D.A.T.A., Inc.
A Cordura Company
9889 Willow Creek Rd.
P.O. Box 26875
San Diego, California 92126
Tel: (714) 578-7600

PUBLISHER
Allen Greer, *Vice President*

EDITORIAL
Frank B. Wahl Jr., *Technical Director of Publications*
David M. Rady, *Managing Editor*
Karen E. Wilcox, *Manufacturers Service Representative*
Rudolph Capman, *Technical Editor*

ENGINEERING EDITORS
William Wright, *Coordinator*
Jean O'Connor
Kerin Klukowski
Janice H. Perley

PRODUCTION EDITORS
Neomia Nipper, *Coordinator*
Sharon Erickson
Sherry L. Gilbert

GRAPHICS EDITORS
Cynthia Wilson, *Coordinator*
Rhonda DeRyckere
Michael Overton

ACCOUNTING
Dale Kostman, *Controller*

FULFILLMENT
Retta Prow, *Manager*

MARKETING
David Valentino, *Marketing Manager*
Karen Detert, *Direct Marketing Coordinator*
Jan Regan, *Marketing Clerk*

CUSTOMER SERVICE
Charlotte Bluestein

ADVERTISING SALES

Home Office: (714) 578-7600 — Heidi Larson, *Direct Sales Coordinator*

Eastern Region: (201) 232-5850 — Geraldine Purdy, P.O. Box 819, Westfield, NJ 07091

D.A.T.A. Inc., is a subsidiary of CORDURA PUBLICATIONS, INC., 9889 Willow Creek Rd., P.O. Box 26260, San Diego, CA 92126
President – Cal Kobrin
Executive Vice President – Richard Harris
Vice President and Publisher – Allen Greer
Vice President, Finance – John Opelt
Vice President, Operations – Malcolm Ferrier
Director of EDP Operations – J.F. Callahan

D.A.T.A.BOOK Electronic Information Series (USPS 559-390) is published 35 times per year in the following sequence: 2 in Jan., 4 in Mar., 2 in Apr., 2 in May, 7 in Jun., 3 in Jul., 1 in Aug., 6 in Sept., 1 in Oct., 1 in Nov., and 6 in Dec., for $833.00 (U.S. Price) by D.A.T.A. Inc., 9889 Willow Creek Rd., P.O. Box 26875, San Diego, CA 92126. Controlled circulation postage paid at Kingsport, TN and San Diego, CA (USPS 559-390).
ISSN - 0195-5853.

POSTMASTER: Send address changes to D.A.T.A. Inc., P.O. Box 26875, San Diego, CA 92126.

COPYRIGHT ©1981 by Derivation and Tabulation Associates, Inc., a Cordura Company, all rights reserved. Reproduction in whole or in part without written permission, is prohibited.

D.A.T.A.BOOK®

VOLUME 26 BOOK 6 MARCH 1981

MEMORY INTEGRATED CIRCUITS

APRIL 1981 THROUGH SEPTEMBER 1981 – EDITION 20
7,221 TYPES, 60 MANUFACTURERS

TABLE OF CONTENTS

HOW-TO-USE INFORMATION
How To Make Maximum Use Of This D.A.T.A.BOOK iii
Use Of Power-Of-Ten Multipliers and Symbols & Codes In The Technical Sections vii
How Type Numbers Are Sequenced In The Type No. Cross Index vii
How Type Numbers Are Arranged In The Technical Sections – Sequencing Parameters viii
D.A.T.A.'s Approach To MSI/SLI Memory Specifications ix

GENERIC PRODUCT INDEX
Generic Types G1-G55

TYPE NO. CROSS INDEX
1. All Types 2

TECHNICAL DATA SECTIONS
2. Read-Write Memories (RAMS) 18
3. Read-Only Memories (ROMS) 46
4. Characters Generators 62
5. (Reserved)
6. Code Converters 64
7. Shift Registers 65
8-19. (Reserved)
20. Special Memory Devices 87
(Including Trigonometric ROMS-ATN,COS,SIN; CAMS; PLAS; Rhythm-Generators;

SUPPLEMENTARY SECTIONS
21. Types With U.S. Military Specifications 89
Commercial-To-Military Type No. Cross Reference
22. Logic/Block Drawings 93
23. Outline Drawings 216
24. Pin Connections 276
25. Manufacturers' Sales Offices 322
26. Manufacturers' Logos 328
27. Manufacturers' Codes, Names & Addresses 330

INTERPRETER – Symbols & Codes Explained SMI-SM4

DISPLAY ADVERTISER
Fujitsu America, Inc ..... Back Cover

EDITORIAL POLICY & PROCEDURES

Purpose

This D.A.T.A.BOOK is designed to report comprehensively on what is presently being produced throughout the world in the field of MSI-LSI Memories. While a book such as this can not provide 100% of the information you might need, its primary aims are those of facilitating the selection of types suitable to your technical requirements, and of directing you to the sources of their manufacture.

Technical Data Acquisition

D.A.T.A. acquires and processes the information presented in this D.A.T.A.BOOK with the cooperation of the participating manufacturers who supply us with their latest technical information. Manufacturers are not charged for the listing of their products.

JEDEC Outlines

At the time this D.A.T.A.BOOK was prepared, there were no JEDEC type numbers; however, some of the devices have the JEDEC-designated MO— and TO— outlines which are included as applicable in the Outline Drawings Section.

Military Type Numbers

The electrical, mechanical and environmental information tabulated for the military types in the technical sections is derived directly from the applicable military specifications and standards. The source information, showing the particular manufacturers qualified for each type, is derived from the QPL (Qualified Parts List) associated with the governing specification, or from the manufacturers Qualification Test Letters.

Substitute Types And Compatibility

This D.A.T.A.BOOK can not truly claim to be an interchangeability chart; however, because of the sequencing arrangement of selected characteristics in the technical sections, types with the same or similar characteristics are grouped together. For purposes of replacement, this means of thorough, convenient technical comparison should prove superior to, and safer than, a mere listing of possible substitute type numbers.

Price And Availability

Because of the rapidly-changing and complex nature of this field, current price and delivery information should be obtained direct from the manufacturers. The list of manufacturers and the Local Offices Section in back of the book will assist you in this.

Manufacturers' Specifications

This book includes currently-manufactured devices and devices soon-to-be available with their major characteristics, drawings and manufacturers. Every effort is made to ensure the accuracy of the entries herein; however, the publisher can not be held responsible nor guarantee against the possibility of error or omission. Only the manufacturers or their authorized representatives can provide you with complete technical details.

HOW TO MAKE MAXIMUM USE OF THIS D.A.T.A.BOOK

Select the particular KNOWN-UNKNOWN situation that applies, and follow the instructions as indicated.

Examples shown here are taken from Edition 14 of the MSI-LSI MEMORY D.A.T.A.BOOK

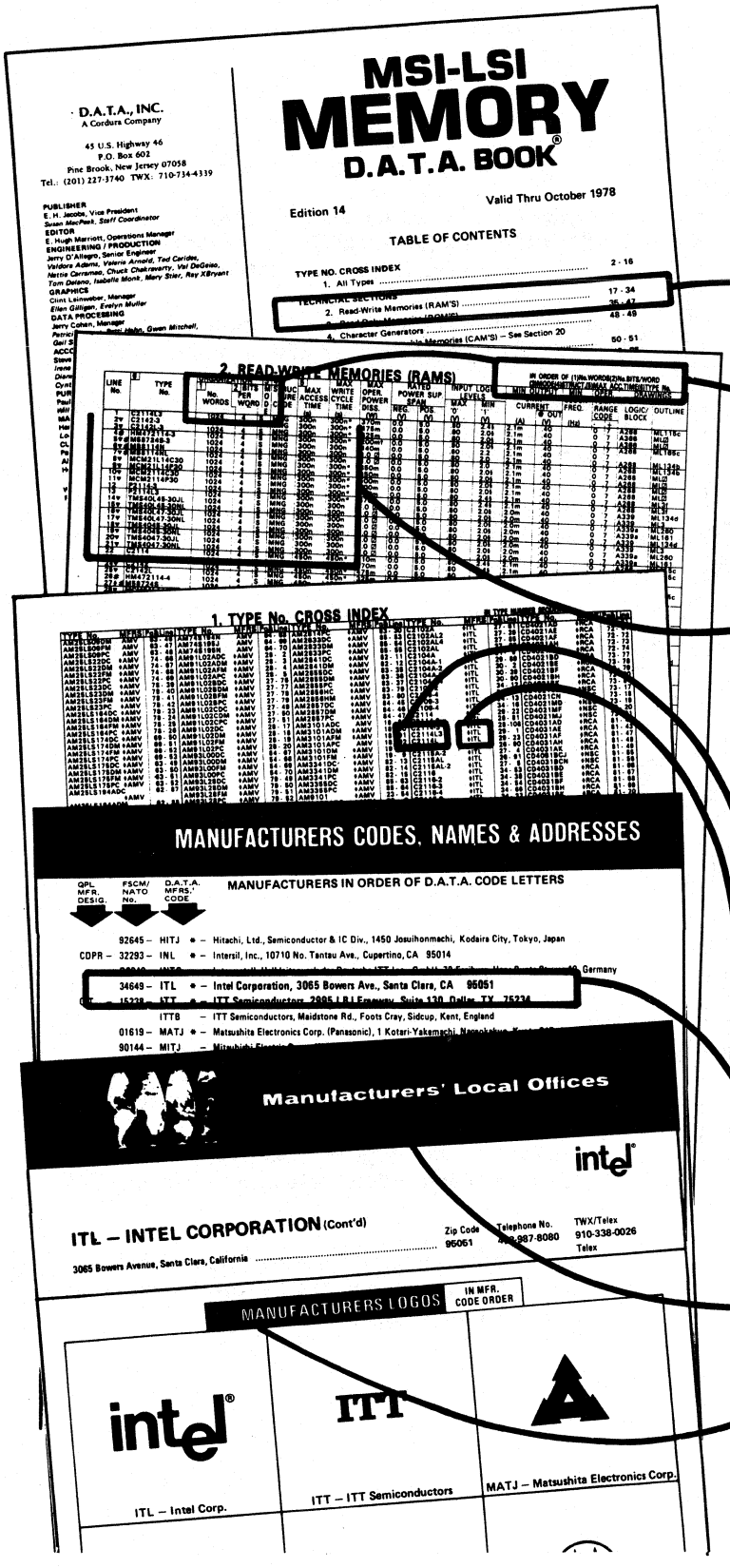

1. KNOWN: Electrical or Mechanical Requirements - RAM, 1024x4, 300 ns Access Time

   UNKNOWN: Suitable Type numbers

   a. Turn to the Table of Contents and select the technical Data Section corresponding to the "known" device type; (Section 2, Read-Write Memories – RAMS).

   b. Turn to any page in the RAM Section. Note the sequencing parameters, i.e., those characteristics for which the data are sequenced (No. WORDS first, No. BITS/WORD second) indicated at the top right corner of the page.

   c. Using the sequencing parameters, locate the type numbers that are in general agreement with your requirements. Because of the sequencing, these types will appear together; 1024x4, 300ns access types are found in this example on lines 1-21. From among these, select the one or ones most suitable.

   d. To identify the manufacturers of the selected type number, follow the procedures outlined in 2.

2. KNOWN: Type Number–C2114L3

   UNKNOWN: Complete Manufacturer Information

   a. In the Type No. Cross Index (Section 1) locate the "known" type number in this alpha-numeric sequenced section. (For example C2114L3)

   b. Note the 3-letter manufacturers' code(s) indicated for the "known" type. (ITL for C2114L3)

   c. Turn to the Manufacturers Codes, Names and Addresses (Section 27) for complete manufacturer information. (For example: ITL)

   d. Turn to the Manufacturers Local Offices (Section 25) where full local office listings are located.

   e. To locate the manufacturer's logo, turn to Section 26.

Continued on next page

HOW TO MAKE MAXIMUM USE OF THIS D.A.T.A.BOOK (Cont'd)

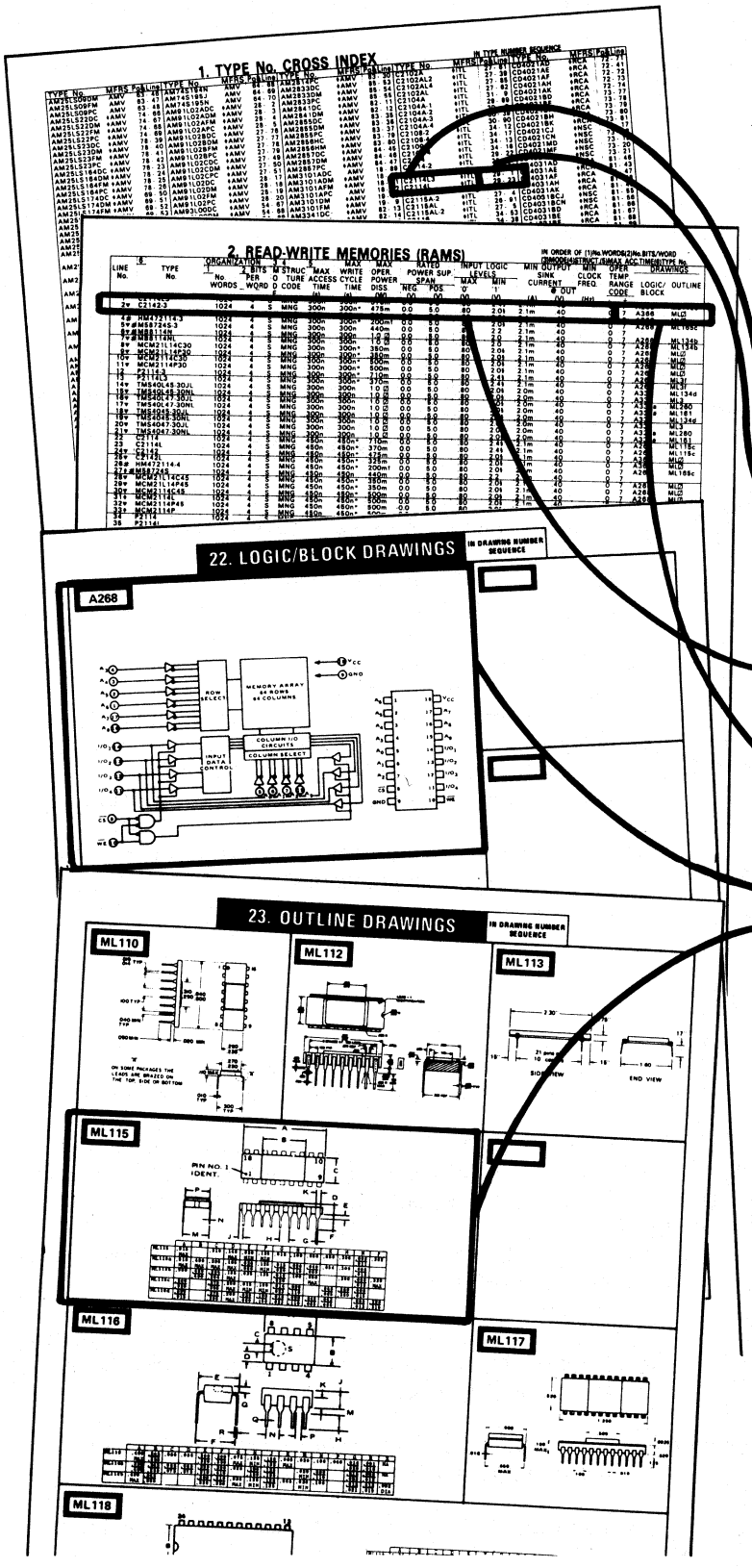

3. KNOWN: Type Number – C2114L3
   UNKNOWN: Its Electrical Characteristics and/or Logic/Block and Outline Drawings

   a. In the Type No. Cross Index (Section 1) locate the "known" type number. (For example: C2114L3)

   b. Note the one Pg. & Line number; i.e., "29-1" alongside the type number. Page 29, Line 1 indiates – Section 2, and locates C2114L3.

   c. In this example the page and line number location provides full electrical characteristics for the "known" type number.

   d. Note the referenced drawing numbers in the last two columns: "Logic Block." (For example: A268 for C2114L3) and "Outline" (For example: ML115c for C2114L3).

   e. Turn to the Logic/Block Drawings (Section 22) and Outline Drawings (Section 23) and locate the referenced drawings for your type number.

4. KNOWN: Type Number – C2114L3
   UNKNOWN: Equivalent Types For Replacement

   a. Locate "known" type number in Cross Index (Section 1) and follow same procedures outlined in 3.

   b. Survey the type numbers with similar electrical parameters surrounding the "known" number to determine the suitable alternatives.

Continued on next page

HOW TO MAKE MAXIMUM USE OF THIS D.A.T.A.BOOK (Cont'd)

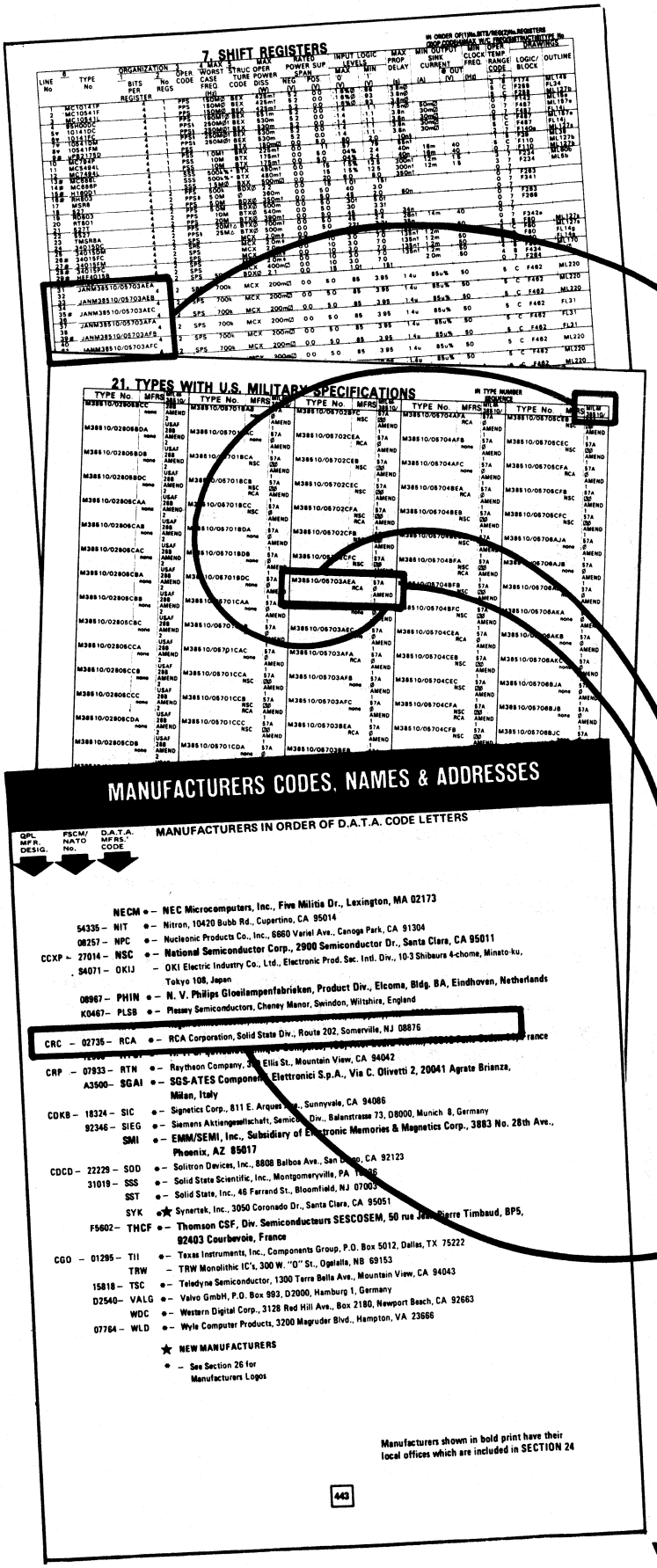

7. SHIFT REGISTERS

21. TYPES WITH U.S. MILITARY SPECIFICATIONS

MANUFACTURERS CODES, NAMES & ADDRESSES

MANUFACTURERS IN ORDER OF D.A.T.A. CODE LETTERS

QPL MFR. DESIG. | FSCM/ NATO No. | D.A.T.A. MFRS.' CODE

NECM ● – NEC Microcomputers, Inc., Five Militia Dr., Lexington, MA 02173

54335 – NIT ● – Nitron, 10420 Bubb Rd., Cupertino, CA 95014

08257 – NPC ● – Nucleonic Products Co., Inc., 6860 Variel Ave., Canoga Park, CA 91304

CCXP – 27014 – NSC ● – **National Semiconductor Corp., 2900 Semiconductor Dr., Santa Clara, CA 95011**

S4071 – OKIJ – OKI Electric Industry Co., Ltd., Electronic Prod. Sec. Intl. Div., 10-3 Shibaura 4-chome, Minato-ku, Tokyo 108, Japan

08967 – PHIN ● – N. V. Philips Gloeilampenfabrieken, Product Div., Elcoma, Bldg. BA, Eindhoven, Netherlands

K0467 – PLSB ● – Plessey Semiconductors, Cheney Manor, Swindon, Wiltshire, England

CRC – 02735 – RCA ● – RCA Corporation, Solid State Div., Route 202, Somerville, NJ 08876

CRP – 07933 – RTN ● – Raythe[illegible] Ellis St., Mountain View, CA 94042

A3500 – SGAI ● – SGS-ATES Componenti Elettronici S.p.A., Via C. Olivetti 2, 20041 Agrate Brianza, Milan, Italy

CDKB – 18324 – SIC ● – Signetics Corp., 811 E. Arques [illegible], Sunnyvale, CA 94086

92346 – SIEG ● – Siemens Aktiengesellschaft, Semic[illegible] Div., Balanstrasse 73, D8000, Munich 8, Germany

SMI ● – EMM/SEMI, Inc., Subsidiary of Electronic Memories & Magnetics Corp., 3883 No. 28th Ave., Phoenix, AZ 85017

CDCD – 22229 – SOD ● – Solitron Devices, Inc., 8808 Balboa Ave., San Diego, CA 92123

31019 – SSS ● – Solid State Scientific, Inc., Montgomeryville, PA [illegible]

SST ● – Solid State, Inc., 46 Farrand St., Bloomfield, NJ 07003

SYK ★ – Synertek, Inc., 3050 Coronado Dr., Santa Clara, CA 95051

F5602 – THCF ● – Thomson CSF, Div. Semiconducteurs SESCOSEM, 50 rue Jean Pierre Timbaud, BP5, 92403 Courbevoie, France

CGO – 01295 – TII ● – Texas Instruments, Inc., Components Group, P.O. Box 5012, Dallas, TX 75222

TRW – TRW Monolithic IC's, 300 W. "O" St., Ogallala, NB 69153

15818 – TSC ● – Teledyne Semiconductor, 1300 Terra Bella Ave., Mountain View, CA 94043

D2540 – VALG ● – Valvo GmbH, P.O. Box 993, D2000, Hamburg 1, Germany

WDC ● – Western Digital Corp., 3128 Red Hill Ave., Box 2180, Newport Beach, CA 92663

07764 – WLD ● – Wyle Computer Products, 3200 Magruder Blvd., Hampton, VA 23666

★ NEW MANUFACTURERS

● – See Section 26 for Manufacturers Logos

Manufacturers shown in bold print have their local offices which are included in SECTION 24

443

5. KNOWN: Military Electrical or Mechanical Requirements - Shift Register, 4 Bits Per Register, 2 Registers, Static Serial to Parallel, 700kHz Freq.
UNKNOWN: Suitable Type Numbers

a. Turn to the Table of Contents and select the Technical Data Section corresponding to the "known" device; (Section 7, Shift Registers). To determine the general type numbers that meet the military electrical or mechanical requirements, follow the same procedures outlined in 1. From among these, select the military types by means of the identifying prefix "JAN". (For example: JAN M38510/05703 AEA).

b. To identify the manufacturers, follow the procedures outlined in 6.

6. KNOWN: Military Type Number — JAN M38510/05703AEA
UNKNOWN: Qualified Manufacturers and/or Applicable Military Specification

a. Turn to Section 21 "Types With U.S. Military Specifications" and locate the "known" type number in this alpha-numeric sequenced section. (For example: JAN M38510/05703AEA)

b. Note the manufacturers' code(s) and detail specification listed next to the type number. The general specification indicated on the top column headings and the detail specification next to the manufacturer's code make up the complete military specification for the "known" type number. (For example: Mfr. - RCA, MIL–M–38510/57A ϕ, AMEND 1)

c. Use the listing of Manufacturers Codes, Names & Addresses (Section 27) to identify the manufacturer(s) and obtain complete manufacturer information. (For example: RCA).

Continued on next page

HOW TO MAKE MAXIMUM USE OF THIS D.A.T.A.BOOK (Cont'd)

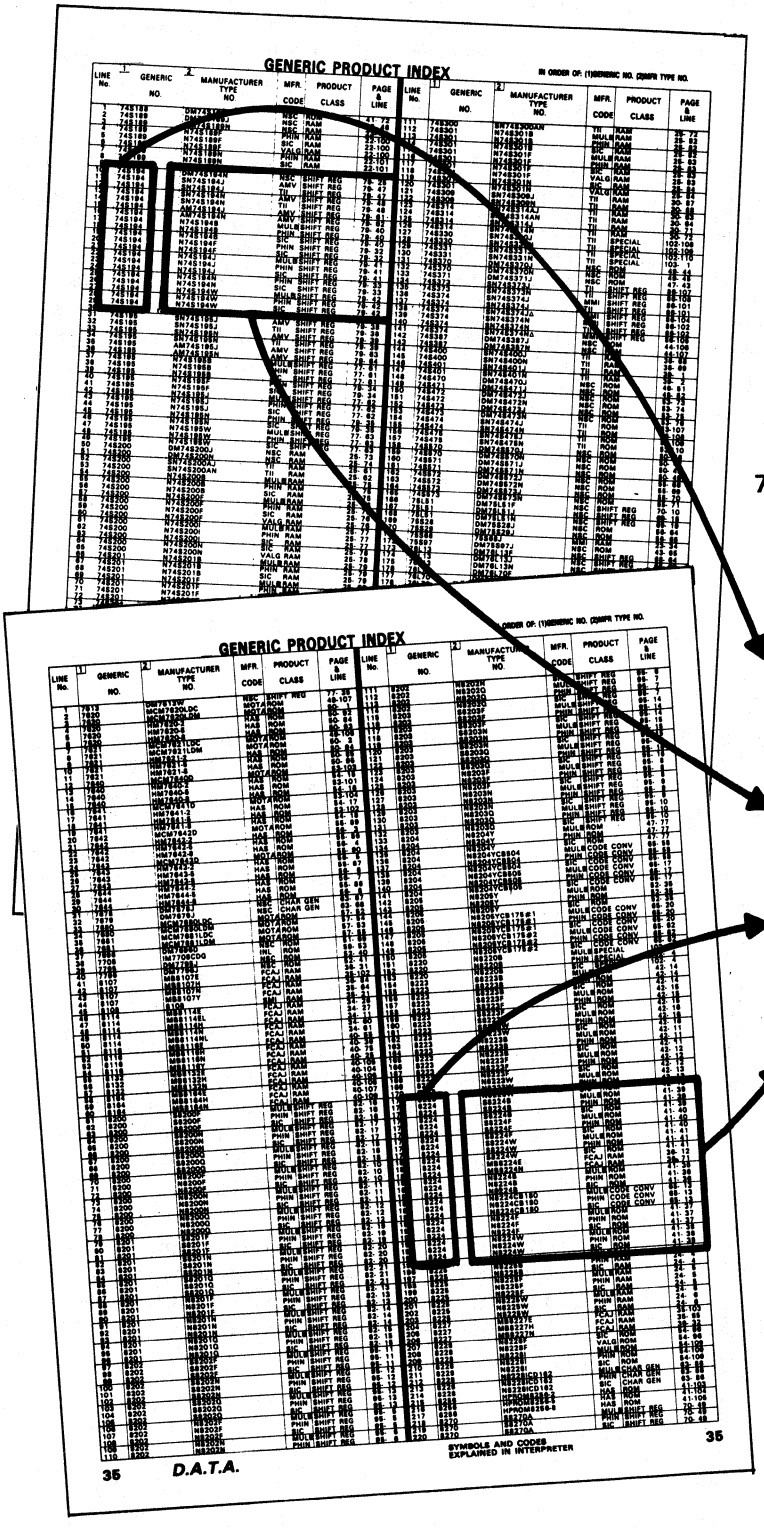

7. KNOWN: Common (Generic) Device Number (74S194, 8224)
   UNKNOWN: Available Manufacturers, Individual Type Numbers and Product Class

a. Turn to the Generic Product Index.

b. In the Generic No. column locate the "known" device number. (For example 74S194)

c. Note the Manufacturer Type Nos., the Manufacturer Code(s) and the Product Class for 74S194; all devices are Shift Registers. Full technical detail is given on the Page & Line Nos. indicated.

d. In the Generic No. column locate the "known" device number. (For example 8224)

e. Note the Manufacturer Type Nos., Manufacturer Code(s) and Product Classes for the 8224; categories in the Product Class column include RAMs, ROMs, and Code Converters. Full technical detail is given on the Page & Lines Nos. indicated.

USE OF POWERS-OF-TEN MULTIPLIERS AND SYMBOLS & CODES IN THE TECHNICAL SECTIONS

To present a maximum amount of information in a minimum amount of space, use is made in this book of the following data modifiers:

POWERS-OF-TEN MULTIPLIERS

The powers-of-ten multipliers shown below are used in numeric columns when the value being entered is many times greater or smaller than the units of measure indicated in the column heading. Usually, the latter are the so-called 'basic' units; such as V (volts), A (amperes) and s (seconds). The multipliers and an explanation of their use are given below:

MULTIPLIERS

PREFIXES & SYMBOLS Recommended by International Committee on Weights and Measures

Indicating Powers of Ten Adopted by National Bureau of Standards

Power	Prefix	Symbol	Power	Prefix	Symbol	Power	Prefix	Symbol
10^{12}	tera	T	10	deka	da	10^{-9}	nano	n
10^{9}	giga	G	10^{-1}	deci	d	10^{-12}	pico	p
10^{6}	mega	M	10^{-2}	centi	c	10^{-15}	femto	f
10^{3}	kilo	k	10^{-3}	milli	m	10^{-18}	atto	a
10^{2}	hecto	h	10^{-6}	micro	μ			

EXPLANATION

Value of Data To Be Entered	Basic Unit In Column Heading	Actual Entry
3 milliamperes	A (amperes)	3.0m
9 megaohms	Ω (ohms)	9.0M
0.5 volt	V (volts)	500m *
10 amperes	A (amperes)	10

* May also be written as 0.5, with no multiplier

SYMBOLS & CODES

Symbols – Symbols such as #, △, and $ are used in all columns, numeric or otherwise, whenever the data entries differ in some way from the entity defined in the column heading. For instance, if a given heading specifies Max. Power (in Watts) and the numeric value being entered for a given type represents the minimum power instead, the variance is denoted by the appearance of a special symbol alongside the numeric entry.

NOTE: The symbols and codes used herein are explained on the cards in back of the book.

Codes – Codes are used in some columns as means to abbreviate the data being entered. The codes may be alphabetic (A,B,C, etc.) numeric (1,2,3, etc.) or some combination of both.

HOW TYPE NUMBERS ARE SEQUENCED IN THE TYPE NUMBER CROSS INDEX

Sequencing of type numbers in the Type Number Cross-Index is governed by the following rules:

	EXAMPLES
Rules: 1) Type numbers are listed in numeric-alphabetic sequence; i.e., type numbers beginning with a number (decimal, fraction, or whole) precede type numbers beginning with a letter.	13A01 143 1202 A147 AN127 B2000
2) Decimals and fractions precede whole numbers. An equivalent decimal precedes the fraction when the remainder of type number is identical.	.25Z150 1/4Z150 3/4M12Z 1T3
3) Zeros are ignored in sequencing except when the zero is the only basis for distinguishing one type number from another. In this case the type number containing the zero is listed first.	0112 112 0113 00115 AP01 AP1 AP02
4) Number and/or letter groupings preceding hyphens or slashes are the controlling factors in sequencing. The hyphens and slashes themselves precede any identically positioned letters also having the same beginning number/letter groupings.	66-0706 66M1 70/10 70A9

HOW TYPE NOS. ARE ARRANGED IN THE TECHNICAL SECTION – SEQUENCING PARAMETERS

The arrangement of types in the technical sections is keyed to a set of special characteristics selected for their importance from among the general group of characteristics tabulated in each section. These selected characteristics, or sequencing parameters, differ from one section to another, and are identified at the top corner of each page, as shown in the sample below.

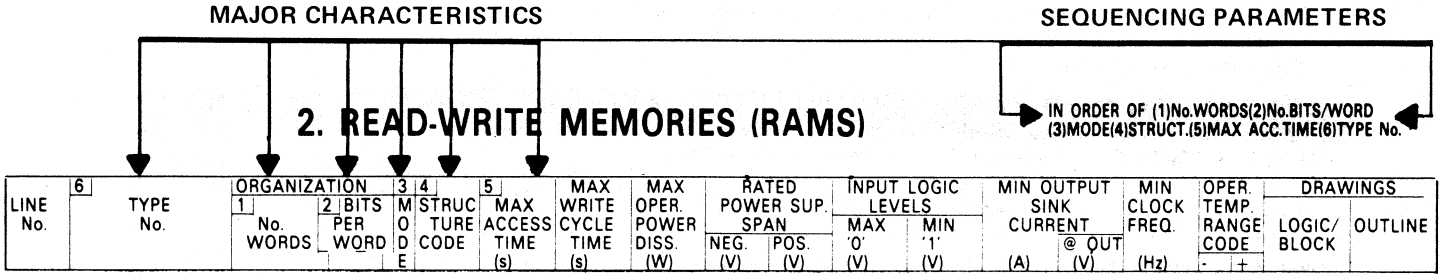

The different types within a section are first arranged in ascending numeric (or alphabetic) order of the first such parameter. Groups of types having a common value for the first parameter are then arranged in ascending order of the second parameter. This process continues for each parameter in turn, up to and including the last parameter which, in every instance, is the type number itself. The final arrangement, by type number, is done in accordance with the sequencing of type numbers in the cross-index, as explained on the preceding page.

A simplified model of the arrangement as described is shown below.

4 Type Number	Characteristics 1 A	2 B	C	3 D
A13	100		325	
A4	100		1000	20
A9	100	A	20	25
A10	100	A	200	25
A3	100	B	40	15
A1	100	C	80	10
A8	100	C	900	15
A7	100	D	35	30
A11	110	A	60	25
A2	120	A	300	15
A5	120	B	150	20
A6	120	B	200	20
A12	120	B	475	25
	Last Seq. Par.	1st Seq. Par.	2nd Seq. Par.	(Not Seq.)	3rd Seq. Par.

Note that the absence of an entry for any sequencing parameter is regarded as a zero, and precedes any actual entries in the sequencing.

D.A.T.A.'S APPROACH TO MSI/LSI MEMORY SPECIFICATIONS

- Access Time (Sect. 2,3,4,5,6) – the speed at which a device can read-out information from its memory. It is defined as the time difference between the addressing of the memory and the appearance of a valid output.

- Clock Freq. (Sect 2,3,7) – is given for dynamic devices for the reason explained under "modes". For static devices it is assumed to be dc. In Section 3 it is specified in the Description column when applicable.

- Conversion Code: "From" and "To" (Sect. 6)– indicates the input and output codes of the device. Those devices having reversible code capability are listed twice, once for each direction change.

- Input Logic Levels (All sections) – the max. input voltage at which the input is in the "off" or "0" state, and the min. input voltage at which the input is in the "on" or "1" state. The difference between the two input levels indicates the relative noise immunity of the device. For cases where the input logic levels are not specified, the output levels are, and a symbol is used to indicate this condition.

  The input logic levels apply to the address inputs for the "memory" devices in Sections 2 to 6, and to the data inputs for shift registers in Section 7. If the device can be adjusted for compatibility with both MOS and Bipolar systems, then Bipolar levels are specified in the column. A symbol is used to indicate this condition.

- Logic/Block Drawings (All sections) – separated and coded according to functional classification, i.e., RAM's, ROM's, etc. The block drawing was considered more descriptive than the circuit schematic in showing the overall operation of the device from a system aspect.

- Mode: Static or Dynamic (Sect. 2 and 5) – represents the basic storage method of the device. Static types use flip-flops that retain their state indefinitely as long as the supply voltage is maintained. Their frequency of operation extends down to dc.. Dynamic types use the inherent interelectrode capacitance of MOS devices to store a charge which determines the state of a memory bit. Since this charge cannot be held indefinitely, these types must be refreshed periodically; this restricts the lower limit of their operating frequency.

- No. of Bits Per Character (Sect. 4) – the number of bits in the display matrix, obtained by multiplying the number of rows in the display matrix times the number of columns. The number provides a measure of the resolution of the display.

- No. of Bits Per Register (Sect. 7) – the bit capacity of the individual registers which can be used separately in the device. If the number of bits varies for the different registers, then the highest capacity is specified, and the user is referred to the logic/block drawing for more specific information.

- No. of Characters (Sect 4) – the character capacity of the device. For a standard code with a given number of characters such as ASCII, the input code for any character is fixed. Some devices must be used in pairs to supply the complete code, in which case a symbol is used in the technical section column.

- No. of Code Inputs and Outputs (Sect. 6) – determines the code input and output character capacity.

- No. of Outputs (Sect. 4) – indicates the number of outputs to the display. For row-and-column-scanning devices, the array of the display matrix is easily determined by dividing this number into the number of bits per character.

- No. of Registers (Sect. 7) – together with the number of bits/register determine the total bit capacity of the device. Some registers contain inputs to intermediate stages; this is noted with a symbol.

- Oper. Mode and Prog. Code (Sect 3) – describes: 1)the mode of operation of the device (dynamic or static); and 2)the type of program available (standard or custom). If a standard program is indicated in the Code, it is defined in the technical section Description column.

- Operating Power Diss. (All sections) – the "worst-case" power dissipation of the device under operating conditions. A manufacturer may indicate the "quiescent" or the "absolute maximum" power dissipations; these values vary significantly from "worst case". For this reason the user is cautioned not to use the quiescent or absolute maximum power dissipation in comparing the operating power dissipation of different devices. All conditions other than "worst case" are distinguished by the use of a symbol following the value.

D.A.T.A.'S APPROACH TO MSI/LSI MEMORY SPECIFICATIONS (Cont'd)

- Oper. Temp. Range Code (All sections) – the temperature range over which the manufacturer indicates that the device will operate. Unless otherwise noted by a symbol in the appropriate column or columns, all specified characteristics apply over the operating temperature range of the device.

- Organization: No. of Words and No. Bits/Word (Sect. 2,3,5) – represents the capacity of the memory. By connecting the outputs of two or more devices in parallel, the total number of words may be expanded; similarly, by connecting the address inputs in parallel, the number of bits/word can be expanded.

- Outline Drawings (All sections) – separated and coded in the Outline Drawing Section according to package configuration. In this way the user can easily determine the types of package and the associated dimensions available for memory circuits.

- Output Sink Current (All sections) –negative current that the output of a device can sink at a specified "0" level. This is especially important in determining a device's compatibility to Bipolar circuits. Where the sink current is not specified or not applicable, an alternate output current characteristic is specified, and is identified by an appropriate symbol.

- Propagation Delay (Sect. 7) – the time required to shift information one bit through the register. It is defined as the time between the initiating clock pulse at the input of a storage element, to the occurrence of a valid output from the same element.

- Rated Power Supply Span (All sections) – the range of positive and negative supply voltages at which the characteristics are specified by the manufacturer. If more than one negative or positive voltage is necessary for the operation of the device, the maximum negative or positive value is specified. The logic/block drawing should then be consulted for the actual voltages required to operate the device.

- Search Time (Sect. 5) – the time required to match information in the memory once a search is initiated. It is defined as the time difference between the enabling of the associate control input and the receiving of a mismatch or match condition at the output.

- Structure Code (All sections) – relates the device to the two main developing semiconductor technologies for memory devices: Bipolar and MOS. Presently, the two technologies are characterised by distinctive advantages and disadvantages in comparison to each other. Generally, Bipolar devices are faster, but MOS devices dissipate less power. A third technology, thin film amorphous, features non-volatile and non-destructive crystalline memory bits.

- Use Code (Sect. 4) – describes 1) the mode of operation of the device (dynamic or static); 2)the type of code stored in the device; and 3)the type of display used with the device. Knowing these three characteristics greatly narrows the search for a character generator.

- Use Code (Sect. 7) – describes 1)the type (serial or parallel) of input and output terminals available on the device; and 2)the operating mode of the device (static or dynamic). For devices that operate in both the serial and parallel modes on the input and/or output, the parallel capability is specified, since parallel devices can operate in both, the serial and parallel modes.

- Worst Case Operating Frequency (Sect. 7) – the highest guaranteed operating frequency of the device. Alternatively, the data-rate frequency is specified in the case where it differs from the clock frequency.

- Write-Cycle Time (Sect. 2,5) – the time required to write a data-word into a given memory address. The max. read-write time is similarly defined, except that it includes both the read and write portions of the cycle. The min. write-pulse width is specified in the column when the cycle times are not given. It is defined as the min. pulse width required at the write input to insure that valid information is stored at the memory address.

GENERIC PRODUCT INDEX

In Order Of "Generic" Type Number

G1

GENERIC PRODUCT INDEX

IN ORDER OF: (1)GENERIC NO. (2)MFR TYPE NO.

LINE No.	1 GENERIC NO.	2 MANUFACTURER TYPE NO.	MFR. CODE	PRODUCT CLASS	PAGE & LINE
1	01	MCH-01	MATC	CHAR GEN	62- 96
2	1	MEM-1B	WLD	RAM	27- 90
3	1	MM1-PROM	CLI	ROM	58-102
4	1	MM1-RAM	CLI	RAM	33- 61
5	1J16	5300-1J16	MMI	ROM	48- 33
6	1J16	5301-1J16	MMI	ROM	48- 34
7	1J16	5305-1J16	MMI	ROM	50- 50
8	1J16	5306-1J16	MMI	ROM	50- 51
9	1J16	5330-1J16	MMI	ROM	46- 75
10	1J16	5331-1J16	MMI	ROM	46- 76
11	1J16	6300-1J16	MMI	ROM	48- 17
12	1J16	6301-1J16	MMI	ROM	48- 18
13	1J16	6305-1J16	MMI	ROM	50- 33
14	1J16	6306-1J16	MMI	ROM	50- 34
15	1J16	6330-1J16	MMI	ROM	46- 56
16	1J16	6331-1J16	MMI	ROM	46- 58
17	1J18	5350-1J18	MMI	ROM	53- 67
18	1J18	5351-1J18	MMI	ROM	53- 68
19	1J18	5352-1J18	MMI	ROM	53- 69
20	1J18	5353-1J18	MMI	ROM	53- 70
21	1J18	6350-1J18	MMI	ROM	53- 47
22	1J18	6351-1J18	MMI	ROM	53- 48
23	1J18	6352-1J18	MMI	ROM	53- 50
24	1J18	6353-1J18	MMI	ROM	53- 52
25	1J20	5308-1J20	MMI	ROM	49- 41
26	1J20	5309-1J20	MMI	ROM	49- 42
27	1J20	5348-1J20	MMI	ROM	52- 54
28	1J20	5349-1J20	MMI	ROM	52- 55
29	1J20	6308-1J20	MMI	ROM	49- 35
30	1J20	6309-1J20	MMI	ROM	49- 37
31	1J20	6348-1J20	MMI	ROM	52- 30
32	1J20	6349-1J20	MMI	ROM	52- 31
33	1J24	5255-1J24	MMI	ROM	56- 57
34	1J24	5256-1J24	MMI	ROM	56- 58
35	1J24	5260-1J24	MMI	ROM	56- 52
36	1J24	5261-1J24	MMI	ROM	56- 53
37	1J24	5275-1J24	MMI	ROM	58- 89
38	1J24	5276-1J24	MMI	ROM	58- 90
39	1J24	5280-1J24	MMI	ROM	55- 73
40	1J24	5281-1J24	MMI	ROM	55- 74
41	1J24	5282-1J24	MMI	ROM	55- 64
42	1J24	5283-1J24	MMI	ROM	55- 65
43	1J24	5340-1J24	MMI	ROM	52- 52
44	1J24	5341-1J24	MMI	ROM	52- 53
45	1J24	5380-1J24	MMI	ROM	55- 71
46	1J24	5381-1J24	MMI	ROM	55- 72
47	1J24	6255-1J24	MMI	ROM	56- 55
48	1J24	6256-1J24	MMI	ROM	56- 56
49	1J24	6260-1J24	MMI	ROM	56- 50
50	1J24	6261-1J24	MMI	ROM	56- 51
51	1J24	6275-1J24	MMI	ROM	58- 91
52	1J24	6276-1J24	MMI	ROM	58- 92
53	1J24	6280-1J24	MMI	ROM	55- 66
54	1J24	6281-1J24	MMI	ROM	55- 67
55	1J24	6282-1J24	MMI	ROM	55- 68
56	1J24	6283-1J24	MMI	ROM	55- 69
57	1J24	6335-1J24	MMI	ROM	49- 39
58	1J24	6336-1J24	MMI	ROM	49- 40
59	1J24	6340-1J24	MMI	ROM	52- 28
60	1J24	6341-1J24	MMI	ROM	52- 29
61	1J24	6380-1J24	MMI	ROM	55- 59
62	2	MEM-2	WLD	RAM	27- 91
63	2J24	5280-2J24	MMI	ROM	55- 48
64	2J24	5281-2J24	MMI	ROM	55- 49
65	2J24	6280-2J24	MMI	ROM	55- 29
66	2J24	6281-2J24	MMI	ROM	55- 30
67	3	MEM-3	WLD	RAM	38- 24
68	4	MSR4	WLD	SHIFT REG	66- 34
69	4	TMSR4A	WLD	SHIFT REG	70- 36
70	5	MUF5	WLD	SHIFT REG	75- 70
71	5	M5G1400P	MITJ	ROM	47- 31
72	5K4116	M5K4116P-2	MITJ	RAM	43- 77
73	5K4116	M5K4116P-3	MITJ	RAM	44- 5
74	5K4116	M5K4116S-2	MITJ	RAM	43- 78
75	5K4116	M5K4116S-3	MITJ	RAM	44- 6
76	5K4116	M5K4116S4	MITJ	RAM	44- 48
77	5K4164	M5K4164S-15	MITJ	RAM	45- 36
78	5K4164	M5K4164S-20	MITJ	RAM	45- 44
79	5L2101	M5L2101AP	MITJ	RAM	26- 22
80	5L2101	M5L2101AP-4	MITJ	RAM	26- 44
81	5L2101	M5L2101AP2	MITJ	RAM	26- 1
82	5L2101	M5L2101AS	MITJ	RAM	26- 23
83	5L2101	M5L2101AS2	MITJ	RAM	26- 2
84	5L2101	M5L2101AS4	MITJ	RAM	26- 45
85	5L2102	M5L2102AP-4	MITJ	RAM	32- 12
86	5L2102	M5L2102AS-4	MITJ	RAM	32- 13
87	5L2111	M5L2111AP	MITJ	RAM	26- 24
88	5L2111	M5L2111AP-4	MITJ	RAM	26- 46
89	5L2111	M5L2111AP2	MITJ	RAM	26- 3
90	5L2111	M5L2111AS	MITJ	RAM	26- 25
91	5L2111	M5L2111AS2	MITJ	RAM	26- 4
92	5L2111	M5L2111AS4	MITJ	RAM	26- 47
93	5L2112	M5L2112AP	MITJ	RAM	26- 26
94	5L2112	M5L2112AP-4	MITJ	RAM	26- 48
95	5L2112	M5L2112AP2	MITJ	RAM	26- 5
96	5L2112	M5L2112AS	MITJ	RAM	26- 27
97	5L2112	M5L2112AS2	MITJ	RAM	26- 6
98	5L2112	M5L2112AS4	MITJ	RAM	26- 49
99	5L2114	M5L2114LP	MITJ	RAM	35- 81
100	5L2114	M5L2114LP-2	MITJ	RAM	34- 16
101	5L2114	M5L2114LP-3	MITJ	RAM	35- 4
102	5L2114	M5L2114LS	MITJ	RAM	35- 82
103	5L2114	M5L2114LS-2	MITJ	RAM	34- 17
104	5L2114	M5L2114LS-3	MITJ	RAM	35- 5
105	5L2708	M5L2708K	MITJ	ROM	54- 19
106	5L2708	M5L2708K85	MITJ	ROM	54- 20
107	5L2708	M5L2708S	MITJ	ROM	56- 22
108	5L2708	M5L2708S-65	MITJ	ROM	56- 43
109	5L2716	M5L2716K	MITJ	ROM	57- 26
110	5L2716	M5L2716K-65	MITJ	ROM	57- 27

LINE No.	1 GENERIC NO.	2 MANUFACTURER TYPE NO.	MFR. CODE	PRODUCT CLASS	PAGE & LINE
111	5L2732	M5L2732K	MITJ	ROM	60- 45
112	5L2732	M5L2732K-6	MITJ	ROM	59- 47
113	5L5101	M5L5101LP-1	MITJ	RAM	25- 35
114	5T4044	M5T4044P-20	MITJ	RAM	41- 2
115	5T4044	M5T4044P-30	MITJ	RAM	41- 52
116	5T4044	M5T4044P-45	MITJ	RAM	41- 85
117	5T4044	M5T4044S-20	MITJ	RAM	41- 3
118	5T4044	M5T4044S-30	MITJ	RAM	41- 53
119	5T4044	M5T4044S-45	MITJ	RAM	41- 86
120	6	MEM-6	WLD	RAM	27- 92
121	6	AMU6B930051X	AMD	SHIFT REG	69- 72
122	6	AMU6B930059X	AMD	SHIFT REG	69- 73
123	7	SL7-C2100-30	GIC	SHIFT REG	85- 17
124	8	MGF8	WLD	SHIFT REG	76- 95
125	8	MSR8	WLD	SHIFT REG	73- 66
126	8	TMSR8	WLD	SHIFT REG	82- 60
127	8	TMSR8A	WLD	SHIFT REG	73- 69
128	8X350	N8X350F	PHIN	RAM	27- 69
129	8X350	N8X350F	SIC	RAM	27- 69
130	8X350	S8X350F	PHIN	RAM	27- 70
131	8X350	S8X350F	SIC	RAM	27- 70
132	9LS95	9LS95DC	FSC	SHIFT REG	72- 2
133	9LS95	9LS95DM	FSC	SHIFT REG	72- 3
134	9LS95	9LS95FC	FSC	SHIFT REG	72- 4
135	9LS95	9LS95FM	FSC	SHIFT REG	72- 5
136	9LS95	9LS95PC	FSC	SHIFT REG	72- 6
137	9LS164	9LS164DC	FSC	SHIFT REG	78- 80
138	9LS164	9LS164DM	FSC	SHIFT REG	78- 81
139	9LS164	9LS164FC	FSC	SHIFT REG	78- 82
140	9LS164	9LS164FM	FSC	SHIFT REG	78- 83
141	9LS164	9LS164PC	FSC	SHIFT REG	78- 84
142	9LS170	9LS170DC	FSC	RAM	18- 35
143	9LS170	9LS170DM	FSC	RAM	18- 36
144	9LS170	9LS170FC	FSC	RAM	18- 37
145	9LS170	9LS170FM	FSC	RAM	18- 38
146	9LS170	9LS170PC	FSC	RAM	18- 39
147	9LS174	9LS174DC	FSC	SHIFT REG	76- 74
148	9LS174	9LS174DM	FSC	SHIFT REG	76- 75
149	9LS174	9LS174FC	FSC	SHIFT REG	76- 76
150	9LS174	9LS174FM	FSC	SHIFT REG	76- 77
151	9LS174	9LS174PC	FSC	SHIFT REG	76- 78
152	9LS175	9LS175DC	FSC	SHIFT REG	72- 57
153	9LS175	9LS175DM	FSC	SHIFT REG	72- 58
154	9LS175	9LS175FC	FSC	SHIFT REG	72- 59
155	9LS175	9LS175FM	FSC	SHIFT REG	72- 60
156	9LS175	9LS175PC	FSC	SHIFT REG	72- 61
157	9LS194	9LS194DC	FSC	SHIFT REG	72- 7
158	9LS194	9LS194DM	FSC	SHIFT REG	72- 8
159	9LS194	9LS194FC	FSC	SHIFT REG	72- 9
160	9LS194	9LS194FM	FSC	SHIFT REG	72- 10
161	9LS194	9LS194PC	FSC	SHIFT REG	72- 11
162	9LS195	9LS195DC	FSC	SHIFT REG	72- 12
163	9LS195	9LS195DM	FSC	SHIFT REG	72- 13
164	9LS195	9LS195FC	FSC	SHIFT REG	72- 14
165	9LS195	9LS195FM	FSC	SHIFT REG	72- 15
166	9LS195	9LS195PC	FSC	SHIFT REG	72- 16
167	9LS295	9LS295DC	FSC	SHIFT REG	72- 35
168	9LS295	9LS295DM	FSC	SHIFT REG	72- 36
169	9LS295	9LS295FC	FSC	SHIFT REG	72- 37
170	9LS295	9LS295FM	FSC	SHIFT REG	72- 38
171	9LS295	9LS295PC	FSC	SHIFT REG	72- 39
172	9LS670	9LS670DC	FSC	RAM	18- 40
173	9LS670	9LS670DM	FSC	RAM	18- 41
174	9LS670	9LS670FC	FSC	RAM	18- 42
175	9LS670	9LS670FM	FSC	RAM	18- 43
176	9LS670	9LS670PC	FSC	RAM	18- 44
177	10	PAL10H8CJ	MMI	SPECIAL	87- 49
178	10	PAL10H8MJ	MMI	SPECIAL	87- 50
179	10	PAL10L8CJ	MMI	SPECIAL	87- 51
180	10	PAL10L8MJ	MMI	SPECIAL	87- 52
181	12	PAL12H6CJ	MMI	SPECIAL	87- 57
182	12	PAL12H6MJ	MMI	SPECIAL	87- 58
183	12	PAL12L6CJ	MMI	SPECIAL	87- 59
184	12	PAL12L6MJ	MMI	SPECIAL	87- 60
185	14	PAL14H4CJ	MMI	SPECIAL	87- 53
186	14	PAL14H4MJ	MMI	SPECIAL	87- 54
187	14	PAL14L4CJ	MMI	SPECIAL	87- 55
188	14	PAL14L4MJ	MMI	SPECIAL	87- 56
189	14	TBP14SA10J	TII	ROM	47- 53
190	14	TBP14SA10N	TII	ROM	47- 54
191	14S10	TBP14S10J	TII	ROM	47- 51
192	14S10	TBP14S10MJ	TII	ROM	47- 55
193	14S10	TBP14S10N	TII	ROM	47- 52
194	15	RM15	ECV	ROM	46- 7
195	15	RM15Y	ECV	ROM	46- 9
196	16	PAL16A4CJ	MMI	SPECIAL	87- 65
197	16	PAL16A4MJ	MMI	SPECIAL	87- 66
198	16	PAL16C1CJ	MMI	SPECIAL	87- 77
199	16	PAL16C1MJ	MMI	SPECIAL	87- 78
200	16	PAL16H2CJ	MMI	SPECIAL	87- 61
201	16	PAL16H2MJ	MMI	SPECIAL	87- 62
202	16	PAL16L2CJ	MMI	SPECIAL	87- 63
203	16	PAL16L2MJ	MMI	SPECIAL	87- 64
204	16	PAL16L8CJ	MMI	SPECIAL	87- 73
205	16	PAL16L8MJ	MMI	SPECIAL	87- 74
206	16	PAL16R4CJ	MMI	SPECIAL	87- 67
207	16	PAL16R4MJ	MMI	SPECIAL	87- 68
208	16	PAL16R6CJ	MMI	SPECIAL	87- 71
209	16	PAL16R6MJ	MMI	SPECIAL	87- 72
210	16	PAL16R8CJ	MMI	SPECIAL	87- 75
211	16	PAL16R8MJ	MMI	SPECIAL	87- 76
212	16	PAL16X4CJ	MMI	SPECIAL	87- 69
213	16	PAL16X4MJ	MMI	SPECIAL	87- 70
214	16	TMSR16	WLD	SHIFT REG	82- 92
215	16	F16K2DC	FSC	RAM	43- 72
216	16	F16K3DC	FSC	RAM	43-108
217	16	F16K4DC	FSC	RAM	44- 41
218	16	F16K5DC	FSC	RAM	44- 75
219	18	TBP18SA22J	TII	ROM	49- 6
220	18	TBP18SA22N	TII	ROM	49- 7

SYMBOLS AND CODES EXPLAINED IN INTERPRETER

GENERIC PRODUCT INDEX

IN ORDER OF: (1)GENERIC NO. (2)MFR TYPE NO.

LINE No.	1 GENERIC NO.	2 MANUFACTURER TYPE NO.	MFR. CODE	PRODUCT CLASS	PAGE & LINE
1	18	TBP18SA42J	TII	ROM	51- 31
2	18	TBP18SA42N	TII	ROM	51- 32
3	18	TBP18SA46J	TII	ROM	51- 33
4	18	TBP18SA46N	TII	ROM	51- 34
5	18	CDP18U42CD	RCA	ROM	49- 9
6	18S22	TBP18S22J	TII	ROM	49- 4
7	18S22	TBP18S22MJ	TII	ROM	49- 8
8	18S22	TBP18S22N	TII	ROM	49- 5
9	18S030	TBP18S030J	TII	ROM	46- 16
10	18S030	TBP18S030N	TII	ROM	46- 17
11	18S42	TBP18S42J	TII	ROM	51- 37
12	18S42	TBP18S42MJ	TII	ROM	51- 35
13	18S42	TBP18S42N	TII	ROM	51- 38
14	18S46	TBP18S46J	TII	ROM	51- 29
15	18S46	TBP18S46MJ	TII	ROM	51- 36
16	18S46	TBP18S46N	TII	ROM	51- 30
17	21	MD21SC14AE10	MITC	RAM	33- 55
18	21	MD21SC14AE15	MITC	RAM	33- 56
19	21	MD21SC14AE25	MITC	RAM	33- 57
20	21F02	21F02-2F	PHIN	RAM	31- 9
21	21F02	21F02-2F	SIC	RAM	31- 9
22	21F02	21F02-2F	VALG	RAM	31- 9
23	21F02	21F02-2I	PHIN	RAM	31- 10
24	21F02	21F02-2I	SIC	RAM	31- 10
25	21F02	21F02-2I	VALG	RAM	31- 10
26	21F02	21F02-2N	PHIN	RAM	31- 11
27	21F02	21F02-2N	SIC	RAM	31- 11
28	21F02	21F02-2N	VALG	RAM	31- 11
29	21F02	21F02-4F	PHIN	RAM	31- 99
30	21F02	21F02-4F	SIC	RAM	31- 99
31	21F02	21F02-4F	VALG	RAM	31- 99
32	21F02	21F02-4I	PHIN	RAM	31-100
33	21F02	21F02-4I	SIC	RAM	31-100
34	21F02	21F02-4I	VALG	RAM	31-100
35	21F02	21F02-4N	PHIN	RAM	31-101
36	21F02	21F02-4N	SIC	RAM	31-101
37	21F02	21F02-4N	VALG	RAM	31-101
38	21F02	21F02B	MULB	RAM	31- 52
39	21F02	21F02B	SIC	RAM	31- 52
40	21F02	21F02F	MULB	RAM	31- 53
41	21F02	21F02F	PHIN	RAM	31- 53
42	21F02	21F02F	SIC	RAM	31- 53
43	21F02	21F02F	VALG	RAM	31- 53
44	21F02	21F02I	PHIN	RAM	31- 54
45	21F02	21F02I	SIC	RAM	31- 54
46	21F02	21F02I	VALG	RAM	31- 54
47	21F02	21F02N	PHIN	RAM	31- 55
48	21F02	21F02N	SIC	RAM	31- 55
49	21F02	21F02N	VALG	RAM	31- 55
50	21L02	21L02-1B	MULB	RAM	32- 26
51	21L02	21L02-1B	SIC	RAM	32- 26
52	21L02	21L02-1F	MULB	RAM	32- 27
53	21L02	21L02-1F	PHIN	RAM	32- 27
54	21L02	21L02-1F	SIC	RAM	32- 27
55	21L02	21L02-1F	VALG	RAM	32- 27
56	21L02	21L02-1I	PHIN	RAM	32- 28
57	21L02	21L02-1I	SIC	RAM	32- 28
58	21L02	21L02-1I	VALG	RAM	32- 28
59	21L02	21L02-1N	PHIN	RAM	32- 79
60	21L02	21L02-1N	SIC	RAM	32- 79
61	21L02	21L02-1N	VALG	RAM	32- 79
62	21L02	21L02-2F	PHIN	RAM	32- 39
63	21L02	21L02-2F	SIC	RAM	32- 39
64	21L02	21L02-2F	VALG	RAM	32- 39
65	21L02	21L02-2I	PHIN	RAM	32- 40
66	21L02	21L02-2I	SIC	RAM	32- 40
67	21L02	21L02-2I	VALG	RAM	32- 40
68	21L02	21L02-2N	PHIN	RAM	32- 41
69	21L02	21L02-2N	SIC	RAM	32- 41
70	21L02	21L02-2N	VALG	RAM	32- 41
71	21L02	21L02-3B	MULB	RAM	31- 87
72	21L02	21L02-3B	SIC	RAM	31- 87
73	21L02	21L02-3F	MULB	RAM	31- 88
74	21L02	21L02-3F	PHIN	RAM	31- 88
75	21L02	21L02-3F	SIC	RAM	31- 88
76	21L02	21L02-3F	VALG	RAM	31- 88
77	21L02	21L02-3I	MULB	RAM	31- 89
78	21L02	21L02-3I	PHIN	RAM	31- 89
79	21L02	21L02-3I	SIC	RAM	31- 89
80	21L02	21L02-3I	VALG	RAM	31- 89
81	21L02	21L02-3N	PHIN	RAM	31- 90
82	21L02	21L02-3N	SIC	RAM	31- 90
83	21L02	21L02-3N	VALG	RAM	31- 90
84	21L02	21L02F	SIC	RAM	32- 80
85	21L02	21L02F	VALG	RAM	32- 80
86	21L02	21L02FDC	FSC	RAM	31- 56
87	21L02	21L02FFC	FSC	RAM	31- 57
88	21L02	21L02FPC	FSC	RAM	31- 58
89	21L02	21L02HDC	FSC	RAM	31- 12
90	21L02	21L02HFC	FSC	RAM	31- 13
91	21L02	21L02HPC	FSC	RAM	31- 14
92	21L02	21L02I	SIC	RAM	32- 81
93	21L02	21L02I	VALG	RAM	32- 81
94	21L02	21L02N	SIC	RAM	32- 82
95	21L02	21L02N	VALG	RAM	32- 82
96	21L14	MCM21L14-20L	MOTA	RAM	34- 18
97	21L14	MCM21L14-20P	MOTA	RAM	34- 19
98	21L14	MCM21L14-25L	MOTA	RAM	34- 67
99	21L14	MCM21L14-25P	MOTA	RAM	34- 68
100	21L14	MCM21L14-30L	MOTA	RAM	35- 8
101	21L14	MCM21L14-30P	MOTA	RAM	35- 9
102	21L14	MCM21L14-45L	MOTA	RAM	35- 83
103	21L14	MCM21L14-45P	MOTA	RAM	35- 84
104	21L14	MCM21L14C20	MOTA	RAM	34- 20
105	21L14	MCM21L14C25	MOTA	RAM	34- 69
106	21L14	MCM21L14C30	MOTA	RAM	35- 10
107	21L14	MCM21L14C45	MOTA	RAM	35- 85
108	21L14	MCM21L14P20	MOTA	RAM	34- 21
109	21L14	MCM21L14P25	MOTA	RAM	34- 70
110	21L14	MCM21L14P30	MOTA	RAM	35- 11
111	21L14	MCM21L14P45	MOTA	RAM	35- 86
112	21L15	MCM21L15AC-45	MOTA	RAM	30-100
113	21L15	MCM21L15AC-70	MOTA	RAM	31- 2
114	21L021	21L021DC	FSC	RAM	31-102
115	21L021	21L021FC	FSC	RAM	31-103
116	21L021	21L021PC	FSC	RAM	31-104
117	21L022	21L022DC	FSC	RAM	32- 42
118	21L022	21L022FC	FSC	RAM	32- 43
119	21L022	21L022PC	FSC	RAM	32- 44
120	21L25	MCM21L25AC-45	MOTA	RAM	30-101
121	21L25	MCM21L25AC-70	MOTA	RAM	31- 3
122	21L47	TMS21L47-7JDL	TII	RAM	38- 29
123	21L47	TMS21L47-7JL	TII	RAM	38- 30
124	21L47	TMS21L47-7NL	TII	RAM	40- 80
125	21S145	HD21S145	HITJ	SHIFT REG	84- 20
126	23	MD23SC16AE	MITC	ROM	57- 89
127	24	TBP24SA10J	TII	ROM	47- 49
128	24	TBP24SA10N	TII	ROM	47- 50
129	24	TBP24SA41J	TII	ROM	53- 13
130	24	TBP24SA41N	TII	ROM	53- 14
131	24	TBP24SA81J	TII	ROM	56- 88
132	24	TBP24SA81N	TII	ROM	56- 89
133	24	TMSR24	WLD	SHIFT REG	83- 4
134	24S10	TBP24S10J	TII	ROM	47- 47
135	24S10	TBP24S10N	TII	ROM	47- 48
136	24S41	TBP24S41J	TII	ROM	53- 11
137	24S41	TBP24S41MJ	TII	ROM	53- 15
138	24S41	TBP24S41N	TII	ROM	53- 12
139	24S81	TBP24S81J	TII	ROM	56- 86
140	24S81	TBP24S81N	TII	ROM	56- 87
141	25	MCM25A32C	MOTA	ROM	60- 15
142	25	MCM25A32L	MOTA	ROM	60- 16
143	25L01	25L01B	PHIN	RAM	24- 14
144	25L01	25L01B	SIC	RAM	24- 14
145	25L01	25L01I	PHIN	RAM	24- 2
146	25L01	25L01I	SIC	RAM	24- 2
147	25L01	25L01I	VALG	RAM	24- 2
148	25L01	25L01N	SIC	RAM	24- 3
149	25L01	25L01N	VALG	RAM	24- 3
150	25L01	N25L01B	PHIN	RAM	24- 6
151	25L01	N25L01B	SIC	RAM	24- 6
152	25L01	N25L01I	PHIN	RAM	24- 7
153	25L01	N25L01I	SIC	RAM	24- 7
154	25L02	AM25L02DC	AMD	SHIFT REG	77- 35
155	25L02	AM25L02DM	AMD	SHIFT REG	77- 36
156	25L02	AM25L02FM	AMD	SHIFT REG	77- 37
157	25L02	AM25L02PC	AMD	SHIFT REG	77- 38
158	25L03	AM25L03DC	AMD	SHIFT REG	77- 39
159	25L03	AM25L03DM	AMD	SHIFT REG	77- 40
160	25L03	AM25L03FM	AMD	SHIFT REG	77- 41
161	25L03	AM25L03PC	AMD	SHIFT REG	77- 42
162	25L04	AM25L04DC	AMD	SHIFT REG	83- 58
163	25L04	AM25L04DM	AMD	SHIFT REG	83- 63
164	25L04	AM25L04FM	AMD	SHIFT REG	83- 64
165	25L04	AM25L04PC	AMD	SHIFT REG	83- 65
166	25L32	TMS25L32JL	TII	ROM	60- 28
167	25LS07	AM25LS07DC	AMD	SHIFT REG	76- 66
168	25LS07	AM25LS07DM	AMD	SHIFT REG	76- 67
169	25LS07	AM25LS07FM	AMD	SHIFT REG	76- 68
170	25LS07	AM25LS07PC	AMD	SHIFT REG	76- 69
171	25LS08	AM25LS08DC	AMD	SHIFT REG	72- 17
172	25LS08	AM25LS08DM	AMD	SHIFT REG	72- 18
173	25LS08	AM25LS08FM	AMD	SHIFT REG	72- 19
174	25LS08	AM25LS08PC	AMD	SHIFT REG	72- 20
175	25LS09	AM25LS09DC	AMD	SHIFT REG	72- 21
176	25LS09	AM25LS09DM	AMD	SHIFT REG	72- 22
177	25LS09	AM25LS09FM	AMD	SHIFT REG	72- 23
178	25LS09	AM25LS09PC	AMD	SHIFT REG	72- 24
179	25LS22	AM25LS22DC	AMD	SHIFT REG	80-102
180	25LS22	AM25LS22DM	AMD	SHIFT REG	81- 1
181	25LS22	AM25LS22FM	AMD	SHIFT REG	81- 2
182	25LS22	AM25LS22PC	AMD	SHIFT REG	81- 3
183	25LS23	AM25LS23DC	AMD	SHIFT REG	82- 5
184	25LS23	AM25LS23DM	AMD	SHIFT REG	82- 6
185	25LS23	AM25LS23FM	AMD	SHIFT REG	82- 7
186	25LS23	AM25LS23PC	AMD	SHIFT REG	82- 8
187	25LS164	AM25LS164DC	AMD	SHIFT REG	82- 1
188	25LS164	AM25LS164DM	AMD	SHIFT REG	82- 2
189	25LS164	AM25LS164FM	AMD	SHIFT REG	82- 3
190	25LS164	AM25LS164PC	AMD	SHIFT REG	82- 4
191	25LS174	AM25LS174DC	AMD	SHIFT REG	76- 70
192	25LS174	AM25LS174DM	AMD	SHIFT REG	76- 71
193	25LS174	AM25LS174FM	AMD	SHIFT REG	76- 72
194	25LS174	AM25LS174PC	AMD	SHIFT REG	76- 73
195	25LS175	AM25LS175DC	AMD	SHIFT REG	72- 25
196	25LS175	AM25LS175DM	AMD	SHIFT REG	72- 26
197	25LS175	AM25LS175FM	AMD	SHIFT REG	72- 27
198	25LS175	AM25LS175PC	AMD	SHIFT REG	72- 28
199	25LS194	AM25LS194ADC	AMD	SHIFT REG	71- 98
200	25LS194	AM25LS194ADM	AMD	SHIFT REG	71- 99
201	25LS194	AM25LS194AFM	AMD	SHIFT REG	71-100
202	25LS194	AM25LS194APC	AMD	SHIFT REG	71-101
203	25LS195	AM25LS195ADC	AMD	SHIFT REG	71-102
204	25LS195	AM25LS195ADM	AMD	SHIFT REG	71-103
205	25LS195	AM25LS195AFM	AMD	SHIFT REG	71-104
206	25LS195	AM25LS195APC	AMD	SHIFT REG	71-105
207	25LS273	AM25LS273DC	AMD	SHIFT REG	78- 40
208	25LS273	AM25LS273DM	AMD	SHIFT REG	78- 41
209	25LS273	AM25LS273FM	AMD	SHIFT REG	78- 42
210	25LS273	AM25LS273PC	AMD	SHIFT REG	78- 43
211	25LS299	AM25LS299DC	AMD	SHIFT REG	82- 9
212	25LS299	AM25LS299DM	AMD	SHIFT REG	82- 10
213	25LS299	AM25LS299FM	AMD	SHIFT REG	82- 11
214	25LS299	AM25LS299PC	AMD	SHIFT REG	82- 12
215	25LS374	AM25LS374DC	AMD	SHIFT REG	78- 44
216	25LS374	AM25LS374DM	AMD	SHIFT REG	78- 45
217	25LS374	AM25LS374FM	AMD	SHIFT REG	78- 46
218	25LS374	AM25LS374PC	AMD	SHIFT REG	78- 47
219	25LS377	AM25LS377BDC	AMD	SHIFT REG	78- 48
220	25LS377	AM25LS377BDM	AMD	SHIFT REG	78- 49

SYMBOLS AND CODES EXPLAINED IN INTERPRETER

GENERIC PRODUCT INDEX

IN ORDER OF: (1)GENERIC NO. (2)MFR TYPE NO.

LINE No.	1 GENERIC NO.	2 MANUFACTURER TYPE NO.	MFR. CODE	PRODUCT CLASS	PAGE & LINE
1	25LS377	AM25LS377BFM	AMD	SHIFT REG	78- 50
2	25LS377	AM25LS377BPC	AMD	SHIFT REG	78- 51
3	25LS377	AM25LS377DC	AMD	SHIFT REG	78- 52
4	25LS377	AM25LS377DM	AMD	SHIFT REG	78- 53
5	25LS377	AM25LS377FM	AMD	SHIFT REG	78- 54
6	25LS377	AM25LS377PC	AMD	SHIFT REG	78- 55
7	25LS2519	AM25LS2519DC	AMD	SHIFT REG	65- 37
8	25LS2519	AM25LS2519DM	AMD	SHIFT REG	65- 38
9	25LS2519	AM25LS2519FM	AMD	SHIFT REG	65- 39
10	25LS2519	AM25LS2519PC	AMD	SHIFT REG	65- 40
11	25LS2520	AM25LS2520DC	AMD	SHIFT REG	79- 29
12	25LS2520	AM25LS2520DM	AMD	SHIFT REG	79- 30
13	25LS2520	AM25LS2520PC	AMD	SHIFT REG	79- 31
14	25S07	AM25S07DC	AMD	SHIFT REG	75- 84
15	25S07	AM25S07DM	AMD	SHIFT REG	75- 85
16	25S07	AM25S07FM	AMD	SHIFT REG	75- 86
17	25S07	AM25S07PC	AMD	SHIFT REG	75- 87
18	25S08	AM25S08DC	AMD	SHIFT REG	65- 41
19	25S08	AM25S08DM	AMD	SHIFT REG	65- 42
20	25S08	AM25S08FM	AMD	SHIFT REG	65- 43
21	25S08	AM25S08PC	AMD	SHIFT REG	65- 44
22	25S09	AM25S09DC	AMD	SHIFT REG	65- 45
23	25S09	AM25S09DM	AMD	SHIFT REG	65- 46
24	25S09	AM25S09FM	AMD	SHIFT REG	65- 47
25	25S09	AM25S09PC	AMD	SHIFT REG	65- 48
26	25S10	AM25S10DC	AMD	SHIFT REG	65- 49
27	25S10	AM25S10DM	AMD	SHIFT REG	65- 50
28	25S10	AM25S10FM	AMD	SHIFT REG	65- 51
29	25S10	AM25S10PC	AMD	SHIFT REG	65- 52
30	25S18	AM25S18DC	AMD	SHIFT REG	72-103
31	25S18	AM25S18DM	AMD	SHIFT REG	72-104
32	25S18	AM25S18FM	AMD	SHIFT REG	72-105
33	25S18	AM25S18PC	AMD	SHIFT REG	72-106
34	27	TMS27A16C	MOTA	ROM	58-105
35	27	TMS27A16L	MOTA	ROM	58-106
36	27	MCM27A08C	MOTA	ROM	56- 2
37	27	MCM27A08L	MOTA	ROM	56- 3
38	27	MCM27A16C	MOTA	ROM	57- 56
39	27	MCM27A16L	MOTA	ROM	57- 57
40	27L08	TMS27L08JL	TII	ROM	56- 35
41	27LS00	AM27LS00DC	AMD	RAM	22-103
42	27LS00	AM27LS00DM	AMD	RAM	23- 14
43	27LS00	AM27LS00FM	AMD	RAM	23- 15
44	27LS00	AM27LS00PC	AMD	RAM	22-104
45	27LS01	AM27LS01DC	AMD	RAM	22-105
46	27LS01	AM27LS01DM	AMD	RAM	23- 16
47	27LS01	AM27LS01FM	AMD	RAM	23- 17
48	27LS01	AM27LS01PC	AMD	RAM	22-106
49	27LS02	AM27LS02DC	AMD	RAM	19- 41
50	27LS02	AM27LS02DM	AMD	RAM	19- 45
51	27LS02	AM27LS02FM	AMD	RAM	19- 46
52	27LS02	AM27LS02PC	AMD	RAM	19- 42
53	27LS03	AM27LS03DC	AMD	RAM	19- 43
54	27LS03	AM27LS03DM	AMD	RAM	19- 47
55	27LS03	AM27LS03FM	AMD	RAM	19- 48
56	27LS03	AM27LS03PC	AMD	RAM	19- 44
57	27LS18	AM27LS18DC	AMD	ROM	46- 74
58	27LS18	AM27LS18DM	AMD	ROM	46- 33
59	27LS18	AM27LS18FM	AMD	ROM	46- 34
60	27LS19	AM27LS19DC	AMD	ROM	46- 13
61	27LS19	AM27LS19DM	AMD	ROM	46- 14
62	27LS19	AM27LS19FM	AMD	ROM	46- 15
63	27S02	AM27S02ADC	AMD	RAM	19- 33
64	27S02	AM27S02ADM	AMD	RAM	19- 37
65	27S02	AM27S02AFM	AMD	RAM	19- 38
66	27S02	AM27S02APC	AMD	RAM	19- 34
67	27S02	AM27S02DC	AMD	RAM	19-108
68	27S02	AM27S02DM	AMD	RAM	19-109
69	27S02	AM27S02FM	AMD	RAM	19-110
70	27S02	AM27S02PC	AMD	RAM	20- 1
71	27S03	AM27S03ADC	AMD	RAM	19- 35
72	27S03	AM27S03ADM	AMD	RAM	19- 39
73	27S03	AM27S03AFM	AMD	RAM	19- 40
74	27S03	AM27S03APC	AMD	RAM	19- 36
75	27S03	AM27S03DC	AMD	RAM	20- 2
76	27S03	AM27S03DM	AMD	RAM	20- 3
77	27S03	AM27S03FM	AMD	RAM	20- 4
78	27S03	AM27S03PC	AMD	RAM	20- 5
79	27S08	AM27S08DC	AMD	ROM	46- 60
80	27S08	AM27S08DM	AMD	ROM	46- 61
81	27S09	AM27S09DC	AMD	ROM	46- 62
82	27S09	AM27S09DM	AMD	ROM	46- 63
83	27S10	AM27S10DC	AMD	ROM	48- 23
84	27S10	AM27S10DM	AMD	ROM	48- 24
85	27S11	AM27S11DC	AMD	ROM	48- 25
86	27S11	AM27S11DM	AMD	ROM	48- 26
87	27S12	AM27S12FM	AMD	ROM	50- 41
88	27S12	AM27S12DC	AMD	ROM	50- 23
89	27S12	AM27S12DM	AMD	ROM	50- 40
90	27S13	AM27S13DC	AMD	ROM	50- 24
91	27S13	AM27S13DM	AMD	ROM	50- 42
92	27S13	AM27S13FM	AMD	ROM	50- 43
93	27S15	AM27S15DC	AMD	ROM	52- 15
94	27S15	AM27S15DM	AMD	ROM	52- 64
95	27S18	AM27S18DC	AMD	ROM	46- 52
96	27S18	AM27S18DM	AMD	ROM	46- 64
97	27S18	AM27S18FM	AMD	ROM	46- 65
98	27S19	AM27S19DC	AMD	ROM	46- 53
99	27S19	AM27S19DM	AMD	ROM	46- 66
100	27S19	AM27S19FM	AMD	ROM	46- 67
101	27S20	AM27S20DC	AMD	ROM	48- 9
102	27S20	AM27S20DM	AMD	ROM	48- 27
103	27S20	AM27S20FM	AMD	ROM	48- 28
104	27S21	AM27S21DC	AMD	ROM	48- 10
105	27S21	AM27S21DM	AMD	ROM	48- 29
106	27S21	AM27S21FM	AMD	ROM	48- 30
107	27S25	AM27S25DC	AMD	ROM	51- 96
108	27S25	AM27S25DM	AMD	ROM	51- 97
109	27S26	AM27S26DC	AMD	ROM	51-105
110	27S26	AM27S26DM	AMD	ROM	51-106
111	27S27	AM27S27DC	AMD	ROM	51-107
112	27S27	AM27S27DM	AMD	ROM	52- 1
113	27S28	AM27S28DC	AMD	ROM	52- 11
114	27S28	AM27S28DM	AMD	ROM	52- 37
115	27S29	AM27S29DC	AMD	ROM	52- 12
116	27S29	AM27S29DM	AMD	ROM	52- 38
117	27S30	AM27S30DC	AMD	ROM	52- 13
118	27S30	AM27S30DM	AMD	ROM	52- 39
119	27S31	AM27S31DC	AMD	ROM	52- 14
120	27S31	AM27S31DM	AMD	ROM	52- 40
121	27S32	AM27S32DC	AMD	ROM	53- 79
122	27S32	AM27S32DM	AMD	ROM	53- 83
123	27S32	AM27S32PC	AMD	ROM	53- 80
124	27S33	AM27S33DC	AMD	ROM	53- 81
125	27S33	AM27S33DM	AMD	ROM	53- 84
126	27S33	AM27S33PC	AMD	ROM	53- 82
127	27S80	AM27S80DC	AMD	ROM	54- 25
128	27S80	AM27S80DM	AMD	ROM	54- 26
129	27S80	AM27S80XX	AMD	ROM	54- 27
130	27S81	AM27S81DC	AMD	ROM	54- 28
131	27S81	AM27S81DM	AMD	ROM	54- 29
132	27S81	AM27S81XX	AMD	ROM	54- 30
133	27S180	AM27S180DC	AMD	ROM	55- 33
134	27S180	AM27S180DM	AMD	ROM	55- 51
135	27S181	AM27S181DC	AMD	ROM	55- 34
136	27S181	AM27S181DM	AMD	ROM	55- 52
137	27S184	AM27S184DC	AMD	ROM	56- 99
138	27S184	AM27S184DM	AMD	ROM	56-100
139	27S185	AM27S185DC	AMD	ROM	56-101
140	27S185	AM27S185DM	AMD	ROM	57- 25
141	28	TBP28P42J	TII	ROM	51- 17
142	28	TBP28P42N	TII	ROM	51- 18
143	28	TBP28P45J	TII	ROM	51- 19
144	28	TBP28P45N	TII	ROM	51- 20
145	28	TBP28P85J	TII	ROM	54- 6
146	28	TBP28P85N	TII	ROM	54- 7
147	28	TBP28P166J	TII	ROM	57- 44
148	28	TBP28P166N	TII	ROM	57- 45
149	28	TBP28SA86J	TII	ROM	54- 14
150	28	TBP28SA86N	TII	ROM	54- 15
151	28L22	TBP28L22J	TII	ROM	49- 2
152	28L22	TBP28L22N	TII	ROM	49- 3
153	28L42	TBP28L42J	TII	ROM	51- 25
154	28L42	TBP28L42N	TII	ROM	51- 26
155	28L45	TBP28L45J	TII	ROM	51- 27
156	28L45	TBP28L45N	TII	ROM	51- 28
157	28L85	TBP28L85J	TII	ROM	54- 10
158	28L85	TBP28L85N	TII	ROM	54- 11
159	28L86	TBP28L86J	TII	ROM	54- 16
160	28L86	TBP28L86MJ	TII	ROM	54- 18
161	28L86	TBP28L86N	TII	ROM	54- 17
162	28L166	TBP28L166J	TII	ROM	57- 48
163	28L166	TBP28L166N	TII	ROM	57- 49
164	28R45	TBP28R45J	TII	ROM	51- 15
165	28R45	TBP28R45N	TII	ROM	51- 16
166	28R85	TBP28R85J	TII	ROM	54- 4
167	28R85	TBP28R85N	TII	ROM	54- 5
168	28R166	TBP28R166J	TII	ROM	57- 42
169	28R166	TBP28R166N	TII	ROM	57- 43
170	28S42	TBP28S42J	TII	ROM	51- 21
171	28S42	TBP28S42N	TII	ROM	51- 22
172	28S45	TBP28S45J	TII	ROM	51- 23
173	28S45	TBP28S45N	TII	ROM	51- 24
174	28S85	TBP28S85J	TII	ROM	54- 8
175	28S85	TBP28S85N	TII	ROM	54- 9
176	28S86	TBP28S86J	TII	ROM	54- 12
177	28S86	TBP28S86N	TII	ROM	54- 13
178	28S166	TBP28S166J	TII	ROM	57- 46
179	28S166	TBP28S166N	TII	ROM	57- 47
180	31	FBM31DB	FCA	SPECIAL	87- 16
181	31L01	AM31L01DC	AMD	RAM	20- 97
182	31L01	AM31L01DM	AMD	RAM	20- 78
183	31L01	AM31L01E	AMD	RAM	20- 81
184	31L01	AM31L01FM	AMD	RAM	20- 79
185	31L01	AM31L01PC	AMD	RAM	20- 80
186	31L013	AM31L013E	AMD	RAM	20- 82
187	32	RM32	ECV	ROM	46- 10
188	32	TMSR32	WLD	SHIFT REG	83- 5
189	40L44	TMS40L44-15NL	TII	RAM	40-103
190	40L44	TMS40L44-20NL	TII	RAM	41- 23
191	40L44	TMS40L44-25NL	TII	RAM	41- 46
192	40L44	TMS40L44-45NL	TII	RAM	41- 99
193	40L45	TMS40L45-20NL	TII	RAM	34- 52
194	40L45	TMS40L45-25NL	TII	RAM	34- 82
195	40L45	TMS40L45-45NL	TII	RAM	36- 14
196	43	FBM43DA	FCA	SPECIAL	87- 15
197	53S483	53S483N	MMI	ROM	51- 98
198	54C89	MM54C89J	NSC	RAM	20- 98
199	54C200	MM54C200J	NSC	RAM	23- 81
200	54C910	MM54C910J	NSC	RAM	21- 47
201	54C920	MM54C920J	NSC	RAM	24-110
202	54C920	MM54C920N-3	NSC	RAM	24-105
203	54C921	MM54C921J	NSC	RAM	25- 1
204	54C929	MM54C929J	NSC	RAM	29- 77
205	54C930	MM54C930J	NSC	RAM	29- 78
206	54C989	MM54C989J	NSC	RAM	21- 1
207	54F189	54F189DM	FSC	RAM	19- 98
208	54F189	54F189FM	FSC	RAM	19- 99
209	54F289	54F289DM	FSC	RAM	19-100
210	54F289	54F289FM	FSC	RAM	19-101
211	54L91	ZN54L91E	FERB	SHIFT REG	82- 21
212	54L91	ZN54L91J	FERB	SHIFT REG	82- 22
213	54L91	SN54L91J	TII	SHIFT REG	82- 16
214	54L91	SN54L91N	TII	SHIFT REG	82- 17
215	54L91	SN54L91T	TII	SHIFT REG	82- 18
216	54L95	ZN54L95E	FERB	SHIFT REG	66- 16
217	54L95	ZN54L95J	FERB	SHIFT REG	66- 17
218	54L95	SN54L95J	TII	SHIFT REG	66- 9
219	54L95	SN54L95T	TII	SHIFT REG	66- 10
220	54L96	ZN54L96E	FERB	SHIFT REG	74- 54

SYMBOLS AND CODES EXPLAINED IN INTERPRETER

GENERIC PRODUCT INDEX

IN ORDER OF: (1)GENERIC NO. (2)MFR TYPE NO.

LINE No.	1 GENERIC NO.	2 MANUFACTURER TYPE NO.	MFR. CODE	PRODUCT CLASS	PAGE & LINE
1	54L96	ZN54L96J	FERB	SHIFT REG	74- 55
2	54L96	SN54L96J	TII	SHIFT REG	74- 51
3	54L99	SN54L99J	TII	SHIFT REG	66- 11
4	54L164	ZN54L164E	FERB	SHIFT REG	81- 31
5	54L164	ZN54L164J	FERB	SHIFT REG	81- 32
6	54L164	SN54L164J	TII	SHIFT REG	81- 25
7	54L164	SN54L164N	TII	SHIFT REG	81- 26
8	54L164	SN54L164T	TII	SHIFT REG	81- 27
9	54LS89	54LS89DM	FSC	RAM	19- 65
10	54LS89	54LS89FM	FSC	RAM	19- 66
11	54LS89	SN54LS89J	MOTA	RAM	19- 74
12	54LS89	SN54LS89W	MOTA	RAM	19- 75
13	54LS91	54LS91J	RTN	SHIFT REG	82- 25
14	54LS91	54LS91W	RTN	SHIFT REG	82- 26
15	54LS91	SN54LS91J	TII	SHIFT REG	82- 46
16	54LS91	SN54LS91W	TII	SHIFT REG	82- 47
17	54LS95	54LS95BDM	FSC	SHIFT REG	70- 53
18	54LS95	54LS95BFM	FSC	SHIFT REG	70- 54
19	54LS95	54LS95BJ	RTN	SHIFT REG	68- 26
20	54LS95	54LS95BW	RTN	SHIFT REG	68- 27
21	54LS95	S54LS95BF	PHIN	SHIFT REG	69- 31
22	54LS95	S54LS95BF	SIC	SHIFT REG	69- 31
23	54LS95	S54LS95BF	VALG	SHIFT REG	69- 31
24	54LS95	S54LS95BW	PHIN	SHIFT REG	69- 32
25	54LS95	S54LS95BW	SIC	SHIFT REG	69- 32
26	54LS95	S54LS95BW	VALG	SHIFT REG	69- 32
27	54LS95	SN54LS95AJ	TII	SHIFT REG	70- 48
28	54LS95	SN54LS95AW	TII	SHIFT REG	70- 49
29	54LS95	SN54LS95BJ	MOTA	SHIFT REG	71- 6
30	54LS95	SN54LS95BJ	TII	SHIFT REG	71- 6
31	54LS95	SN54LS95BW	MOTA	SHIFT REG	71- 7
32	54LS95	SN54LS95BW	TII	SHIFT REG	71- 7
33	54LS96	S54LS96F	PHIN	SHIFT REG	75- 8
34	54LS96	S54LS96F	SIC	SHIFT REG	75- 8
35	54LS96	S54LS96F	VALG	SHIFT REG	75- 8
36	54LS96	S54LS96W	PHIN	SHIFT REG	75- 9
37	54LS96	S54LS96W	SIC	SHIFT REG	75- 9
38	54LS96	S54LS96W	VALG	SHIFT REG	75- 9
39	54LS96	SN54LS96J	TII	SHIFT REG	74- 84
40	54LS96	SN54LS96W	TII	SHIFT REG	74- 85
41	54LS164	54LS164DM	FSC	SHIFT REG	81- 52
42	54LS164	54LS164FM	FSC	SHIFT REG	81- 53
43	54LS164	54LS164J	RTN	SHIFT REG	81- 54
44	54LS164	54LS164W	RTN	SHIFT REG	81- 55
45	54LS164	S54LS164F	PHIN	SHIFT REG	81- 68
46	54LS164	S54LS164F	SIC	SHIFT REG	81- 68
47	54LS164	S54LS164F	VALG	SHIFT REG	81- 68
48	54LS164	S54LS164W	PHIN	SHIFT REG	81- 69
49	54LS164	S54LS164W	SIC	SHIFT REG	81- 69
50	54LS164	S54LS164W	VALG	SHIFT REG	81- 69
51	54LS164	SN54LS164J	AMD	SHIFT REG	81- 70
52	54LS164	SN54LS164J	MOTA	SHIFT REG	81- 70
53	54LS164	SN54LS164J	TII	SHIFT REG	81- 70
54	54LS164	SN54LS164W	AMD	SHIFT REG	81- 71
55	54LS164	SN54LS164W	MOTA	SHIFT REG	81- 71
56	54LS164	SN54LS164W	TII	SHIFT REG	81- 71
57	54LS165	54LS165DM	FSC	SHIFT REG	80- 90
58	54LS165	54LS165FM	FSC	SHIFT REG	80- 91
59	54LS165	SN54LS165J	MOTA	SHIFT REG	80- 95
60	54LS165	SN54LS165J	TII	SHIFT REG	80- 95
61	54LS165	SN54LS165W	MOTA	SHIFT REG	80- 96
62	54LS165	SN54LS165W	TII	SHIFT REG	80- 96
63	54LS166	SN54LS166J	TII	SHIFT REG	80- 73
64	54LS166	SN54LS166W	TII	SHIFT REG	80- 74
65	54LS170	54LS170DM	FSC	RAM	18- 3
66	54LS170	54LS170FM	FSC	RAM	18- 4
67	54LS170	RC54LS170F	MULB	RAM	18- 56
68	54LS170	RC54LS170W	MULB	RAM	18- 57
69	54LS170	S54LS170F	PHIN	RAM	18- 58
70	54LS170	S54LS170F	SIC	RAM	18- 58
71	54LS170	S54LS170F	VALG	RAM	18- 58
72	54LS170	S54LS170W	PHIN	RAM	18- 59
73	54LS170	S54LS170W	SIC	RAM	18- 59
74	54LS170	S54LS170W	VALG	RAM	18- 59
75	54LS170	SN54LS170J	MOTA	RAM	18- 15
76	54LS170	SN54LS170J	TII	RAM	18- 15
77	54LS170	SN54LS170W	MOTA	RAM	18- 16
78	54LS170	SN54LS170W	TII	RAM	18- 16
79	54LS174	54LS174J	RTN	SHIFT REG	76- 64
80	54LS174	54LS174W	RTN	SHIFT REG	76- 65
81	54LS174	RC54LS174B	MULB	SHIFT REG	76- 58
82	54LS174	RC54LS174F	MULB	SHIFT REG	76- 59
83	54LS174	RC54LS174W	MULB	SHIFT REG	76- 60
84	54LS174	S54LS174B	MULB	SHIFT REG	76- 61
85	54LS174	S54LS174B	PHIN	SHIFT REG	76- 61
86	54LS174	S54LS174B	SIC	SHIFT REG	76- 61
87	54LS174	S54LS174F	MULB	SHIFT REG	76- 62
88	54LS174	S54LS174F	PHIN	SHIFT REG	76- 62
89	54LS174	S54LS174F	SIC	SHIFT REG	76- 62
90	54LS174	S54LS174F	VALG	SHIFT REG	76- 62
91	54LS174	S54LS174W	MULB	SHIFT REG	76- 63
92	54LS174	S54LS174W	PHIN	SHIFT REG	76- 63
93	54LS174	S54LS174W	SIC	SHIFT REG	76- 63
94	54LS174	S54LS174W	VALG	SHIFT REG	76- 63
95	54LS174	SN54LS174J	MOTA	SHIFT REG	76- 46
96	54LS174	SN54LS174J	TII	SHIFT REG	76- 46
97	54LS174	SN54LS174W	MOTA	SHIFT REG	76- 47
98	54LS174	SN54LS174W	TII	SHIFT REG	76- 47
99	54LS175	54LS175J	RTN	SHIFT REG	71- 96
100	54LS175	54LS175W	RTN	SHIFT REG	71- 97
101	54LS175	RC54LS175B	MULB	SHIFT REG	71- 65
102	54LS175	RC54LS175F	MULB	SHIFT REG	71- 66
103	54LS175	RC54LS175W	MULB	SHIFT REG	71- 67
104	54LS175	S54LS175B	MULB	SHIFT REG	71- 73
105	54LS175	S54LS175B	PHIN	SHIFT REG	71- 73
106	54LS175	S54LS175B	SIC	SHIFT REG	71- 73
107	54LS175	S54LS175F	MULB	SHIFT REG	71- 74
108	54LS175	S54LS175F	PHIN	SHIFT REG	71- 74
109	54LS175	S54LS175F	SIC	SHIFT REG	71- 74
110	54LS175	S54LS175F	VALG	SHIFT REG	71- 74
111	54LS175	S54LS175W	MULB	SHIFT REG	71- 75
112	54LS175	S54LS175W	PHIN	SHIFT REG	71- 75
113	54LS175	S54LS175W	SIC	SHIFT REG	71- 75
114	54LS175	S54LS175W	VALG	SHIFT REG	71- 75
115	54LS175	SN54LS175J	MOTA	SHIFT REG	71- 8
116	54LS175	SN54LS175J	TII	SHIFT REG	71- 8
117	54LS175	SN54LS175W	MOTA	SHIFT REG	71- 9
118	54LS175	SN54LS175W	TII	SHIFT REG	71- 9
119	54LS189	54LS189DM	FSC	RAM	20- 35
120	54LS189	54LS189FM	FSC	RAM	20- 36
121	54LS189	SN54LS189J	MOTA	RAM	19- 76
122	54LS189	SN54LS189J	TII	RAM	19- 76
123	54LS189	SN54LS189W	MOTA	RAM	19- 77
124	54LS189	SN54LS189W	TII	RAM	19- 77
125	54LS194	54LS194ADM	FSC	SHIFT REG	70- 55
126	54LS194	54LS194AFM	FSC	SHIFT REG	70- 56
127	54LS194	54LS194AJ	RTN	SHIFT REG	70- 57
128	54LS194	54LS194AW	RTN	SHIFT REG	70- 58
129	54LS194	S54LS194AF	PHIN	SHIFT REG	69- 33
130	54LS194	S54LS194AF	SIC	SHIFT REG	69- 33
131	54LS194	S54LS194AF	VALG	SHIFT REG	69- 33
132	54LS194	S54LS194AW	PHIN	SHIFT REG	69- 34
133	54LS194	S54LS194AW	SIC	SHIFT REG	69- 34
134	54LS194	S54LS194AW	VALG	SHIFT REG	69- 34
135	54LS194	SN54LS194AJ	AMD	SHIFT REG	71- 10
136	54LS194	SN54LS194AJ	MOTA	SHIFT REG	71- 10
137	54LS194	SN54LS194AJ	TII	SHIFT REG	71- 10
138	54LS194	SN54LS194AW	AMD	SHIFT REG	71- 11
139	54LS194	SN54LS194AW	MOTA	SHIFT REG	71- 11
140	54LS194	SN54LS194AW	TII	SHIFT REG	71- 11
141	54LS195	54LS195ADM	FSC	SHIFT REG	70- 59
142	54LS195	54LS195AFM	FSC	SHIFT REG	70- 60
143	54LS195	54LS195AJ	RTN	SHIFT REG	70- 61
144	54LS195	54LS195AW	RTN	SHIFT REG	70- 62
145	54LS195	S54LS195AF	PHIN	SHIFT REG	70-108
146	54LS195	S54LS195AF	SIC	SHIFT REG	70-108
147	54LS195	S54LS195AF	VALG	SHIFT REG	70-108
148	54LS195	S54LS195AW	PHIN	SHIFT REG	70-109
149	54LS195	S54LS195AW	SIC	SHIFT REG	70-109
150	54LS195	S54LS195AW	VALG	SHIFT REG	70-109
151	54LS195	SN54LS195AJ	AMD	SHIFT REG	71- 12
152	54LS195	SN54LS195AJ	MOTA	SHIFT REG	71- 12
153	54LS195	SN54LS195AJ	TII	SHIFT REG	71- 12
154	54LS195	SN54LS195AW	AMD	SHIFT REG	71- 13
155	54LS195	SN54LS195AW	MOTA	SHIFT REG	71- 13
156	54LS195	SN54LS195AW	TII	SHIFT REG	71- 13
157	54LS200	SN54LS200AJ	TII	RAM	23- 20
158	54LS200	SN54LS200AW	TII	RAM	23- 21
159	54LS202	SN54LS202J	TII	RAM	22- 82
160	54LS202	SN54LS202W	TII	RAM	22- 83
161	54LS207	SN54LS207J	TII	RAM	24- 49
162	54LS208	SN54LS208J	TII	RAM	24- 50
163	54LS214	SN54LS214J	TII	RAM	28- 78
164	54LS215	SN54LS215J	TII	RAM	28- 62
165	54LS219	SN54LS219J	TII	RAM	19- 78
166	54LS219	SN54LS219W	TII	RAM	19- 79
167	54LS273	S54LS273F	PHIN	SHIFT REG	78- 61
168	54LS273	S54LS273F	SIC	SHIFT REG	78- 61
169	54LS273	S54LS273F	VALG	SHIFT REG	78- 61
170	54LS273	SN54LS273J	AMD	SHIFT REG	78- 63
171	54LS273	SN54LS273J	MOTA	SHIFT REG	78- 63
172	54LS273	SN54LS273J	TII	SHIFT REG	78- 63
173	54LS273	SN54LS273W	AMD	SHIFT REG	78- 64
174	54LS273	SN54LS273W	MOTA	SHIFT REG	78- 64
175	54LS289	54LS289DM	FSC	RAM	20- 37
176	54LS289	54LS289FM	FSC	RAM	20- 38
177	54LS289	S54LS289F	PHIN	RAM	19- 72
178	54LS289	S54LS289F	SIC	RAM	19- 72
179	54LS289	S54LS289F	VALG	RAM	19- 72
180	54LS289	S54LS289W	PHIN	RAM	19- 73
181	54LS289	S54LS289W	SIC	RAM	19- 73
182	54LS289	S54LS289W	VALG	RAM	19- 73
183	54LS289	SN54LS289J	MOTA	RAM	19- 80
184	54LS289	SN54LS289J	TII	RAM	19- 80
185	54LS289	SN54LS289W	MOTA	RAM	19- 81
186	54LS289	SN54LS289W	TII	RAM	19- 81
187	54LS295	54LS295ADM	FSC	SHIFT REG	70- 63
188	54LS295	54LS295AFM	FSC	SHIFT REG	70- 64
189	54LS295	54LS295AJ	RTN	SHIFT REG	70- 65
190	54LS295	54LS295AW	RTN	SHIFT REG	70- 66
191	54LS295	S54LS295BF	PHIN	SHIFT REG	70-110
192	54LS295	S54LS295BF	SIC	SHIFT REG	70-110
193	54LS295	S54LS295BF	VALG	SHIFT REG	70-110
194	54LS295	S54LS295BW	PHIN	SHIFT REG	71- 1
195	54LS295	S54LS295BW	SIC	SHIFT REG	71- 1
196	54LS295	S54LS295BW	VALG	SHIFT REG	71- 1
197	54LS295	SN54LS295AJ	MOTA	SHIFT REG	71- 14
198	54LS295	SN54LS295AJ	TII	SHIFT REG	71- 14
199	54LS295	SN54LS295AW	MOTA	SHIFT REG	71- 15
200	54LS295	SN54LS295AW	TII	SHIFT REG	71- 15
201	54LS295	SN54LS295BJ	TII	SHIFT REG	69- 40
202	54LS295	SN54LS295BW	TII	SHIFT REG	69- 41
203	54LS298	S54LS298F	PHIN	SHIFT REG	69- 35
204	54LS298	S54LS298F	SIC	SHIFT REG	69- 35
205	54LS298	S54LS298F	VALG	SHIFT REG	69- 35
206	54LS298	S54LS298W	PHIN	SHIFT REG	69- 36
207	54LS298	S54LS298W	SIC	SHIFT REG	69- 36
208	54LS298	S54LS298W	VALG	SHIFT REG	69- 36
209	54LS299	54LS299DM	FSC	SHIFT REG	78- 85
210	54LS299	54LS299FM	FSC	SHIFT REG	78- 86
211	54LS299	S54LS299F	PHIN	SHIFT REG	78-108
212	54LS299	S54LS299F	SIC	SHIFT REG	78-108
213	54LS299	S54LS299F	VALG	SHIFT REG	78-108
214	54LS299	SN54LS299J	MOTA	SHIFT REG	78- 65
215	54LS299	SN54LS299J	TII	SHIFT REG	78- 65
216	54LS299	SN54LS299W	AMD	SHIFT REG	81- 92
217	54LS299	SN54LS299W	MOTA	SHIFT REG	81- 92
218	54LS300	SN54LS300AJ	TII	RAM	23- 22
219	54LS300	SN54LS300AW	TII	RAM	23- 23
220	54LS302	SN54LS302J	TII	RAM	22- 84

SYMBOLS AND CODES EXPLAINED IN INTERPRETER

GENERIC PRODUCT INDEX

IN ORDER OF: (1)GENERIC NO. (2)MFR TYPE NO.

LINE No.	1 GENERIC NO.	2 MANUFACTURER TYPE NO.	MFR. CODE	PRODUCT CLASS	PAGE & LINE
1	54LS302	SN54LS302W	TII	RAM	22- 85
2	54LS314	SN54LS314J	TII	RAM	28- 79
3	54LS315	SN54LS315J	TII	RAM	28- 63
4	54LS319	SN54LS319J	TII	RAM	19- 82
5	54LS319	SN54LS319W	TII	RAM	19- 83
6	54LS322	54LS322DM	FSC	SHIFT REG	78- 87
7	54LS322	54LS322FM	FSC	SHIFT REG	78- 88
8	54LS322	SN54LS322J	AMD	SHIFT REG	79- 2
9	54LS322	SN54LS322J	MOTA	SHIFT REG	79- 2
10	54LS322	SN54LS322J	TII	SHIFT REG	79- 2
11	54LS322	SN54LS322W	AMD	SHIFT REG	79- 3
12	54LS322	SN54LS322W	MOTA	SHIFT REG	79- 3
13	54LS323	54LS323DM	FSC	SHIFT REG	78- 89
14	54LS323	54LS323FM	FSC	SHIFT REG	78- 90
15	54LS323	S54LS323F	PHIN	SHIFT REG	78-109
16	54LS323	S54LS323F	SIC	SHIFT REG	78-109
17	54LS323	S54LS323F	VALG	SHIFT REG	78-109
18	54LS323	SN54LS323J	AMD	SHIFT REG	79- 4
19	54LS323	SN54LS323J	MOTA	SHIFT REG	79- 4
20	54LS323	SN54LS323J	TII	SHIFT REG	79- 4
21	54LS323	SN54LS323W	AMD	SHIFT REG	79- 5
22	54LS323	SN54LS323W	MOTA	SHIFT REG	79- 5
23	54LS364	S54LS364F	SIC	SHIFT REG	78-110
24	54LS364	S54LS364F	VALG	SHIFT REG	78-110
25	54LS373	SN54LS373J	TII	SHIFT REG	79- 6
26	54LS374	S54LS374F	PHIN	SHIFT REG	79- 1
27	54LS374	S54LS374F	SIC	SHIFT REG	79- 1
28	54LS374	S54LS374F	VALG	SHIFT REG	79- 1
29	54LS374	SN54LS374J	AMD	SHIFT REG	79- 7
30	54LS374	SN54LS374J	MOTA	SHIFT REG	79- 7
31	54LS374	SN54LS374J	TII	SHIFT REG	79- 7
32	54LS374	SN54LS374W	AMD	SHIFT REG	79- 8
33	54LS374	SN54LS374W	MOTA	SHIFT REG	79- 8
34	54LS377	S54LS377F	PHIN	SHIFT REG	78- 62
35	54LS377	S54LS377F	SIC	SHIFT REG	78- 62
36	54LS377	S54LS377F	VALG	SHIFT REG	78- 62
37	54LS377	SN54LS377J	AMD	SHIFT REG	78- 66
38	54LS377	SN54LS377J	MOTA	SHIFT REG	78- 66
39	54LS377	SN54LS377J	TII	SHIFT REG	78- 66
40	54LS377	SN54LS377W	AMD	SHIFT REG	78- 67
41	54LS377	SN54LS377W	MOTA	SHIFT REG	78- 67
42	54LS378	54LS378DM	FSC	SHIFT REG	76- 36
43	54LS378	54LS378FM	FSC	SHIFT REG	76- 37
44	54LS378	S54LS378F	PHIN	SHIFT REG	76- 44
45	54LS378	S54LS378F	SIC	SHIFT REG	76- 44
46	54LS378	S54LS378F	VALG	SHIFT REG	76- 44
47	54LS378	S54LS378W	PHIN	SHIFT REG	76- 45
48	54LS378	S54LS378W	SIC	SHIFT REG	76- 45
49	54LS378	S54LS378W	VALG	SHIFT REG	76- 45
50	54LS378	SN54LS378J	MOTA	SHIFT REG	76- 48
51	54LS378	SN54LS378J	TII	SHIFT REG	76- 48
52	54LS378	SN54LS378W	MOTA	SHIFT REG	76- 49
53	54LS378	SN54LS378W	TII	SHIFT REG	76- 49
54	54LS379	54LS379DM	FSC	SHIFT REG	70- 67
55	54LS379	54LS379FM	FSC	SHIFT REG	70- 68
56	54LS379	S54LS379F	PHIN	SHIFT REG	71- 2
57	54LS379	S54LS379F	SIC	SHIFT REG	71- 2
58	54LS379	S54LS379F	VALG	SHIFT REG	71- 2
59	54LS379	S54LS379W	PHIN	SHIFT REG	71- 3
60	54LS379	S54LS379W	SIC	SHIFT REG	71- 3
61	54LS379	S54LS379W	VALG	SHIFT REG	71- 3
62	54LS379	SN54LS379J	MOTA	SHIFT REG	71- 16
63	54LS379	SN54LS379J	TII	SHIFT REG	71- 16
64	54LS379	SN54LS379W	MOTA	SHIFT REG	71- 17
65	54LS379	SN54LS379W	TII	SHIFT REG	71- 17
66	54LS395	54LS395AJ	RTN	SHIFT REG	69- 11
67	54LS395	54LS395AW	RTN	SHIFT REG	69- 12
68	54LS395	54LS395DM	FSC	SHIFT REG	70- 69
69	54LS395	54LS395FM	FSC	SHIFT REG	70- 70
70	54LS395	S54LS395AF	PHIN	SHIFT REG	71- 4
71	54LS395	S54LS395AF	SIC	SHIFT REG	71- 4
72	54LS395	S54LS395AF	VALG	SHIFT REG	71- 4
73	54LS395	S54LS395AW	PHIN	SHIFT REG	71- 5
74	54LS395	S54LS395AW	SIC	SHIFT REG	71- 5
75	54LS395	S54LS395AW	VALG	SHIFT REG	71- 5
76	54LS395	SN54LS395AJ	TII	SHIFT REG	69- 42
77	54LS395	SN54LS395AW	TII	SHIFT REG	69- 43
78	54LS395	SN54LS395J	MOTA	SHIFT REG	71- 18
79	54LS395	SN54LS395J	TII	SHIFT REG	71- 18
80	54LS395	SN54LS395W	MOTA	SHIFT REG	71- 19
81	54LS395	SN54LS395W	TII	SHIFT REG	71- 19
82	54LS396	SN54LS396J	TII	SHIFT REG	73- 70
83	54LS396	SN54LS396W	TII	SHIFT REG	73- 71
84	54LS398	S54LS398F	PHIN	SHIFT REG	69- 37
85	54LS398	S54LS398F	SIC	SHIFT REG	69- 37
86	54LS398	S54LS398F	VALG	SHIFT REG	69- 37
87	54LS399	S54LS399F	PHIN	SHIFT REG	69- 38
88	54LS399	S54LS399F	SIC	SHIFT REG	69- 38
89	54LS399	S54LS399F	VALG	SHIFT REG	69- 38
90	54LS399	S54LS399W	PHIN	SHIFT REG	69- 39
91	54LS399	S54LS399W	SIC	SHIFT REG	69- 39
92	54LS399	S54LS399W	VALG	SHIFT REG	69- 39
93	54LS478	SN54LS478J	TII	ROM	55- 55
94	54LS479	SN54LS479J	TII	ROM	55- 56
95	54LS574	SN54LS574J	MOTA	SHIFT REG	79- 9
96	54LS574	SN54LS574W	MOTA	SHIFT REG	79- 10
97	54LS600	SN54LS600J	TII	SPECIAL	88- 45
98	54LS601	SN54LS601J	TII	SPECIAL	88- 51
99	54LS602	SN54LS602J	TII	SPECIAL	88- 46
100	54LS603	SN54LS603J	TII	SPECIAL	88- 52
101	54LS610	SN54LS610J	TII	SPECIAL	87- 22
102	54LS611	SN54LS611J	TII	SPECIAL	87- 23
103	54LS612	SN54LS612J	TII	SPECIAL	87- 24
104	54LS613	SN54LS613J	TII	SPECIAL	87- 25
105	54LS670	54LS670DM	FSC	RAM	18- 5
106	54LS670	54LS670FM	FSC	RAM	18- 6
107	54LS670	54LS670J	RTN	RAM	18- 7
108	54LS670	54LS670W	RTN	RAM	18- 8
109	54LS670	S54LS670F	PHIN	RAM	18- 70
110	54LS670	S54LS670F	SIC	RAM	18- 70
111	54LS670	S54LS670F	VALG	RAM	18- 70
112	54LS670	S54LS670W	PHIN	RAM	18- 71
113	54LS670	S54LS670W	SIC	RAM	18- 71
114	54LS670	S54LS670W	VALG	RAM	18- 71
115	54LS670	SN54LS670J	MOTA	RAM	18- 17
116	54LS670	SN54LS670J	TII	RAM	18- 17
117	54LS670	SN54LS670W	MOTA	RAM	18- 18
118	54LS670	SN54LS670W	TII	RAM	18- 18
119	54LS673	SN54LS673J	TII	SHIFT REG	83- 68
120	54LS673	SN54LS673W	TII	SHIFT REG	83- 69
121	54LS674	SN54LS674J	TII	SHIFT REG	83- 70
122	54LS674	SN54LS674W	TII	SHIFT REG	83- 71
123	54S89	S54S89F	PHIN	RAM	20- 73
124	54S89	S54S89F	SIC	RAM	20- 73
125	54S89	S54S89F	VALG	RAM	20- 73
126	54S172	S54S172F	PHIN	RAM	18- 98
127	54S172	S54S172F	SIC	RAM	18- 98
128	54S172	S54S172N	PHIN	RAM	18- 99
129	54S172	S54S172N	SIC	RAM	18- 99
130	54S174	SN54S174J	AMD	SHIFT REG	76- 79
131	54S174	SN54S174J	TII	SHIFT REG	76- 79
132	54S174	SN54S174W	AMD	SHIFT REG	76- 80
133	54S174	SN54S174W	TII	SHIFT REG	76- 80
134	54S175	SN54S175J	AMD	SHIFT REG	73- 1
135	54S175	SN54S175J	TII	SHIFT REG	73- 1
136	54S175	SN54S175W	AMD	SHIFT REG	73- 2
137	54S175	SN54S175W	TII	SHIFT REG	73- 2
138	54S188	DM54S188J	NSC	ROM	46- 55
139	54S189	54S189FM	FSC	RAM	20- 47
140	54S189	S54S189F	PHIN	RAM	20- 57
141	54S189	S54S189F	SIC	RAM	20- 57
142	54S189	S54S189F	VALG	RAM	20- 57
143	54S189	SN54S189J	AMD	RAM	20- 10
144	54S189	SN54S189W	AMD	RAM	20- 11
145	54S194	AM54S194J	AMD	SHIFT REG	73- 5
146	54S194	AM54S194W	AMD	SHIFT REG	73- 6
147	54S194	54S194DM	FSC	SHIFT REG	72- 70
148	54S194	54S194FM	FSC	SHIFT REG	72- 71
149	54S194	RC54S194J	MULB	SHIFT REG	72- 95
150	54S194	RC54S194W	MULB	SHIFT REG	72- 96
151	54S194	S54S194J	PHIN	SHIFT REG	72- 97
152	54S194	S54S194J	SIC	SHIFT REG	72- 97
153	54S194	S54S194W	PHIN	SHIFT REG	72- 98
154	54S194	S54S194W	SIC	SHIFT REG	72- 98
155	54S194	SN54S194J	AMD	SHIFT REG	72- 99
156	54S194	SN54S194J	TII	SHIFT REG	72- 99
157	54S194	SN54S194W	AMD	SHIFT REG	72-100
158	54S194	SN54S194W	TII	SHIFT REG	72-100
159	54S195	AM54S195J	AMD	SHIFT REG	73- 7
160	54S195	AM54S195W	AMD	SHIFT REG	73- 8
161	54S195	RC54S195J	MULB	SHIFT REG	71- 68
162	54S195	RC54S195W	MULB	SHIFT REG	71- 69
163	54S195	S54S195J	PHIN	SHIFT REG	71- 76
164	54S195	S54S195J	SIC	SHIFT REG	71- 76
165	54S195	S54S195W	PHIN	SHIFT REG	71- 77
166	54S195	S54S195W	SIC	SHIFT REG	71- 77
167	54S195	SN54S195J	AMD	SHIFT REG	72- 88
168	54S195	SN54S195J	TII	SHIFT REG	72- 88
169	54S195	SN54S195W	AMD	SHIFT REG	72- 89
170	54S195	SN54S195W	TII	SHIFT REG	72- 89
171	54S200	RC54S200F	MULB	RAM	23- 28
172	54S200	SN54S200AJ	TII	RAM	23- 24
173	54S200	SN54S200AW	TII	RAM	23- 25
174	54S201	RC54S201F	MULB	RAM	22- 38
175	54S207	SN54S207J	TII	RAM	24- 43
176	54S208	SN54S208J	TII	RAM	24- 44
177	54S214	SN54S214J	TII	RAM	28- 64
178	54S281	SN54S281J	TII	SHIFT REG	72- 53
179	54S281	SN54S281W	TII	SHIFT REG	72- 54
180	54S287	DM54S287J	NSC	ROM	48- 31
181	54S288	DM54S288J	NSC	ROM	46- 54
182	54S289	54S289DM	FSC	RAM	20- 48
183	54S289	54S289FM	FSC	RAM	20- 49
184	54S289	SN54S289J	AMD	RAM	20- 12
185	54S289	SN54S289W	AMD	RAM	20- 13
186	54S299	SN54S299J	TII	SHIFT REG	79- 32
187	54S300	SN54S300AJ	TII	RAM	23- 26
188	54S300	SN54S300AW	TII	RAM	23- 27
189	54S301	RC54S301F	MULB	RAM	22- 39
190	54S301	S54S301F	PHIN	RAM	23- 31
191	54S301	S54S301F	SIC	RAM	23- 31
192	54S301	S54S301F	VALG	RAM	23- 31
193	54S301	SN54S301J	TII	RAM	22- 76
194	54S301	SN54S301W	TII	RAM	22- 77
195	54S314	SN54S314J	TII	RAM	28- 65
196	54S330	SN54S330J	TII	SPECIAL	87-108
197	54S331	SN54S331J	TII	SPECIAL	87-109
198	54S373	SN54S373J	TII	SHIFT REG	79- 37
199	54S374	SN54S374J	MMI	SHIFT REG	79- 38
200	54S374	SN54S374J	TII	SHIFT REG	79- 38
201	54S374	SN54S374J#	MMI	SHIFT REG	79- 43
202	54S387	DM54S387J	NSC	ROM	48- 32
203	54S400	SN54S400J	TII	RAM	39- 96
204	54S401	SN54S401J	TII	RAM	39- 97
205	54S452	SN54S452J	TII	ROM	58- 54
206	54S453	SN54S453J	TII	ROM	58- 55
207	54S472	DM54S472J	NSC	ROM	52- 47
208	54S473	DM54S473J	NSC	ROM	52- 48
209	54S474	DM54S474J	NSC	ROM	52- 49
210	54S474	SN54S474J	TII	ROM	52- 62
211	54S475	DM54S475J	NSC	ROM	52- 50
212	54S475	SN54S475J	TII	ROM	52- 63
213	54S476	SN54S476J	TII	ROM	53- 40
214	54S477	SN54S477J	TII	ROM	53- 41
215	54S478	SN54S478J	TII	ROM	55- 16
216	54S479	SN54S479J	TII	ROM	55- 17
217	54S570	DM54S570J	NSC	ROM	50- 44
218	54S571	DM54S571J	NSC	ROM	50- 45
219	54S572	DM54S572J	NSC	ROM	53- 71
220	54S573	DM54S573J	NSC	ROM	53- 72

SYMBOLS AND CODES EXPLAINED IN INTERPRETER

GENERIC PRODUCT INDEX

IN ORDER OF: (1)GENERIC NO. (2)MFR TYPE NO.

LINE No.	[1] GENERIC NO.	[2] MANUFACTURER TYPE NO.	MFR. CODE	PRODUCT CLASS	PAGE & LINE
1	54S2708	SN54S2708J	TII	ROM	55- 18
2	54S3708	SN54S3708J	TII	ROM	55- 19
3	61	SM61	TRW	SHIFT REG	68- 57
4	63	SM63	TRW	SHIFT REG	68- 58
5	65X08	IM65X08-1ID	INL	RAM	30- 33
6	65X08	IM65X08-1IJ	INL	RAM	30- 34
7	65X08	IM65X08-1MD	INL	RAM	30- 35
8	65X08	IM65X08-1MF	INL	RAM	30- 36
9	65X08	IM65X08-1MJ	INL	RAM	30- 37
10	65X08	IM65X08A-1ID	INL	RAM	30- 29
11	65X08	IM65X08A-1IJ	INL	RAM	30- 30
12	65X08	IM65X08A-1MD	INL	RAM	30- 44
13	65X08	IM65X08A-1MF	INL	RAM	30- 45
14	65X08	IM65X08A-1MJ	INL	RAM	30- 46
15	65X08	IM65X08AID	INL	RAM	30- 47
16	65X08	IM65X08AIJ	INL	RAM	30- 48
17	65X08	IM65X08AMD	INL	RAM	30- 49
18	65X08	IM65X08AMF	INL	RAM	30- 50
19	65X08	IM65X08AMJ	INL	RAM	30- 51
20	65X08	IM65X08CJ	INL	RAM	30- 70
21	65X08	IM65X08HJ	INL	RAM	30- 59
22	65X08	IM65X08ID	INL	RAM	30- 60
23	65X08	IM65X08IJ	INL	RAM	30- 61
24	65X08	IM65X08MD	INL	RAM	30- 62
25	65X08	IM65X08MF	INL	RAM	30- 63
26	65X08	IM65X08MJ	INL	RAM	30- 64
27	65X18	IM65X18-1ID	INL	RAM	30- 38
28	65X18	IM65X18-1IJ	INL	RAM	30- 39
29	65X18	IM65X18-1MD	INL	RAM	30- 40
30	65X18	IM65X18-1MF	INL	RAM	30- 41
31	65X18	IM65X18-1MJ	INL	RAM	30- 42
32	65X18	IM65X18A-1ID	INL	RAM	30- 31
33	65X18	IM65X18A-1IJ	INL	RAM	30- 32
34	65X18	IM65X18A-1MF	INL	RAM	30- 52
35	65X18	IM65X18A-1MJ	INL	RAM	30- 53
36	65X18	IM65X18AID	INL	RAM	30- 54
37	65X18	IM65X18AIJ	INL	RAM	30- 55
38	65X18	IM65X18AMD	INL	RAM	30- 56
39	65X18	IM65X18AMF	INL	RAM	30- 57
40	65X18	IM65X18AMJ	INL	RAM	30- 58
41	65X18	IM65X18CJ	INL	RAM	30- 71
42	65X18	IM65X18ID	INL	RAM	30- 65
43	65X18	IM65X18IJ	INL	RAM	30- 66
44	65X18	IM65X18MD	INL	RAM	30- 67
45	65X18	IM65X18MF	INL	RAM	30- 68
46	65X18	IM65X18MJ	INL	RAM	30- 69
47	66L41	MCM66L41-20C	MOTA	RAM	41- 4
48	66L41	MCM66L41-20JL	MOTA	RAM	41- 5
49	66L41	MCM66L41-20NL	MOTA	RAM	41- 6
50	66L41	MCM66L41-20P	MOTA	RAM	41- 7
51	66L41	MCM66L41-25C	MOTA	RAM	41- 30
52	66L41	MCM66L41-25JL	MOTA	RAM	41- 31
53	66L41	MCM66L41-25NL	MOTA	RAM	41- 32
54	66L41	MCM66L41-25P	MOTA	RAM	41- 33
55	66L41	MCM66L41-30C	MOTA	RAM	41- 54
56	66L41	MCM66L41-30JL	MOTA	RAM	41- 55
57	66L41	MCM66L41-30NL	MOTA	RAM	41- 56
58	66L41	MCM66L41-30P	MOTA	RAM	41- 57
59	66L41	MCM66L41-45C	MOTA	RAM	41- 87
60	66L41	MCM66L41-45JL	MOTA	RAM	41- 88
61	66L41	MCM66L41-45NL	MOTA	RAM	41- 89
62	66L41	MCM66L41-45P	MOTA	RAM	41- 90
63	68	S68A10	AMI	RAM	21-106
64	68	S68A332	AMI	ROM	59-101
65	68	S68B10	AMI	RAM	21-105
66	68	MCM68A10CL	MOTA	RAM	22- 22
67	68	MCM68A10CP	MOTA	RAM	22- 23
68	68	MCM68A10L	MOTA	RAM	22- 24
69	68	MCM68A10P	MOTA	RAM	22- 25
70	68	MCM68A30AC	MOTA	ROM	54- 84
71	68	MCM68A30AP	MOTA	ROM	54- 85
72	68	MCM68A308C	MOTA	ROM	54- 86
73	68	MCM68A308L	MOTA	ROM	54- 87
74	68	MCM68A308P	MOTA	ROM	54- 88
75	68	MCM68A316AC	MOTA	ROM	57-102
76	68	MCM68A316AP	MOTA	ROM	57-103
77	68	MCM68A316EC	MOTA	ROM	57-104
78	68	MCM68A316EP	MOTA	ROM	57-105
79	68	MCM68A332C	MOTA	ROM	59- 59
80	68	MCM68A332P	MOTA	ROM	59- 60
81	68	MCM68A364C	MOTA	ROM	60- 82
82	68	MCM68A364L	MOTA	ROM	60- 83
83	68	MCM68A364P	MOTA	ROM	60- 84
84	68	MCM68A708C	MOTA	ROM	56- 4
85	68	MCM68A708L	MOTA	ROM	56- 5
86	68	MCM68A764C	MOTA	ROM	60- 90
87	68	MCM68A764L	MOTA	ROM	60- 91
88	68	EF68A10C	THCF	RAM	22- 16
89	68	MCM68B10L	MOTA	RAM	22- 14
90	68	EF68A10CP	THCF	RAM	22- 17
91	68	MCM68B10P	MOTA	RAM	22- 15
92	68	EF68A10CV	THCF	RAM	22- 18
93	68	MCM68B30AC	MOTA	ROM	54- 78
94	68	EF68A10P	THCF	RAM	22- 19
95	68	MCM68B30AP	MOTA	ROM	54- 79
96	68	EF68B10C	THCF	RAM	22- 12
97	68	MCM68B308C	MOTA	ROM	54- 80
98	68	EF68B10P	THCF	RAM	22- 13
99	68	MCM68B308L	MOTA	ROM	54- 81
100	68	MCM68B308P	MOTA	ROM	54- 82
101	68	MCM68B364C	MOTA	ROM	60- 69
102	68	MCM68B364L	MOTA	ROM	60- 70
103	68	MCM68B364P	MOTA	ROM	60- 71
104	68L732	MCM68L732C	MOTA	ROM	60- 19
105	68L732	MCM68L732L	MOTA	ROM	60- 20
106	68L764	MCM68L764-35C	MOTA	ROM	60- 92
107	68L764	MCM68L764-35L	MOTA	ROM	60- 93
108	71	SM71	TRW	SHIFT REG	68- 59
109	73	SM73	TRW	SHIFT REG	68- 60
110	74C89	MM74C89J	NSC	RAM	20- 99
111	74C89	MM74C89N	NSC	RAM	20-100
112	74C200	MM74C200J	NSC	RAM	23- 82
113	74C200	MM74C200N	NSC	RAM	23- 83
114	74C910	MM74C910J	NSC	RAM	21- 48
115	74C910	MM74C910N	NSC	RAM	21- 49
116	74C920	MM74C920J	NSC	RAM	24-106
117	74C920	MM74C920J-3	NSC	RAM	25- 2
118	74C920	MM74C920N	NSC	RAM	24-107
119	74C920	MM74C920N-3	NSC	RAM	25- 3
120	74C921	MM74C921J	NSC	RAM	24-108
121	74C921	MM74C921J-3	NSC	RAM	25- 4
122	74C921	MM74C921N	NSC	RAM	24-109
123	74C921	MM74C921N-3	NSC	RAM	25- 5
124	74C929	MM74C929J	NSC	RAM	29- 66
125	74C929	MM74C929J-3	NSC	RAM	29-101
126	74C929	MM74C929N	NSC	RAM	29- 67
127	74C929	MM74C929N-3	NSC	RAM	29-102
128	74C930	MM74C930J	NSC	RAM	29- 68
129	74C930	MM74C930J-3	NSC	RAM	29-103
130	74C930	MM74C930N	NSC	RAM	29- 69
131	74C930	MM74C930N-3	NSC	RAM	29-104
132	74C989	MM74C989J	NSC	RAM	21- 2
133	74C989	MM74C989N	NSC	RAM	21- 3
134	74F189	74F189DC	FSC	RAM	19-102
135	74F189	74F189FC	FSC	RAM	19-103
136	74F189	74F189PC	FSC	RAM	19-104
137	74F289	74F289DC	FSC	RAM	19-105
138	74F289	74F289FC	FSC	RAM	19-106
139	74F289	74F289PC	FSC	RAM	19-107
140	74L91	ZN74L91E	FERB	SHIFT REG	82- 23
141	74L91	ZN74L91J	FERB	SHIFT REG	82- 24
142	74L91	SN74L91J	TII	SHIFT REG	82- 19
143	74L91	SN74L91N	TII	SHIFT REG	82- 20
144	74L95	ZN74L95E	FERB	SHIFT REG	66- 18
145	74L95	ZN74L95J	FERB	SHIFT REG	66- 19
146	74L95	SN74L95J	TII	SHIFT REG	66- 12
147	74L95	SN74L95N	TII	SHIFT REG	66- 13
148	74L96	ZN74L96E	FERB	SHIFT REG	74- 56
149	74L96	ZN74L96J	FERB	SHIFT REG	74- 57
150	74L96	SN74L96J	TII	SHIFT REG	74- 52
151	74L96	SN74L96N	TII	SHIFT REG	74- 53
152	74L99	SN74L99J	TII	SHIFT REG	66- 14
153	74L99	SN74L99N	TII	SHIFT REG	66- 15
154	74L164	ZN74L164E	FERB	SHIFT REG	81- 33
155	74L164	ZN74L164J	FERB	SHIFT REG	81- 34
156	74L164	SN74L164J	TII	SHIFT REG	81- 28
157	74L164	SN74L164N	TII	SHIFT REG	81- 29
158	74L164	SN74L164T	TII	SHIFT REG	81- 30
159	74LS89	74LS89DC	FSC	RAM	19- 67
160	74LS89	74LS89FC	FSC	RAM	19- 68
161	74LS89	74LS89PC	FSC	RAM	19- 69
162	74LS89	SN74LS89J	MOTA	RAM	19- 84
163	74LS89	SN74LS89N	MOTA	RAM	19- 85
164	74LS89	SN74LS89W	MOTA	RAM	19- 86
165	74LS91	74LS91J	RTN	SHIFT REG	82- 27
166	74LS91	74LS91W	RTN	SHIFT REG	82- 28
167	74LS91	M74LS91P	MITJ	SHIFT REG	82- 36
168	74LS91	SN74LS91J	TII	SHIFT REG	82- 48
169	74LS91	SN74LS91N	TII	SHIFT REG	82- 49
170	74LS91	HD74LS91	HITJ	SHIFT REG	82- 65
171	74LS91	HD74LS91P	HITJ	SHIFT REG	82- 66
172	74LS95	74LS95BDC	FSC	SHIFT REG	70- 71
173	74LS95	74LS95BFC	FSC	SHIFT REG	70- 72
174	74LS95	74LS95BJ	RTN	SHIFT REG	68- 28
175	74LS95	74LS95BPC	FSC	SHIFT REG	70- 73
176	74LS95	74LS95BW	RTN	SHIFT REG	68- 29
177	74LS95	N74LS95BF	PHIN	SHIFT REG	69- 21
178	74LS95	N74LS95BF	SIC	SHIFT REG	69- 21
179	74LS95	N74LS95BF	VALG	SHIFT REG	69- 21
180	74LS95	N74LS95BN	PHIN	SHIFT REG	69- 22
181	74LS95	N74LS95BN	SIC	SHIFT REG	69- 22
182	74LS95	N74LS95BN	VALG	SHIFT REG	69- 22
183	74LS95	M74LS95BP	MITJ	SHIFT REG	72- 29
184	74LS95	SN74LS95AJ	TII	SHIFT REG	70- 50
185	74LS95	SN74LS95AN	TII	SHIFT REG	70- 51
186	74LS95	SN74LS95AW	TII	SHIFT REG	70- 52
187	74LS95	SN74LS95BJ	MOTA	SHIFT REG	71- 20
188	74LS95	SN74LS95BJ	TII	SHIFT REG	71- 20
189	74LS95	SN74LS95BN	MOTA	SHIFT REG	71- 21
190	74LS95	SN74LS95BN	TII	SHIFT REG	71- 21
191	74LS95	SN74LS95BW	MOTA	SHIFT REG	71- 22
192	74LS95	HD74LS95B	HITJ	SHIFT REG	65- 22
193	74LS95	HD74LS95BP	HITJ	SHIFT REG	65- 23
194	74LS96	N74LS96F	PHIN	SHIFT REG	75- 6
195	74LS96	N74LS96F	SIC	SHIFT REG	75- 6
196	74LS96	N74LS96F	VALG	SHIFT REG	75- 6
197	74LS96	N74LS96N	PHIN	SHIFT REG	75- 7
198	74LS96	N74LS96N	SIC	SHIFT REG	75- 7
199	74LS96	N74LS96N	VALG	SHIFT REG	75- 7
200	74LS96	M74LS96P	MITJ	SHIFT REG	74- 73
201	74LS96	SN74LS96J	TII	SHIFT REG	74- 86
202	74LS96	SN74LS96N	TII	SHIFT REG	74- 87
203	74LS164	74LS164DC	FSC	SHIFT REG	81- 56
204	74LS164	74LS164FC	FSC	SHIFT REG	81- 57
205	74LS164	74LS164PC	FSC	SHIFT REG	81- 58
206	74LS164	N74LS164F	PHIN	SHIFT REG	81- 66
207	74LS164	N74LS164F	SIC	SHIFT REG	81- 66
208	74LS164	N74LS164F	VALG	SHIFT REG	81- 66
209	74LS164	N74LS164N	PHIN	SHIFT REG	81- 67
210	74LS164	N74LS164N	SIC	SHIFT REG	81- 67
211	74LS164	N74LS164N	VALG	SHIFT REG	81- 67
212	74LS164	M74LS164P	MITJ	SHIFT REG	78- 99
213	74LS164	SN74LS164J	AMD	SHIFT REG	81- 72
214	74LS164	SN74LS164J	MOTA	SHIFT REG	81- 72
215	74LS164	SN74LS164J	TII	SHIFT REG	81- 72
216	74LS164	SN74LS164N	AMD	SHIFT REG	81- 73
217	74LS164	SN74LS164N	MOTA	SHIFT REG	81- 73
218	74LS164	SN74LS164N	TII	SHIFT REG	81- 73
219	74LS164	SN74LS164W	MOTA	SHIFT REG	81- 74
220	74LS164	HD74LS164	HITJ	SHIFT REG	81- 64

SYMBOLS AND CODES EXPLAINED IN INTERPRETER

GENERIC PRODUCT INDEX

IN ORDER OF: (1)GENERIC NO. (2)MFR TYPE NO.

LINE No.	1 GENERIC NO.	2 MANUFACTURER TYPE NO.	MFR. CODE	PRODUCT CLASS	PAGE & LINE
1	74LS164	HD74LS164P	HITJ	SHIFT REG	81- 65
2	74LS165	74LS165DC	FSC	SHIFT REG	80- 92
3	74LS165	74LS165FC	FSC	SHIFT REG	80- 93
4	74LS165	74LS165PC	FSC	SHIFT REG	80- 94
5	74LS165	SN74LS165J	MOTA	SHIFT REG	80- 97
6	74LS165	SN74LS165J	TII	SHIFT REG	80- 97
7	74LS165	SN74LS165N	MOTA	SHIFT REG	80- 98
8	74LS165	SN74LS165N	TII	SHIFT REG	80- 98
9	74LS165	SN74LS165W	MOTA	SHIFT REG	80- 99
10	74LS166	SN74LS166J	TII	SHIFT REG	80- 75
11	74LS166	SN74LS166N	TII	SHIFT REG	80- 76
12	74LS166	HD74LS166	HITJ	SHIFT REG	82- 63
13	74LS166	HD74LS166P	HITJ	SHIFT REG	82- 64
14	74LS170	74LS170DC	FSC	RAM	18- 9
15	74LS170	74LS170FC	FSC	RAM	18- 10
16	74LS170	74LS170PC	FSC	RAM	18- 11
17	74LS170	N74LS170B	MULB	RAM	18- 54
18	74LS170	N74LS170B	PHIN	RAM	18- 54
19	74LS170	N74LS170B	SIC	RAM	18- 54
20	74LS170	N74LS170F	MULB	RAM	18- 55
21	74LS170	N74LS170F	PHIN	RAM	18- 55
22	74LS170	N74LS170F	SIC	RAM	18- 55
23	74LS170	N74LS170F	VALG	RAM	18- 55
24	74LS170	N74LS170N	PHIN	RAM	18- 25
25	74LS170	N74LS170N	SIC	RAM	18- 25
26	74LS170	N74LS170N	VALG	RAM	18- 25
27	74LS170	M74LS170P	MITJ	RAM	18- 50
28	74LS170	SN74LS170J	MOTA	RAM	18- 19
29	74LS170	SN74LS170J	TII	RAM	18- 19
30	74LS170	SN74LS170N	MOTA	RAM	18- 20
31	74LS170	SN74LS170N	TII	RAM	18- 20
32	74LS170	SN74LS170W	MOTA	RAM	18- 21
33	74LS173	M74LS173AP	MITJ	SHIFT REG	70- 97
34	74LS173	M74LS173P	MITJ	SHIFT REG	70- 98
35	74LS174	N74LS174B	MULB	SHIFT REG	76- 56
36	74LS174	N74LS174B	PHIN	SHIFT REG	76- 56
37	74LS174	N74LS174B	SIC	SHIFT REG	76- 56
38	74LS174	N74LS174F	MULB	SHIFT REG	76- 57
39	74LS174	N74LS174F	PHIN	SHIFT REG	76- 57
40	74LS174	N74LS174F	SIC	SHIFT REG	76- 57
41	74LS174	N74LS174N	PHIN	SHIFT REG	76- 41
42	74LS174	SN74LS174J	MOTA	SHIFT REG	76- 50
43	74LS174	SN74LS174J	TII	SHIFT REG	76- 50
44	74LS174	SN74LS174N	MOTA	SHIFT REG	76- 51
45	74LS174	SN74LS174N	TII	SHIFT REG	76- 51
46	74LS174	SN74LS174W	MOTA	SHIFT REG	76- 52
47	74LS175	N74LS175B	MULB	SHIFT REG	71- 55
48	74LS175	N74LS175B	PHIN	SHIFT REG	71- 55
49	74LS175	N74LS175B	SIC	SHIFT REG	71- 55
50	74LS175	N74LS175F	MULB	SHIFT REG	71- 56
51	74LS175	N74LS175F	PHIN	SHIFT REG	71- 56
52	74LS175	N74LS175F	SIC	SHIFT REG	71- 56
53	74LS175	N74LS175N	PHIN	SHIFT REG	71-106
54	74LS175	N74LS175N	SIC	SHIFT REG	71-106
55	74LS175	N74LS175N	VALG	SHIFT REG	71-106
56	74LS175	SN74LS175J	MOTA	SHIFT REG	71- 23
57	74LS175	SN74LS175J	TII	SHIFT REG	71- 23
58	74LS175	SN74LS175N	MOTA	SHIFT REG	71- 24
59	74LS175	SN74LS175N	TII	SHIFT REG	71- 24
60	74LS175	SN74LS175W	MOTA	SHIFT REG	71- 25
61	74LS189	74LS189DC	FSC	RAM	20- 39
62	74LS189	74LS189FC	FSC	RAM	20- 40
63	74LS189	74LS189PC	FSC	RAM	20- 41
64	74LS189	SN74LS189J	MOTA	RAM	19- 87
65	74LS189	SN74LS189J	TII	RAM	19- 87
66	74LS189	SN74LS189N	MOTA	RAM	19- 88
67	74LS189	SN74LS189N	TII	RAM	19- 88
68	74LS189	SN74LS189W	MOTA	RAM	19- 89
69	74LS194	74LS194ADC	FSC	SHIFT REG	70- 74
70	74LS194	74LS194AFC	FSC	SHIFT REG	70- 75
71	74LS194	74LS194AJ	RTN	SHIFT REG	70- 76
72	74LS194	74LS194APC	FSC	SHIFT REG	70- 77
73	74LS194	74LS194AW	RTN	SHIFT REG	70- 78
74	74LS194	N74LS194AF	PHIN	SHIFT REG	69- 23
75	74LS194	N74LS194AF	SIC	SHIFT REG	69- 23
76	74LS194	N74LS194AF	VALG	SHIFT REG	69- 23
77	74LS194	N74LS194AN	PHIN	SHIFT REG	69- 24
78	74LS194	N74LS194AN	SIC	SHIFT REG	69- 24
79	74LS194	N74LS194AN	VALG	SHIFT REG	69- 24
80	74LS194	M74LS194AP	MITJ	SHIFT REG	72- 30
81	74LS194	HD74LS194A	HITJ	SHIFT REG	65- 24
82	74LS194	HD74LS194AP	HITJ	SHIFT REG	65- 25
83	74LS194	SN74LS194AJ	AMD	SHIFT REG	71- 26
84	74LS194	SN74LS194AJ	MOTA	SHIFT REG	71- 26
85	74LS194	SN74LS194AJ	TII	SHIFT REG	71- 26
86	74LS194	SN74LS194AN	AMD	SHIFT REG	71- 27
87	74LS194	SN74LS194AN	MOTA	SHIFT REG	71- 27
88	74LS194	SN74LS194AN	TII	SHIFT REG	71- 27
89	74LS194	SN74LS194AW	MOTA	SHIFT REG	71- 28
90	74LS195	74LS195ADC	FSC	SHIFT REG	70- 79
91	74LS195	74LS195AFC	FSC	SHIFT REG	70- 80
92	74LS195	74LS195AJ	RTN	SHIFT REG	70- 81
93	74LS195	74LS195APC	FSC	SHIFT REG	70- 82
94	74LS195	74LS195AW	RTN	SHIFT REG	70- 83
95	74LS195	N74LS195AF	PHIN	SHIFT REG	70-100
96	74LS195	N74LS195AF	SIC	SHIFT REG	70-100
97	74LS195	N74LS195AF	VALG	SHIFT REG	70-100
98	74LS195	N74LS195AN	PHIN	SHIFT REG	70-101
99	74LS195	N74LS195AN	SIC	SHIFT REG	70-101
100	74LS195	N74LS195AN	VALG	SHIFT REG	70-101
101	74LS195	M74LS195AP	MITJ	SHIFT REG	72- 31
102	74LS195	HD74LS195A	HITJ	SHIFT REG	70- 95
103	74LS195	HD74LS195AP	HITJ	SHIFT REG	70- 96
104	74LS195	SN74LS195AJ	AMD	SHIFT REG	71- 29
105	74LS195	SN74LS195AJ	MOTA	SHIFT REG	71- 29
106	74LS195	SN74LS195AJ	TII	SHIFT REG	71- 29
107	74LS195	SN74LS195AN	AMD	SHIFT REG	71- 30
108	74LS195	SN74LS195AN	MOTA	SHIFT REG	71- 30
109	74LS195	SN74LS195AN	TII	SHIFT REG	71- 30
110	74LS195	SN74LS195AW	MOTA	SHIFT REG	71- 31
111	74LS200	SN74LS200AJ	TII	RAM	22-107
112	74LS200	SN74LS200AN	TII	RAM	22-108
113	74LS202	SN74LS202J	TII	RAM	22- 86
114	74LS202	SN74LS202N	TII	RAM	22- 87
115	74LS207	SN74LS207J	TII	RAM	24- 51
116	74LS207	SN74LS207N	TII	RAM	24- 52
117	74LS208	SN74LS208J	TII	RAM	24- 53
118	74LS208	SN74LS208N	TII	RAM	24- 54
119	74LS214	SN74LS214J	TII	RAM	28- 70
120	74LS214	SN74LS214N	TII	RAM	28- 71
121	74LS215	SN74LS215J	TII	RAM	28- 66
122	74LS215	SN74LS215N	TII	RAM	28- 67
123	74LS219	SN74LS219J	TII	RAM	19- 90
124	74LS219	SN74LS219N	TII	RAM	19- 91
125	74LS273	SN74LS273J	MOTA	SHIFT REG	78- 68
126	74LS273	SN74LS273J	TII	SHIFT REG	78- 68
127	74LS273	SN74LS273N	AMD	SHIFT REG	78- 69
128	74LS273	SN74LS273N	MOTA	SHIFT REG	78- 69
129	74LS273	SN74LS273N	TII	SHIFT REG	78- 69
130	74LS273	SN74LS273W	MOTA	SHIFT REG	78- 70
131	74LS273	74LS273PC	FSC	SHIFT REG	78- 38
132	74LS273	N74LS273F	PHIN	SHIFT REG	78- 57
133	74LS273	N74LS273F	SIC	SHIFT REG	78- 57
134	74LS273	N74LS273F	VALG	SHIFT REG	78- 57
135	74LS273	N74LS273N	PHIN	SHIFT REG	78- 58
136	74LS273	N74LS273N	SIC	SHIFT REG	78- 58
137	74LS273	N74LS273N	VALG	SHIFT REG	78- 58
138	74LS273	SN74LS273J	AMD	SHIFT REG	78- 68
139	74LS289	SN74LS289J	MOTA	RAM	19- 92
140	74LS289	SN74LS289J	TII	RAM	19- 92
141	74LS289	SN74LS289N	MOTA	RAM	19- 93
142	74LS289	SN74LS289N	TII	RAM	19- 93
143	74LS289	SN74LS289W	MOTA	RAM	19- 94
144	74LS289	74LS289DC	FSC	RAM	20- 42
145	74LS289	74LS289FC	FSC	RAM	20- 43
146	74LS289	74LS289PC	FSC	RAM	20- 44
147	74LS289	N74LS289F	PHIN	RAM	19- 70
148	74LS289	N74LS289F	SIC	RAM	19- 70
149	74LS289	N74LS289F	VALG	RAM	19- 70
150	74LS289	N74LS289N	PHIN	RAM	19- 71
151	74LS289	N74LS289N	SIC	RAM	19- 71
152	74LS289	N74LS289N	VALG	RAM	19- 71
153	74LS295	SN74LS295AJ	MOTA	SHIFT REG	71- 32
154	74LS295	SN74LS295AJ	TII	SHIFT REG	71- 32
155	74LS295	SN74LS295AN	MOTA	SHIFT REG	71- 33
156	74LS295	SN74LS295AN	TII	SHIFT REG	71- 33
157	74LS295	SN74LS295AW	MOTA	SHIFT REG	71- 34
158	74LS295	SN74LS295BJ	TII	SHIFT REG	69- 44
159	74LS295	SN74LS295BN	TII	SHIFT REG	69- 45
160	74LS295	74LS295ADC	FSC	SHIFT REG	70- 84
161	74LS295	74LS295AFC	FSC	SHIFT REG	70- 85
162	74LS295	74LS295AJ	RTN	SHIFT REG	70- 86
163	74LS295	74LS295APC	FSC	SHIFT REG	70- 87
164	74LS295	74LS295AW	RTN	SHIFT REG	70- 88
165	74LS295	N74LS295BF	SIC	SHIFT REG	70-102
166	74LS295	N74LS295BF	VALG	SHIFT REG	70-102
167	74LS295	N74LS295BN	PHIN	SHIFT REG	70-103
168	74LS295	N74LS295BN	SIC	SHIFT REG	70-103
169	74LS295	N74LS295BN	VALG	SHIFT REG	70-103
170	74LS295	M74LS295AP	MITJ	SHIFT REG	72- 40
171	74LS295	HD74LS295B	HITJ	SHIFT REG	68- 30
172	74LS295	HD74LS295BP	HITJ	SHIFT REG	68- 31
173	74LS298	N74LS298F	PHIN	SHIFT REG	69- 25
174	74LS298	N74LS298F	SIC	SHIFT REG	69- 25
175	74LS298	N74LS298F	VALG	SHIFT REG	69- 25
176	74LS298	N74LS298N	PHIN	SHIFT REG	69- 26
177	74LS298	N74LS298N	SIC	SHIFT REG	69- 26
178	74LS298	N74LS298N	VALG	SHIFT REG	69- 26
179	74LS299	SN74LS299J	AMD	SHIFT REG	78- 71
180	74LS299	SN74LS299J	MOTA	SHIFT REG	78- 71
181	74LS299	SN74LS299J	TII	SHIFT REG	78- 71
182	74LS299	SN74LS299N	AMD	SHIFT REG	78- 72
183	74LS299	SN74LS299N	MOTA	SHIFT REG	78- 72
184	74LS299	SN74LS299N	TII	SHIFT REG	78- 72
185	74LS299	SN74LS299W	MOTA	SHIFT REG	79- 11
186	74LS299	74LS299DC	FSC	SHIFT REG	79- 27
187	74LS299	74LS299FC	FSC	SHIFT REG	79- 28
188	74LS299	74LS299PC	FSC	SHIFT REG	78- 91
189	74LS299	N74LS299F	PHIN	SHIFT REG	78-101
190	74LS299	N74LS299F	SIC	SHIFT REG	78-101
191	74LS299	N74LS299F	VALG	SHIFT REG	78-101
192	74LS299	N74LS299N	PHIN	SHIFT REG	78-102
193	74LS299	N74LS299N	SIC	SHIFT REG	78-102
194	74LS299	N74LS299N	VALG	SHIFT REG	78-102
195	74LS299	M74LS299P	MITJ	SHIFT REG	78- 56
196	74LS299	HD74LS299	HITJ	SHIFT REG	76-100
197	74LS299	HD74LS299P	HITJ	SHIFT REG	76-101
198	74LS300	SN74LS300AJ	TII	RAM	22-109
199	74LS300	SN74LS300AN	TII	RAM	22-110
200	74LS302	SN74LS302J	TII	RAM	22- 88
201	74LS302	SN74LS302N	TII	RAM	22- 89
202	74LS314	SN74LS314J	TII	RAM	28- 72
203	74LS314	SN74LS314N	TII	RAM	28- 73
204	74LS315	SN74LS315J	TII	RAM	28- 68
205	74LS315	SN74LS315N	TII	RAM	28- 69
206	74LS319	SN74LS319J	TII	RAM	19- 95
207	74LS319	SN74LS319N	TII	RAM	19- 96
208	74LS322	SN74LS322J	AMD	SHIFT REG	79- 12
209	74LS322	SN74LS322J	MOTA	SHIFT REG	79- 12
210	74LS322	SN74LS322J	TII	SHIFT REG	79- 12
211	74LS322	SN74LS322N	AMD	SHIFT REG	79- 13
212	74LS322	SN74LS322N	MOTA	SHIFT REG	79- 13
213	74LS322	SN74LS322N	TII	SHIFT REG	79- 13
214	74LS322	SN74LS322W	MOTA	SHIFT REG	79- 14
215	74LS322	74LS322DC	FSC	SHIFT REG	78- 92
216	74LS322	74LS322FC	FSC	SHIFT REG	78- 93
217	74LS322	74LS322PC	FSC	SHIFT REG	78- 94
218	74LS323	SN74LS323J	AMD	SHIFT REG	79- 15
219	74LS323	SN74LS323J	MOTA	SHIFT REG	79- 15
220	74LS323	SN74LS323J	TII	SHIFT REG	79- 15

SYMBOLS AND CODES EXPLAINED IN INTERPRETER

GENERIC PRODUCT INDEX

IN ORDER OF: (1)GENERIC NO. (2)MFR TYPE NO.

LINE No.	[1] GENERIC NO.	[2] MANUFACTURER TYPE NO.	MFR. CODE	PRODUCT CLASS	PAGE & LINE
1	74LS323	SN74LS323N	AMD	SHIFT REG	79- 16
2	74LS323	SN74LS323N	MOTA	SHIFT REG	79- 16
3	74LS323	SN74LS323N	TII	SHIFT REG	79- 16
4	74LS323	SN74LS323W	MOTA	SHIFT REG	79- 17
5	74LS323	74LS323DC	FSC	SHIFT REG	78- 95
6	74LS323	74LS323FC	FSC	SHIFT REG	77- 88
7	74LS323	74LS323PC	FSC	SHIFT REG	78- 96
8	74LS323	N74LS323F	PHIN	SHIFT REG	78-103
9	74LS323	N74LS323F	SIC	SHIFT REG	78-103
10	74LS323	N74LS323F	VALG	SHIFT REG	78-103
11	74LS323	N74LS323N	PHIN	SHIFT REG	78-104
12	74LS323	N74LS323N	SIC	SHIFT REG	78-104
13	74LS323	N74LS323N	VALG	SHIFT REG	78-104
14	74LS323	M74LS323P	MITJ	SHIFT REG	78-100
15	74LS364	N74LS364F	PHIN	SHIFT REG	78-105
16	74LS364	N74LS364F	SIC	SHIFT REG	78-105
17	74LS364	N74LS364F	VALG	SHIFT REG	78-105
18	74LS373	SN74LS373J	TII	SHIFT REG	79- 18
19	74LS373	SN74LS373N	TII	SHIFT REG	79- 19
20	74LS374	SN74LS374J	AMD	SHIFT REG	79- 20
21	74LS374	SN74LS374J	MOTA	SHIFT REG	79- 20
22	74LS374	SN74LS374J	TII	SHIFT REG	79- 20
23	74LS374	SN74LS374N	AMD	SHIFT REG	79- 21
24	74LS374	SN74LS374N	MOTA	SHIFT REG	79- 21
25	74LS374	SN74LS374N	TII	SHIFT REG	79- 21
26	74LS374	SN74LS374W	MOTA	SHIFT REG	79- 22
27	74LS374	74LS374PC	FSC	SHIFT REG	78- 97
28	74LS374	N74LS374F	PHIN	SHIFT REG	78-106
29	74LS374	N74LS374F	SIC	SHIFT REG	78-106
30	74LS374	N74LS374F	VALG	SHIFT REG	78-106
31	74LS374	N74LS374N	PHIN	SHIFT REG	78-107
32	74LS374	N74LS374N	SIC	SHIFT REG	78-107
33	74LS374	N74LS374N	VALG	SHIFT REG	78-107
34	74LS377	SN74LS377J	AMD	SHIFT REG	78- 73
35	74LS377	SN74LS377J	MOTA	SHIFT REG	78- 73
36	74LS377	SN74LS377J	TII	SHIFT REG	78- 73
37	74LS377	SN74LS377N	AMD	SHIFT REG	78- 74
38	74LS377	SN74LS377N	MOTA	SHIFT REG	78- 74
39	74LS377	SN74LS377N	TII	SHIFT REG	78- 74
40	74LS377	SN74LS377W	MOTA	SHIFT REG	78- 75
41	74LS377	74LS377PC	FSC	SHIFT REG	78- 39
42	74LS377	N74LS377F	PHIN	SHIFT REG	78- 59
43	74LS377	N74LS377F	SIC	SHIFT REG	78- 59
44	74LS377	N74LS377F	VALG	SHIFT REG	78- 59
45	74LS377	N74LS377N	PHIN	SHIFT REG	78- 60
46	74LS377	N74LS377N	SIC	SHIFT REG	78- 60
47	74LS377	N74LS377N	VALG	SHIFT REG	78- 60
48	74LS378	SN74LS378J	MOTA	SHIFT REG	76- 53
49	74LS378	SN74LS378J	TII	SHIFT REG	76- 53
50	74LS378	SN74LS378N	MOTA	SHIFT REG	76- 54
51	74LS378	SN74LS378N	TII	SHIFT REG	76- 54
52	74LS378	SN74LS378W	MOTA	SHIFT REG	76- 55
53	74LS378	74LS378DC	FSC	SHIFT REG	76- 38
54	74LS378	74LS378FC	FSC	SHIFT REG	76- 39
55	74LS378	74LS378PC	FSC	SHIFT REG	76- 40
56	74LS378	N74LS378F	PHIN	SHIFT REG	76- 42
57	74LS378	N74LS378F	SIC	SHIFT REG	76- 42
58	74LS378	N74LS378F	VALG	SHIFT REG	76- 42
59	74LS378	N74LS378N	PHIN	SHIFT REG	76- 43
60	74LS378	N74LS378N	SIC	SHIFT REG	76- 43
61	74LS378	N74LS378N	VALG	SHIFT REG	76- 43
62	74LS379	SN74LS379J	MOTA	SHIFT REG	71- 35
63	74LS379	SN74LS379J	TII	SHIFT REG	71- 35
64	74LS379	SN74LS379N	MOTA	SHIFT REG	71- 36
65	74LS379	SN74LS379N	TII	SHIFT REG	71- 36
66	74LS379	SN74LS379W	MOTA	SHIFT REG	71- 37
67	74LS379	74LS379DC	FSC	SHIFT REG	70- 89
68	74LS379	74LS379FC	FSC	SHIFT REG	70- 90
69	74LS379	74LS379PC	FSC	SHIFT REG	70- 91
70	74LS379	N74LS379F	PHIN	SHIFT REG	70-104
71	74LS379	N74LS379F	SIC	SHIFT REG	70-104
72	74LS379	N74LS379F	VALG	SHIFT REG	70-104
73	74LS379	N74LS379N	PHIN	SHIFT REG	70-105
74	74LS379	N74LS379N	SIC	SHIFT REG	70-105
75	74LS379	N74LS379N	VALG	SHIFT REG	70-105
76	74LS395	SN74LS395AJ	TII	SHIFT REG	69- 46
77	74LS395	SN74LS395AN	TII	SHIFT REG	69- 47
78	74LS395	SN74LS395J	MOTA	SHIFT REG	71- 38
79	74LS395	SN74LS395J	TII	SHIFT REG	71- 38
80	74LS395	SN74LS395N	MOTA	SHIFT REG	71- 39
81	74LS395	SN74LS395N	TII	SHIFT REG	71- 39
82	74LS395	SN74LS395W	MOTA	SHIFT REG	71- 40
83	74LS395	74LS395DC	FSC	SHIFT REG	70- 92
84	74LS395	74LS395FC	FSC	SHIFT REG	70- 93
85	74LS395	74LS395PC	FSC	SHIFT REG	70- 94
86	74LS395	N74LS395AF	PHIN	SHIFT REG	70-106
87	74LS395	N74LS395AF	SIC	SHIFT REG	70-106
88	74LS395	N74LS395AF	VALG	SHIFT REG	70-106
89	74LS395	N74LS395AN	PHIN	SHIFT REG	70-107
90	74LS395	N74LS395AN	SIC	SHIFT REG	70-107
91	74LS395	N74LS395AN	VALG	SHIFT REG	70-107
92	74LS395	M74LS395P	MITJ	SHIFT REG	70- 99
93	74LS396	SN74LS396J	TII	SHIFT REG	73- 72
94	74LS396	SN74LS396N	TII	SHIFT REG	73- 73
95	74LS398	N74LS398F	PHIN	SHIFT REG	69- 27
96	74LS398	N74LS398F	SIC	SHIFT REG	69- 27
97	74LS398	N74LS398F	VALG	SHIFT REG	69- 27
98	74LS398	N74LS398N	PHIN	SHIFT REG	69- 28
99	74LS398	N74LS398N	SIC	SHIFT REG	69- 28
100	74LS398	N74LS398N	VALG	SHIFT REG	69- 28
101	74LS399	N74LS399F	PHIN	SHIFT REG	69- 29
102	74LS399	N74LS399F	SIC	SHIFT REG	69- 29
103	74LS399	N74LS399F	VALG	SHIFT REG	69- 29
104	74LS399	N74LS399N	PHIN	SHIFT REG	69- 30
105	74LS399	N74LS399N	SIC	SHIFT REG	69- 30
106	74LS399	N74LS399N	VALG	SHIFT REG	69- 30
107	74LS479	SN74LS479J	TII	ROM	53-100
108	74LS479	SN74LS479N	TII	ROM	53-101
109	74LS574	SN74LS574J	MOTA	SHIFT REG	79- 23
110	74LS574	SN74LS574N	MOTA	SHIFT REG	79- 24
111	74LS574	SN74LS574W	MOTA	SHIFT REG	79- 25
112	74LS574	74LS574PC	FSC	SHIFT REG	78- 98
113	74LS600	SN74LS600J	TII	SPECIAL	88- 47
114	74LS600	SN74LS600N	TII	SPECIAL	88- 48
115	74LS601	SN74LS601J	TII	SPECIAL	88- 53
116	74LS601	SN74LS601N	TII	SPECIAL	88- 54
117	74LS602	SN74LS602J	TII	SPECIAL	88- 49
118	74LS602	SN74LS602N	TII	SPECIAL	88- 50
119	74LS603	SN74LS603J	TII	SPECIAL	88- 55
120	74LS603	SN74LS603N	TII	SPECIAL	88- 56
121	74LS610	SN74LS610J	TII	SPECIAL	87- 26
122	74LS610	SN74LS610N	TII	SPECIAL	87- 27
123	74LS611	SN74LS611J	TII	SPECIAL	87- 28
124	74LS611	SN74LS611N	TII	SPECIAL	87- 29
125	74LS612	SN74LS612J	TII	SPECIAL	87- 30
126	74LS612	SN74LS612N	TII	SPECIAL	87- 31
127	74LS613	SN74LS613J	TII	SPECIAL	87- 32
128	74LS613	SN74LS613N	TII	SPECIAL	87- 33
129	74LS630	M74LS630P	MITJ	RAM	18- 51
130	74LS670	SN74LS670J	MOTA	RAM	18- 22
131	74LS670	SN74LS670J	TII	RAM	18- 22
132	74LS670	SN74LS670N	MOTA	RAM	18- 23
133	74LS670	SN74LS670N	TII	RAM	18- 23
134	74LS670	SN74LS670W	MOTA	RAM	18- 24
135	74LS670	74LS670DC	FSC	RAM	18- 12
136	74LS670	74LS670FC	FSC	RAM	18- 13
137	74LS670	74LS670PC	FSC	RAM	18- 14
138	74LS670	N74LS670B	MULB	RAM	18- 68
139	74LS670	N74LS670B	PHIN	RAM	18- 68
140	74LS670	N74LS670B	SIC	RAM	18- 68
141	74LS670	N74LS670F	MULB	RAM	18- 69
142	74LS670	N74LS670F	PHIN	RAM	18- 69
143	74LS670	N74LS670F	SIC	RAM	18- 69
144	74LS670	N74LS670F	VALG	RAM	18- 69
145	74LS670	N74LS670N	PHIN	RAM	18- 26
146	74LS670	N74LS670N	SIC	RAM	18- 26
147	74LS670	N74LS670N	VALG	RAM	18- 26
148	74LS670	M74LS670P	MITJ	SHIFT REG	74- 43
149	74LS673	SN74LS673J	TII	SHIFT REG	83- 74
150	74LS673	SN74LS673N	TII	SHIFT REG	83- 75
151	74LS674	SN74LS674J	TII	SHIFT REG	83- 72
152	74LS674	SN74LS674N	TII	SHIFT REG	83- 73
153	74S89	N74S89F	MULB	RAM	20- 51
154	74S89	N74S89F	PHIN	RAM	20- 51
155	74S89	N74S89F	SIC	RAM	20- 51
156	74S89	N74S89F	VALG	RAM	20- 51
157	74S89	N74S89N	MULB	RAM	20- 52
158	74S89	N74S89N	PHIN	RAM	20- 52
159	74S89	N74S89N	SIC	RAM	20- 52
160	74S89	N74S89N	VALG	RAM	20- 52
161	74S172	N74S172F	MULB	RAM	18-102
162	74S172	N74S172F	PHIN	RAM	18-102
163	74S172	N74S172F	SIC	RAM	18-102
164	74S172	N74S172F	VALG	RAM	18-102
165	74S172	N74S172N	MULB	RAM	18-103
166	74S172	N74S172N	PHIN	RAM	18-103
167	74S172	N74S172N	SIC	RAM	18-103
168	74S172	N74S172N	VALG	RAM	18-103
169	74S174	SN74S174J	AMD	SHIFT REG	76- 81
170	74S174	SN74S174J	TII	SHIFT REG	76- 81
171	74S174	SN74S174N	AMD	SHIFT REG	76- 82
172	74S174	SN74S174N	TII	SHIFT REG	76- 82
173	74S174	N74S174F	PHIN	SHIFT REG	75- 95
174	74S174	N74S174F	SIC	SHIFT REG	75- 95
175	74S174	N74S174F	VALG	SHIFT REG	75- 95
176	74S174	N74S174N	PHIN	SHIFT REG	75- 96
177	74S174	N74S174N	SIC	SHIFT REG	75- 96
178	74S174	N74S174N	VALG	SHIFT REG	75- 96
179	74S175	SN74S175J	AMD	SHIFT REG	73- 3
180	74S175	SN74S175J	TII	SHIFT REG	73- 3
181	74S175	SN74S175N	AMD	SHIFT REG	73- 4
182	74S175	SN74S175N	TII	SHIFT REG	73- 4
183	74S175	N74S175F	PHIN	SHIFT REG	72- 51
184	74S175	N74S175F	SIC	SHIFT REG	72- 51
185	74S175	N74S175F	VALG	SHIFT REG	72- 51
186	74S175	N74S175N	PHIN	SHIFT REG	72- 52
187	74S175	N74S175N	SIC	SHIFT REG	72- 52
188	74S175	N74S175N	VALG	SHIFT REG	72- 52
189	74S178	N74S178A	MULB	SHIFT REG	72- 62
190	74S178	N74S178A	PHIN	SHIFT REG	72- 62
191	74S178	N74S178A	SIC	SHIFT REG	72- 62
192	74S178	N74S178F	MULB	SHIFT REG	72- 63
193	74S178	N74S178F	PHIN	SHIFT REG	72- 63
194	74S178	N74S178F	SIC	SHIFT REG	72- 63
195	74S179	N74S179B	MULB	SHIFT REG	72- 64
196	74S179	N74S179B	PHIN	SHIFT REG	72- 64
197	74S179	N74S179B	SIC	SHIFT REG	72- 64
198	74S179	N74S179F	MULB	SHIFT REG	72- 65
199	74S179	N74S179F	PHIN	SHIFT REG	72- 65
200	74S179	N74S179F	SIC	SHIFT REG	72- 65
201	74S188	DM74S188J	NSC	ROM	46- 48
202	74S188	DM74S188N	NSC	ROM	46- 49
203	74S189	SN74S189J	AMD	RAM	20- 14
204	74S189	SN74S189N	AMD	RAM	20- 15
205	74S189	74S189DC	FSC	RAM	20- 20
206	74S189	74S189FC	FSC	RAM	20- 21
207	74S189	74S189PC	FSC	RAM	20- 22
208	74S189	N74S189F	PHIN	RAM	20- 28
209	74S189	N74S189F	SIC	RAM	20- 28
210	74S189	N74S189F	VALG	RAM	20- 28
211	74S189	N74S189N	PHIN	RAM	20- 29
212	74S189	N74S189N	SIC	RAM	20- 29
213	74S189	N74S189N	VALG	RAM	20- 29
214	74S194	AM74S194J	AMD	SHIFT REG	73- 9
215	74S194	AM74S194N	AMD	SHIFT REG	73- 10
216	74S194	SN74S194J	AMD	SHIFT REG	72-101
217	74S194	SN74S194J	TII	SHIFT REG	72-101
218	74S194	SN74S194N	AMD	SHIFT REG	72-102
219	74S194	SN74S194N	TII	SHIFT REG	72-102
220	74S194	74S194DC	FSC	SHIFT REG	72- 72

SYMBOLS AND CODES EXPLAINED IN INTERPRETER

GENERIC PRODUCT INDEX

IN ORDER OF: (1)GENERIC NO. (2)MFR TYPE NO.

LINE No.	[1] GENERIC NO.	[2] MANUFACTURER TYPE NO.	MFR. CODE	PRODUCT CLASS	PAGE & LINE
1	74S194	74S194FC	FSC	SHIFT REG	72- 73
2	74S194	74S194PC	FSC	SHIFT REG	72- 74
3	74S194	N74S194B	MULB	SHIFT REG	72- 92
4	74S194	N74S194B	PHIN	SHIFT REG	72- 92
5	74S194	N74S194B	SIC	SHIFT REG	72- 92
6	74S194	N74S194F	PHIN	SHIFT REG	72- 84
7	74S194	N74S194F	SIC	SHIFT REG	72- 84
8	74S194	N74S194F	VALG	SHIFT REG	72- 84
9	74S194	N74S194J	MULB	SHIFT REG	72- 93
10	74S194	N74S194J	PHIN	SHIFT REG	72- 93
11	74S194	N74S194J	SIC	SHIFT REG	72- 93
12	74S194	N74S194N	PHIN	SHIFT REG	72- 85
13	74S194	N74S194N	SIC	SHIFT REG	72- 85
14	74S194	N74S194N	VALG	SHIFT REG	72- 85
15	74S194	N74S194W	MULB	SHIFT REG	72- 94
16	74S194	N74S194W	PHIN	SHIFT REG	72- 94
17	74S194	N74S194W	SIC	SHIFT REG	72- 94
18	74S195	AM74S195J	AMD	SHIFT REG	73- 11
19	74S195	AM74S195N	AMD	SHIFT REG	73- 12
20	74S195	SN74S195J	AMD	SHIFT REG	72- 90
21	74S195	SN74S195J	TII	SHIFT REG	72- 90
22	74S195	SN74S195N	AMD	SHIFT REG	72- 91
23	74S195	SN74S195N	TII	SHIFT REG	72- 91
24	74S195	N74S195B	MULB	SHIFT REG	71- 57
25	74S195	N74S195B	PHIN	SHIFT REG	71- 57
26	74S195	N74S195B	SIC	SHIFT REG	71- 57
27	74S195	N74S195F	PHIN	SHIFT REG	72- 86
28	74S195	N74S195F	SIC	SHIFT REG	72- 86
29	74S195	N74S195F	VALG	SHIFT REG	72- 86
30	74S195	N74S195J	MULB	SHIFT REG	71- 58
31	74S195	N74S195J	PHIN	SHIFT REG	71- 58
32	74S195	N74S195J	SIC	SHIFT REG	71- 58
33	74S195	N74S195N	PHIN	SHIFT REG	72- 87
34	74S195	N74S195N	SIC	SHIFT REG	72- 87
35	74S195	N74S195N	VALG	SHIFT REG	72- 87
36	74S195	N74S195W	MULB	SHIFT REG	71- 59
37	74S195	N74S195W	PHIN	SHIFT REG	71- 59
38	74S195	N74S195W	SIC	SHIFT REG	71- 59
39	74S200	SN74S200AJ	TII	RAM	22-101
40	74S200	SN74S200AN	TII	RAM	22-102
41	74S200	N74S200B	MULB	RAM	23- 3
42	74S200	N74S200F	MULB	RAM	23- 4
43	74S200	N74S200F	PHIN	RAM	23- 4
44	74S200	N74S200F	SIC	RAM	23- 4
45	74S200	N74S200F	VALG	RAM	23- 4
46	74S200	N74S200I	MULB	RAM	23- 5
47	74S200	N74S200I	PHIN	RAM	23- 5
48	74S200	N74S200N	MULB	RAM	23- 6
49	74S200	N74S200N	PHIN	RAM	23- 6
50	74S200	N74S200N	SIC	RAM	23- 6
51	74S200	N74S200N	VALG	RAM	23- 6
52	74S201	SN74S201J	TII	RAM	22- 78
53	74S201	SN74S201N	TII	RAM	22- 79
54	74S201	N74S201B	MULB	RAM	23- 7
55	74S206	N74S206B	MULB	RAM	23- 18
56	74S206	N74S206B	PHIN	RAM	23- 18
57	74S206	N74S206I	MULB	RAM	23- 19
58	74S206	N74S206I	PHIN	RAM	23- 19
59	74S207	SN74S207J	TII	RAM	24- 45
60	74S207	SN74S207N	TII	RAM	24- 46
61	74S208	SN74S208J	TII	RAM	24- 47
62	74S208	SN74S208N	TII	RAM	24- 48
63	74S209	SN74S209J	TII	RAM	28- 74
64	74S209	SN74S209N	TII	RAM	28- 75
65	74S214	SN74S214AJ	TII	RAM	28- 44
66	74S214	SN74S214AN	TII	RAM	28- 45
67	74S214	SN74S214J	TII	RAM	28- 58
68	74S214	SN74S214N	TII	RAM	28- 59
69	74S273	N74S273F	PHIN	SHIFT REG	79- 35
70	74S273	N74S273F	SIC	SHIFT REG	79- 35
71	74S273	N74S273F	VALG	SHIFT REG	79- 35
72	74S273	N74S273N	PHIN	SHIFT REG	79- 36
73	74S273	N74S273N	SIC	SHIFT REG	79- 36
74	74S273	N74S273N	VALG	SHIFT REG	79- 36
75	74S281	SN74S281J	TII	SHIFT REG	72- 55
76	74S281	SN74S281N	TII	SHIFT REG	72- 56
77	74S287	DM74S287J	NSC	ROM	48- 13
78	74S287	DM74S287N	NSC	ROM	48- 14
79	74S288	DM74S288J	NSC	ROM	46- 50
80	74S288	DM74S288N	NSC	ROM	46- 51
81	74S289	SN74S289J	AMD	RAM	20- 16
82	74S289	SN74S289N	AMD	RAM	20- 17
83	74S289	74S289DC	FSC	RAM	20- 23
84	74S289	74S289FC	FSC	RAM	20- 24
85	74S289	74S289PC	FSC	RAM	20- 25
86	74S299	SN74S299J	TII	SHIFT REG	79- 33
87	74S299	SN74S299N	TII	SHIFT REG	79- 34
88	74S300	SN74S300AJ	TII	RAM	23- 1
89	74S300	SN74S300AN	TII	RAM	23- 2
90	74S301	SN74S301J	TII	RAM	22- 80
91	74S301	SN74S301N	TII	RAM	22- 81
92	74S301	N74S301B	MULB	RAM	23- 8
93	74S301	N74S301F	MULB	RAM	23- 9
94	74S301	N74S301F	PHIN	RAM	23- 9
95	74S301	N74S301F	SIC	RAM	23- 9
96	74S301	N74S301F	VALG	RAM	23- 9
97	74S301	N74S301N	PHIN	RAM	23- 10
98	74S301	N74S301N	SIC	RAM	23- 10
99	74S301	N74S301N	VALG	RAM	23- 10
100	74S309	SN74S309J	TII	RAM	28- 76
101	74S309	SN74S309N	TII	RAM	28- 77
102	74S314	SN74S314AJ	TII	RAM	28- 46
103	74S314	SN74S314AN	TII	RAM	28- 47
104	74S314	SN74S314J	TII	RAM	28- 60
105	74S314	SN74S314N	TII	RAM	28- 61
106	74S330	SN74S330J	TII	SPECIAL	87-110
107	74S330	SN74S330N	TII	SPECIAL	88- 1
108	74S331	SN74S331J	TII	SPECIAL	88- 2
109	74S331	SN74S331N	TII	SPECIAL	88- 3
110	74S373	SN74S373J	TII	SHIFT REG	79- 39
111	74S373	SN74S373N	TII	SHIFT REG	79- 40
112	74S374	SN74S374J	MMI	SHIFT REG	79- 41
113	74S374	SN74S374J	TII	SHIFT REG	79- 41
114	74S374	SN74S374N	TII	SHIFT REG	79- 42
115	74S387	DM74S387J	NSC	ROM	48- 15
116	74S387	DM74S387N	NSC	ROM	48- 16
117	74S400	SN74S400J	TII	RAM	39- 98
118	74S400	SN74S400N	TII	RAM	39- 99
119	74S401	SN74S401J	TII	RAM	39-100
120	74S401	SN74S401N	TII	RAM	39-101
121	74S452	SN74S452J	TII	ROM	58- 56
122	74S452	SN74S452N	TII	ROM	58- 57
123	74S453	SN74S453J	TII	ROM	58- 58
124	74S453	SN74S453N	TII	ROM	58- 59
125	74S454	SN74S454J	TII	ROM	56-102
126	74S454	SN74S454N	TII	ROM	56-103
127	74S455	SN74S455J	TII	ROM	56-104
128	74S455	SN74S455N	TII	ROM	58- 49
129	74S472	DM74S472J	NSC	ROM	52- 16
130	74S472	DM74S472N	NSC	ROM	52- 17
131	74S473	DM74S473J	NSC	ROM	52- 18
132	74S473	DM74S473N	NSC	ROM	52- 19
133	74S474	SN74S474N	TII	ROM	52- 51
134	74S474	DM74S474J	NSC	ROM	52- 24
135	74S474	DM74S474N	NSC	ROM	52- 25
136	74S475	DM74S475J	NSC	ROM	52- 26
137	74S475	DM74S475N	NSC	ROM	52- 27
138	74S479	SN74S479J	TII	ROM	55- 20
139	74S570	DM74S570J	NSC	ROM	50- 27
140	74S570	DM74S570N	NSC	ROM	50- 28
141	74S571	DM74S571J	NSC	ROM	50- 29
142	74S571	DM74S571N	NSC	ROM	50- 30
143	74S572	DM74S572J	NSC	ROM	53- 54
144	74S572	DM74S572N	NSC	ROM	53- 55
145	74S573	DM74S573J	NSC	ROM	53- 56
146	74S573	DM74S573N	NSC	ROM	53- 57
147	74S3708	SN74S3708J	TII	ROM	55- 21
148	74S3708	SN74S3708N	TII	ROM	55- 22
149	76S64	DM76S64J	NSC	CHAR GEN	62- 51
150	76S128	DM76S128J	NSC	CHAR GEN	62- 62
151	77S180	DM77S180J	NSC	ROM	55- 40
152	77S181	DM77S181J	NSC	ROM	55- 41
153	77S184	DM77S184J	NSC	ROM	57- 9
154	77S185	DM77S185J	NSC	ROM	57- 10
155	77S188	DM77S188J	NSC	ROM	46- 46
156	77S190	DM77S190J	NSC	ROM	58- 85
157	77S191	DM77S191J	NSC	ROM	58- 86
158	77S288	DM77S288J	NSC	ROM	46- 47
159	81	SM81	TRW	RAM	19- 3
160	82	SM82	TRW	RAM	19- 2
161	82LS10	S82LS10N	PHIN	RAM	28- 50
162	82LS10	N82LS10F	MULB	RAM	28- 38
163	82LS10	N82LS10F	PHIN	RAM	28- 38
164	82LS10	N82LS10F	VALG	RAM	28- 38
165	82LS10	N82LS10N	MULB	RAM	28- 39
166	82LS10	N82LS10N	PHIN	RAM	28- 39
167	82LS10	N82LS10N	VALG	RAM	28- 39
168	82LS11	S82LS11N	PHIN	RAM	28- 51
169	82LS11	N82LS11F	MULB	RAM	28- 40
170	82LS11	N82LS11F	PHIN	RAM	28- 40
171	82LS11	N82LS11F	VALG	RAM	28- 40
172	82LS11	N82LS11N	MULB	RAM	28- 41
173	82LS11	N82LS11N	PHIN	RAM	28- 41
174	82LS11	N82LS11N	VALG	RAM	28- 41
175	82LS116	S82LS116F	PHIN	RAM	23- 78
176	82LS116	S82LS116F	SIC	RAM	23- 78
177	82LS116	S82LS116F	VALG	RAM	23- 78
178	82LS116	N82LS116F	MULB	RAM	23- 74
179	82LS116	N82LS116F	PHIN	RAM	23- 74
180	82LS116	N82LS116F	SIC	RAM	23- 74
181	82LS116	N82LS116F	VALG	RAM	23- 74
182	82LS116	N82LS116N	MULB	RAM	23- 75
183	82LS116	N82LS116N	PHIN	RAM	23- 75
184	82LS116	N82LS116N	SIC	RAM	23- 75
185	82LS116	N82LS116N	VALG	RAM	23- 75
186	82LS117	S82LS117F	PHIN	RAM	23- 79
187	82LS117	S82LS117F	SIC	RAM	23- 79
188	82LS117	S82LS117F	VALG	RAM	23- 79
189	82LS117	N82LS117F	MULB	RAM	23- 76
190	82LS117	N82LS117F	PHIN	RAM	23- 76
191	82LS117	N82LS117F	SIC	RAM	23- 76
192	82LS117	N82LS117F	VALG	RAM	23- 76
193	82LS117	N82LS117N	MULB	RAM	23- 77
194	82LS117	N82LS117N	PHIN	RAM	23- 77
195	82LS117	N82LS117N	SIC	RAM	23- 77
196	82LS117	N82LS117N	VALG	RAM	23- 77
197	82LS181	N82LS181F	SIC	ROM	55- 75
198	82LS181	N82LS181N	SIC	ROM	55- 76
199	82S06	N82S06I	MULB	RAM	23- 36
200	82S06	N82S06I	PHIN	RAM	23- 36
201	82S07	N82S07I	MULB	RAM	23- 37
202	82S07	N82S07I	PHIN	RAM	23- 37
203	82S08	N82S08I	PHIN	RAM	29- 19
204	82S09	RC82S09I	MULB	RAM	21- 56
205	82S09	S82S09AI	PHIN	RAM	21- 64
206	82S09	S82S09I	PHIN	RAM	21- 65
207	82S09	S82S09I	SIC	RAM	21- 65
208	82S09	S82S09I	VALG	RAM	21- 65
209	82S09	S82S09N	VALG	RAM	21- 66
210	82S09	N82S09AI	PHIN	RAM	21- 58
211	82S09	N82S09AN	PHIN	RAM	21- 59
212	82S09	N82S09I	MULB	RAM	21- 62
213	82S09	N82S09I	PHIN	RAM	21- 62
214	82S09	N82S09I	SIC	RAM	21- 62
215	82S09	N82S09I	VALG	RAM	21- 62
216	82S09	N82S09N	PHIN	RAM	21- 63
217	82S09	N82S09N	SIC	RAM	21- 63
218	82S09	N82S09N	VALG	RAM	21- 63
219	82S10	RC82S10F	MULB	RAM	27-105
220	82S10	RC82S10I	MULB	RAM	27-106

SYMBOLS AND CODES EXPLAINED IN INTERPRETER

GENERIC PRODUCT INDEX

IN ORDER OF: (1)GENERIC NO. (2)MFR TYPE NO.

LINE No.	[1] GENERIC NO.	[2] MANUFACTURER TYPE NO.	MFR. CODE	PRODUCT CLASS	PAGE & LINE
1	82S10	S82S10N	VALG	RAM	28- 52
2	82S10	N82S10F	MULB	RAM	28- 42
3	82S10	N82S10F	PHIN	RAM	28- 42
4	82S10	N82S10F	VALG	RAM	28- 42
5	82S10	N82S10I	MULB	RAM	28-101
6	82S10	N82S10I	PHIN	RAM	28-101
7	82S10	N82S10N	MULB	RAM	28- 36
8	82S10	N82S10N	PHIN	RAM	28- 36
9	82S10	N82S10N	VALG	RAM	28- 36
10	82S11	RC82S11F	MULB	RAM	28- 49
11	82S11	RC82S11I	MULB	RAM	29- 16
12	82S11	S82S11N	VALG	RAM	28- 53
13	82S11	N82S11F	MULB	RAM	28- 43
14	82S11	N82S11F	PHIN	RAM	28- 43
15	82S11	N82S11F	VALG	RAM	28- 43
16	82S11	N82S11I	MULB	RAM	28-102
17	82S11	N82S11I	PHIN	RAM	28-102
18	82S11	N82S11N	MULB	RAM	28- 37
19	82S11	N82S11N	PHIN	RAM	28- 37
20	82S11	N82S11N	VALG	RAM	28- 37
21	82S12	N82S12F	MULB	RAM	18-104
22	82S12	N82S12F	PHIN	RAM	18-104
23	82S12	N82S12F	VALG	RAM	18-104
24	82S12	N82S12N	MULB	RAM	18-105
25	82S12	N82S12N	PHIN	RAM	18-105
26	82S12	N82S12N	VALG	RAM	18-105
27	82S16	RC82S16F	MULB	RAM	23- 29
28	82S16	S82S16F	PHIN	RAM	23- 32
29	82S16	S82S16F	SIC	RAM	23- 32
30	82S16	S82S16F	VALG	RAM	23- 32
31	82S16	S82S16N	VALG	RAM	23- 33
32	82S16	N82S16B	MULB	RAM	23- 11
33	82S16	N82S16F	MULB	RAM	22- 90
34	82S16	N82S16F	PHIN	RAM	22- 90
35	82S16	N82S16F	VALG	RAM	22- 90
36	82S16	N82S16N	PHIN	RAM	22- 91
37	82S16	N82S16N	VALG	RAM	22- 91
38	82S17	RC82S17F	MULB	RAM	23- 30
39	82S17	S82S17F	PHIN	RAM	23- 34
40	82S17	S82S17F	VALG	RAM	23- 34
41	82S17	S82S17N	VALG	RAM	23- 35
42	82S17	N82S17B	MULB	RAM	23- 12
43	82S17	N82S17F	MULB	RAM	22- 92
44	82S17	N82S17F	PHIN	RAM	22- 92
45	82S17	N82S17F	VALG	RAM	22- 92
46	82S17	N82S17N	VALG	RAM	23- 13
47	82S19	N82S19F	SIC	RAM	21- 60
48	82S19	N82S19I	MULB	RAM	21- 57
49	82S19	N82S19I	PHIN	RAM	21- 57
50	82S19	N82S19I	SIC	RAM	21- 57
51	82S19	N82S19I	VALG	RAM	21- 57
52	82S19	N82S19N	SIC	RAM	21- 61
53	82S21	RC82S21F	MULB	RAM	21- 9
54	82S21	S82S21F	PHIN	RAM	21- 10
55	82S21	N82S21B	MULB	RAM	21- 8
56	82S21	N82S21F	MULB	RAM	21- 11
57	82S21	N82S21F	PHIN	RAM	21- 11
58	82S21	N82S21F	SIC	RAM	21- 11
59	82S21	N82S21F	VALG	RAM	21- 11
60	82S21	N82S21N	MULB	RAM	21- 12
61	82S21	N82S21N	PHIN	RAM	21- 12
62	82S21	N82S21N	SIC	RAM	21- 12
63	82S21	N82S21N	VALG	RAM	21- 12
64	82S23	RC82S23F	MULB	ROM	46- 98
65	82S23	RC82S23N	MULB	ROM	46- 99
66	82S23	S82S23F	PHIN	ROM	46-102
67	82S23	S82S23F	SIC	ROM	46-102
68	82S23	S82S23F	VALG	ROM	46-102
69	82S23	N82S23B	MULB	ROM	46- 68
70	82S23	N82S23F	MULB	ROM	46- 69
71	82S23	N82S23F	PHIN	ROM	46- 69
72	82S23	N82S23F	SIC	ROM	46- 69
73	82S23	N82S23F	VALG	ROM	46- 69
74	82S23	N82S23N	MULB	ROM	46- 70
75	82S23	N82S23N	PHIN	ROM	46- 70
76	82S23	N82S23N	SIC	ROM	46- 70
77	82S23	N82S23N	VALG	ROM	46- 70
78	82S25	RC82S25F	MULB	RAM	20- 72
79	82S25	S82S25F	PHIN	RAM	20- 74
80	82S25	S82S25F	SIC	RAM	20- 74
81	82S25	S82S25F	VALG	RAM	20- 74
82	82S25	N82S25B	MULB	RAM	20- 53
83	82S25	N82S25F	MULB	RAM	20- 54
84	82S25	N82S25F	PHIN	RAM	20- 54
85	82S25	N82S25F	SIC	RAM	20- 54
86	82S25	N82S25F	VALG	RAM	20- 54
87	82S25	N82S25N	PHIN	RAM	20- 55
88	82S25	N82S25N	SIC	RAM	20- 55
89	82S25	N82S25N	VALG	RAM	20- 55
90	82S26	N82S26F	PHIN	ROM	47- 77
91	82S27	N82S27F	MULB	ROM	48- 51
92	82S27	N82S27F	PHIN	ROM	48- 51
93	82S27	N82S27F	VALG	ROM	48- 51
94	82S29	N82S29F	MULB	ROM	47- 78
95	82S29	N82S29F	PHIN	ROM	47- 78
96	82S70	N82S70A	MULB	SHIFT REG	72- 66
97	82S70	N82S70A	PHIN	SHIFT REG	72- 66
98	82S70	N82S70F	MULB	SHIFT REG	72- 67
99	82S70	N82S70F	PHIN	SHIFT REG	72- 67
100	82S70	N82S70F	VALG	SHIFT REG	72- 67
101	82S70	N82S70N	PHIN	SHIFT REG	72- 32
102	82S70	N82S70N	VALG	SHIFT REG	72- 32
103	82S71	N82S71B	MULB	SHIFT REG	72- 68
104	82S71	N82S71F	MULB	SHIFT REG	72- 69
105	82S71	N82S71F	PHIN	SHIFT REG	72- 69
106	82S71	N82S71F	VALG	SHIFT REG	72- 69
107	82S71	N82S71N	PHIN	SHIFT REG	72- 33
108	82S71	N82S71N	VALG	SHIFT REG	72- 33
109	82S100	RC82S100I	MULB	SPECIAL	87-102
110	82S100	RC82S100N	MULB	SPECIAL	87-103
111	82S100	S82S100I	PHIN	SPECIAL	87- 96
112	82S100	S82S100I	SIC	SPECIAL	87- 96
113	82S100	S82S100I	VALG	SPECIAL	87- 96
114	82S100	N82S100F	SIC	SPECIAL	87- 98
115	82S100	N82S100I	MULB	SPECIAL	87- 92
116	82S100	N82S100I	PHIN	SPECIAL	87- 92
117	82S100	N82S100I	SIC	SPECIAL	87- 92
118	82S100	N82S100I	VALG	SPECIAL	87- 92
119	82S100	N82S100N	MULB	SPECIAL	87- 93
120	82S100	N82S100N	PHIN	SPECIAL	87- 93
121	82S100	N82S100N	SIC	SPECIAL	87- 93
122	82S100	N82S100N	VALG	SPECIAL	87- 93
123	82S101	RC82S101I	MULB	SPECIAL	87-104
124	82S101	RC82S101N	MULB	SPECIAL	87-105
125	82S101	S82S101I	PHIN	SPECIAL	87- 97
126	82S101	S82S101I	SIC	SPECIAL	87- 97
127	82S101	S82S101I	VALG	SPECIAL	87- 97
128	82S101	N82S101F	SIC	SPECIAL	87- 99
129	82S101	N82S101I	MULB	SPECIAL	87- 94
130	82S101	N82S101I	PHIN	SPECIAL	87- 94
131	82S101	N82S101I	SIC	SPECIAL	87- 94
132	82S101	N82S101I	VALG	SPECIAL	87- 94
133	82S101	N82S101N	MULB	SPECIAL	87- 95
134	82S101	N82S101N	PHIN	SPECIAL	87- 95
135	82S101	N82S101N	SIC	SPECIAL	87- 95
136	82S101	N82S101N	VALG	SPECIAL	87- 95
137	82S102	RC82S102I	MULB	SPECIAL	87- 45
138	82S102	RC82S102N	MULB	SPECIAL	87- 46
139	82S102	S82S102I	PHIN	SPECIAL	87- 38
140	82S102	S82S102I	SIC	SPECIAL	87- 38
141	82S102	S82S102I	VALG	SPECIAL	87- 38
142	82S102	N82S102F	SIC	SPECIAL	87- 43
143	82S102	N82S102I	MULB	SPECIAL	87- 34
144	82S102	N82S102I	PHIN	SPECIAL	87- 34
145	82S102	N82S102I	SIC	SPECIAL	87- 34
146	82S102	N82S102I	VALG	SPECIAL	87- 34
147	82S102	N82S102N	MULB	SPECIAL	87- 35
148	82S102	N82S102N	PHIN	SPECIAL	87- 35
149	82S102	N82S102N	SIC	SPECIAL	87- 35
150	82S102	N82S102N	VALG	SPECIAL	87- 35
151	82S103	RC82S103I	MULB	SPECIAL	87- 47
152	82S103	RC82S103N	MULB	SPECIAL	87- 48
153	82S103	S82S103I	PHIN	SPECIAL	87- 39
154	82S103	S82S103I	SIC	SPECIAL	87- 39
155	82S103	S82S103I	VALG	SPECIAL	87- 39
156	82S103	N82S103F	SIC	SPECIAL	87- 44
157	82S103	N82S103I	MULB	SPECIAL	87- 36
158	82S103	N82S103I	PHIN	SPECIAL	87- 36
159	82S103	N82S103I	SIC	SPECIAL	87- 36
160	82S103	N82S103I	VALG	SPECIAL	87- 36
161	82S103	N82S103N	MULB	SPECIAL	87- 37
162	82S103	N82S103N	PHIN	SPECIAL	87- 37
163	82S103	N82S103N	SIC	SPECIAL	87- 37
164	82S103	N82S103N	VALG	SPECIAL	87- 37
165	82S104	S82S104I	SIC	SPECIAL	87-106
166	82S104	N82S104F	SIC	SPECIAL	88- 4
167	82S104	N82S104N	SIC	SPECIAL	87-100
168	82S105	S82S105I	SIC	SPECIAL	87-107
169	82S105	N82S105F	SIC	SPECIAL	88- 5
170	82S105	N82S105N	SIC	SPECIAL	87-101
171	82S106	RC82S106I	MULB	ROM	47- 11
172	82S106	S82S106I	PHIN	ROM	47- 13
173	82S106	S82S106I	SIC	ROM	47- 13
174	82S106	N82S106F	SIC	SPECIAL	88- 14
175	82S106	N82S106I	MULB	ROM	47- 8
176	82S106	N82S106I	PHIN	ROM	47- 8
177	82S106	N82S106I	SIC	ROM	47- 8
178	82S106	N82S106I	VALG	ROM	47- 8
179	82S106	N82S106N	MULB	ROM	47- 9
180	82S106	N82S106N	PHIN	ROM	47- 9
181	82S106	N82S106N	SIC	ROM	47- 9
182	82S107	RC82S107I	MULB	ROM	47- 12
183	82S107	S82S107I	PHIN	ROM	47- 14
184	82S107	S82S107I	SIC	ROM	47- 14
185	82S107	N82S107F	SIC	SPECIAL	88- 15
186	82S107	N82S107I	MULB	ROM	47- 10
187	82S107	N82S107I	PHIN	ROM	47- 10
188	82S107	N82S107I	SIC	ROM	47- 10
189	82S107	N82S107I	VALG	ROM	47- 10
190	82S107	N82S107N	MULB	SPECIAL	88- 13
191	82S107	N82S107N	PHIN	SPECIAL	88- 13
192	82S107	N82S107N	SIC	SPECIAL	88- 13
193	82S110	N82S110F	MULB	RAM	28- 83
194	82S110	N82S110F	PHIN	RAM	28- 83
195	82S110	N82S110F	VALG	RAM	28- 83
196	82S110	N82S110N	MULB	RAM	28- 84
197	82S110	N82S110N	PHIN	RAM	28- 84
198	82S110	N82S110N	VALG	RAM	28- 84
199	82S111	N82S111F	MULB	RAM	28- 85
200	82S111	N82S111F	PHIN	RAM	28- 85
201	82S111	N82S111F	VALG	RAM	28- 85
202	82S111	N82S111N	MULB	RAM	28- 86
203	82S111	N82S111N	PHIN	RAM	28- 86
204	82S111	N82S111N	VALG	RAM	28- 86
205	82S114	RC82S114F	MULB	ROM	49- 43
206	82S114	RC82S114I	MULB	ROM	49- 44
207	82S114	RC82S114N	MULB	ROM	49- 45
208	82S114	S82S114F	PHIN	ROM	49- 46
209	82S114	S82S114F	VALG	ROM	49- 46
210	82S114	N82S114I	MULB	ROM	49- 34
211	82S114	N82S114I	PHIN	ROM	49- 34
212	82S115	RC82S115F	MULB	ROM	52- 65
213	82S115	RC82S115I	MULB	ROM	52- 66
214	82S115	RC82S115N	MULB	ROM	52- 67
215	82S115	S82S115F	PHIN	ROM	52- 68
216	82S115	S82S115F	SIC	ROM	52- 68
217	82S115	S82S115F	VALG	ROM	52- 68
218	82S115	S82S115N	MULB	ROM	52- 69
219	82S115	N82S115F	MULB	ROM	52- 20
220	82S115	N82S115F	PHIN	ROM	52- 20

SYMBOLS AND CODES EXPLAINED IN INTERPRETER

GENERIC PRODUCT INDEX

IN ORDER OF: (1)GENERIC NO. (2)MFR TYPE NO.

LINE No.	[1] GENERIC NO.	[2] MANUFACTURER TYPE NO.	MFR. CODE	PRODUCT CLASS	PAGE & LINE
1	82S115	N82S115F	SIC	ROM	52- 20
2	82S115	N82S115F	VALG	ROM	52- 20
3	82S115	N82S115I	MULB	ROM	52- 21
4	82S115	N82S115I	PHIN	ROM	52- 21
5	82S115	N82S115N	MULB	ROM	52- 22
6	82S115	N82S115N	PHIN	ROM	52- 22
7	82S115	N82S115N	SIC	ROM	52- 22
8	82S115	N82S115N	VALG	ROM	52- 22
9	82S116	RC82S116F	MULB	RAM	22- 97
10	82S116	S82S116F	PHIN	RAM	22- 99
11	82S116	N82S116B	MULB	RAM	22- 93
12	82S116	N82S116F	MULB	RAM	22- 94
13	82S116	N82S116F	PHIN	RAM	22- 94
14	82S116	N82S116F	VALG	RAM	22- 94
15	82S116	N82S116N	PHIN	RAM	22- 95
16	82S116	N82S116N	VALG	RAM	22- 95
17	82S117	RC82S117F	MULB	RAM	22- 98
18	82S117	S82S117F	PHIN	RAM	22-100
19	82S117	N82S117B	MULB	RAM	22- 96
20	82S123	RC82S123F	MULB	ROM	46-100
21	82S123	RC82S123N	MULB	ROM	46-101
22	82S123	S82S123F	PHIN	ROM	46-103
23	82S123	S82S123F	SIC	ROM	46-103
24	82S123	S82S123F	VALG	ROM	46-103
25	82S123	N82S123B	MULB	ROM	46- 71
26	82S123	N82S123F	MULB	ROM	46- 72
27	82S123	N82S123F	PHIN	ROM	46- 72
28	82S123	N82S123F	SIC	ROM	46- 72
29	82S123	N82S123F	VALG	ROM	46- 72
30	82S123	N82S123N	MULB	ROM	46- 73
31	82S123	N82S123N	PHIN	ROM	46- 73
32	82S123	N82S123N	SIC	ROM	46- 73
33	82S123	N82S123N	VALG	ROM	46- 73
34	82S126	RC82S126F	MULB	ROM	48- 58
35	82S126	S82S126F	PHIN	ROM	48- 80
36	82S126	S82S126F	SIC	ROM	48- 80
37	82S126	S82S126F	VALG	ROM	48- 80
38	82S126	N82S126B	MULB	ROM	48- 52
39	82S126	N82S126F	MULB	ROM	48- 53
40	82S126	N82S126F	PHIN	ROM	48- 53
41	82S126	N82S126F	SIC	ROM	48- 53
42	82S126	N82S126F	VALG	ROM	48- 53
43	82S126	N82S126I	MULB	ROM	47- 79
44	82S126	N82S126I	PHIN	ROM	47- 79
45	82S126	N82S126N	PHIN	ROM	48- 54
46	82S126	N82S126N	SIC	ROM	48- 54
47	82S126	N82S126N	VALG	ROM	48- 54
48	82S129	RC82S129F	MULB	ROM	48- 59
49	82S129	S82S129F	PHIN	ROM	48- 81
50	82S129	S82S129F	SIC	ROM	48- 81
51	82S129	S82S129F	VALG	ROM	48- 81
52	82S129	N82S129B	MULB	ROM	48- 55
53	82S129	N82S129F	MULB	ROM	48- 56
54	82S129	N82S129F	PHIN	ROM	48- 56
55	82S129	N82S129F	SIC	ROM	48- 56
56	82S129	N82S129F	VALG	ROM	48- 56
57	82S129	N82S129I	MULB	ROM	47- 80
58	82S129	N82S129I	PHIN	ROM	47- 80
59	82S129	N82S129N	PHIN	ROM	48- 57
60	82S129	N82S129N	SIC	ROM	48- 57
61	82S129	N82S129N	VALG	ROM	48- 57
62	82S130	RC82S130F	MULB	ROM	50- 75
63	82S130	S82S130F	PHIN	ROM	50- 91
64	82S130	S82S130F	SIC	ROM	50- 91
65	82S130	S82S130F	VALG	ROM	50- 91
66	82S130	N82S130F	MULB	ROM	50- 72
67	82S130	N82S130F	PHIN	ROM	50- 72
68	82S130	N82S130F	SIC	ROM	50- 72
69	82S130	N82S130F	VALG	ROM	50- 72
70	82S130	N82S130N	PHIN	ROM	50- 73
71	82S130	N82S130N	SIC	ROM	50- 73
72	82S130	N82S130N	VALG	ROM	50- 73
73	82S131	RC82S131F	MULB	ROM	50- 76
74	82S131	S82S131F	PHIN	ROM	50- 92
75	82S131	S82S131F	SIC	ROM	50- 92
76	82S131	S82S131F	VALG	ROM	50- 92
77	82S131	N82S131F	MULB	ROM	50- 74
78	82S131	N82S131F	PHIN	ROM	50- 74
79	82S131	N82S131F	SIC	ROM	50- 74
80	82S131	N82S131F	VALG	ROM	50- 74
81	82S131	N82S131N	PHIN	ROM	50- 25
82	82S131	N82S131N	SIC	ROM	50- 25
83	82S131	N82S131N	VALG	ROM	50- 25
84	82S136	RC82S136F	MULB	ROM	53- 27
85	82S136	S82S136AF	PHIN	ROM	53- 30
86	82S136	S82S136F	PHIN	ROM	53- 32
87	82S136	S82S136F	VALG	ROM	53- 32
88	82S136	N82S136AF	MULB	ROM	53- 16
89	82S136	N82S136AF	PHIN	ROM	53- 16
90	82S136	N82S136AF	VALG	ROM	53- 16
91	82S136	N82S136AN	MULB	ROM	53- 17
92	82S136	N82S136AN	PHIN	ROM	53- 17
93	82S136	N82S136AN	VALG	ROM	53- 17
94	82S136	N82S136F	MULB	ROM	53- 25
95	82S136	N82S136F	PHIN	ROM	53- 25
96	82S136	N82S136F	VALG	ROM	53- 25
97	82S136	N82S136N	MULB	ROM	53- 26
98	82S136	N82S136N	PHIN	ROM	53- 26
99	82S136	N82S136N	VALG	ROM	53- 26
100	82S137	RC82S137F	MULB	ROM	53- 60
101	82S137	S82S137AF	PHIN	ROM	53- 31
102	82S137	S82S137F	PHIN	ROM	53- 33
103	82S137	S82S137F	SIC	ROM	53- 33
104	82S137	S82S137F	VALG	ROM	53- 33
105	82S137	N82S137AF	MULB	ROM	53- 18
106	82S137	N82S137AF	PHIN	ROM	53- 18
107	82S137	N82S137AF	SIC	ROM	53- 18
108	82S137	N82S137AF	VALG	ROM	53- 18
109	82S137	N82S137AN	MULB	ROM	53- 19
110	82S137	N82S137AN	PHIN	ROM	53- 19
111	82S137	N82S137AN	SIC	ROM	53- 19
112	82S137	N82S137AN	VALG	ROM	53- 19
113	82S137	N82S137F	MULB	ROM	53- 58
114	82S137	N82S137F	PHIN	ROM	53- 58
115	82S137	N82S137F	SIC	ROM	53- 58
116	82S137	N82S137F	VALG	ROM	53- 58
117	82S137	N82S137N	MULB	ROM	53- 59
118	82S137	N82S137N	PHIN	ROM	53- 59
119	82S137	N82S137N	SIC	ROM	53- 59
120	82S137	N82S137N	VALG	ROM	53- 59
121	82S140	RC82S140F	MULB	ROM	52- 78
122	82S140	RC82S140N	MULB	ROM	52- 79
123	82S140	S82S140F	PHIN	ROM	52- 82
124	82S140	S82S140F	VALG	ROM	52- 82
125	82S140	S82S140N	MULB	ROM	52- 83
126	82S140	S82S140N	VALG	ROM	52- 83
127	82S140	N82S140F	MULB	ROM	52- 70
128	82S140	N82S140F	PHIN	ROM	52- 70
129	82S140	N82S140F	VALG	ROM	52- 70
130	82S140	N82S140N	MULB	ROM	52- 71
131	82S140	N82S140N	PHIN	ROM	52- 71
132	82S140	N82S140N	VALG	ROM	52- 71
133	82S141	RC82S141F	MULB	ROM	52- 80
134	82S141	RC82S141N	MULB	ROM	52- 81
135	82S141	S82S141F	PHIN	ROM	52- 84
136	82S141	S82S141F	SIC	ROM	52- 84
137	82S141	S82S141F	VALG	ROM	52- 84
138	82S141	N82S141F	MULB	ROM	52- 72
139	82S141	N82S141F	PHIN	ROM	52- 72
140	82S141	N82S141F	SIC	ROM	52- 72
141	82S141	N82S141F	VALG	ROM	52- 72
142	82S141	N82S141N	MULB	ROM	52- 73
143	82S141	N82S141N	PHIN	ROM	52- 73
144	82S141	N82S141N	SIC	ROM	52- 73
145	82S141	N82S141N	VALG	ROM	52- 73
146	82S146	N82S146F	MULB	ROM	51-103
147	82S146	N82S146F	PHIN	ROM	51-103
148	82S146	N82S146F	VALG	ROM	51-103
149	82S147	N82S147F	MULB	ROM	51-104
150	82S147	N82S147F	PHIN	ROM	51-104
151	82S147	N82S147F	SIC	ROM	51-104
152	82S147	N82S147F	VALG	ROM	51-104
153	82S180	RC82S180F	MULB	ROM	55- 93
154	82S180	RC82S180N	MULB	ROM	55- 94
155	82S180	N82S180F	MULB	ROM	55- 85
156	82S180	N82S180F	PHIN	ROM	55- 85
157	82S180	N82S180F	SIC	ROM	55- 85
158	82S180	N82S180F	VALG	ROM	55- 85
159	82S180	N82S180N	MULB	ROM	55- 86
160	82S180	N82S180N	PHIN	ROM	55- 86
161	82S180	N82S180N	SIC	ROM	55- 86
162	82S180	N82S180N	VALG	ROM	55- 86
163	82S181	RC82S181F	MULB	ROM	55- 95
164	82S181	RC82S181N	MULB	ROM	55- 96
165	82S181	S82S181F	PHIN	ROM	55- 99
166	82S181	S82S181F	SIC	ROM	55- 99
167	82S181	S82S181F	VALG	ROM	55- 99
168	82S181	N82S181F	MULB	ROM	55- 87
169	82S181	N82S181F	PHIN	ROM	55- 87
170	82S181	N82S181F	SIC	ROM	55- 87
171	82S181	N82S181F	VALG	ROM	55- 87
172	82S181	N82S181N	MULB	ROM	55- 88
173	82S181	N82S181N	PHIN	ROM	55- 88
174	82S181	N82S181N	SIC	ROM	55- 88
175	82S181	N82S181N	VALG	ROM	55- 88
176	82S182	S82S182F	PHIN	ROM	55-100
177	82S182	N82S182F	PHIN	ROM	55- 81
178	82S182	N82S182N	PHIN	ROM	55- 82
179	82S183	S82S183F	PHIN	ROM	55-101
180	82S183	N82S183F	SIC	ROM	60- 65
181	82S183	N82S183N	SIC	ROM	60- 66
182	82S184	RC82S184F	MULB	ROM	57- 22
183	82S184	N82S184F	MULB	ROM	56- 92
184	82S184	N82S184F	PHIN	ROM	56- 92
185	82S184	N82S184I	PHIN	ROM	57- 16
186	82S184	N82S184I	VALG	ROM	57- 16
187	82S185	RC82S185F	MULB	ROM	57- 23
188	82S185	S82S185I	PHIN	ROM	57- 21
189	82S185	S82S185I	SIC	ROM	57- 21
190	82S185	S82S185I	VALG	ROM	57- 21
191	82S185	N82S185F	MULB	ROM	56- 93
192	82S185	N82S185F	PHIN	ROM	56- 93
193	82S185	N82S185F#	SIC	ROM	56- 90
194	82S185	N82S185N#	SIC	ROM	56- 91
195	82S190	RC82S190I	MULB	ROM	58- 96
196	82S190	RC82S190N	MULB	ROM	58- 97
197	82S190	N82S190I	MULB	ROM	58- 93
198	82S190	N82S190I	PHIN	ROM	58- 93
199	82S190	N82S190I	VALG	ROM	58- 93
200	82S190	N82S190N	MULB	ROM	58- 94
201	82S190	N82S190N	PHIN	ROM	58- 94
202	82S191	RC82S191I	MULB	ROM	58- 98
203	82S191	RC82S191N	MULB	ROM	57- 85
204	82S191	S82S191I	PHIN	ROM	58- 99
205	82S191	S82S191I	SIC	ROM	58- 99
206	82S191	S82S191I	VALG	ROM	58- 99
207	82S191	N82S191I	MULB	ROM	58- 95
208	82S191	N82S191I	PHIN	ROM	58- 95
209	82S191	N82S191I	SIC	ROM	58- 95
210	82S191	N82S191I	VALG	ROM	58- 95
211	82S191	N82S191N	MULB	ROM	57- 77
212	82S191	N82S191N	PHIN	ROM	57- 77
213	82S191	N82S191N	SIC	ROM	57- 77
214	82S200	RC82S200I	MULB	ROM	47- 4
215	82S200	RC82S200N	MULB	ROM	47- 5
216	82S200	N82S200I	MULB	ROM	46-110
217	82S200	N82S200I	PHIN	ROM	46-110
218	82S200	N82S200I	VALG	ROM	46-110
219	82S200	N82S200N	MULB	ROM	47- 1
220	82S200	N82S200N	PHIN	ROM	47- 1

SYMBOLS AND CODES EXPLAINED IN INTERPRETER

GENERIC PRODUCT INDEX

IN ORDER OF: (1)GENERIC NO. (2)MFR TYPE NO.

LINE No.	1 GENERIC NO.	2 MANUFACTURER TYPE NO.	MFR. CODE	PRODUCT CLASS	PAGE & LINE
1	82S200	N82S200N	VALG	ROM	47- 1
2	82S201	RC82S201I	MULB	ROM	47- 6
3	82S201	RC82S201N	MULB	ROM	47- 7
4	82S201	N82S201I	MULB	ROM	47- 2
5	82S201	N82S201I	PHIN	ROM	47- 2
6	82S201	N82S201I	VALG	ROM	47- 2
7	82S201	N82S201N	MULB	ROM	47- 3
8	82S201	N82S201N	PHIN	ROM	47- 3
9	82S201	N82S201N	VALG	ROM	47- 3
10	82S210	N82S210F	MULB	RAM	27- 83
11	82S210	N82S210F	PHIN	RAM	27- 83
12	82S210	N82S210F	SIC	RAM	27- 83
13	82S210	N82S210N	MULB	RAM	27- 84
14	82S210	N82S210N	PHIN	RAM	27- 84
15	82S210	N82S210N	SIC	RAM	27- 84
16	82S212	N82S212F	PHIN	RAM	27- 82
17	82S212	N82S212F	SIC	RAM	27- 82
18	82S214	RC82S214I	MULB	ROM	49- 14
19	82S214	S82S214F	VALG	ROM	49- 15
20	82S214	S82S214I	PHIN	ROM	49- 16
21	82S214	N82S214F	VALG	ROM	49- 11
22	82S214	N82S214I	MULB	ROM	49- 12
23	82S214	N82S214I	PHIN	ROM	49- 12
24	82S214	N82S214N	VALG	ROM	49- 13
25	82S215	RC82S215I	MULB	ROM	51- 60
26	82S215	S82S215F	VALG	ROM	51- 61
27	82S215	S82S215I	PHIN	ROM	51- 62
28	82S215	N82S215F	VALG	ROM	51- 49
29	82S215	N82S215I	MULB	ROM	51- 50
30	82S215	N82S215I	PHIN	ROM	51- 50
31	82S215	N82S215N	VALG	ROM	51- 51
32	82S226	RC82S226F	MULB	ROM	47- 85
33	82S226	S82S226F	PHIN	ROM	47- 87
34	82S226	S82S226F	VALG	ROM	47- 87
35	82S226	N82S226B	MULB	ROM	47- 81
36	82S226	N82S226F	MULB	ROM	47- 82
37	82S226	N82S226F	PHIN	ROM	47- 82
38	82S226	N82S226F	VALG	ROM	47- 82
39	82S226	N82S226N	VALG	ROM	47- 70
40	82S229	RC82S229F	MULB	ROM	47- 86
41	82S229	S82S229F	PHIN	ROM	47- 88
42	82S229	S82S229F	VALG	ROM	47- 88
43	82S229	N82S229B	MULB	ROM	47- 83
44	82S229	N82S229F	MULB	ROM	47- 84
45	82S229	N82S229F	PHIN	ROM	47- 84
46	82S229	N82S229F	VALG	ROM	47- 84
47	82S229	N82S229N	VALG	ROM	47- 71
48	82S230	RC82S230F	MULB	ROM	50- 3
49	82S230	S82S230F	PHIN	ROM	50- 4
50	82S230	S82S230F	VALG	ROM	50- 4
51	82S230	N82S230F	MULB	ROM	50- 1
52	82S230	N82S230F	PHIN	ROM	50- 1
53	82S230	N82S230F	VALG	ROM	50- 1
54	82S230	N82S230N	VALG	ROM	49- 95
55	82S231	RC82S231F	MULB	ROM	49- 87
56	82S231	S82S231F	PHIN	ROM	50- 5
57	82S231	S82S231F	VALG	ROM	50- 5
58	82S231	N82S231F	MULB	ROM	50- 2
59	82S231	N82S231F	PHIN	ROM	50- 2
60	82S231	N82S231F	VALG	ROM	50- 2
61	82S231	N82S231N	VALG	ROM	49- 96
62	82S240	RC82S240F	MULB	ROM	49- 88
63	82S240	RC82S240N	MULB	ROM	51- 10
64	82S240	S82S240F	PHIN	ROM	51- 68
65	82S240	S82S240F	VALG	ROM	51- 68
66	82S240	N82S240F	MULB	ROM	51- 63
67	82S240	N82S240F	PHIN	ROM	51- 63
68	82S240	N82S240F	VALG	ROM	51- 63
69	82S240	N82S240N	MULB	ROM	51- 64
70	82S240	N82S240N	PHIN	ROM	51- 64
71	82S240	N82S240N	VALG	ROM	51- 64
72	82S241	RC82S241F	MULB	ROM	51- 11
73	82S241	RC82S241N	MULB	ROM	51- 12
74	82S241	S82S241F	PHIN	ROM	51- 69
75	82S241	S82S241F	VALG	ROM	51- 69
76	82S241	N82S241F	MULB	ROM	51- 65
77	82S241	N82S241F	PHIN	ROM	51- 65
78	82S241	N82S241F	VALG	ROM	51- 65
79	82S241	N82S241N	MULB	ROM	51- 66
80	82S241	N82S241N	PHIN	ROM	51- 66
81	82S241	N82S241N	VALG	ROM	51- 66
82	82S280	RC82S280I	MULB	ROM	53-102
83	82S280	S82S280F	VALG	ROM	54- 51
84	82S280	S82S280I	PHIN	ROM	54- 52
85	82S280	N82S280F	VALG	ROM	54- 43
86	82S280	N82S280I	MULB	ROM	54- 44
87	82S280	N82S280I	PHIN	ROM	54- 44
88	82S280	N82S280N	VALG	ROM	54- 45
89	82S281	RC82S281I	MULB	ROM	53-103
90	82S281	S82S281F	VALG	ROM	54- 53
91	82S281	S82S281I	PHIN	ROM	54- 54
92	82S281	N82S281F	VALG	ROM	54- 46
93	82S281	N82S281I	MULB	ROM	54- 47
94	82S281	N82S281I	PHIN	ROM	54- 47
95	82S281	N82S281N	VALG	ROM	54- 48
96	82S290	RC82S290F	MULB	ROM	57- 30
97	82S290	RC82S290N	MULB	ROM	57- 28
98	82S290	S82S290F	PHIN	ROM	57- 86
99	82S290	S82S290F	VALG	ROM	57- 86
100	82S290	S82S290N	MULB	ROM	57- 82
101	82S290	N82S290F	MULB	ROM	57- 78
102	82S290	N82S290F	PHIN	ROM	57- 78
103	82S290	N82S290F	VALG	ROM	57- 78
104	82S290	N82S290N	MULB	ROM	57- 79
105	82S290	N82S290N	PHIN	ROM	57- 79
106	82S290	N82S290N	VALG	ROM	57- 79
107	82S291	RC82S291F	MULB	ROM	57- 31
108	82S291	RC82S291N	MULB	ROM	57- 29
109	82S291	S82S291F	PHIN	ROM	57- 87
110	82S291	S82S291F	VALG	ROM	57- 87
111	82S291	N82S291F	MULB	ROM	57- 80
112	82S291	N82S291F	PHIN	ROM	57- 80
113	82S291	N82S291F	VALG	ROM	57- 80
114	82S291	N82S291N	MULB	ROM	57- 81
115	82S291	N82S291N	PHIN	ROM	57- 81
116	82S291	N82S291N	VALG	ROM	57- 81
117	82S400	N82S400AI	MULB	RAM	39-102
118	82S400	N82S400AI	PHIN	RAM	39-102
119	82S400	N82S400AI	VALG	RAM	39-102
120	82S400	N82S400I	MULB	RAM	39-103
121	82S400	N82S400I	PHIN	RAM	39-103
122	82S400	N82S400I	SIC	RAM	39-103
123	82S400	N82S400I	VALG	RAM	39-103
124	82S401	N82S401AI	MULB	RAM	39-104
125	82S401	N82S401AI	PHIN	RAM	39-104
126	82S401	N82S401AI	VALG	RAM	39-104
127	82S401	N82S401I	MULB	RAM	39-105
128	82S401	N82S401I	PHIN	RAM	39-105
129	82S401	N82S401I	SIC	RAM	39-105
130	82S401	N82S401I	VALG	RAM	39-105
131	82S2708	RC82S2708F	MULB	ROM	55- 97
132	82S2708	RC82S2708N	MULB	ROM	55- 98
133	82S2708	S82S2708F	PHIN	ROM	55-102
134	82S2708	S82S2708F	SIC	ROM	55-102
135	82S2708	S82S2708F	VALG	ROM	55-102
136	82S2708	N82S2708F	MULB	ROM	55- 89
137	82S2708	N82S2708F	PHIN	ROM	55- 89
138	82S2708	N82S2708F	VALG	ROM	55- 89
139	82S2708	N82S2708N	MULB	ROM	55- 90
140	82S2708	N82S2708N	PHIN	ROM	55- 90
141	82S2708	N82S2708N	VALG	ROM	55- 90
142	83	SM83	TRW	RAM	19- 4
143	85S68	DM85S68D	NSC	RAM	20- 45
144	85S68	DM85S68N	NSC	RAM	20- 46
145	86S64	DM86S64J	NSC	CHAR GEN	62- 52
146	86S64	DM86S64N	NSC	CHAR GEN	62- 53
147	86S128	DM86S128J	NSC	CHAR GEN	62- 63
148	86S128	DM86S128N	NSC	CHAR GEN	62- 64
149	87S180	DM87S180J	NSC	ROM	55- 42
150	87S180	DM87S180N	NSC	ROM	55- 43
151	87S181	DM87S181J	NSC	ROM	55- 44
152	87S181	DM87S181N	NSC	ROM	55- 45
153	87S184	DM87S184J	NSC	ROM	57- 1
154	87S184	DM87S184N	NSC	ROM	57- 2
155	87S185	DM87S185J	NSC	ROM	57- 3
156	87S185	DM87S185N	NSC	ROM	57- 4
157	87S188	DM87S188J	NSC	ROM	46- 42
158	87S188	DM87S188N	NSC	ROM	46- 43
159	87S190	DM87S190J	NSC	ROM	58- 73
160	87S190	DM87S190N	NSC	ROM	58- 74
161	87S191	DM87S191J	NSC	ROM	58- 75
162	87S191	DM87S191N	NSC	ROM	58- 76
163	87S288	DM87S288J	NSC	ROM	46- 44
164	87S288	DM87S288N	NSC	ROM	46- 45
165	90L44	AM90L44BDC	AMD	RAM	42- 85
166	90L44	AM90L44BDM	AMD	RAM	42- 86
167	90L44	AM90L44BPC	AMD	RAM	42- 87
168	90L44	AM90L44CDC	AMD	RAM	42- 56
169	90L44	AM90L44CDM	AMD	RAM	42- 57
170	90L44	AM90L44CPC	AMD	RAM	42- 58
171	90L44	AM90L44DDC	AMD	RAM	42- 37
172	90L44	AM90L44DPC	AMD	RAM	42- 38
173	90L60	AM90L60CDC	AMD	RAM	39- 35
174	90L60	AM90L60CPC	AMD	RAM	39- 36
175	90L60	AM90L60DDC	AMD	RAM	39- 7
176	90L60	AM90L60DPC	AMD	RAM	39- 8
177	90L60	AM90L60EDC	AMD	RAM	38- 85
178	90L60	AM90L60EPC	AMD	RAM	38- 86
179	91L01	AM91L01ADC	AMD	RAM	27- 45
180	91L01	AM91L01ADM	AMD	RAM	27- 46
181	91L01	AM91L01AFM	AMD	RAM	27- 47
182	91L01	AM91L01APC	AMD	RAM	27- 48
183	91L01	AM91L01BDC	AMD	RAM	27- 14
184	91L01	AM91L01BDM	AMD	RAM	27- 15
185	91L01	AM91L01BFM	AMD	RAM	27- 16
186	91L01	AM91L01BPC	AMD	RAM	27- 17
187	91L01	AM91L01CDC	AMD	RAM	26-106
188	91L01	AM91L01CDM	AMD	RAM	26-107
189	91L01	AM91L01CPC	AMD	RAM	26-108
190	91L02	AM91L02ADC	AMD	RAM	32- 29
191	91L02	AM91L02ADM	AMD	RAM	32- 30
192	91L02	AM91L02AFM	AMD	RAM	32- 31
193	91L02	AM91L02APC	AMD	RAM	32- 32
194	91L02	AM91L02BDC	AMD	RAM	31- 91
195	91L02	AM91L02BDM	AMD	RAM	31- 92
196	91L02	AM91L02BFM	AMD	RAM	31- 93
197	91L02	AM91L02BPC	AMD	RAM	31- 94
198	91L02	AM91L02CDC	AMD	RAM	31- 45
199	91L02	AM91L02CDM	AMD	RAM	31- 46
200	91L02	AM91L02CPC	AMD	RAM	31- 47
201	91L02	AM91L02DC	AMD	RAM	32- 59
202	91L02	AM91L02DM	AMD	RAM	32- 60
203	91L02	AM91L02FM	AMD	RAM	32- 61
204	91L02	AM91L02PC	AMD	RAM	32- 62
205	91L11	AM91L11ADC	AMD	RAM	27- 49
206	91L11	AM91L11ADM	AMD	RAM	27- 50
207	91L11	AM91L11AFM	AMD	RAM	27- 51
208	91L11	AM91L11APC	AMD	RAM	27- 52
209	91L11	AM91L11BDC	AMD	RAM	27- 18
210	91L11	AM91L11BDM	AMD	RAM	27- 19
211	91L11	AM91L11BFM	AMD	RAM	27- 20
212	91L11	AM91L11BPC	AMD	RAM	27- 21
213	91L11	AM91L11CDC	AMD	RAM	26-109
214	91L11	AM91L11CDM	AMD	RAM	26-110
215	91L11	AM91L11CPC	AMD	RAM	27- 1
216	91L12	AM91L12ADC	AMD	RAM	27- 53
217	91L12	AM91L12ADM	AMD	RAM	27- 54
218	91L12	AM91L12AFM	AMD	RAM	27- 55
219	91L12	AM91L12APC	AMD	RAM	27- 56
220	91L12	AM91L12BDC	AMD	RAM	27- 22

SYMBOLS AND CODES EXPLAINED IN INTERPRETER

GENERIC PRODUCT INDEX

IN ORDER OF: (1)GENERIC NO. (2)MFR TYPE NO.

LINE No.	[1] GENERIC NO.	[2] MANUFACTURER TYPE NO.	MFR. CODE	PRODUCT CLASS	PAGE & LINE
1	91L12	AM91L12BDM	AMD	RAM	27- 23
2	91L12	AM91L12BFM	AMD	RAM	27- 24
3	91L12	AM91L12BPC	AMD	RAM	27- 25
4	91L12	AM91L12CDC	AMD	RAM	27- 2
5	91L12	AM91L12CDM	AMD	RAM	27- 3
6	91L12	AM91L12CPC	AMD	RAM	27- 4
7	91L14	AM91L14BDC	AMD	RAM	36- 74
8	91L14	AM91L14BDM	AMD	RAM	36- 75
9	91L14	AM91L14BPC	AMD	RAM	36- 76
10	91L14	AM91L14CDC	AMD	RAM	36- 54
11	91L14	AM91L14CDM	AMD	RAM	36- 55
12	91L14	AM91L14CPC	AMD	RAM	36- 56
13	91L24	AM91L24BDC	AMD	RAM	36- 82
14	91L24	AM91L24BDM	AMD	RAM	36- 83
15	91L24	AM91L24BPC	AMD	RAM	36- 84
16	91L24	AM91L24CDC	AMD	RAM	36- 57
17	91L24	AM91L24CDM	AMD	RAM	36- 58
18	91L24	AM91L24CPC	AMD	RAM	36- 59
19	91L30	AM91L30ADC	AMD	RAM	37- 33
20	91L30	AM91L30ADM	AMD	RAM	37- 34
21	91L30	AM91L30APC	AMD	RAM	37- 35
22	91L30	AM91L30BDC	AMD	RAM	37- 23
23	91L30	AM91L30BDM	AMD	RAM	37- 24
24	91L30	AM91L30BPC	AMD	RAM	37- 25
25	91L30	AM91L30CDC	AMD	RAM	37- 13
26	91L30	AM91L30CDM	AMD	RAM	37- 14
27	91L30	AM91L30CPC	AMD	RAM	37- 15
28	91L30	AM91L30DDC	AMD	RAM	37- 7
29	91L30	AM91L30DPC	AMD	RAM	37- 8
30	91L31	AM91L31ADC	AMD	RAM	37- 36
31	91L31	AM91L31ADM	AMD	RAM	37- 37
32	91L31	AM91L31BDC	AMD	RAM	37- 26
33	91L31	AM91L31BDM	AMD	RAM	37- 27
34	91L31	AM91L31CDC	AMD	RAM	37- 16
35	91L31	AM91L31CDM	AMD	RAM	37- 17
36	91L31	AM91L31DDC	AMD	RAM	37- 9
37	91L40	AM91L40ADC	AMD	RAM	42- 97
38	91L40	AM91L40ADM	AMD	RAM	42- 98
39	91L40	AM91L40APC	AMD	RAM	42- 99
40	91L40	AM91L40BDC	AMD	RAM	42- 79
41	91L40	AM91L40BDM	AMD	RAM	42- 80
42	91L40	AM91L40BPC	AMD	RAM	42- 81
43	91L40	AM91L40CDC	AMD	RAM	42- 59
44	91L40	AM91L40CDM	AMD	RAM	42- 60
45	91L40	AM91L40CPC	AMD	RAM	42- 61
46	91L40	AM91L40DDC	AMD	RAM	42- 39
47	91L40	AM91L40DPC	AMD	RAM	42- 40
48	91L41	AM91L41DDC	AMD	RAM	40- 49
49	92L44	AM92L44BDC	AMD	RAM	42- 88
50	92L44	AM92L44BDM	AMD	RAM	42- 89
51	92L44	AM92L44BPC	AMD	RAM	42- 90
52	92L44	AM92L44CDC	AMD	RAM	42- 62
53	92L44	AM92L44CDM	AMD	RAM	42- 63
54	92L44	AM92L44CPC	AMD	RAM	42- 64
55	92L44	AM92L44DDC	AMD	RAM	42- 41
56	92L44	AM92L44DPC	AMD	RAM	42- 65
57	93H00	93H00DC	FSC	SHIFT REG	72- 41
58	93H00	93H00DM	FSC	SHIFT REG	72- 42
59	93H00	93H00FC	FSC	SHIFT REG	72- 43
60	93H00	93H00FM	FSC	SHIFT REG	72- 44
61	93H00	93H00PC	FSC	SHIFT REG	72- 45
62	93H72	93H72DC	FSC	SHIFT REG	72- 46
63	93H72	93H72DM	FSC	SHIFT REG	72- 47
64	93H72	93H72FC	FSC	SHIFT REG	72- 48
65	93H72	93H72FM	FSC	SHIFT REG	72- 49
66	93H72	93H72PC	FSC	SHIFT REG	72- 50
67	93L00	AM93L00DC	AMD	SHIFT REG	66- 74
68	93L00	AM93L00DM	AMD	SHIFT REG	66- 75
69	93L00	AM93L00FM	AMD	SHIFT REG	66- 76
70	93L00	AM93L00PC	AMD	SHIFT REG	66- 77
71	93L00	93L00DC	FSC	SHIFT REG	66- 69
72	93L00	93L00DM	FSC	SHIFT REG	66- 70
73	93L00	93L00FC	FSC	SHIFT REG	66- 71
74	93L00	93L00FM	FSC	SHIFT REG	66- 72
75	93L00	93L00PC	FSC	SHIFT REG	66- 73
76	93L28	AM93L28DC	AMD	SHIFT REG	82- 93
77	93L28	AM93L28DM	AMD	SHIFT REG	82- 94
78	93L28	AM93L28FM	AMD	SHIFT REG	82- 95
79	93L28	AM93L28PC	AMD	SHIFT REG	82- 96
80	93L28	93L28DC	FSC	SHIFT REG	82- 74
81	93L28	93L28DM	FSC	SHIFT REG	82- 75
82	93L28	93L28FC	FSC	SHIFT REG	82- 76
83	93L28	93L28FM	FSC	SHIFT REG	82- 77
84	93L28	93L28PC	FSC	SHIFT REG	82- 78
85	93L38	AM93L38DC	AMD	SHIFT REG	77- 10
86	93L38	AM93L38DM	AMD	SHIFT REG	77- 11
87	93L38	AM93L38FM	AMD	SHIFT REG	77- 12
88	93L38	AM93L38PC	AMD	SHIFT REG	77- 13
89	93L38	93L38DC	FSC	SHIFT REG	76-102
90	93L38	93L38DM	FSC	SHIFT REG	77- 1
91	93L38	93L38FC	FSC	SHIFT REG	77- 2
92	93L38	93L38FM	FSC	SHIFT REG	77- 3
93	93L38	93L38PC	FSC	SHIFT REG	77- 4
94	93L412	93L412DC	FSC	RAM	24- 59
95	93L412	93L412DM	FSC	RAM	24- 67
96	93L412	93L412FC	FSC	RAM	24- 60
97	93L412	93L412FM	FSC	RAM	24- 68
98	93L415	93L415DC	FSC	RAM	28-106
99	93L415	93L415DM	FSC	RAM	29- 8
100	93L415	93L415FC	FSC	RAM	28-107
101	93L415	93L415FM	FSC	RAM	29- 9
102	93L415	93L415PC	FSC	RAM	28-108
103	93L415	S93L415F	PHIN	RAM	28- 54
104	93L415	S93L415N	PHIN	RAM	28- 55
105	93L415	N93L415F	MULB	RAM	28-103
106	93L415	N93L415F	PHIN	RAM	28-103
107	93L415	N93L415F	SIC	RAM	28-103
108	93L415	N93L415F	VALG	RAM	28-103
109	93L415	N93L415N	MULB	RAM	28-104
110	93L415	N93L415N	PHIN	RAM	28-104
111	93L415	N93L415N	SIC	RAM	28-104
112	93L415	N93L415N	VALG	RAM	28-104
113	93L420	93L420DC	FSC	RAM	23- 39
114	93L420	93L420DM	FSC	RAM	23- 50
115	93L420	93L420FM	FSC	RAM	23- 51
116	93L421	93L421DC	FSC	RAM	23- 70
117	93L421	93L421DM	FSC	RAM	23- 72
118	93L421	93L421FM	FSC	RAM	23- 73
119	93L421	93L421PC	FSC	RAM	23- 71
120	93L422	93L422DC	FSC	RAM	24- 61
121	93L422	93L422DM	FSC	RAM	24- 69
122	93L422	93L422FC	FSC	RAM	24- 62
123	93L422	93L422FM	FSC	RAM	24- 70
124	93L425	93L425DC	FSC	RAM	28-109
125	93L425	93L425DM	FSC	RAM	29- 10
126	93L425	93L425FC	FSC	RAM	28-110
127	93L425	93L425FM	FSC	RAM	29- 11
128	93L425	93L425PC	FSC	RAM	29- 1
129	93L425	S93L425F	PHIN	RAM	28- 56
130	93L425	S93L425N	PHIN	RAM	28- 57
131	93L425	N93L425N	PHIN	RAM	28- 48
132	93S00	93S00DC	FSC	SHIFT REG	72- 75
133	93S00	93S00DM	FSC	SHIFT REG	72- 76
134	93S00	93S00FC	FSC	SHIFT REG	72- 77
135	93S00	93S00FM	FSC	SHIFT REG	72- 78
136	93S00	93S00PC	FSC	SHIFT REG	72- 79
137	95H00	95H00DC	FSC	SHIFT REG	73- 18
138	100	I100	ICC	SHIFT REG	75- 71
139	100	T100	ICC	SHIFT REG	67- 58
140	101	T101	ICC	SHIFT REG	67- 59
141	101	TM101	TUNH	RAM	19- 32
142	101	FLQ101-7489	SIEG	RAM	20- 94
143	101	GYQ101	PHIN	RAM	28- 5
144	101	GYQ101	SIC	RAM	28- 5
145	102	I102	ICC	SHIFT REG	74- 37
146	102	T102	ICC	SHIFT REG	74- 36
147	103	I103	ICC	SHIFT REG	74- 38
148	104	T104	ICC	SHIFT REG	83- 6
149	105	FLQ105-8489	SIEG	RAM	20- 95
150	106	I106	ICC	SHIFT REG	76- 96
151	106	TM106	TUNH	RAM	23- 47
152	107	I107	ICC	SHIFT REG	76- 97
153	107	TM107	TUNH	RAM	23- 55
154	109	MS109	ECV	ROM	46- 2
155	111	FLQ111-7481A	SIEG	RAM	18-108
156	112	I112	ICC	SHIFT REG	65- 28
157	113	I113	ICC	SHIFT REG	83- 57
158	113	MS113	ECV	ROM	46- 3
159	113	T113	ICC	SHIFT REG	83- 92
160	114	T114	ICC	SHIFT REG	76- 35
161	115	MS115	ECV	ROM	46- 8
162	115	FLQ115-8481A	SIEG	RAM	18-109
163	116	MS116	ECV	ROM	46- 4
164	116	FDR116Z1	PHIN	CHAR GEN	62- 6
165	116	FDR116Z1	SIC	CHAR GEN	62- 6
166	116	FDR116Z2	PHIN	CHAR GEN	62- 7
167	116	FDR116Z2	SIC	CHAR GEN	62- 7
168	116	FDR116Z	MULB	ROM	51- 5
169	116	FDR116Z	PHIN	ROM	51- 5
170	116	FDR116Z	SIC	ROM	51- 5
171	120	M120-2D1	SGAI	RAM	26- 50
172	120	M120-2F1	SGAI	RAM	26- 51
173	120	M120D1	SGAI	RAM	26- 67
174	120	M120F1	SGAI	RAM	26- 68
175	121	FLQ121-7484A	SIEG	RAM	18-110
176	125	FLQ125-8484A	SIEG	RAM	19- 1
177	126	FDR126Z1#1	PHIN	CODE CONV	64- 26
178	126	FDR126Z1#1	SIC	CODE CONV	64- 26
179	126	FDR126Z1#2	PHIN	CODE CONV	64- 67
180	126	FDR126Z1#2	SIC	CODE CONV	64- 67
181	126	FDR126Z	PHIN	ROM	49- 66
182	126	FDR126Z	SIC	ROM	49- 66
183	131	FDR131Z1#1	PHIN	CODE CONV	64- 14
184	131	FDR131Z1#1	SIC	CODE CONV	64- 14
185	131	FDR131Z1#2	PHIN	CODE CONV	64- 59
186	131	FDR131Z1#2	SIC	CODE CONV	64- 59
187	131	FDR131Z2	PHIN	CHAR GEN	62- 5
188	131	FDR131Z2	SIC	CHAR GEN	62- 5
189	131	FDR131Z#1	PHIN	ROM	51- 14
190	131	FDR131Z#1	SIC	ROM	51- 14
191	131	FDR131Z#2	PHIN	ROM	53- 10
192	131	FDR131Z#2	SIC	ROM	53- 10
193	131	FLQ131-74170	SIEG	RAM	18- 65
194	135	FLQ135-84170	SIEG	RAM	18- 66
195	142	M142A-B1	SGAI	SHIFT REG	84-101
196	142	M142A-D1	SGAI	SHIFT REG	84-102
197	142	M142B1	SGAI	SHIFT REG	84-105
198	142	M142D1	SGAI	SHIFT REG	84-106
199	146	FDR146BZ1	PHIN	CHAR GEN	62- 34
200	146	FDR146BZ1	SIC	CHAR GEN	62- 34
201	146	FDR146BZ2	PHIN	CHAR GEN	62- 57
202	146	FDR146BZ2	SIC	CHAR GEN	62- 57
203	146	FDR146BZ	PHIN	ROM	52-106
204	146	FDR146BZ	SIC	ROM	52-106
205	146	FDR146Z1	PHIN	CHAR GEN	62- 35
206	146	FDR146Z1	SIC	CHAR GEN	62- 35
207	146	FDR146Z2	PHIN	CHAR GEN	62- 58
208	146	FDR146Z2	SIC	CHAR GEN	62- 58
209	146	FDR146Z	PHIN	ROM	52-107
210	146	FDR146Z	SIC	ROM	52-107
211	150	T150B1	SGAI	SHIFT REG	68- 61
212	150	T150D1	SGAI	SHIFT REG	68- 62
213	150	T150D2	SGAI	SHIFT REG	68- 63
214	151	FDR151BZ	PHIN	ROM	58- 39
215	151	FDR151BZ	SIC	ROM	58- 39
216	151	FDR151Z	PHIN	ROM	58- 40
217	151	FDR151Z	SIC	ROM	58- 40
218	151	FLJ151-7475	SIEG	SHIFT REG	65- 54
219	153	T153B1A	SGAI	RAM	18-106
220	153	T153B1B	SGAI	RAM	18-107

SYMBOLS AND CODES EXPLAINED IN INTERPRETER

GENERIC PRODUCT INDEX

IN ORDER OF: (1)GENERIC NO. (2)MFR TYPE NO.

LINE No.	[1] GENERIC NO.	[2] MANUFACTURER TYPE NO.	MFR. CODE	PRODUCT CLASS	PAGE & LINE
1	154	T154D1	SGAI	ROM	46- 32
2	154	T154D1A%	SGAI	CHAR GEN	63- 41
3	154	T154D1B%	SGAI	CHAR GEN	63- 42
4	155	FLJ155-8475	SIEG	SHIFT REG	65- 55
5	160	H160D1	SGAI	SHIFT REG	73- 59
6	161	FLJ161-7490	SIEG	SHIFT REG	67- 60
7	161	FZJ161	SIEG	SHIFT REG	65- 99
8	161	FZJ161	VALG	SHIFT REG	65- 99
9	165	T165D1	SGAI	RAM	20- 96
10	165	FLJ165-8490	SIEG	SHIFT REG	67- 61
11	165	FZJ165	SIEG	SHIFT REG	65-100
12	181	FJJ181-7475	MULB	SHIFT REG	65- 53
13	181	FJJ181-7475	PHIN	SHIFT REG	65- 53
14	181	FJJ181-7475	SIC	SHIFT REG	65- 53
15	188	TM188	TUNH	ROM	46- 20
16	191	FLJ191-7495A	SIEG	SHIFT REG	69- 74
17	195	FLJ195-8495A	SIEG	SHIFT REG	69- 75
18	200	B200	FMI	SPECIAL	87- 40
19	200	M200M1AA	SGAI	CHAR GEN	62-100
20	200	M200M1XX	SGAI	CHAR GEN	62-101
21	0203	TIB0203	TII	SPECIAL	87- 9
22	203	M203	ICC	SHIFT REG	76- 98
23	204	MS204	ECV	ROM	46- 6
24	204	M204	ICC	SHIFT REG	66- 80
25	206	M206	ICC	SHIFT REG	75- 73
26	207	M207	ICC	SHIFT REG	75- 72
27	208	MS208	ECV	ROM	46- 5
28	221	FLJ221-7491A	SIEG	SHIFT REG	82- 34
29	225	FLJ225-8491A	SIEG	SHIFT REG	82- 35
30	231	FLJ231-7494	SIEG	SHIFT REG	66- 78
31	235	FLJ235-8494	SIEG	SHIFT REG	66- 79
32	250	M250D1	SGAI	SPECIAL	88- 23
33	252	M252B1AA	SGAI	SPECIAL	88- 27
34	252	M252B1XX	SGAI	SPECIAL	88- 25
35	252	M252D1AA	SGAI	SPECIAL	88- 28
36	252	M252D1XX	SGAI	SPECIAL	88- 26
37	253	M253B1AA	SGAI	SPECIAL	88- 21
38	253	M253B1XX	SGAI	SPECIAL	88- 19
39	253	M253D1AA	SGAI	SPECIAL	88- 22
40	253	M253D1XX	SGAI	SPECIAL	88- 20
41	254	M254B1XX	SGAI	SPECIAL	88- 24
42	256	RBM256	RKW	SPECIAL	87- 14
43	256	RM256A#1	ECV	ROM	47- 46
44	256	RM256A#2	ECV	ROM	47- 33
45	256	RM256A#3	ECV	ROM	47- 15
46	256	RM256A#4	ECV	ROM	46-104
47	256	RM256A#5	ECV	ROM	46- 12
48	261	FLJ261-7496	SIEG	SHIFT REG	74- 71
49	265	FLJ265-8496	SIEG	SHIFT REG	74- 72
50	311	FLJ311-74198	SIEG	SHIFT REG	77-104
51	314	TMM314AP	TOSJ	RAM	36- 12
52	314	TMM314AP-1	TOSJ	RAM	34- 50
53	314	TMM314AP-3	TOSJ	RAM	35- 45
54	314	TMM314APL	TOSJ	RAM	36- 13
55	314	TMM314APL-1	TOSJ	RAM	33- 62
56	314	TMM314APL-3	TOSJ	RAM	34- 51
57	315	TMM315D	TOSJ	RAM	40- 79
58	315	TMM315D-1	TOSJ	RAM	40- 62
59	315	FLJ315-84198	SIEG	SHIFT REG	77-105
60	321	FLJ321-74199	SIEG	SHIFT REG	77-106
61	323	TMM323D	TOSJ	ROM	57- 33
62	323	TMM323D-1	TOSJ	ROM	57- 32
63	325	FLJ325-84199	SIEG	SHIFT REG	77-107
64	330	M330AB1	SGAI	RAM	32- 84
65	333	TMM333P	TOSJ	ROM	59- 39
66	334	TMM334P	TOSJ	ROM	57- 34
67	361	FLJ361-74118	SIEG	SHIFT REG	75- 88
68	365	FLJ365-84118	SIEG	SHIFT REG	75- 89
69	370	370AJ	TSC	SHIFT REG	65- 29
70	370	370AL	TSC	SHIFT REG	65- 30
71	370	370BL	TSC	SHIFT REG	65- 31
72	370	370CJ	TSC	SHIFT REG	65- 32
73	370	370CL	TSC	SHIFT REG	65- 33
74	370	370ML	TSC	SHIFT REG	65- 34
75	371	FLJ371-74119	SIEG	SHIFT REG	75- 90
76	375	375AJ	TSC	SHIFT REG	65-104
77	375	375AL	TSC	SHIFT REG	65-105
78	375	375BL	TSC	SHIFT REG	65-106
79	375	375CJ	TSC	SHIFT REG	65-107
80	375	375CL	TSC	SHIFT REG	65-108
81	375	375ML	TSC	SHIFT REG	65-109
82	375	FLJ375-84119	SIEG	SHIFT REG	75- 91
83	403	uPB403D	NECJ	ROM	48- 79
84	405	uPB405C	NECJ	ROM	52- 74
85	405	uPB405D	NECJ	ROM	52- 75
86	406	uPB406D	NECJ	ROM	53- 87
87	409	uPB409C	NECJ	ROM	61- 18
88	409	uPB409C-1	NECJ	ROM	61- 19
89	409	uPB409C-2	NECJ	ROM	61- 20
90	409	uPB409D	NECJ	ROM	61- 21
91	409	uPB409D-1	NECJ	ROM	61- 22
92	409	uPB409D-2	NECJ	ROM	61- 23
93	410	uPD410D	NECM	RAM	42- 12
94	410	uPD410D-1	NECJ	RAM	42- 18
95	410	uPD410D-1	NECM	RAM	42- 18
96	410	uPD410D-2	NECJ	RAM	42- 31
97	410	uPD410D-2	NECM	RAM	42- 31
98	410	uPD410D-3	NECM	RAM	40- 86
99	411	uPD411AC	NECJ	RAM	39- 70
100	411	uPD411AC	NECM	RAM	39- 70
101	411	uPD411AC-1	NECJ	RAM	39- 63
102	411	uPD411AC-1	NECM	RAM	39- 63
103	411	uPD411AC-2	NECJ	RAM	39- 61
104	411	uPD411AC-2	NECM	RAM	39- 61
105	411	uPD411AC-E	NECJ	RAM	39- 73
106	411	uPD411D	NECJ	RAM	39- 71
107	411	uPD411D	NECM	RAM	39- 71
108	411	uPD411D-1	NECJ	RAM	39- 64
109	411	uPD411D-1	NECM	RAM	39- 64
110	411	uPD411D-2	NECJ	RAM	39- 62
111	411	uPD411D-2	NECM	RAM	39- 62
112	411	uPD411D-3	NECJ	RAM	39- 60
113	411	uPD411D-3	NECM	RAM	39- 60
114	411	uPD411D-4	NECM	RAM	39- 59
115	412	uPD412C	NECJ	RAM	27- 38
116	412	uPD412D	NECJ	RAM	26- 31
117	414	uPD414AC-E	NECM	RAM	39- 74
118	414	uPD414D-1	NECM	RAM	38- 39
119	416	TMM416D-2	TOSJ	RAM	43- 99
120	416	TMM416D-3	TOSJ	RAM	44- 32
121	416	TMM416D-4	TOSJ	RAM	44- 67
122	416	TMM416P-2	TOSJ	RAM	43-100
123	416	TMM416P-3	TOSJ	RAM	44- 33
124	416	TMM416P-4	TOSJ	RAM	44- 68
125	416	uPD416C	NECJ	RAM	44- 77
126	416	uPD416C-1	NECJ	RAM	44- 71
127	416	uPD416C-1	NECM	RAM	44- 71
128	416	uPD416C-2	NECJ	RAM	44- 36
129	416	uPD416C-2	NECM	RAM	44- 36
130	416	uPD416C-3	NECJ	RAM	43-103
131	416	uPD416C-3	NECM	RAM	43-103
132	416	uPD416C-5	NECM	RAM	43- 47
133	416	uPD416C-E	NECJ	RAM	44- 79
134	416	uPD416D	NECJ	RAM	44- 78
135	416	uPD416D-1	NECJ	RAM	44- 72
136	416	uPD416D-1	NECM	RAM	44- 72
137	416	uPD416D-2	NECJ	RAM	44- 37
138	416	uPD416D-2	NECM	RAM	44- 37
139	416	uPD416D-3	NECJ	RAM	43-104
140	416	uPD416D-3	NECM	RAM	43-104
141	416	uPD416D-5	NECM	RAM	43- 48
142	416	uPD416D-E	NECJ	RAM	44- 80
143	417	uPB417C	NECJ	ROM	55-103
144	417	uPB417D	NECJ	ROM	55-104
145	421	uPD421D	NECM	RAM	37- 82
146	421	uPD421D-1	NECM	RAM	37- 77
147	421	uPD421D-2	NECM	RAM	37- 70
148	421	uPD421D-3	NECM	RAM	37- 69
149	421	uPD421D-5	NECM	RAM	37- 66
150	425	uPB425C	NECJ	ROM	52- 76
151	425	uPB425D	NECJ	ROM	52- 77
152	426	uPB426D	NECJ	ROM	53- 88
153	429	uPB429C	NECJ	ROM	61- 24
154	429	uPB429D	NECJ	ROM	61- 25
155	429	uPB429D-1	NECJ	ROM	61- 26
156	429	uPB429D-2	NECJ	ROM	61- 27
157	441	FLJ441-74164	SIEG	SHIFT REG	81- 75
158	443	uPD443/6508D-1	NECM	RAM	29- 76
159	443	uPD443C	NECJ	RAM	29-107
160	443	uPD443C-1	NECJ	RAM	29- 99
161	443	uPD443D	NECJ	RAM	29-108
162	443	uPD443D-1	NECJ	RAM	29-100
163	444	uPD444C	NECJ	RAM	32- 92
164	444	uPD444C	NECM	RAM	32- 92
165	444	uPD444C-1	NECJ	RAM	33- 16
166	444	uPD444C-1	NECM	RAM	33- 16
167	444	uPD444C-2	NECJ	RAM	35- 46
168	444	uPD444C-2	NECM	RAM	35- 46
169	444	uPD444C-3	NECJ	RAM	33- 27
170	444	uPD444C-3	NECM	RAM	33- 27
171	444	uPD444C#	NECM	RAM	34- 55
172	445	uPD445LC	NECJ	RAM	33- 60
173	445	uPD445LC	NECM	RAM	33- 60
174	445	uPD445LC-1	NECJ	RAM	33- 59
175	445	uPD445LC-1	NECM	RAM	33- 59
176	445	FLJ445-84164	SIEG	SHIFT REG	81- 76
177	450	CCD450ADC	FSC	SPECIAL	87- 7
178	450	CCD450DC	FSC	SPECIAL	87- 8
179	451	FLJ451-74165	SIEG	SHIFT REG	80- 77
180	455	FLJ455-84165	SIEG	SHIFT REG	80- 78
181	458	uPD458D	NECJ	ROM	56- 45
182	461	FLJ461-74166	SIEG	SHIFT REG	77-108
183	465	uPD465D	NECJ	ROM	54- 98
184	465	FLJ465-84166	SIEG	SHIFT REG	77-109
185	468	HM468A10	HITJ	RAM	22- 20
186	468	HM468A10P	HITJ	RAM	22- 21
187	471	uPD471D	NECJ	ROM	52-105
188	472	uPD472D	NECJ	ROM	53- 99
189	472D01	uPD472D01	NECJ	CHAR GEN	62- 61
190	473	uPD473D	NECJ	CHAR GEN	62-109
191	473D01	uPD473D01	NECJ	CHAR GEN	63- 19
192	473D02	uPD473D02	NECJ	CHAR GEN	62- 26
193	473D03	uPD473D03	NECJ	CHAR GEN	63- 9
194	473D04	uPD473D04	NECJ	CHAR GEN	62- 27
195	474	uPD474D	NECJ	CHAR GEN	63- 13
196	474D01	uPD474D01	NECJ	CHAR GEN	63- 8
197	474D02	uPD474D02	NECJ	CHAR GEN	62- 25
198	481	uPD481D-001	NECJ	CHAR GEN	62- 1
199	481	uPD481D-002	NECJ	CHAR GEN	62- 2
200	481	FLJ481-4932	SIEG	SHIFT REG	82- 79
201	482	uPD482D-001	NECJ	CHAR GEN	62- 3
202	482	uPD482D-002	NECJ	CHAR GEN	62- 4
203	485	FLJ485-49832	SIEG	SHIFT REG	82- 80
204	491	FLJ491-49702	SIEG	SHIFT REG	67- 7
205	495	FLJ495-49802	SIEG	SHIFT REG	67- 8
206	500	B500	FMI	SPECIAL	87- 41
207	531	FLJ531-74174	SIEG	SHIFT REG	75- 92
208	535	FLJ535-84174	SIEG	SHIFT REG	75- 93
209	541	FLJ541-74175	SIEG	SHIFT REG	65- 56
210	545	FLJ545-84175	SIEG	SHIFT REG	65- 57
211	551	FLJ551-74194	SIEG	SHIFT REG	69- 76
212	555	FLJ555-84194	SIEG	SHIFT REG	69- 77
213	561	FLH561-74184	SIEG	CODE CONV	64- 68
214	561	FLJ561-74195	SIEG	SHIFT REG	71- 51
215	565	FLH565-84184	SIEG	CODE CONV	64- 69
216	565	FLJ565-84195	SIEG	SHIFT REG	71- 52
217	571	FLH571-74185A	SIEG	CODE CONV	64- 74
218	575	MSM575	OKIJ	ROM	51- 88
219	575	MSM575-01	OKIJ	CHAR GEN	62- 28
220	575	MSM575-01A	OKIJ	CHAR GEN	62- 29

SYMBOLS AND CODES EXPLAINED IN INTERPRETER

GENERIC PRODUCT INDEX

IN ORDER OF: (1)GENERIC NO. (2)MFR TYPE NO.

LINE No.	1 GENERIC NO.	2 MANUFACTURER TYPE NO.	MFR. CODE	PRODUCT CLASS	PAGE & LINE
1	575	MSM575-02	OKIJ	CHAR GEN	62- 30
2	575	MSM575A	OKIJ	ROM	51- 13
3	575	FLH575-84185A	SIEG	CODE CONV	64- 75
4	601	TM601	TUNH	ROM	48- 11
5	612	MS612	RTC	SHIFT REG	84- 66
6	618	MS618	RTC	SHIFT REG	83- 94
7	621	TM621	TUNH	ROM	48- 12
8	622	TM622	TUNH	ROM	50- 31
9	624	TM624	TUNH	ROM	50- 32
10	625	MS625	RTC	SHIFT REG	85- 23
11	686	MC686L	MOTA	SHIFT REG	73- 57
12	686	MC686P	MOTA	SHIFT REG	73- 58
13	768	I768	ICC	SHIFT REG	83- 66
14	769	I769	ICC	SHIFT REG	83- 67
15	801	RT801	MON	SHIFT REG	73- 68
16	802	RT802	MON	SHIFT REG	74- 22
17	803	RD803	MON	SHIFT REG	73- 67
18	803	RH803	MON	SHIFT REG	73- 65
19	804	RD804	MON	SHIFT REG	74- 15
20	804	RH804	MON	SHIFT REG	73- 80
21	806	RD806	MON	SHIFT REG	76- 90
22	806	RH806	MON	SHIFT REG	76- 89
23	807	RT807	MON	SHIFT REG	82- 70
24	808	RT808	MON	SHIFT REG	81- 21
25	809	RT809	MON	SHIFT REG	83-103
26	810	NSC810IJ	NSC	RAM	21-107
27	810	NSC810IN	NSC	RAM	21-108
28	810	NSC810J	NSC	RAM	21-109
29	810	NSC810N	NSC	RAM	21-110
30	813	RT813	MON	SHIFT REG	83- 91
31	821L14	SFF821L14E-20	THCF	RAM	34- 41
32	821L14	SFF821L14E-25	THCF	RAM	34- 78
33	821L14	SFF821L14E-30	THCF	RAM	35- 34
34	821L14	SFF821L14E-45	THCF	RAM	36- 1
35	821L14	SFF821L14J-25	THCF	RAM	34- 79
36	821L14	SFF821L14J-30	THCF	RAM	35- 35
37	821L14	SFF821L14J-45	THCF	RAM	36- 2
38	830	NSC830IJ	NSC	ROM	59- 21
39	830	NSC830IN	NSC	ROM	59- 22
40	830	NSC830J	NSC	ROM	59- 23
41	830	NSC830N	NSC	ROM	59- 24
42	894	MC894P	MOTA	SHIFT REG	65-101
43	1002	MK1002L	AMD	SHIFT REG	85- 26
44	1002	MK1002P	AMD	SHIFT REG	85- 27
45	1005	TDC1005J	TRW	SHIFT REG	84- 77
46	1006	TDC1006J	TRW	SHIFT REG	85- 53
47	1032	SS5-1032-31	GIC	SHIFT REG	83- 90
48	1100	GZF1100D	MULB	SHIFT REG	81- 20
49	1100	GZF1100D	VALG	SHIFT REG	81- 20
50	1100	GZF1100P	MULB	SHIFT REG	81- 35
51	1100	GZF1100P	PHIN	SHIFT REG	81- 35
52	1100	GZF1100P	SIC	SHIFT REG	81- 35
53	1100	GZF1100P	VALG	SHIFT REG	81- 35
54	1101	P1101A1	AMD	RAM	24- 8
55	1101	P1101A1	ITL	RAM	24- 8
56	1101	P1101A	AMD	RAM	24- 13
57	1101	P1101A	ITL	RAM	24- 13
58	1101	1101ADM	AMD	RAM	24- 9
59	1101	C1101A1	AMD	RAM	24- 4
60	1101	C1101A1	ITL	RAM	24- 4
61	1101	C1101A1DM	AMD	RAM	24- 5
62	1101	C1101A51	AMD	RAM	24- 10
63	1101	C1101A	AMD	RAM	24- 11
64	1101	C1101A	ITL	RAM	24- 11
65	1101	C1101ADM	AMD	RAM	24- 12
66	1103	1103-1IK	PHIN	RAM	27-110
67	1103	1103-1IK	SIC	RAM	27-110
68	1103	1103-1XA	PHIN	RAM	28- 1
69	1103	1103-1XA	SIC	RAM	28- 1
70	1103	1103I	SIC	RAM	28- 6
71	1103	1103I	VALG	RAM	28- 6
72	1103	1103IK	PHIN	RAM	28- 2
73	1103	1103IK	SIC	RAM	28- 2
74	1103	1103N	SIC	RAM	28- 7
75	1103	1103N	VALG	RAM	28- 7
76	1103	1103XA	PHIN	RAM	28- 3
77	1103	1103XA	SIC	RAM	28- 3
78	1106	GZF1106D	MULB	SHIFT REG	84- 85
79	1106	GZF1106D	VALG	SHIFT REG	84- 85
80	1106	GZF1106P	MULB	SHIFT REG	84- 91
81	1106	GZF1106P	PHIN	SHIFT REG	84- 91
82	1106	GZF1106P	SIC	SHIFT REG	84- 91
83	1203	MN1203	MATJ	RAM	21- 50
84	1208	MN1208	MATJ	ROM	46- 11
85	1400	ER1400	GIC	ROM	47- 32
86	1400	GZF1400D	MULB	RAM	23- 84
87	1400	GZF1400P	MULB	RAM	23-104
88	1400	GZF1400P	PHIN	RAM	23-104
89	1400	GZF1400P	SIC	RAM	23-104
90	1402	AM1402A51E	AMD	SHIFT REG	85- 68
91	1402	AM1402A51F	AMD	SHIFT REG	85- 69
92	1402	AM1402A59F#1	AMD	SHIFT REG	85- 70
93	1402	AM1402A59F#2	AMD	SHIFT REG	85- 59
94	1402	AM1402A#1	AMD	SHIFT REG	85- 64
95	1402	AM1402A#2	AMD	SHIFT REG	85- 60
96	1402	AM1402ADM#1	AMD	SHIFT REG	85- 65
97	1402	AM1402ADM#2	AMD	SHIFT REG	85- 61
98	1402	AM1402APC#1	AMD	SHIFT REG	85- 66
99	1402	AM1402APC#2	AMD	SHIFT REG	85- 62
100	1402	1402A	AMD	SHIFT REG	85- 63
101	1402	1402AB	PHIN	SHIFT REG	85- 57
102	1402	1402AB	SIC	SHIFT REG	85- 57
103	1402	1402AI	PHIN	SHIFT REG	85- 58
104	1402	1402AI	SIC	SHIFT REG	85- 58
105	1402	DL9-1402A26#1	GIC	SHIFT REG	85- 67
106	1403	AM1403A51F	AMD	SHIFT REG	85-103
107	1403	AM1403A51T	AMD	SHIFT REG	85-104
108	1403	AM1403A59F#1	AMD	SHIFT REG	85-105
109	1403	AM1403A59F#2	AMD	SHIFT REG	85- 94
110	1403	AM1403A#1	AMD	SHIFT REG	85- 99
111	1403	AM1403A#2	AMD	SHIFT REG	85- 95
112	1403	AM1403AHM#1	AMD	SHIFT REG	85-100
113	1403	AM1403AHM#2	AMD	SHIFT REG	85- 96
114	1403	AM1403APC#1	AMD	SHIFT REG	85-101
115	1403	AM1403APC#2	AMD	SHIFT REG	85- 97
116	1403	1403A	AMD	SHIFT REG	85- 98
117	1403	1403ATA	PHIN	SHIFT REG	85- 92
118	1403	1403ATA	SIC	SHIFT REG	85- 92
119	1403	1403AV	PHIN	SHIFT REG	85- 93
120	1403	1403AV	SIC	SHIFT REG	85- 93
121	1404	AM1404A51F	AMD	SHIFT REG	86- 12
122	1404	AM1404A51T	AMD	SHIFT REG	86- 13
123	1404	AM1404A59F#1	AMD	SHIFT REG	86- 14
124	1404	AM1404A59F#2	AMD	SHIFT REG	86- 1
125	1404	AM1404A#1	AMD	SHIFT REG	86- 9
126	1404	AM1404A#2	AMD	SHIFT REG	86- 2
127	1404	AM1404AHM#1	AMD	SHIFT REG	86- 10
128	1404	AM1404AHM#2	AMD	SHIFT REG	86- 3
129	1404	AM1404APC#1	AMD	SHIFT REG	86- 11
130	1404	AM1404APC#2	AMD	SHIFT REG	86- 4
131	1404	1404A	AMD	SHIFT REG	86- 8
132	1404	1404ATA	PHIN	SHIFT REG	85-109
133	1404	1404ATA	SIC	SHIFT REG	85-109
134	1404	1404AV	PHIN	SHIFT REG	85-110
135	1404	1404AV	SIC	SHIFT REG	85-110
136	1405	1405A	AMD	SHIFT REG	85- 83
137	1405	1405K	PHIN	SHIFT REG	85- 79
138	1405	1405K	SIC	SHIFT REG	85- 79
139	1406	AM1406HM	AMD	SHIFT REG	85- 6
140	1406	1406T	AMD	SHIFT REG	85- 2
141	1406	M1406	AMD	SHIFT REG	85- 10
142	1407	AM1407HM	AMD	SHIFT REG	85- 7
143	1407	1407T	AMD	SHIFT REG	85- 3
144	1407	M1407	AMD	SHIFT REG	85- 11
145	1412	MB1412A	FMI	SPECIAL	88- 33
146	1500	HAB1500	MULB	RAM	27-107
147	1500	HAB1500	PHIN	RAM	27-107
148	1500	HAB1500	SIC	RAM	27-107
149	1501	HAB1501	MULB	RAM	27-108
150	1501	HAB1501	PHIN	RAM	27-108
151	1501	HAB1501	SIC	RAM	27-108
152	1502	FR1502E01	WDC	SHIFT REG	84- 14
153	1502	FR1502E1C	WDC	SHIFT REG	83- 11
154	1502	FR1502E02	WDC	SHIFT REG	84- 13
155	1502	FR1502E2C	WDC	SHIFT REG	83- 9
156	1502	FR1502E3C	WDC	SHIFT REG	83- 15
157	1502	FR1502E	WDC	SHIFT REG	84- 16
158	1502	FR1502EC	WDC	SHIFT REG	83- 13
159	1502	FR1502F1C	WDC	SHIFT REG	83- 12
160	1502	FR1502F2C	WDC	SHIFT REG	83- 10
161	1502	FR1502F3C	WDC	SHIFT REG	83- 16
162	1502	FR1502FC	WDC	SHIFT REG	83- 14
163	1502	HAB1502	MULB	RAM	27-109
164	1502	HAB1502	PHIN	RAM	27-109
165	1502	HAB1502	SIC	RAM	27-109
166	1506	AM1506HC	AMD	SHIFT REG	85- 8
167	1506	1506T	AMD	SHIFT REG	85- 4
168	1506	M1506	AMD	SHIFT REG	85- 12
169	1507	AM1507HC	AMD	SHIFT REG	85- 9
170	1507	1507T	AMD	SHIFT REG	85- 5
171	1507	M1507	AMD	SHIFT REG	85- 13
172	1600	CM1600-2C	STX	ROM	57- 52
173	1600	CM1600-2P	STX	ROM	57- 53
174	1600	CM1600-3C	STX	ROM	57- 54
175	1600	CM1600-3P	STX	ROM	57- 55
176	1600	CM1600C	STX	ROM	57- 50
177	1600	CM1600P	STX	ROM	57- 51
178	1694	MC1694L	MOTA	SHIFT REG	73- 56
179	1702	MM1702AQ	NSC	ROM	49- 59
180	1702	AM1702A	AMD	ROM	49- 56
181	1702	AM1702A-1	AMD	ROM	49- 48
182	1702	AM1702A-2	AMD	ROM	49- 52
183	1702	AM1702AL	AMD	ROM	49- 57
184	1702	AM1702AL-1	AMD	ROM	49- 49
185	1702	AM1702AL-2	AMD	ROM	49- 53
186	1702	1702AI	PHIN	ROM	49- 60
187	1702	1702AI	SIC	ROM	49- 60
188	1702	1702AI	VALG	ROM	49- 60
189	1821	CDP1821CD	AMD	RAM	30- 21
190	1821	CDP1821CD	RCA	RAM	30- 21
191	1821	CDP1821CE	RCA	RAM	30- 22
192	1821	CDP1821D	RCA	RAM	30- 23
193	1821	CDP1821E	RCA	RAM	30- 24
194	1821	CDP1821SCD	RCA	RAM	30- 25
195	1821	CDP1821SD	RCA	RAM	30- 26
196	1822	CDP1822CD	RCA	RAM	25- 73
197	1822	CDP1822CE	RCA	RAM	25- 74
198	1822	CDP1822D	RCA	RAM	25- 59
199	1822	CDP1822E	RCA	RAM	25- 60
200	1822	HCMP1822CD	HAC	RAM	25- 29
201	1822	HCMP1822CD#	HAC	RAM	25- 12
202	1822	HCMP1822CP	HAC	RAM	25- 13
203	1823	CDP1823CD	RCA	RAM	22- 1
204	1823	CDP1823CE	RCA	RAM	22- 2
205	1823	CDP1823D	RCA	RAM	22- 3
206	1823	CDP1823E	RCA	RAM	22- 4
207	1824	CDP1824CD	RCA	RAM	21- 15
208	1824	CDP1824CE	RCA	RAM	21- 13
209	1824	CDP1824D	RCA	RAM	21- 16
210	1824	CDP1824E	RCA	RAM	21- 14
211	1824	HCMP1824CD	HAC	RAM	21- 17
212	1824	HCMP1824CP	HAC	RAM	21- 18
213	1824	HCMP1824D	HAC	RAM	21- 19
214	1824	HCMP1824P	HAC	RAM	21- 20
215	1825	CDP1825CD	RCA	RAM	33- 46
216	1825	CDP1825CE	RCA	RAM	33- 47
217	1825	CDP1825D	RCA	RAM	33- 48
218	1825	CDP1825E	RCA	RAM	33- 49
219	1831	CDP1831CD	RCA	ROM	51- 74
220	1831	CDP1831CE	RCA	ROM	51- 75

SYMBOLS AND CODES EXPLAINED IN INTERPRETER

GENERIC PRODUCT INDEX

IN ORDER OF: (1)GENERIC NO. (2)MFR TYPE NO.

LINE No.	1 GENERIC NO.	2 MANUFACTURER TYPE NO.	MFR. CODE	PRODUCT CLASS	PAGE & LINE
1	1831	CDP1831D	RCA	ROM	51- 76
2	1831	CDP1831E	RCA	ROM	51- 77
3	1831	HCMP1831CD	HAC	ROM	51- 72
4	1831	HCMP1831CP	HAC	ROM	51- 86
5	1831	HCMP1831D	HAC	ROM	51- 70
6	1831	HCMP1831D#	HAC	ROM	51- 78
7	1831	HCMP1831P	HAC	ROM	51- 79
8	1832	CDP1832CD	RCA	ROM	51- 80
9	1832	CDP1832CE	RCA	ROM	51- 81
10	1832	CDP1832D	RCA	ROM	51- 82
11	1832	CDP1832E	RCA	ROM	51- 83
12	1832	HCMP1832CD	HAC	ROM	51- 73
13	1832	HCMP1832CP	HAC	ROM	51- 87
14	1832	HCMP1832D	HAC	ROM	51- 71
15	1832	HCMP1832D#	HAC	ROM	51- 84
16	1832	HCMP1832P	HAC	ROM	51- 85
17	1833	CDP1833CD	RCA	ROM	54- 59
18	1833	CDP1833CE	RCA	ROM	54- 60
19	1833	CDP1833D	RCA	ROM	54- 61
20	1833	CDP1833E	RCA	ROM	54- 62
21	1833	HCMP1833CD	HAC	ROM	54- 57
22	1833	HCMP1833D	HAC	ROM	54- 55
23	1833	HCMP1833D#	HAC	ROM	54- 67
24	1833	HCMP1833P	HAC	ROM	54- 68
25	1834	CDP1834CD	RCA	ROM	54- 63
26	1834	CDP1834CE	RCA	ROM	54- 64
27	1834	CDP1834D	RCA	ROM	54- 65
28	1834	CDP1834E	RCA	ROM	54- 66
29	1834	HCMP1834CD	HAC	ROM	54- 58
30	1834	HCMP1834CP	HAC	ROM	54- 70
31	1834	HCMP1834D	HAC	ROM	54- 56
32	1834	HCMP1834D#	HAC	ROM	54- 69
33	1834	HCMP1834P	HAC	ROM	54- 71
34	1835	HCMP1835CD	HAC	ROM	57- 94
35	1835	HCMP1835CP	HAC	ROM	57- 95
36	1835	HCMP1835D	HAC	ROM	57- 98
37	1835	HCMP1835D#	HAC	ROM	57- 90
38	1835	HCMP1835P	HAC	ROM	57- 91
39	1836	HCMP1836CD	HAC	ROM	57- 96
40	1836	HCMP1836CP	HAC	ROM	57- 97
41	1836	HCMP1836D	HAC	ROM	57- 92
42	1836	HCMP1836P	HAC	ROM	57- 93
43	1842	CDP1842CD	RCA	ROM	49- 10
44	2000	C2000	FMI	SPECIAL	87- 42
45	2001	RC2001K	MULB	SHIFT REG	83- 76
46	2001	S2001K	PHIN	SHIFT REG	83- 77
47	2001	S2001K	SIC	SHIFT REG	83- 77
48	2002	RC2002K	MULB	SHIFT REG	83- 95
49	2002	S2002K	PHIN	SHIFT REG	83- 96
50	2002	S2002K	SIC	SHIFT REG	83- 96
51	2003	RC2003K	MULB	SHIFT REG	84- 1
52	2003	S2003K	PHIN	SHIFT REG	84- 2
53	2003	S2003K	SIC	SHIFT REG	84- 2
54	2004	RC2004K	MULB	SHIFT REG	84- 18
55	2004	S2004K	PHIN	SHIFT REG	84- 19
56	2004	S2004K	SIC	SHIFT REG	84- 19
57	2005	RC2005K	MULB	SHIFT REG	85- 14
58	2005	S2005K	PHIN	SHIFT REG	85- 15
59	2005	S2005K	SIC	SHIFT REG	85- 15
60	2006	SDA2006	SIEG	ROM	46-105
61	2010	N2010K	MULB	SHIFT REG	85- 18
62	2010	N2010K	PHIN	SHIFT REG	85- 18
63	2010	N2010K	SIC	SHIFT REG	85- 18
64	2016	TMM2016P	TOSJ	RAM	38- 9
65	2016	TMM2016P-1	TOSJ	RAM	38- 1
66	2027	MCS2027	MTY	CHAR GEN	62- 31
67	2048	HRM2048	ECV	ROM	47- 28
68	2048	HRM2048#1	ECV	ROM	56- 79
69	2048	HRM2048#2	ECV	ROM	53- 7
70	2048	HRM2048#3	ECV	ROM	51- 1
71	2048	HRM2048#4	ECV	ROM	49- 63
72	2048	HRM2048#5	ECV	ROM	47- 45
73	2048	HRM2048#6	ECV	ROM	47- 29
74	2048	RO6-2048S#2	GIC	ROM	51- 2
75	2050	ER2050	GIC	ROM	46-106
76	2051	ER2051	GIC	ROM	46-108
77	2051	ER2051HR	GIC	ROM	46-109
78	2055	ER2055	GIC	ROM	47- 27
79	2091	uPB2091D	NECJ	SHIFT REG	77- 73
80	2101	P2101	AMD	RAM	26- 73
81	2101	P2101-1	AMD	RAM	26- 59
82	2101	P2101-2	AMD	RAM	26- 64
83	2101	P2101A	ITL	RAM	26- 28
84	2101	P2101A-2	ITL	RAM	26- 7
85	2101	P2101A-4	ITL	RAM	26- 52
86	2101	SYC2101-1	SYK	RAM	26- 94
87	2101	SYC2101A	SYK	RAM	26- 82
88	2101	SYC2101A-2	SYK	RAM	26- 76
89	2101	SYC2101A-4	SYK	RAM	26- 88
90	2101	SYP2101-1	SYK	RAM	26- 97
91	2101	SYP2101A	SYK	RAM	26- 85
92	2101	SYP2101A-2	SYK	RAM	26- 79
93	2101	SYP2101A-4	SYK	RAM	26- 91
94	2101	2101A-2F	PHIN	RAM	25- 99
95	2101	2101A-2N	PHIN	RAM	25-100
96	2101	2101A-4F	PHIN	RAM	26- 32
97	2101	2101A-4N	PHIN	RAM	26- 33
98	2101	2101AF	PHIN	RAM	26- 10
99	2101	2101AN	PHIN	RAM	26- 11
100	2101	2101N	PHIN	RAM	26- 69
101	2101	2101N	SIC	RAM	26- 69
102	2101	2101N	VALG	RAM	26- 69
103	2101	C2101	AMD	RAM	26- 70
104	2101	C2101-1	AMD	RAM	26- 57
105	2101	C2101-2	AMD	RAM	26- 61
106	2101	C2101A	ITL	RAM	26- 16
107	2101	C2101A-2	ITL	RAM	25-105
108	2101	C2101A-4	ITL	RAM	26- 38
109	2101	uPD2101ALC	NECJ	RAM	27- 39
110	2101	uPD2101ALC-2	NECJ	RAM	27- 40
111	2101	uPD2101ALC-4	NECJ	RAM	27- 41
112	2101	D2101A	ITL	RAM	26- 19
113	2101	D2101A-2	ITL	RAM	25-108
114	2101	D2101A-4	ITL	RAM	26- 41
115	2102	P2102	AMD	RAM	32- 85
116	2102	P2102-1	AMD	RAM	32- 38
117	2102	P2102-2	AMD	RAM	32- 77
118	2102	P2102A2	ITL	RAM	31- 43
119	2102	P2102A4	ITL	RAM	32- 24
120	2102	P2102A6	ITL	RAM	32- 78
121	2102	P2102A	ITL	RAM	31- 85
122	2102	P2102AL2	ITL	RAM	31- 44
123	2102	P2102AL4	ITL	RAM	32- 25
124	2102	P2102AL	ITL	RAM	31- 86
125	2102	MM2102AJ	NSC	RAM	31- 81
126	2102	MM2102AJ-2	NSC	RAM	31- 39
127	2102	MM2102AJ-2L	NSC	RAM	31- 40
128	2102	MM2102AJ-4	NSC	RAM	32- 20
129	2102	MM2102AJ-4L	NSC	RAM	32- 21
130	2102	MM2102AJ-6	NSC	RAM	32- 73
131	2102	MM2102AJ-6L	NSC	RAM	32- 74
132	2102	MM2102AJ-L	NSC	RAM	31- 82
133	2102	MM2102AN	NSC	RAM	31- 83
134	2102	MM2102AN-2	NSC	RAM	31- 41
135	2102	MM2102AN-2L	NSC	RAM	31- 42
136	2102	MM2102AN-4	NSC	RAM	32- 22
137	2102	MM2102AN-4L	NSC	RAM	32- 23
138	2102	MM2102AN-6	NSC	RAM	32- 75
139	2102	MM2102AN-6L	NSC	RAM	32- 76
140	2102	MM2102AN-L	NSC	RAM	31- 84
141	2102	2102-1DC	FSC	RAM	31-105
142	2102	2102-1DL	FSC	RAM	31-106
143	2102	2102-1DM	FSC	RAM	31-107
144	2102	2102-1FC	FSC	RAM	31-108
145	2102	2102-1FL	FSC	RAM	31-109
146	2102	2102-1FM	FSC	RAM	31-110
147	2102	2102-1PC	FSC	RAM	32- 1
148	2102	2102-2DC	FSC	RAM	32- 45
149	2102	2102-2DL	FSC	RAM	32- 46
150	2102	2102-2DM	FSC	RAM	32- 47
151	2102	2102-2FC	FSC	RAM	32- 48
152	2102	2102-2FL	FSC	RAM	32- 49
153	2102	2102-2FM	FSC	RAM	32- 50
154	2102	2102-2PC	FSC	RAM	32- 51
155	2102	2102DC	SGAI	RAM	32- 86
156	2102	2102FDC	FSC	RAM	31- 59
157	2102	2102FDC	SGAI	RAM	31- 59
158	2102	2102FDL	FSC	RAM	31- 60
159	2102	2102FDM	FSC	RAM	31- 61
160	2102	2102FDM	SGAI	RAM	31- 61
161	2102	2102FFC	FSC	RAM	31- 62
162	2102	2102FFL	FSC	RAM	31- 63
163	2102	2102FFM	FSC	RAM	31- 64
164	2102	2102FPC	FSC	RAM	31- 65
165	2102	2102HDC	FSC	RAM	31- 15
166	2102	2102HDL	FSC	RAM	31- 16
167	2102	2102HDM	FSC	RAM	31- 17
168	2102	2102HFC	FSC	RAM	31- 18
169	2102	2102HFL	FSC	RAM	31- 19
170	2102	2102HFM	FSC	RAM	31- 20
171	2102	2102HPC	FSC	RAM	31- 21
172	2102	2102L1DC	FSC	RAM	32- 2
173	2102	2102L1DL	FSC	RAM	32- 3
174	2102	2102L1DM	FSC	RAM	32- 4
175	2102	2102L1FC	FSC	RAM	32- 5
176	2102	2102L1FL	FSC	RAM	32- 6
177	2102	2102L1FM	FSC	RAM	32- 7
178	2102	2102L1PC	FSC	RAM	32- 8
179	2102	2102L2DC	FSC	RAM	32- 52
180	2102	2102L2DL	FSC	RAM	32- 53
181	2102	2102L2DM	FSC	RAM	32- 54
182	2102	2102L2FC	FSC	RAM	32- 55
183	2102	2102L2FL	FSC	RAM	32- 56
184	2102	2102L2FM	FSC	RAM	32- 57
185	2102	2102L2PC	FSC	RAM	32- 58
186	2102	2102LFDC	FSC	RAM	31- 66
187	2102	2102LFDL	FSC	RAM	31- 67
188	2102	2102LFDM	FSC	RAM	31- 68
189	2102	2102LFFC	FSC	RAM	31- 69
190	2102	2102LFFL	FSC	RAM	31- 70
191	2102	2102LFFM	FSC	RAM	31- 71
192	2102	2102LFPC	FSC	RAM	31- 72
193	2102	2102LHDC	FSC	RAM	31- 22
194	2102	2102LHDL	FSC	RAM	31- 23
195	2102	2102LHDM	FSC	RAM	31- 24
196	2102	2102LHFC	FSC	RAM	31- 25
197	2102	2102LHFL	FSC	RAM	31- 26
198	2102	2102LHFM	FSC	RAM	31- 27
199	2102	2102LHPC	FSC	RAM	31- 28
200	2102	C2102	AMD	RAM	32- 83
201	2102	C2102-1	AMD	RAM	32- 37
202	2102	C2102-2	AMD	RAM	32- 67
203	2102	C2102A2	ITL	RAM	31- 31
204	2102	C2102A4	ITL	RAM	32- 9
205	2102	C2102A6	ITL	RAM	32- 68
206	2102	C2102A	ITL	RAM	31- 73
207	2102	M2102AB1	SGAI	RAM	31- 75
208	2102	M2102AB1-2	SGAI	RAM	31- 33
209	2102	M2102AB1-4	SGAI	RAM	32- 14
210	2102	M2102AB1-6	SGAI	RAM	32- 70
211	2102	M2102AD1	SGAI	RAM	31- 76
212	2102	M2102AD1-2	SGAI	RAM	31- 34
213	2102	M2102AD1-4	SGAI	RAM	32- 15
214	2102	M2102AD1-6	SGAI	RAM	32- 71
215	2102	M2102AF1	SGAI	RAM	31- 77
216	2102	M2102AF1-2	SGAI	RAM	31- 35
217	2102	M2102AF1-4	SGAI	RAM	32- 16
218	2102	M2102AF1-6	SGAI	RAM	32- 72
219	2102	M2102ALB1	SGAI	RAM	31- 78
220	2102	M2102ALB1-2	SGAI	RAM	31- 36

SYMBOLS AND CODES EXPLAINED IN INTERPRETER

GENERIC PRODUCT INDEX

IN ORDER OF: (1)GENERIC NO. (2)MFR TYPE NO.

LINE No.	[1] GENERIC NO.	[2] MANUFACTURER TYPE NO.	MFR. CODE	PRODUCT CLASS	PAGE & LINE
1	2102	M2102ALB1-4	SGAI	RAM	32- 17
2	2102	M2102ALD1	SGAI	RAM	31- 79
3	2102	M2102ALD1-2	SGAI	RAM	31- 37
4	2102	M2102ALD1-4	SGAI	RAM	32- 18
5	2102	M2102ALF1	SGAI	RAM	31- 80
6	2102	M2102ALF1-2	SGAI	RAM	31- 38
7	2102	M2102ALF1-4	SGAI	RAM	32- 19
8	2102	CM2102A4	ITL	RAM	32- 10
9	2102	uPD2102ALC	NECJ	RAM	32- 88
10	2102	uPD2102ALC-2	NECJ	RAM	32- 87
11	2102	uPD2102ALC-4	NECJ	RAM	32- 89
12	2102	D2102A2	ITL	RAM	31- 32
13	2102	D2102A4	ITL	RAM	32- 11
14	2102	D2102A6	ITL	RAM	32- 69
15	2102	D2102A	ITL	RAM	31- 74
16	2102	MC2102A4	ITL	RAM	27- 89
17	2104	P2104A	ITL	RAM	39- 58
18	2104	P2104A-1	ITL	RAM	38- 80
19	2104	P2104A-2	ITL	RAM	39- 2
20	2104	P2104A-3	ITL	RAM	39- 32
21	2104	P2104A-4	ITL	RAM	39- 49
22	2104	D2104A	ITL	RAM	39- 51
23	2104	D2104A-1	ITL	RAM	38- 63
24	2104	D2104A-2	ITL	RAM	38- 91
25	2104	D2104A-3	ITL	RAM	39- 13
26	2104	D2104A-4	ITL	RAM	39- 41
27	2105	HM2105	HITJ	RAM	22- 65
28	2106	HM2106	HITJ	RAM	22- 50
29	2107	P2107C	ITL	RAM	39- 33
30	2107	P2107C-1	ITL	RAM	38- 81
31	2107	P2107C-2	ITL	RAM	39- 3
32	2107	P2107C-4	ITL	RAM	39- 50
33	2107	D2107C	ITL	RAM	39- 14
34	2107	D2107C-1	ITL	RAM	38- 64
35	2107	D2107C-2	ITL	RAM	38- 92
36	2107	D2107C-4	ITL	RAM	39- 42
37	2109	2109-3	ITL	RAM	43- 28
38	2109	2109-4	ITL	RAM	43- 30
39	2109	C2109-3	ITL	RAM	43- 29
40	2109	C2109-4	ITL	RAM	43- 31
41	2110	HM2110	HITJ	RAM	28- 29
42	2110	HM2110-1	HITJ	RAM	28- 21
43	2110	HM2110-2	HITJ	RAM	28- 18
44	2111	P2111	AMD	RAM	26- 74
45	2111	P2111-1	AMD	RAM	26- 60
46	2111	P2111-2	AMD	RAM	26- 65
47	2111	P2111A	ITL	RAM	26- 29
48	2111	P2111A-2	ITL	RAM	26- 8
49	2111	P2111A-4	ITL	RAM	26- 53
50	2111	SYC2111-1	SYK	RAM	26- 95
51	2111	SYC2111A	SYK	RAM	26- 83
52	2111	SYC2111A-2	SYK	RAM	26- 77
53	2111	SYC2111A-4	SYK	RAM	26- 89
54	2111	SYP2111-1	SYK	RAM	26- 98
55	2111	SYP2111A	SYK	RAM	26- 86
56	2111	SYP2111A-2	SYK	RAM	26- 80
57	2111	SYP2111A-4	SYK	RAM	26- 92
58	2111	2111-1I	PHIN	RAM	26- 55
59	2111	2111-1I	VALG	RAM	26- 55
60	2111	2111-1N	SIC	RAM	26- 56
61	2111	2111A-2F	PHIN	RAM	25-101
62	2111	2111A-2N	PHIN	RAM	25-102
63	2111	2111A-4F	PHIN	RAM	26- 34
64	2111	2111A-4N	PHIN	RAM	26- 35
65	2111	2111AF	PHIN	RAM	26- 12
66	2111	2111AN	PHIN	RAM	26- 13
67	2111	C2111	AMD	RAM	26- 71
68	2111	C2111-1	AMD	RAM	26- 58
69	2111	C2111-2	AMD	RAM	26- 62
70	2111	C2111A	ITL	RAM	26- 17
71	2111	C2111A-2	ITL	RAM	25-106
72	2111	C2111A-4	ITL	RAM	26- 39
73	2111	uPD2111ALC	NECJ	RAM	27- 42
74	2111	uPD2111ALC-2	NECJ	RAM	27- 43
75	2111	uPD2111ALC-4	NECJ	RAM	27- 44
76	2111	D2111A	ITL	RAM	26- 20
77	2111	D2111A-2	ITL	RAM	25-109
78	2111	D2111A-4	ITL	RAM	26- 42
79	2112	HM2112	HITJ	RAM	28- 8
80	2112	HM2112-1	HITJ	RAM	28- 9
81	2112	HM2112A	HITJ	RAM	30- 88
82	2112	HM2112B	HITJ	RAM	30- 89
83	2112	P2112	AMD	RAM	26- 75
84	2112	P2112-2	AMD	RAM	26- 66
85	2112	P2112A	ITL	RAM	26- 30
86	2112	P2112A-2	ITL	RAM	26- 9
87	2112	P2112A-4	ITL	RAM	26- 54
88	2112	SYC2112-1	SYK	RAM	26- 96
89	2112	SYC2112A	SYK	RAM	26- 84
90	2112	SYC2112A-2	SYK	RAM	26- 78
91	2112	SYC2112A-4	SYK	RAM	26- 90
92	2112	SYP2112-1	SYK	RAM	26- 99
93	2112	SYP2112A	SYK	RAM	26- 87
94	2112	SYP2112A-2	SYK	RAM	26- 81
95	2112	SYP2112A-4	SYK	RAM	26- 93
96	2112	2112A-2F	PHIN	RAM	25-103
97	2112	2112A-2N	PHIN	RAM	25-104
98	2112	2112A-4F	PHIN	RAM	26- 36
99	2112	2112A-4N	PHIN	RAM	26- 37
100	2112	2112AF	PHIN	RAM	26- 14
101	2112	2112AN	PHIN	RAM	26- 15
102	2112	C2112	AMD	RAM	26- 72
103	2112	C2112-2	AMD	RAM	26- 63
104	2112	C2112A	ITL	RAM	26- 18
105	2112	C2112A-2	ITL	RAM	25-107
106	2112	C2112A-4	ITL	RAM	26- 40
107	2112	D2112A	ITL	RAM	26- 21
108	2112	D2112A-2	ITL	RAM	25-110
109	2112	D2112A-4	ITL	RAM	26- 43
110	2114	NMC2114AJ	NSC	RAM	33- 82
111	2114	NMC2114AN	NSC	RAM	33- 83
112	2114	NMC2114APJ	NSC	RAM	33- 84
113	2114	NMC2114APN	NSC	RAM	33- 85
114	2114	P2114	ITL	RAM	35-109
115	2114	P2114-2	ITL	RAM	34- 36
116	2114	P2114-3	ITL	RAM	35- 30
117	2114	P2114A4	ITL	RAM	34- 37
118	2114	P2114A5	ITL	RAM	34- 77
119	2114	P2114AL1	ITL	RAM	33- 80
120	2114	P2114AL2	ITL	RAM	33- 90
121	2114	P2114AL3	ITL	RAM	33- 98
122	2114	P2114AL4	ITL	RAM	34- 38
123	2114	P2114L2	ITL	RAM	34- 39
124	2114	P2114L3	ITL	RAM	35- 31
125	2114	P2114L	ITL	RAM	35-110
126	2114	MM2114J	NSC	RAM	35- 98
127	2114	MM2114J-2	NSC	RAM	34- 28
128	2114	MM2114J-2L	NSC	RAM	34- 29
129	2114	MM2114J-3	NSC	RAM	35- 18
130	2114	MM2114J-3L	NSC	RAM	35- 19
131	2114	MM2114J-L	NSC	RAM	35- 99
132	2114	MM2114N	NSC	RAM	35-100
133	2114	MM2114N-2	NSC	RAM	34- 30
134	2114	MM2114N-2L	NSC	RAM	34- 31
135	2114	MM2114N-3	NSC	RAM	35- 20
136	2114	MM2114N-3L	NSC	RAM	35- 21
137	2114	MM2114N-L	NSC	RAM	35-101
138	2114	SYC2114	SYK	RAM	36- 33
139	2114	SYC2114-2	SYK	RAM	36- 21
140	2114	SYC2114-3	SYK	RAM	36- 27
141	2114	SYC2114L	SYK	RAM	36- 34
142	2114	SYC2114L-2	SYK	RAM	36- 22
143	2114	SYC2114L-3	SYK	RAM	36- 28
144	2114	SYC2114LV	SYK	RAM	36- 35
145	2114	SYC2114LV-2	SYK	RAM	36- 23
146	2114	SYC2114LV-3	SYK	RAM	36- 29
147	2114	SYMC2114	SYK	RAM	36- 8
148	2114	IM2114-2CJN	INL	RAM	36- 44
149	2114	SYMC2114-3	SYK	RAM	35- 41
150	2114	IM2114-2CPN	INL	RAM	36- 45
151	2114	IM2114-3CJN	INL	RAM	36- 66
152	2114	MN2114	MATJ	RAM	35-102
153	2114	IM2114-3CPN	INL	RAM	36- 67
154	2114	IM2114-L2CJN	INL	RAM	36- 46
155	2114	IM2114-L2MJN	INL	RAM	36- 47
156	2114	IM2114-L3CJN	INL	RAM	36- 68
157	2114	IM2114-L3MJN	INL	RAM	36- 69
158	2114	MPS2114-30	MTY	RAM	35- 22
159	2114	IM2114-LCJN	INL	RAM	36- 90
160	2114	MPS2114-35	MTY	RAM	35- 60
161	2114	IM2114-LMJN	INL	RAM	36- 91
162	2114	MPS2114-45	MTY	RAM	35-103
163	2114	IM2114CJN	INL	RAM	36- 92
164	2114	MPS2114-50	MTY	RAM	36- 20
165	2114	IM2114CPN	INL	RAM	36- 93
166	2114	MPS2114L-30	MTY	RAM	35- 23
167	2114	IM2114L2CPN	INL	RAM	36- 48
168	2114	MPS2114L-35	MTY	RAM	35- 61
169	2114	IM2114L2MJN/883B	INL	RAM	36- 49
170	2114	MPS2114L-45	MTY	RAM	35-104
171	2114	SYP2114	SYK	RAM	36- 36
172	2114	IM2114L3CPN	INL	RAM	36- 70
173	2114	SYP2114-2	SYK	RAM	36- 24
174	2114	IM2114L3MJN/883B	INL	RAM	36- 71
175	2114	SYP2114-3	SYK	RAM	36- 30
176	2114	IM2114LCPN	INL	RAM	36- 94
177	2114	MPT2114-45	MTY	RAM	35-105
178	2114	SYP2114L	SYK	RAM	36- 37
179	2114	IM2114LMJN/883B	INL	RAM	36- 95
180	2114	MPT2114L-45	MTY	RAM	35-106
181	2114	SYP2114L-2	SYK	RAM	36- 25
182	2114	SYP2114L-3	SYK	RAM	36- 31
183	2114	SYP2114LV	SYK	RAM	36- 38
184	2114	SYP2114LV-2	SYK	RAM	36- 26
185	2114	SYP2114LV-3	SYK	RAM	36- 32
186	2114	MSM2114	OKIJ	RAM	35-107
187	2114	MSM2114-2RS	OKIJ	RAM	34- 32
188	2114	MSM2114-3RS	OKIJ	RAM	35- 24
189	2114	MSM2114L	OKIJ	RAM	35-108
190	2114	MSM2114L-2	OKIJ	RAM	34- 33
191	2114	MSM2114L-3	OKIJ	RAM	35- 25
192	2114	2114-2CA	EMM	RAM	33-107
193	2114	2114-2CB	EMM	RAM	33-108
194	2114	2114-2CE	EMM	RAM	33-109
195	2114	2114-3CA	EMM	RAM	34- 92
196	2114	2114-3CB	EMM	RAM	34- 93
197	2114	2114-3CE	EMM	RAM	34- 94
198	2114	2114-UCA	EMM	RAM	36- 78
199	2114	2114A-4	ITL	RAM	36-106
200	2114	2114A-5	ITL	RAM	37- 6
201	2114	2114AL-1	ITL	RAM	36-103
202	2114	2114AL-2	ITL	RAM	36-104
203	2114	2114AL-3	ITL	RAM	36-105
204	2114	2114AL-4	ITL	RAM	36-107
205	2114	2114UCB	EMM	RAM	36- 79
206	2114	2114UCE	EMM	RAM	36- 80
207	2114	2114UMA	EMM	RAM	36- 81
208	2114	TMS2114-15NL	TII	RAM	33- 99
209	2114	TMS2114-20NL	TII	RAM	34- 53
210	2114	TMS2114-25NL	TII	RAM	34- 83
211	2114	TMS2114-45NL	TII	RAM	36- 15
212	2114	TMS2114L-15NL	TII	RAM	33-100
213	2114	TMS2114L-20NL	TII	RAM	34- 54
214	2114	TMS2114L-25NL	TII	RAM	34- 84
215	2114	TMS2114L-45NL	TII	RAM	36- 16
216	2114	L2114-2CA	EMM	RAM	34- 13
217	2114	L2114-2CB	EMM	RAM	34- 14
218	2114	L2114-2CE	EMM	RAM	34- 15
219	2114	L2114-3CA	EMM	RAM	35- 1
220	2114	L2114-3CB	EMM	RAM	35- 2

SYMBOLS AND CODES EXPLAINED IN INTERPRETER

GENERIC PRODUCT INDEX

IN ORDER OF: (1)GENERIC NO. (2)MFR TYPE NO.

LINE No.	[1] GENERIC NO.	[2] MANUFACTURER TYPE NO.	MFR. CODE	PRODUCT CLASS	PAGE & LINE
1	2114	L2114-3CE	EMM	RAM	35- 3
2	2114	L2114-UCA	EMM	RAM	36- 96
3	2114	L2114UCB	EMM	RAM	36- 97
4	2114	L2114UCE	EMM	RAM	36- 98
5	2114	L2114UMA	EMM	RAM	36- 99
6	2114	M2114-3MA	EMM	RAM	35- 6
7	2114	M2114-3ME	EMM	RAM	35- 7
8	2114	M2114-UMA	EMM	RAM	36-100
9	2114	uPD2114LC	NECJ	RAM	36- 17
10	2114	uPD2114LC	NECM	RAM	36- 17
11	2114	uPD2114LC-1	NECJ	RAM	35- 47
12	2114	uPD2114LC-1	NECM	RAM	35- 47
13	2114	uPD2114LC-2	NECJ	RAM	34- 85
14	2114	uPD2114LC-2	NECM	RAM	34- 85
15	2114	uPD2114LC-3	NECJ	RAM	34- 56
16	2114	uPD2114LC-3	NECM	RAM	34- 56
17	2114	uPD2114LC-5	NECJ	RAM	33-101
18	2114	uPD2114LC-5	NECM	RAM	33-101
19	2114	uPD2114LD	NECJ	RAM	36- 18
20	2114	uPD2114LD	NECM	RAM	36- 18
21	2114	uPD2114LD-1	NECJ	RAM	35- 48
22	2114	uPD2114LD-1	NECM	RAM	35- 48
23	2114	uPD2114LD-2	NECJ	RAM	34- 86
24	2114	uPD2114LD-2	NECM	RAM	34- 86
25	2114	uPD2114LD-3	NECJ	RAM	34- 57
26	2114	uPD2114LD-3	NECM	RAM	34- 57
27	2114	uPD2114LD-5	NECJ	RAM	33-102
28	2114	uPD2114LD-5	NECM	RAM	33-102
29	2114	D2114	INL	RAM	35- 70
30	2114	D2114	ITL	RAM	35- 70
31	2114	D2114-2	INL	RAM	34- 3
32	2114	D2114-2	ITL	RAM	34- 3
33	2114	D2114-3	INL	RAM	34- 99
34	2114	D2114-3	ITL	RAM	34- 99
35	2114	D2114A4	ITL	RAM	34- 4
36	2114	D2114A5	ITL	RAM	34- 65
37	2114	D2114AL2	ITL	RAM	33- 81
38	2114	D2114AL3	ITL	RAM	33- 94
39	2114	D2114AL4	ITL	RAM	34- 5
40	2114	D2114L2	INL	RAM	34- 6
41	2114	D2114L2	ITL	RAM	34- 6
42	2114	D2114L3	INL	RAM	34-100
43	2114	D2114L3	ITL	RAM	34-100
44	2114	D2114L	INL	RAM	35- 71
45	2114	D2114L	ITL	RAM	35- 71
46	2114	V2114-UCB	EMM	RAM	35- 50
47	2114	V2114-UCE	EMM	RAM	35- 51
48	2114	EA2114L-15PC	EAI	RAM	33- 95
49	2114	EA2114L-20PC	EAI	RAM	34- 8
50	2114	EA2114L-25PC	EAI	RAM	34- 66
51	2114	EA2114L-30PC	EAI	RAM	34-103
52	2114	EA2114LPC	EAI	RAM	35- 73
53	2114	MCM2114-20L	MOTA	RAM	34- 22
54	2114	MCM2114-20P	MOTA	RAM	34- 23
55	2114	MCM2114-25L	MOTA	RAM	34- 71
56	2114	MCM2114-25P	MOTA	RAM	34- 72
57	2114	MCM2114-30L	MOTA	RAM	35- 12
58	2114	MCM2114-30P	MOTA	RAM	35- 13
59	2114	MCM2114-45L	MOTA	RAM	35- 87
60	2114	MCM2114-45P	MOTA	RAM	35- 88
61	2114	MCM2114C20	MOTA	RAM	34- 24
62	2114	MCM2114C25	MOTA	RAM	34- 73
63	2114	MCM2114C30	MOTA	RAM	35- 14
64	2114	MCM2114C45	MOTA	RAM	35- 89
65	2114	MCM2114L	MOTA	RAM	35- 90
66	2114	F2114-2DC	FSC	RAM	34- 9
67	2114	MCM2114P20	MOTA	RAM	34- 25
68	2114	F2114-2PC	FSC	RAM	34- 10
69	2114	MCM2114P25	MOTA	RAM	34- 74
70	2114	F2114-3DC	FSC	RAM	34-104
71	2114	MCM2114P30	MOTA	RAM	35- 15
72	2114	F2114-3PC	FSC	RAM	34-105
73	2114	MCM2114P45	MOTA	RAM	35- 91
74	2114	F2114DC	FSC	RAM	35- 74
75	2114	MCM2114P	MOTA	RAM	35- 92
76	2114	F2114L2DC	FSC	RAM	34- 11
77	2114	F2114L2PC	FSC	RAM	34- 12
78	2114	F2114L3DC	FSC	RAM	34-106
79	2114	F2114L3PC	FSC	RAM	34-107
80	2114	F2114LDC	FSC	RAM	35- 75
81	2114	F2114LPC	FSC	RAM	35- 76
82	2114	F2114PC	FSC	RAM	35- 77
83	2114	N2114-UMA	EMM	RAM	35- 28
84	2114	N2114-UME	EMM	RAM	35- 29
85	2114	MCS2114-30	MTY	RAM	35- 16
86	2114	MCS2114-35	MTY	RAM	35- 58
87	2114	MCS2114-45	MTY	RAM	35- 93
88	2114	MCS2114L-30	MTY	RAM	35- 17
89	2114	MCS2114L-35	MTY	RAM	35- 59
90	2114	MCS2114L-45	MTY	RAM	35- 94
91	2114	MCT2114-45	MTY	RAM	35- 95
92	2114	MCT2114L-45	MTY	RAM	35- 96
93	2114	MD2114	ITL	RAM	35- 97
94	2114	MD2114A4	ITL	RAM	34- 26
95	2114	MD2114A5	ITL	RAM	34- 75
96	2114	MD2114L2	INL	RAM	32- 94
97	2114	MD2114L3	INL	RAM	32- 96
98	2114	MD2114L4	ITL	RAM	34- 27
99	2114	MD2114L5	ITL	RAM	34- 76
100	2114	MD2114L	INL	RAM	32-100
101	2115	D2115A	ITL	RAM	30- 96
102	2115	D2115A-2	ITL	RAM	30-108
103	2115	D2115AL	ITL	RAM	30- 97
104	2115	D2115AL-2	ITL	RAM	30-109
105	2115	D2115H2	ITL	RAM	30- 91
106	2115	D2115H3	ITL	RAM	30- 93
107	2115	D2115H4	ITL	RAM	30- 94
108	2115	MCM2115AC-45	MOTA	RAM	30-102
109	2115	MCM2115AC-55	MOTA	RAM	30-104
110	2115	MCM2115AC-70	MOTA	RAM	31- 4
111	2115	MCM2115AL	MOTA	RAM	30- 86
112	2115	MD2115A	ITL	RAM	30-106
113	2115	MD2115AL	ITL	RAM	31- 6
114	2117	2117-2	ITL	RAM	44- 81
115	2117	2117-3	ITL	RAM	44- 90
116	2117	2117-4	ITL	RAM	44-100
117	2117	C2117-2	ITL	RAM	43- 70
118	2117	C2117-3	ITL	RAM	43-107
119	2117	C2117-4	ITL	RAM	44- 40
120	2117	C2117-5	ITL	RAM	44-109
121	2117	D2117-2	ITL	RAM	44- 82
122	2117	D2117-3	ITL	RAM	44- 91
123	2117	D2117-4	ITL	RAM	44-101
124	2118	D2118-3	ITL	RAM	43- 50
125	2118	D2118-4	ITL	RAM	43- 56
126	2118	D2118-7	ITL	RAM	43- 71
127	2118	MD2118-4	ITL	RAM	43- 64
128	2118	MD2118-7	ITL	RAM	43- 88
129	2125	D2125A	ITL	RAM	30- 98
130	2125	D2125A-2	ITL	RAM	30-110
131	2125	D2125AL	ITL	RAM	30- 99
132	2125	D2125AL-2	ITL	RAM	31- 1
133	2125	D2125H1	ITL	RAM	30- 90
134	2125	D2125H2	ITL	RAM	30- 92
135	2125	D2125H3	ITL	RAM	31- 51
136	2125	D2125H4	ITL	RAM	30- 95
137	2125	MCM2125AC-45	MOTA	RAM	30-103
138	2125	MCM2125AC-55	MOTA	RAM	30-105
139	2125	MCM2125AC-70	MOTA	RAM	31- 5
140	2125	MCM2125AL	MOTA	RAM	30- 87
141	2125	MD2125A	ITL	RAM	30-107
142	2125	MD2125AL	ITL	RAM	31- 7
143	2128	MSM2128	OKIJ	RAM	38- 16
144	2128	MSM2128-1	OKIJ	RAM	38- 17
145	2141	MK2141J-2	MOS	RAM	38- 20
146	2141	MK2141J-3	MOS	RAM	38- 22
147	2141	MK2141N-2	MOS	RAM	38- 21
148	2141	MK2141N-3	MOS	RAM	38- 23
149	2141	NMC2141J	NSC	RAM	40- 91
150	2141	NMC2141N	NSC	RAM	40- 92
151	2141	P2141-3	ITL	RAM	40-101
152	2141	P2141-4	ITL	RAM	40- 95
153	2141	P2141-5	ITL	RAM	41- 44
154	2141	P2141L3	ITL	RAM	40-102
155	2141	P2141L4	ITL	RAM	41- 22
156	2141	P2141L5	ITL	RAM	41- 45
157	2141	2141-2	EMM	RAM	43- 4
158	2141	2141-2	ITL	RAM	43- 4
159	2141	2141-3	EMM	RAM	43- 6
160	2141	2141-3	ITL	RAM	43- 6
161	2141	2141-4	EMM	RAM	43- 10
162	2141	2141-4	ITL	RAM	43- 10
163	2141	2141-5	EMM	RAM	43- 14
164	2141	2141-5	ITL	RAM	43- 14
165	2141	2141-UCB	EMM	RAM	40- 89
166	2141	2141-UCE	EMM	RAM	40- 90
167	2141	2141L-3	ITL	RAM	43- 7
168	2141	2141L-4	ITL	RAM	43- 11
169	2141	2141L-5	ITL	RAM	43- 15
170	2141	L2141-3	EMM	RAM	42- 17
171	2141	L2141-4	EMM	RAM	42- 29
172	2141	L2141-5	EMM	RAM	42- 50
173	2141	D2141-2	ITL	RAM	43- 5
174	2141	D2141-3	ITL	RAM	43- 8
175	2141	D2141-4	ITL	RAM	43- 12
176	2141	D2141-5	ITL	RAM	43- 16
177	2141	D2141L-3	ITL	RAM	43- 9
178	2141	D2141L-4	ITL	RAM	43- 13
179	2141	D2141L-5	ITL	RAM	43- 17
180	2142	NMC2142AJ	NSC	RAM	33- 86
181	2142	NMC2142AN	NSC	RAM	33- 87
182	2142	NMC2142APJ	NSC	RAM	33- 88
183	2142	NMC2142APN	NSC	RAM	33- 89
184	2142	P2142-2	ITL	RAM	34- 40
185	2142	P2142-3	ITL	RAM	35- 32
186	2142	P2142L3	ITL	RAM	35- 33
187	2142	P2142L	ITL	RAM	32-101
188	2142	SYC2142	SYK	RAM	36- 5
189	2142	SYC2142-2	SYK	RAM	34- 44
190	2142	SYC2142-3	SYK	RAM	35- 38
191	2142	SYC2142L	SYK	RAM	36- 6
192	2142	SYC2142L-2	SYK	RAM	34- 45
193	2142	SYC2142L-3	SYK	RAM	35- 39
194	2142	SYC2142LV	SYK	RAM	36- 7
195	2142	SYC2142LV-2	SYK	RAM	34- 46
196	2142	SYC2142LV-3	SYK	RAM	35- 40
197	2142	SYP2142	SYK	RAM	36- 9
198	2142	SYP2142-2	SYK	RAM	34- 47
199	2142	SYP2142-3	SYK	RAM	35- 42
200	2142	SYP2142L	SYK	RAM	36- 10
201	2142	SYP2142L-2	SYK	RAM	34- 48
202	2142	SYP2142L-3	SYK	RAM	35- 43
203	2142	SYP2142LV	SYK	RAM	36- 11
204	2142	SYP2142LV-2	SYK	RAM	34- 49
205	2142	SYP2142LV-3	SYK	RAM	35- 44
206	2142	2142	ITL	RAM	35- 66
207	2142	2142-2	ITL	RAM	33-110
208	2142	2142-3	ITL	RAM	34- 95
209	2142	2142L3	ITL	RAM	34- 96
210	2142	2142L	ITL	RAM	35- 67
211	2142	C2142	ITL	RAM	35- 68
212	2142	C2142-2	ITL	RAM	34- 1
213	2142	C2142-3	ITL	RAM	34- 97
214	2142	C2142L	ITL	RAM	35- 69
215	2142	C2142L-2	ITL	RAM	34- 2
216	2142	C2142L-3	ITL	RAM	34- 98
217	2142	D2142	ITL	RAM	35- 72
218	2142	D2142-2	ITL	RAM	34- 7
219	2142	D2142-3	ITL	RAM	34-101
220	2142	D2142L3	ITL	RAM	34-102

SYMBOLS AND CODES EXPLAINED IN INTERPRETER

GENERIC PRODUCT INDEX

IN ORDER OF: (1)GENERIC NO. (2)MFR TYPE NO.

LINE No.	1 GENERIC NO.	2 MANUFACTURER TYPE NO.	MFR. CODE	PRODUCT CLASS	PAGE & LINE
1	2142	D2142L	ITL	RAM	32- 97
2	2147	MK2147J-55	MOS	RAM	40- 46
3	2147	MK2147J-70	MOS	RAM	40- 47
4	2147	MK2147J-85	MOS	RAM	38- 27
5	2147	MK2147J-90	MOS	RAM	40- 48
6	2147	MK2147N-55	MOS	RAM	38- 25
7	2147	MK2147N-70	MOS	RAM	38- 26
8	2147	MK2147N-85	MOS	RAM	38- 28
9	2147	MM2147J	NSC	RAM	40- 73
10	2147	MM2147J-3	NSC	RAM	40- 59
11	2147	MM2147J-L	NSC	RAM	40- 74
12	2147	MM2147N	NSC	RAM	40- 75
13	2147	MM2147N-3	NSC	RAM	40- 60
14	2147	MM2147N-L	NSC	RAM	40- 76
15	2147	SYC2147	SYK	RAM	40- 77
16	2147	SYC2147-3	SYK	RAM	40- 61
17	2147	SYC2147L	SYK	RAM	40- 78
18	2147	2147	INL	RAM	42-108
19	2147	2147	ITL	RAM	42-108
20	2147	2147-3	INL	RAM	40- 17
21	2147	2147-6	ITL	RAM	43- 2
22	2147	2147H-3	ITL	RAM	42-105
23	2147	2147H-4	ITL	RAM	42-106
24	2147	2147L	ITL	RAM	42-109
25	2147	TMS2147-5JDL	TII	RAM	38- 31
26	2147	TMS2147-5NL	TII	RAM	40- 63
27	2147	TMS2147-7JDL	TII	RAM	38- 32
28	2147	TMS2147-7JL	TII	RAM	38- 33
29	2147	TMS2147-7NL	TII	RAM	40- 81
30	2147	TMS2147-9JDL	TII	RAM	38- 34
31	2147	TMS2147-9JL	TII	RAM	38- 35
32	2147	TMS2147-9NL	TII	RAM	38- 36
33	2147	uPD2147D	NECM	RAM	42- 14
34	2147	uPD2147D-2	NECJ	RAM	42- 10
35	2147	uPD2147D-2	NECM	RAM	42- 10
36	2147	uPD2147D-3	NECJ	RAM	42- 6
37	2147	uPD2147D-3	NECM	RAM	42- 6
38	2147	MBM2147E	FMI	RAM	42- 9
39	2147	MBM2147H	FMI	RAM	42- 5
40	2147	D2147	ITL	RAM	42-110
41	2147	D2147-3	ITL	RAM	42-107
42	2147	D2147H1	ITL	RAM	40- 50
43	2147	D2147H2	ITL	RAM	40- 51
44	2147	D2147H3	ITL	RAM	40- 52
45	2147	D2147H	ITL	RAM	40- 64
46	2147	D2147HL	ITL	RAM	40- 65
47	2147	D2147L	ITL	RAM	43- 1
48	2147	MCM2147C55	MOTA	RAM	40- 55
49	2147	MCM2147C70	MOTA	RAM	40- 68
50	2147	MCM2147C85	MOTA	RAM	40- 82
51	2147	MCM2147C100	MOTA	RAM	40- 87
52	2147	MCM2147P55	MOTA	RAM	40- 56
53	2147	MCM2147P70	MOTA	RAM	40- 69
54	2147	MCM2147P85	MOTA	RAM	40- 83
55	2147	MCM2147P100	MOTA	RAM	40- 88
56	2147	MD2147	INL	RAM	43- 3
57	2147	MD2147	ITL	RAM	43- 3
58	2147	MD2147H3	ITL	RAM	40- 57
59	2147	MD2147H	ITL	RAM	40- 70
60	2148	MBM2148-55L	FMI	RAM	33- 69
61	2148	MBM2148-70L	FMI	RAM	33- 76
62	2148	D2148H3	ITL	RAM	33- 65
63	2148	D2148H	ITL	RAM	33- 72
64	2148	D2148HL3	ITL	RAM	33- 66
65	2148	D2148HL	ITL	RAM	33- 73
66	2148	MD2148H	ITL	RAM	33- 79
67	2149	MBM2149-45	FMI	RAM	33- 64
68	2149	MBM2149-55	FMI	RAM	33- 70
69	2149	MBM2149-55L	FMI	RAM	33- 71
70	2149	MBM2149-70	FMI	RAM	33- 77
71	2149	MBM2149-70L	FMI	RAM	33- 78
72	2149	D2149H2	ITL	RAM	33- 63
73	2149	D2149H3	ITL	RAM	33- 67
74	2149	D2149H	ITL	RAM	33- 74
75	2149	D2149HL3	ITL	RAM	33- 68
76	2149	D2149HL	ITL	RAM	33- 75
77	2164	uPB2164D	NECJ	SHIFT REG	81- 93
78	2167	uPD2167	NECM	RAM	45- 10
79	2170	uPB2170D	NECJ	RAM	18- 64
80	2175	uPB2175D	NECJ	SHIFT REG	73- 31
81	2195	uPB2195D	NECJ	SHIFT REG	72- 34
82	2198	uPB2198D	NECJ	SHIFT REG	78- 79
83	2200	uPB2200D	NECJ	RAM	23- 48
84	2202	uPB2202D	NECJ	RAM	23- 63
85	2205	uPB2205D	NECJ	RAM	28-105
86	2206	uPB2206D	NECJ	RAM	23- 49
87	2308	uPD2308AC	NECM	ROM	54- 93
88	2308	uPD2308AD	NECM	ROM	54- 94
89	2308	uPD2308C	NECJ	ROM	54-104
90	2308	uPD2308D	NECJ	ROM	54-105
91	2308	EA2308AC	EAI	ROM	54- 74
92	2308	EA2308AL	EAI	ROM	54-106
93	2308	EA2308AP	EAI	ROM	54- 75
94	2316	MM2316ED	NSC	ROM	58- 7
95	2316	MM2316EN	NSC	ROM	58- 8
96	2316	R2316BC	RKW	ROM	57- 60
97	2316	R2316BCE	RKW	ROM	57- 64
98	2316	R2316BMT	RKW	ROM	57- 68
99	2316	R2316BP	RKW	ROM	57- 61
100	2316	R2316BPE	RKW	ROM	57- 65
101	2316	R2316EC	RKW	ROM	57- 62
102	2316	R2316ECE	RKW	ROM	57- 66
103	2316	R2316EMT	RKW	ROM	57- 69
104	2316	R2316EP	RKW	ROM	57- 63
105	2316	R2316EPE	RKW	ROM	57- 67
106	2316	SYC2316A	SYK	ROM	57- 74
107	2316	SYC2316B	SYK	ROM	57- 72
108	2316	SYC2316B-3	SYK	ROM	57- 70
109	2316	MPS2316	MTY	ROM	58- 42
110	2316	SYP2316A	SYK	ROM	57- 75
111	2316	SYP2316B	SYK	ROM	57- 73
112	2316	SYP2316B-3	SYK	ROM	57- 71
113	2316	M2316E-D1	SGAI	ROM	58- 6
114	2316	uPD2316EC	NECJ	ROM	58- 27
115	2316	uPD2316EC#	NECM	ROM	58- 28
116	2316	uPD2316ED	NECJ	ROM	58- 29
117	2316	uPD2316ED#	NECM	ROM	58- 30
118	2316	EA2316ADC	EAI	ROM	58- 34
119	2316	EA2316ADM	EAI	ROM	58- 35
120	2316	MCS2316	MTY	ROM	58- 41
121	2332	R2332-3C	RKW	ROM	59- 83
122	2332	R2332-3CE	RKW	ROM	59- 84
123	2332	R2332-3CMT	RKW	ROM	59- 85
124	2332	R2332-3P	RKW	ROM	59- 86
125	2332	R2332-3PE	RKW	ROM	59- 87
126	2332	R2332-4LC	RKW	ROM	60- 34
127	2332	R2332-4LCE	RKW	ROM	60- 35
128	2332	R2332-4LP	RKW	ROM	60- 36
129	2332	R2332-4LPE	RKW	ROM	60- 37
130	2332	R2332-35LC	RKW	ROM	60- 32
131	2332	R2332-35LP	RKW	ROM	60- 33
132	2332	R2332C	RKW	ROM	59- 96
133	2332	R2332CE	RKW	ROM	59- 97
134	2332	R2332CMT	RKW	ROM	59- 98
135	2332	R2332LC	RKW	ROM	60- 38
136	2332	R2332LCE	RKW	ROM	60- 39
137	2332	R2332LP	RKW	ROM	60- 40
138	2332	R2332LPE	RKW	ROM	60- 41
139	2332	R2332P	RKW	ROM	59- 99
140	2332	R2332PE	RKW	ROM	59-100
141	2332	SYC2332	SYK	ROM	59- 54
142	2332	SYC2332-3	SYK	ROM	59- 50
143	2332	MN2332	MATJ	ROM	59- 49
144	2332	MPS2332	MTY	ROM	60- 7
145	2332	SYP2332	SYK	ROM	59- 56
146	2332	SYP2332-3	SYK	ROM	59- 52
147	2332	TMM2332P	TOSJ	ROM	59- 37
148	2332	S2332	AMI	ROM	59- 48
149	2332	uPD2332AC	NECM	ROM	59- 66
150	2332	uPD2332AD	NECM	ROM	59- 67
151	2332	uPD2332BC	NECM	ROM	59- 68
152	2332	uPD2332BD	NECM	ROM	59- 69
153	2332	uPD2332C	NECJ	ROM	59-102
154	2332	uPD2332C	NECM	ROM	59-102
155	2332	uPD2332D	NECJ	ROM	59-103
156	2332	uPD2332D	NECM	ROM	59-103
157	2332	MCS2332	MTY	ROM	60- 6
158	2333	SYC2333	SYK	ROM	59- 55
159	2333	SYC2333-3	SYK	ROM	59- 51
160	2333	SYP2333	SYK	ROM	59- 57
161	2333	SYP2333-3	SYK	ROM	59- 53
162	2364	R2364A2C	RKW	ROM	60- 97
163	2364	R2364A2CE	RKW	ROM	60- 98
164	2364	R2364A2P	RKW	ROM	60- 99
165	2364	R2364A2PE	RKW	ROM	60-100
166	2364	R2364A3C	RKW	ROM	61- 7
167	2364	R2364A3CE	RKW	ROM	61- 8
168	2364	R2364A3P	RKW	ROM	61- 9
169	2364	R2364A3PE	RKW	ROM	61- 10
170	2364	R2364A25C	RKW	ROM	60-105
171	2364	R2364A25CE	RKW	ROM	60-106
172	2364	R2364A25P	RKW	ROM	61- 1
173	2364	R2364A25PE	RKW	ROM	61- 2
174	2364	R2364B2C	RKW	ROM	60-101
175	2364	R2364B2CE	RKW	ROM	60-102
176	2364	R2364B2P	RKW	ROM	60-103
177	2364	R2364B2PE	RKW	ROM	60-104
178	2364	R2364B3C	RKW	ROM	61- 11
179	2364	R2364B3CE	RKW	ROM	61- 12
180	2364	R2364B3P	RKW	ROM	61- 13
181	2364	R2364B3PE	RKW	ROM	61- 14
182	2364	R2364B25C	RKW	ROM	61- 3
183	2364	R2364B25CE	RKW	ROM	61- 4
184	2364	R2364B25P	RKW	ROM	61- 5
185	2364	R2364B25PE	RKW	ROM	61- 6
186	2364	SYC2364	SYK	ROM	60- 48
187	2364	SYC2364-3	SYK	ROM	60- 67
188	2364	SYP2364	SYK	ROM	60- 49
189	2364	SYP2364-3	SYK	ROM	60- 68
190	2364	TMM2364P	TOSJ	ROM	60- 47
191	2364	S2364	AMI	ROM	60- 62
192	2364	uPD2364C	NECJ	ROM	60- 63
193	2364	uPD2364C	NECM	ROM	60- 63
194	2364	uPD2364D	NECJ	ROM	60- 64
195	2364	uPD2364D	NECM	ROM	60- 64
196	2376	AY5-2376	GIC	CODE CONV	64- 93
197	2376	KR2376	SMC	CODE CONV	64- 94
198	2401	P2401	AMD	SHIFT REG	86- 24
199	2401	C2401	AMD	SHIFT REG	86- 23
200	2410	N2410I	MULB	ROM	47- 92
201	2410	N2410I	PHIN	ROM	47- 92
202	2410	N2410I	SIC	ROM	47- 92
203	2411	N2411I	MULB	ROM	47- 93
204	2411	N2411I	PHIN	ROM	47- 93
205	2411	N2411I	SIC	ROM	47- 93
206	2502	AM2502DC	AMD	SHIFT REG	77- 64
207	2502	AM2502DM	AMD	SHIFT REG	77- 65
208	2502	AM2502FM	AMD	SHIFT REG	77- 66
209	2502	AM2502PC	AMD	SHIFT REG	77- 67
210	2503	AM2503DC	AMD	SHIFT REG	77- 68
211	2503	AM2503DM	AMD	SHIFT REG	77- 69
212	2503	AM2503FM	AMD	SHIFT REG	77- 70
213	2503	AM2503PC	AMD	SHIFT REG	77- 71
214	2503	2503V	PHIN	SHIFT REG	85-102
215	2504	HM2504	HITJ	RAM	23- 54
216	2504	HM2504-1	HITJ	RAM	23- 44
217	2504	AM2504DC	AMD	SHIFT REG	83- 59
218	2504	AM2504DM	AMD	SHIFT REG	83- 60
219	2504	AM2504FM	AMD	SHIFT REG	83- 61
220	2504	AM2504PC	AMD	SHIFT REG	83- 62

SYMBOLS AND CODES EXPLAINED IN INTERPRETER

GENERIC PRODUCT INDEX

IN ORDER OF: (1)GENERIC NO. (2)MFR TYPE NO.

LINE No.	[1] GENERIC NO.	[2] MANUFACTURER TYPE NO.	MFR. CODE	PRODUCT CLASS	PAGE & LINE
1	2505	2505K	AMD	SHIFT REG	85- 80
2	2505	2505K	PHIN	SHIFT REG	85- 80
3	2505	2505K	SIC	SHIFT REG	85- 80
4	2505	2505K	VALG	SHIFT REG	85- 80
5	2508	TMS2508-25JL	TII	ROM	56- 1
6	2508	TMS2508-30JL	TII	ROM	56- 6
7	2510	HM2510	HITJ	RAM	29- 14
8	2510	HM2510-1	HITJ	RAM	28- 95
9	2510	HM2510-2	HITJ	RAM	28- 87
10	2511	HM2511	HITJ	RAM	29- 15
11	2511	HM2511-1	HITJ	RAM	28- 96
12	2513	RO3-2513	GIC	CHAR GEN	62- 48
13	2513	2513IXCM2140	PHIN	CHAR GEN	62- 50
14	2513	2513IXCMXXXX#1	PHIN	CHAR GEN	63- 20
15	2513	2513IXCMXXXX#2	PHIN	CHAR GEN	63- 21
16	2514	2514NXCMXXXX	PHIN	ROM	51- 6
17	2516	2516N	VALG	CHAR GEN	62- 33
18	2516	TMS2516JL	TII	ROM	59- 13
19	2524	2524N	VALG	SHIFT REG	85- 82
20	2525	UA2525D#1	SOD	ROM	47- 42
21	2525	UA2525D#2	SOD	ROM	47- 98
22	2525	UA2525D#3	SOD	ROM	49- 80
23	2525	UA2525D#4	SOD	ROM	53- 2
24	2529	2529N	SIC	SHIFT REG	85- 54
25	2529	2529N	VALG	SHIFT REG	85- 54
26	2529	2529V	PHIN	SHIFT REG	85- 51
27	2529	2529V	SIC	SHIFT REG	85- 51
28	2532	NMC2532Q	NSC	ROM	60- 30
29	2532	TMS2532JL	TII	ROM	60- 29
30	2532	MCM2532C	MOTA	ROM	60- 21
31	2532	MCM2532L	MOTA	ROM	60- 22
32	2548	UA2548#1	SOD	ROM	49- 32
33	2548	UA2548#2	SOD	ROM	50- 10
34	2548	UA2548#3	SOD	ROM	53- 5
35	2548	UA2548#4	SOD	ROM	56- 77
36	2564	TMS2564JL	TII	ROM	60- 96
37	2572	UA2572D	SOD	ROM	49- 74
38	2608	2608I	VALG	ROM	54- 99
39	2613	2613-15F	MULB	RAM	40- 98
40	2613	2613-15F	PHIN	RAM	40- 98
41	2613	2613-15F	SIC	RAM	40- 98
42	2613	2613-15F	VALG	RAM	40- 98
43	2613	2613-15I	MULB	RAM	40- 99
44	2613	2613-15I	PHIN	RAM	40- 99
45	2613	2613-15I	SIC	RAM	40- 99
46	2613	2613-15I	VALG	RAM	40- 99
47	2613	2613-15N	MULB	RAM	40-100
48	2613	2613-15N	PHIN	RAM	40-100
49	2613	2613-15N	SIC	RAM	40-100
50	2613	2613-15N	VALG	RAM	40-100
51	2613	2613-20F	MULB	RAM	40-109
52	2613	2613-20F	PHIN	RAM	40-109
53	2613	2613-20F	SIC	RAM	40-109
54	2613	2613-20F	VALG	RAM	40-109
55	2613	2613-20I	MULB	RAM	40-110
56	2613	2613-20I	PHIN	RAM	40-110
57	2613	2613-20I	SIC	RAM	40-110
58	2613	2613-20I	VALG	RAM	40-110
59	2613	2613-20N	MULB	RAM	41- 1
60	2613	2613-20N	PHIN	RAM	41- 1
61	2613	2613-20N	SIC	RAM	41- 1
62	2613	2613-20N	VALG	RAM	41- 1
63	2613	2613-25F	MULB	RAM	41- 27
64	2613	2613-25F	PHIN	RAM	41- 27
65	2613	2613-25F	SIC	RAM	41- 27
66	2613	2613-25F	VALG	RAM	41- 27
67	2613	2613-25I	MULB	RAM	41- 28
68	2613	2613-25I	PHIN	RAM	41- 28
69	2613	2613-25I	SIC	RAM	41- 28
70	2613	2613-25I	VALG	RAM	41- 28
71	2613	2613-25N	MULB	RAM	41- 29
72	2613	2613-25N	PHIN	RAM	41- 29
73	2613	2613-25N	SIC	RAM	41- 29
74	2613	2613-25N	VALG	RAM	41- 29
75	2613	2613-45F	MULB	RAM	41- 81
76	2613	2613-45F	PHIN	RAM	41- 81
77	2613	2613-45F	SIC	RAM	41- 81
78	2613	2613-45F	VALG	RAM	41- 81
79	2613	2613-45I	MULB	RAM	41- 82
80	2613	2613-45I	PHIN	RAM	41- 82
81	2613	2613-45I	SIC	RAM	41- 82
82	2613	2613-45I	VALG	RAM	41- 82
83	2613	2613-45N	MULB	RAM	41- 83
84	2613	2613-45N	PHIN	RAM	41- 83
85	2613	2613-45N	SIC	RAM	41- 83
86	2613	2613-45N	VALG	RAM	41- 83
87	2614	2614-15F	MULB	RAM	37- 43
88	2614	2614-15F	PHIN	RAM	37- 43
89	2614	2614-15F	SIC	RAM	37- 43
90	2614	2614-15F	VALG	RAM	37- 43
91	2614	2614-15I	MULB	RAM	37- 44
92	2614	2614-15I	PHIN	RAM	37- 44
93	2614	2614-15I	SIC	RAM	37- 44
94	2614	2614-15I	VALG	RAM	37- 44
95	2614	2614-15N	MULB	RAM	37- 45
96	2614	2614-15N	PHIN	RAM	37- 45
97	2614	2614-15N	SIC	RAM	37- 45
98	2614	2614-15N	VALG	RAM	37- 45
99	2614	2614-20F	MULB	RAM	37- 52
100	2614	2614-20F	PHIN	RAM	37- 52
101	2614	2614-20F	SIC	RAM	37- 52
102	2614	2614-20F	VALG	RAM	37- 52
103	2614	2614-20I	MULB	RAM	37- 53
104	2614	2614-20I	PHIN	RAM	37- 53
105	2614	2614-20I	SIC	RAM	37- 53
106	2614	2614-20I	VALG	RAM	37- 53
107	2614	2614-20N	MULB	RAM	37- 54
108	2614	2614-20N	PHIN	RAM	37- 54
109	2614	2614-20N	SIC	RAM	37- 54
110	2614	2614-20N	VALG	RAM	37- 54
111	2614	2614-25F	MULB	RAM	37- 46
112	2614	2614-25F	PHIN	RAM	37- 46
113	2614	2614-25F	SIC	RAM	37- 46
114	2614	2614-25F	VALG	RAM	37- 46
115	2614	2614-25I	MULB	RAM	37- 47
116	2614	2614-25I	PHIN	RAM	37- 47
117	2614	2614-25I	SIC	RAM	37- 47
118	2614	2614-25I	VALG	RAM	37- 47
119	2614	2614-25N	MULB	RAM	37- 48
120	2614	2614-25N	PHIN	RAM	37- 48
121	2614	2614-25N	SIC	RAM	37- 48
122	2614	2614-25N	VALG	RAM	37- 48
123	2614	2614-45F	MULB	RAM	37- 49
124	2614	2614-45F	PHIN	RAM	37- 49
125	2614	2614-45F	SIC	RAM	37- 49
126	2614	2614-45F	VALG	RAM	37- 49
127	2614	2614-45I	MULB	RAM	37- 50
128	2614	2614-45I	PHIN	RAM	37- 50
129	2614	2614-45I	SIC	RAM	37- 50
130	2614	2614-45I	VALG	RAM	37- 50
131	2614	2614-45N	MULB	RAM	37- 51
132	2614	2614-45N	PHIN	RAM	37- 51
133	2614	2614-45N	SIC	RAM	37- 51
134	2614	2614-45N	VALG	RAM	37- 51
135	2670	2670I	MULB	CHAR GEN	63- 31
136	2670	2670I	PHIN	CHAR GEN	63- 31
137	2670	2670I	SIC	CHAR GEN	63- 31
138	2670	2670I	VALG	CHAR GEN	63- 31
139	2670	2670N	MULB	CHAR GEN	63- 32
140	2670	2670N	PHIN	CHAR GEN	63- 32
141	2670	2670N	SIC	CHAR GEN	63- 32
142	2670	2670N	VALG	CHAR GEN	63- 32
143	2704	M2704D1	SGAI	ROM	52- 97
144	2704	EA2704DC	EAI	ROM	52- 96
145	2704	EA2704DL	EAI	ROM	52- 98
146	2704	EA2704DM	EAI	ROM	52- 99
147	2708	MM2708Q	NSC	ROM	56- 29
148	2708	MM2708Q-1	NSC	ROM	56- 10
149	2708	AM2708DC	AMD	ROM	56- 12
150	2708	AM2708DM	AMD	ROM	56- 13
151	2708	ID2708	ITL	ROM	56- 21
152	2708	C2708#	AMD	ROM	56- 14
153	2708	TMS2708-35JL	TII	ROM	56- 11
154	2708	TMS2708JL	TII	ROM	56- 36
155	2708	M2708-1D1	SGAI	ROM	56- 9
156	2708	M2708-4D1	SGAI	ROM	56- 44
157	2708	M2708D1	SGAI	ROM	56- 23
158	2708	D2708	ITL	ROM	56- 15
159	2708	D2708-1	ITL	ROM	56- 7
160	2708	D2708-6	ITL	ROM	56- 41
161	2708	D2708L	ITL	ROM	56- 16
162	2708	EA2708DC	EAI	ROM	56- 17
163	2708	EA2708DL	EAI	ROM	56- 39
164	2708	EA2708DM	EAI	ROM	56- 42
165	2708	F2708-1DC	FSC	ROM	56- 8
166	2708	F2708DC	FSC	ROM	56- 18
167	2708	F2708DL	FSC	ROM	56- 19
168	2708	F2708DM	FSC	ROM	56- 20
169	2708	MCM2708C	MOTA	ROM	56- 24
170	2708	MCM2708L	MOTA	ROM	56- 25
171	2708	SMJ2708JM	TII	ROM	56- 34
172	2708	MD2708	ITL	ROM	56- 28
173	2716	MK2716J-5	MOS	ROM	58-103
174	2716	MK2716J-6	MOS	ROM	58-108
175	2716	MK2716J-7	MOS	ROM	59- 16
176	2716	MK2716J-8	MOS	ROM	59- 7
177	2716	MK2716T-5	MOS	ROM	58-104
178	2716	MK2716T-6	MOS	ROM	58-109
179	2716	MK2716T-7	MOS	ROM	59- 1
180	2716	MK2716T-8	MOS	ROM	59- 8
181	2716	MM2716Q-1	NSC	ROM	58-110
182	2716	MM2716Q-2	NSC	ROM	59- 2
183	2716	MM2716QE	NSC	ROM	59- 9
184	2716	MM2716QM	NSC	ROM	59- 10
185	2716	ID2716	ITL	ROM	58-100
186	2716	MN2716	MATJ	ROM	58- 46
187	2716	MSM2716AS	OKIJ	ROM	59- 17
188	2716	TMS2716JL	TII	ROM	59- 14
189	2716	TMS2716L	MOTA	ROM	59- 15
190	2716	uPD2716	NECM	ROM	58- 12
191	2716	uPD2716D	NECJ	ROM	58- 47
192	2716	uPD2716D	NECM	ROM	58- 47
193	2716	MBM2716	FMI	ROM	59- 4
194	2716	D2716	ITL	ROM	58- 45
195	2716	D2716-1	ITL	ROM	59- 33
196	2716	D2716-2	ITL	ROM	59- 34
197	2716	D2716-5	ITL	ROM	59- 35
198	2716	D2716-6	ITL	ROM	59- 36
199	2716	EA2716	EAI	ROM	57- 58
200	2716	F2716DC	FSC	ROM	59- 3
201	2716	MCM2716C	MOTA	ROM	59- 5
202	2716	MCM2716L	MOTA	ROM	59- 6
203	2716	MD2716	ITL	ROM	58-101
204	2724	NMC2724Q-A	NSC	ROM	57- 35
205	2724	NMC2724Q-B	NSC	ROM	57- 36
206	2732	NMC2732Q	NSC	ROM	60- 31
207	2732	TMM2732D	TOSJ	ROM	59- 38
208	2732	uPD2732	NECM	ROM	60- 13
209	2732	uPD2732D	NECJ	ROM	60- 11
210	2732	MBM2732	FMI	ROM	60- 18
211	2732	D2732	ITL	ROM	60- 9
212	2732	D2732-6	ITL	ROM	60- 12
213	2732	D2732A	ITL	ROM	60- 8
214	2758	MM2758Q-A	NSC	ROM	56- 30
215	2758	MM2758Q-B	NSC	ROM	56- 31
216	2758	TMS2758JL0	TII	ROM	56- 37
217	2758	TMS2758JL1	TII	ROM	56- 38
218	2758	D2758	ITL	ROM	54-110
219	2764	MK2764J-8	MOS	ROM	60- 94
220	2764	MK2764T-8	MOS	ROM	60- 95

SYMBOLS AND CODES EXPLAINED IN INTERPRETER

GENERIC PRODUCT INDEX

IN ORDER OF: (1)GENERIC NO. (2)MFR TYPE NO.

LINE No.	[1] GENERIC NO.	[2] MANUFACTURER TYPE NO.	MFR. CODE	PRODUCT CLASS	PAGE & LINE
1	2764	D2764	ITL	ROM	60- 14
2	2802	AM2802DC	AMD	SHIFT REG	85- 71
3	2802	AM2802DM	AMD	SHIFT REG	85- 72
4	2802	AM2802PC	AMD	SHIFT REG	85- 73
5	2803	AM2803HC	AMD	SHIFT REG	85-106
6	2803	AM2803HM	AMD	SHIFT REG	85-107
7	2803	AM2803PC	AMD	SHIFT REG	85-108
8	2804	AM2804HC	AMD	SHIFT REG	86- 15
9	2804	AM2804HM	AMD	SHIFT REG	86- 16
10	2804	AM2804PC	AMD	SHIFT REG	86- 17
11	2805	AM2805HC	AMD	SHIFT REG	85- 84
12	2805	AM2805HM	AMD	SHIFT REG	85- 81
13	2806	AM2806HC	AMD	SHIFT REG	86- 6
14	2806	AM2806HM	AMD	SHIFT REG	86- 5
15	2807	AM2807PC	AMD	SHIFT REG	85- 85
16	2808	AM2808PC	AMD	SHIFT REG	86- 7
17	2809	AM2809HC	AMD	SHIFT REG	85- 33
18	2809	AM2809HM	AMD	SHIFT REG	85- 28
19	2809	AM2809PC	AMD	SHIFT REG	85- 34
20	2810	AM2810DC	AMD	SHIFT REG	85- 29
21	2810	AM2810DM	AMD	SHIFT REG	85- 30
22	2812	AM2812ADC	AMD	SHIFT REG	84- 7
23	2812	AM2812ADM	AMD	SHIFT REG	84- 8
24	2812	AM2812DC	AMD	SHIFT REG	84- 5
25	2812	AM2812DM	AMD	SHIFT REG	84- 6
26	2813	AM2813ADC	AMD	SHIFT REG	84- 11
27	2813	AM2813ADM	AMD	SHIFT REG	84- 12
28	2813	AM2813DC	AMD	SHIFT REG	84- 9
29	2813	AM2813DM	AMD	SHIFT REG	84- 10
30	2814	AM2814DC	AMD	SHIFT REG	85- 35
31	2814	AM2814DM	AMD	SHIFT REG	85- 36
32	2814	AM2814PC	AMD	SHIFT REG	85- 37
33	2833	AM2833DC	AMD	SHIFT REG	86- 18
34	2833	AM2833DM	AMD	SHIFT REG	86- 19
35	2833	AM2833PC	AMD	SHIFT REG	86- 20
36	2841	AM2841DC	AMD	SHIFT REG	84- 79
37	2841	AM2841DM	AMD	SHIFT REG	84- 80
38	2855	AM2855DC	AMD	SHIFT REG	85- 41
39	2855	AM2855DM	AMD	SHIFT REG	85- 42
40	2855	AM2855PC	AMD	SHIFT REG	85- 43
41	2856	AM2856HC	AMD	SHIFT REG	85- 55
42	2856	AM2856HM	AMD	SHIFT REG	85- 56
43	2857	AM2857DC	AMD	SHIFT REG	85- 89
44	2857	AM2857DM	AMD	SHIFT REG	85- 90
45	2857	AM2857PC	AMD	SHIFT REG	85- 91
46	2918	uPB2918D	NECJ	SHIFT REG	65- 69
47	3004	HNVM3004	HAC	ROM	52- 90
48	3008	HNVM3008	HAC	ROM	55-105
49	3101	P3101	AMD	RAM	20- 71
50	3101	P3101	ITL	RAM	20- 71
51	3101	P3101A	AMD	RAM	20- 33
52	3101	P3101A	ITL	RAM	20- 33
53	3101	AM3101ADC	AMD	RAM	20- 6
54	3101	AM3101ADM	AMD	RAM	20- 7
55	3101	AM3101AFM	AMD	RAM	20- 8
56	3101	AM3101APC	AMD	RAM	20- 9
57	3101	AM3101DM	AMD	RAM	20- 64
58	3101	AM3101FM	AMD	RAM	20- 65
59	3101	RC3101AF	MULB	RAM	20- 56
60	3101	C3101	AMD	RAM	20- 66
61	3101	C3101	ITL	RAM	20- 66
62	3101	C3101A	AMD	RAM	20- 26
63	3101	C3101A	ITL	RAM	20- 26
64	3101	C3101ADM	AMD	RAM	19- 97
65	3101	3101E	AMD	RAM	20- 18
66	3101	S3101AF	PHIN	RAM	20- 58
67	3101	S3101AF	VALG	RAM	20- 58
68	3101	D3101	ITL	RAM	20- 68
69	3101	D3101A	ITL	RAM	20- 27
70	3101	N3101AB	MULB	RAM	20- 30
71	3101	N3101AF	MULB	RAM	20- 31
72	3101	N3101AF	PHIN	RAM	20- 31
73	3101	N3101AF	SIC	RAM	20- 31
74	3101	N3101AF	VALG	RAM	20- 31
75	3101	N3101AN	PHIN	RAM	20- 32
76	3101	N3101AN	SIC	RAM	20- 32
77	3101	N3101AN	VALG	RAM	20- 32
78	3114	TMS3114JC	AMD	SHIFT REG	85- 31
79	3114	TMS3114NC	AMD	SHIFT REG	85- 32
80	3200	MM3200-2C	STX	ROM	60- 1
81	3200	MM3200-3C	STX	ROM	60- 5
82	3200	MM3200-C	STX	ROM	59-107
83	3200	CM3200-2C	STX	ROM	59-108
84	3200	CM3200-2D	STX	ROM	59-109
85	3200	CM3200-2P	STX	ROM	59-110
86	3200	CM3200-3C	STX	ROM	60- 2
87	3200	CM3200-3D	STX	ROM	60- 3
88	3200	CM3200-3P	STX	ROM	60- 4
89	3200	CM3200-C	STX	ROM	59-104
90	3200	CM3200-D	STX	ROM	59-105
91	3200	CM3200-P	STX	ROM	59-106
92	3242	D3242	ITL	SPECIAL	88- 9
93	3255	3255-9-7K	FSC	CHAR GEN	63- 17
94	3256	3256-9-7K	FSC	CHAR GEN	63- 18
95	3257	3257-9-7C	FSC	CHAR GEN	62- 32
96	3258	3258-9-7K	FSC	CHAR GEN	62- 49
97	3260	3260-91-7R	FSC	CHAR GEN	62- 44
98	3260	3260-92-7R	FSC	CHAR GEN	62- 45
99	3271	SP3271B	PHIN	SHIFT REG	66- 84
100	3271	SP3271B	SIC	SHIFT REG	66- 84
101	3271	RCP3271B	MULB	SHIFT REG	66- 83
102	3301	P3301	ITL	ROM	47- 76
103	3301	P3301A	ITL	ROM	47- 69
104	3301	D3301A	ITL	ROM	47- 68
105	3302	P3302	ITL	ROM	49- 83
106	3302	P3302-4	ITL	ROM	49- 85
107	3302	D3302A4	ITL	ROM	49-103
108	3302	D3302A	ITL	ROM	49-101
109	3304	D3304A4	ITL	ROM	51- 8
110	3304	D3304A6	ITL	ROM	51- 9
111	3304	D3304A	ITL	ROM	51- 7
112	3307	3307-4-5F	FSC	SHIFT REG	85- 16
113	3316	SYC3316	SYK	ROM	57- 83
114	3316	SYD3316	SYK	ROM	57- 84
115	3322	P3322	ITL	ROM	49- 84
116	3322	P3322-4	ITL	ROM	49- 86
117	3322	D3322A4	ITL	ROM	49-104
118	3322	D3322A	ITL	ROM	49-102
119	3324	C3324A4	ITL	ROM	51- 58
120	3324	C3324A	ITL	ROM	51- 56
121	3324	D3324A4	ITL	ROM	51- 59
122	3324	D3324A	ITL	ROM	51- 57
123	3326	3326-4-5E	FSC	SHIFT REG	84- 99
124	3329	3329-9-5F	FSC	SHIFT REG	85- 78
125	3330	3330-9-5F	FSC	SHIFT REG	85- 76
126	3331	3331-9-5F	FSC	SHIFT REG	85- 77
127	3333	3333-9-7K	FSC	SHIFT REG	84- 78
128	3341	AM3341DC	AMD	SHIFT REG	84- 81
129	3341	AM3341DM	AMD	SHIFT REG	84- 82
130	3341	AM3341PC	AMD	SHIFT REG	84- 83
131	3341	3341-9-7K	FSC	SHIFT REG	74- 46
132	3342	3342	FSC	SHIFT REG	84- 84
133	3347	3347	FSC	SHIFT REG	84-103
134	3348	3348	FSC	SHIFT REG	84- 3
135	3349	3349	FSC	SHIFT REG	84- 4
136	3355	AM3355DC	AMD	SHIFT REG	86- 21
137	3355	AM3355PC	AMD	SHIFT REG	86- 22
138	3383	3383-9-5F	FSC	SHIFT REG	85- 52
139	3400	ER3400	GIC	ROM	53- 97
140	3501	3501-9-6G	FSC	ROM	47- 41
141	3507	3507-9-6G	FSC	ROM	49- 30
142	3512	3512-9-6G	FSC	ROM	49- 31
143	3512	3512-9-7C	FSC	ROM	49- 23
144	3513	3513-9-7C	FSC	ROM	49- 67
145	3514	3514-91-7R	FSC	ROM	51- 91
146	3514	3514-92-7R	FSC	ROM	51- 92
147	3525	UA3525D#1	SOD	ROM	47- 43
148	3525	UA3525D#2	SOD	ROM	47- 99
149	3525	UA3525D#3	SOD	ROM	49- 81
150	3525	UA3525D#4	SOD	ROM	53- 3
151	3525	UA3525F#1	SOD	ROM	47- 44
152	3525	UA3525F#2	SOD	ROM	47-100
153	3525	UA3525F#3	SOD	ROM	49- 82
154	3525	UA3525F#4	SOD	ROM	53- 4
155	3532	3532-9A-7K	FSC	RAM	27- 85
156	3532	3532-9B-7K	FSC	RAM	27- 86
157	3534	3534-9-7T	FSC	RAM	28- 4
158	3539	3539DC	FSC	RAM	27- 73
159	3539	3539UCD	EMM	RAM	27- 78
160	3539	3539UCP	EMM	RAM	27- 79
161	3548	UA3548#1	SOD	ROM	49- 33
162	3548	UA3548#2	SOD	ROM	50- 11
163	3548	UA3548#3	SOD	ROM	53- 6
164	3548	UA3548#4	SOD	ROM	56- 78
165	3572	UA3572D	SOD	ROM	49- 75
166	3580	3580-9-6G	FSC	ROM	50- 9
167	3584	3584-9-6G	FSC	ROM	50- 12
168	3600	AY5-3600	GIC	CODE CONV	64- 95
169	3600	AY5-3600-PRO	GIC	CODE CONV	64- 97
170	3600	KR3600	SMC	CODE CONV	64- 96
171	3600	KR3600-PRO	SMC	CODE CONV	64- 98
172	3625	C3625A-1	ITL	ROM	53- 89
173	3628	D3628	ITL	ROM	55- 53
174	3628	D3628-4	ITL	ROM	55- 70
175	3628	D3628A	ITL	ROM	55- 35
176	3628	D3628A-1	ITL	ROM	55- 28
177	3636	D3636	ITL	ROM	58- 72
178	3636	D3636-1	ITL	ROM	58- 62
179	3636	MD3636	ITL	ROM	58- 79
180	3716	MSM3716-2AS	OKIJ	RAM	43- 98
181	3716	MSM3716-3AS	OKIJ	RAM	44- 31
182	3716	MSM3716-4AS	OKIJ	RAM	44- 66
183	3741	MSM3741-1A	OKIJ	RAM	39- 72
184	3741	MSM3741-2A	OKIJ	RAM	39- 75
185	3741	MSM3741A	OKIJ	RAM	39- 69
186	3750	MSM3750-6A	OKIJ	RAM	32- 90
187	3750	MSM3750-8A	OKIJ	RAM	32- 91
188	3758	MSM3758A	OKIJ	ROM	56- 46
189	3758	MSM3758AS	OKIJ	ROM	56- 40
190	3761	MSM3761AS	OKIJ	CHAR GEN	63- 62
191	3770	MSM3770A	OKIJ	ROM	54-109
192	3780	MSM3780	OKIJ	ROM	57- 76
193	3781	MSM3781AS	OKIJ	ROM	58- 20
194	3800	3800-4-6H	FSC	SHIFT REG	77- 23
195	3800	3800-9-6H	FSC	SHIFT REG	77- 24
196	3801	3801-4-6H	FSC	SHIFT REG	83- 45
197	3801	3801-9-6H	FSC	SHIFT REG	83- 46
198	3802	HEPC3802P-RT	MOTA	CHAR GEN	63- 43
199	4004	MC4004F	MOTA	RAM	19- 15
200	4004	MC4004L	MOTA	RAM	19- 16
201	4004	MC4004P	MOTA	RAM	19- 17
202	4005	MC4005F	MOTA	RAM	19- 18
203	4005	MC4005L	MOTA	RAM	19- 19
204	4005	MC4005P	MOTA	RAM	19- 20
205	4006	CD4006AD	RCA	SHIFT REG	75- 39
206	4006	CD4006AE	RCA	SHIFT REG	75- 36
207	4006	CD4006AF	RCA	SHIFT REG	75- 40
208	4006	CD4006AH	RCA	SHIFT REG	75- 41
209	4006	CD4006AY#	RCA	SHIFT REG	75- 42
210	4006	CD4006BD	RCA	SHIFT REG	75- 52
211	4006	CD4006BE	RCA	SHIFT REG	75- 53
212	4006	CD4006BF	RCA	SHIFT REG	75- 54
213	4006	CD4006BH	RCA	SHIFT REG	75- 55
214	4006	4006BDC	FSC	SHIFT REG	75- 61
215	4006	4006BDM	FSC	SHIFT REG	75- 62
216	4006	4006BFC	FSC	SHIFT REG	75- 63
217	4006	4006BFM	FSC	SHIFT REG	75- 64
218	4006	4006BPC	FSC	SHIFT REG	75- 65
219	4006	CM4006AD	SOD	SHIFT REG	75- 35
220	4006	CM4006AE	SOD	SHIFT REG	75- 34

SYMBOLS AND CODES EXPLAINED IN INTERPRETER

GENERIC PRODUCT INDEX

IN ORDER OF: (1)GENERIC NO. (2)MFR TYPE NO.

LINE No.	[1] GENERIC NO.	[2] MANUFACTURER TYPE NO.	MFR. CODE	PRODUCT CLASS	PAGE & LINE
1	4006	CM4006AF	SOD	SHIFT REG	75- 43
2	4006	SCL4006ABC	SSS	SHIFT REG	75- 47
3	4006	SCL4006BC	SSS	SHIFT REG	65- 5
4	4006	SCL4006BD	SSS	SHIFT REG	65- 6
5	4006	SCL4006BE	SSS	SHIFT REG	65- 7
6	4006	SCL4006BF	SSS	SHIFT REG	65- 8
7	4006	HBC4006AD	SGAI	SHIFT REG	75- 44
8	4006	HBC4006AF	SGAI	SHIFT REG	75- 45
9	4006	HBC4006AK	SGAI	SHIFT REG	75- 46
10	4006	HBF4006AE	SGAI	SHIFT REG	75- 37
11	4006	HBF4006AF	SGAI	SHIFT REG	75- 38
12	4006	HCC4006BD	SGAI	SHIFT REG	75- 56
13	4006	HCC4006BF	SGAI	SHIFT REG	75- 57
14	4006	HCC4006BK	SGAI	SHIFT REG	75- 58
15	4006	HCF4006BE	SGAI	SHIFT REG	75- 59
16	4006	HCF4006BF	SGAI	SHIFT REG	75- 60
17	4006	HEF4006B	VALG	SHIFT REG	75- 51
18	4006	HEF4006BD	MULB	SHIFT REG	75- 66
19	4006	HEF4006BD	PHIN	SHIFT REG	75- 66
20	4006	HEF4006BP	MULB	SHIFT REG	75- 67
21	4006	HEF4006BP	PHIN	SHIFT REG	75- 67
22	4006	HEF4006BT	PHIN	SHIFT REG	75- 68
23	4006	HEF4006P	PHIN	SHIFT REG	75- 69
24	4006	HEF4006P	SIC	SHIFT REG	75- 69
25	4006	HEF4006P	VALG	SHIFT REG	75- 69
26	4008	TMS4008NLO	TII	RAM	37- 80
27	4008	TMS4008NL1	TII	RAM	37- 81
28	4012	MC4012L	MOTA	SHIFT REG	71-107
29	4012	MC4012P	MOTA	SHIFT REG	71-108
30	4014	HEF4014BP	PHIN	SHIFT REG	80- 46
31	4014	HEF4014BT	PHIN	SHIFT REG	80- 47
32	4014	HEF4014P	VALG	SHIFT REG	80- 32
33	4014	TF4014AJ	TII	SHIFT REG	79- 70
34	4014	TF4014AN	TII	SHIFT REG	79- 71
35	4014	CD4014AD	RCA	SHIFT REG	79- 83
36	4014	CD4014AE	RCA	SHIFT REG	79- 74
37	4014	CD4014AF	RCA	SHIFT REG	79- 84
38	4014	CD4014AH	RCA	SHIFT REG	79- 85
39	4014	CD4014AK	RCA	SHIFT REG	79- 86
40	4014	CD4014AY	RCA	SHIFT REG	79- 75
41	4014	CD4014BD	RCA	SHIFT REG	80- 33
42	4014	CD4014BE	RCA	SHIFT REG	80- 34
43	4014	CD4014BF	RCA	SHIFT REG	80- 35
44	4014	CD4014BH	RCA	SHIFT REG	77- 72
45	4014	TP4014AJ	TII	SHIFT REG	79- 66
46	4014	TP4014AN	TII	SHIFT REG	79- 67
47	4014	4014BDC	FSC	SHIFT REG	80- 19
48	4014	4014BDM	FSC	SHIFT REG	80- 20
49	4014	4014BFC	FSC	SHIFT REG	80- 21
50	4014	4014BFM	FSC	SHIFT REG	80- 22
51	4014	4014BPC	FSC	SHIFT REG	80- 23
52	4014	CM4014AD	SOD	SHIFT REG	76- 94
53	4014	CM4014AE	SOD	SHIFT REG	79- 65
54	4014	CM4014AF	SOD	SHIFT REG	79- 91
55	4014	uPD4014C	NECJ	SHIFT REG	80- 88
56	4014	SCL4014BC	SSS	SHIFT REG	80- 3
57	4014	SCL4014BD	SSS	SHIFT REG	80- 4
58	4014	SCL4014BE	SSS	SHIFT REG	80- 5
59	4014	SCL4014BF	SSS	SHIFT REG	79- 82
60	4014	SCL4014BHN	SSS	SHIFT REG	80- 6
61	4014	HBC4014AD	SGAI	SHIFT REG	79- 93
62	4014	HBC4014AF	SGAI	SHIFT REG	79- 94
63	4014	HBC4014AK	SGAI	SHIFT REG	79- 95
64	4014	HBF4014AE	SGAI	SHIFT REG	79- 78
65	4014	HBF4014AF	SGAI	SHIFT REG	79- 79
66	4014	HCC4014BD	SGAI	SHIFT REG	80- 40
67	4014	HCC4014BF	SGAI	SHIFT REG	80- 41
68	4014	HCC4014BK	SGAI	SHIFT REG	80- 42
69	4014	HCF4014BE	SGAI	SHIFT REG	80- 43
70	4014	HCF4014BF	SGAI	SHIFT REG	80- 44
71	4014	HEF4014B	VALG	SHIFT REG	79- 46
72	4014	HEF4014BD	MULB	SHIFT REG	80- 45
73	4014	HEF4014BD	PHIN	SHIFT REG	80- 45
74	4014	HEF4014BP	MULB	SHIFT REG	80- 46
75	4015	HEF4015B	VALG	SHIFT REG	73- 79
76	4015	HEF4015BD	MULB	SHIFT REG	74- 33
77	4015	HEF4015BD	PHIN	SHIFT REG	74- 33
78	4015	HEF4015BP	MULB	SHIFT REG	74- 34
79	4015	HEF4015BP	PHIN	SHIFT REG	74- 34
80	4015	HEF4015BT	PHIN	SHIFT REG	74- 35
81	4015	HEF4015P	VALG	SHIFT REG	74- 23
82	4015	SS4015AE	SST	SHIFT REG	73- 95
83	4015	TF4015AJ	TII	SHIFT REG	73- 93
84	4015	TF4015AN	TII	SHIFT REG	73- 94
85	4015	CD4015AD	RCA	SHIFT REG	74- 3
86	4015	CD4015AE	RCA	SHIFT REG	73- 96
87	4015	CD4015AF	RCA	SHIFT REG	74- 4
88	4015	CD4015AH	RCA	SHIFT REG	74- 5
89	4015	CD4015AK	RCA	SHIFT REG	74- 6
90	4015	CD4015AY	RCA	SHIFT REG	73- 97
91	4015	CD4015BD	RCA	SHIFT REG	74- 24
92	4015	CD4015BE	RCA	SHIFT REG	74- 25
93	4015	CD4015BF	RCA	SHIFT REG	74- 26
94	4015	CD4015BH	RCA	SHIFT REG	74- 27
95	4015	TP4015AJ	TII	SHIFT REG	73- 90
96	4015	TP4015AN	TII	SHIFT REG	73- 91
97	4015	4015BDC	FSC	SHIFT REG	74- 17
98	4015	4015BDM	FSC	SHIFT REG	74- 18
99	4015	4015BFC	FSC	SHIFT REG	74- 19
100	4015	4015BFM	FSC	SHIFT REG	74- 20
101	4015	4015BPC	FSC	SHIFT REG	74- 21
102	4015	CM4015AD	SOD	SHIFT REG	73- 92
103	4015	CM4015AE	SOD	SHIFT REG	73- 89
104	4015	CM4015AF	SOD	SHIFT REG	74- 7
105	4015	uPD4015C	NECJ	SHIFT REG	74- 16
106	4015	SCL4015BC	SSS	SHIFT REG	73-100
107	4015	SCL4015BD	SSS	SHIFT REG	73-101
108	4015	SCL4015BE	SSS	SHIFT REG	73-102
109	4015	SCL4015BF	SSS	SHIFT REG	74- 1
110	4015	SCL4015BHN	SSS	SHIFT REG	74- 2
111	4015	HBC4015AD	SGAI	SHIFT REG	74- 8
112	4015	HBC4015AF	SGAI	SHIFT REG	74- 9
113	4015	HBC4015AK	SGAI	SHIFT REG	74- 10
114	4015	HBF4015AE	SGAI	SHIFT REG	73- 98
115	4015	HBF4015AF	SGAI	SHIFT REG	73- 99
116	4015	HCC4015BD	SGAI	SHIFT REG	74- 28
117	4015	HCC4015BF	SGAI	SHIFT REG	74- 29
118	4015	HCC4015BK	SGAI	SHIFT REG	74- 30
119	4015	HCF4015BE	SGAI	SHIFT REG	74- 31
120	4015	HCF4015BF	SGAI	SHIFT REG	74- 32
121	4016	TMS4016NL	TII	RAM	38- 18
122	4021	HEF4021B	VALG	SHIFT REG	79- 47
123	4021	HEF4021BD	MULB	SHIFT REG	80- 53
124	4021	HEF4021BD	PHIN	SHIFT REG	80- 53
125	4021	HEF4021BP	MULB	SHIFT REG	80- 54
126	4021	HEF4021BP	PHIN	SHIFT REG	80- 54
127	4021	HEF4021BT	PHIN	SHIFT REG	80- 55
128	4021	HEF4021P	VALG	SHIFT REG	80- 56
129	4021	TF4021AJ	TII	SHIFT REG	79- 72
130	4021	TF4021AN	TII	SHIFT REG	79- 73
131	4021	CD4021AD	RCA	SHIFT REG	79- 87
132	4021	CD4021AE	RCA	SHIFT REG	79- 76
133	4021	CD4021AF	RCA	SHIFT REG	79- 88
134	4021	CD4021AH	RCA	SHIFT REG	79- 89
135	4021	CD4021AK	RCA	SHIFT REG	79- 90
136	4021	CD4021AY	RCA	SHIFT REG	79- 77
137	4021	CD4021BD	RCA	SHIFT REG	80- 36
138	4021	CD4021BE	RCA	SHIFT REG	80- 37
139	4021	CD4021BF	RCA	SHIFT REG	80- 38
140	4021	CD4021BH	RCA	SHIFT REG	80- 39
141	4021	TP4021AJ	TII	SHIFT REG	79- 68
142	4021	TP4021AN	TII	SHIFT REG	79- 69
143	4021	4021BDC	FSC	SHIFT REG	80- 68
144	4021	4021BDM	FSC	SHIFT REG	80- 69
145	4021	4021BFC	FSC	SHIFT REG	80- 70
146	4021	4021BFM	FSC	SHIFT REG	80- 71
147	4021	4021BPC	FSC	SHIFT REG	80- 72
148	4021	CM4021AD	SOD	SHIFT REG	82- 15
149	4021	CM4021AE	SOD	SHIFT REG	82- 14
150	4021	CM4021AF	SOD	SHIFT REG	79- 92
151	4021	uPD4021C	NECJ	SHIFT REG	80- 89
152	4021	SCL4021AD	SSS	SHIFT REG	80- 13
153	4021	SCL4021BC	SSS	SHIFT REG	80- 14
154	4021	SCL4021BD	SSS	SHIFT REG	80- 15
155	4021	SCL4021BE	SSS	SHIFT REG	80- 16
156	4021	SCL4021BF	SSS	SHIFT REG	80- 17
157	4021	SCL4021BHN	SSS	SHIFT REG	80- 18
158	4021	HBC4021AD	SGAI	SHIFT REG	79- 96
159	4021	HBC4021AF	SGAI	SHIFT REG	79- 97
160	4021	HBC4021AK	SGAI	SHIFT REG	79- 98
161	4021	HBF4021AE	SGAI	SHIFT REG	79- 80
162	4021	HBF4021AF	SGAI	SHIFT REG	79- 81
163	4021	HCC4021BD	SGAI	SHIFT REG	79- 48
164	4021	HCC4021BF	SGAI	SHIFT REG	79- 49
165	4021	HCC4021BK	SGAI	SHIFT REG	79- 50
166	4021	HCF4021BE	SGAI	SHIFT REG	79- 51
167	4021	HCF4021BF	SGAI	SHIFT REG	79- 52
168	4027	MK4027J-1	MOS	RAM	38- 57
169	4027	MK4027J-2	MOS	RAM	38- 77
170	4027	MK4027J-3	MOS	RAM	38-106
171	4027	MK4027N-1	MOS	RAM	38- 58
172	4027	MK4027N-2	MOS	RAM	38- 78
173	4027	MK4027N-3	MOS	RAM	38-107
174	4027	MK4027N-4	MOS	RAM	39- 29
175	4027	MK4027P-1	MOS	RAM	38- 59
176	4027	MK4027P-2	MOS	RAM	38- 79
177	4027	MK4027P-3	MOS	RAM	38-108
178	4027	MKB4027F-84	MOS	RAM	39- 30
179	4027	MKB4027J-83	MOS	RAM	38-109
180	4027	MKB4027J-84	MOS	RAM	39- 31
181	4027	ITT4027-2D	ITTG	RAM	38- 67
182	4027	ITT4027-2N	ITTG	RAM	38- 68
183	4027	ITT4027-3D	ITTG	RAM	38- 95
184	4027	ITT4027-3N	ITTG	RAM	38- 96
185	4027	ITT4027-4D	ITTG	RAM	39- 16
186	4027	ITT4027-4N	ITTG	RAM	39- 17
187	4027	ITT4027-6D	ITTG	RAM	39- 52
188	4027	ITT4027-6N	ITTG	RAM	39- 53
189	4027	4027-2F	MULB	RAM	38- 60
190	4027	4027-2F	PHIN	RAM	38- 60
191	4027	4027-2F	SIC	RAM	38- 60
192	4027	4027-2I	MULB	RAM	38- 61
193	4027	4027-2I	PHIN	RAM	38- 61
194	4027	4027-2I	SIC	RAM	38- 61
195	4027	4027-2N	MULB	RAM	38- 62
196	4027	4027-2N	PHIN	RAM	38- 62
197	4027	4027-2N	SIC	RAM	38- 62
198	4027	4027-3F	MULB	RAM	38- 82
199	4027	4027-3F	PHIN	RAM	38- 82
200	4027	4027-3F	SIC	RAM	38- 82
201	4027	4027-3I	MULB	RAM	38- 83
202	4027	4027-3I	PHIN	RAM	38- 83
203	4027	4027-3I	SIC	RAM	38- 83
204	4027	4027-3N	MULB	RAM	38- 84
205	4027	4027-3N	PHIN	RAM	38- 84
206	4027	4027-3N	SIC	RAM	38- 84
207	4027	4027-4F	MULB	RAM	39- 4
208	4027	4027-4F	PHIN	RAM	39- 4
209	4027	4027-4F	SIC	RAM	39- 4
210	4027	4027-4I	MULB	RAM	39- 5
211	4027	4027-4I	PHIN	RAM	39- 5
212	4027	4027-4I	SIC	RAM	39- 5
213	4027	4027-4N	MULB	RAM	39- 6
214	4027	4027-4N	PHIN	RAM	39- 6
215	4027	4027-4N	SIC	RAM	39- 6
216	4027	M4027P-2B1	SGAI	RAM	38- 69
217	4027	M4027P-2D1	SGAI	RAM	38- 70
218	4027	M4027P-2F1	SGAI	RAM	38- 71
219	4027	M4027P-3B1	SGAI	RAM	38- 97
220	4027	M4027P-3D1	SGAI	RAM	38- 98

SYMBOLS AND CODES EXPLAINED IN INTERPRETER

GENERIC PRODUCT INDEX

IN ORDER OF: (1)GENERIC NO. (2)MFR TYPE NO.

LINE No.	1 GENERIC NO.	2 MANUFACTURER TYPE NO.	MFR. CODE	PRODUCT CLASS	PAGE & LINE
1	4027	M4027P-3F1	SGAI	RAM	38- 99
2	4027	M4027P-4B1	SGAI	RAM	39- 18
3	4027	M4027P-4D1	SGAI	RAM	39- 19
4	4027	M4027P-4F1	SGAI	RAM	39- 20
5	4027	MCM4027AC1	MOTA	RAM	38- 56
6	4027	MCM4027AC2	MOTA	RAM	38- 72
7	4027	MCM4027AC3	MOTA	RAM	38-100
8	4027	MCM4027AC4	MOTA	RAM	39- 21
9	4027	MCM4027C2	MOTA	RAM	38- 73
10	4027	MCM4027C3	MOTA	RAM	38-101
11	4027	MCM4027C4	MOTA	RAM	39- 22
12	4027	MCM4027L2	MOTA	RAM	38- 74
13	4027	MCM4027L3	MOTA	RAM	38-102
14	4027	MCM4027L4	MOTA	RAM	39- 23
15	4027	MCM4027P3	MOTA	RAM	38-103
16	4027	MCM4027P4	MOTA	RAM	39- 24
17	4031	HEF4031B	VALG	SHIFT REG	84- 27
18	4031	HEF4031BD	MULB	SHIFT REG	84- 60
19	4031	HEF4031BD	PHIN	SHIFT REG	84- 60
20	4031	HEF4031BP	MULB	SHIFT REG	84- 61
21	4031	HEF4031BP	PHIN	SHIFT REG	84- 61
22	4031	HEF4031BT	PHIN	SHIFT REG	84- 62
23	4031	HEF4031P	VALG	SHIFT REG	84- 45
24	4031	CD4031AD	RCA	SHIFT REG	84- 34
25	4031	CD4031AE	RCA	SHIFT REG	84- 30
26	4031	CD4031AF	RCA	SHIFT REG	84- 35
27	4031	CD4031AH	RCA	SHIFT REG	84- 36
28	4031	CD4031AK	RCA	SHIFT REG	84- 37
29	4031	CD4031AY	RCA	SHIFT REG	84- 31
30	4031	CD4031BD	RCA	SHIFT REG	84- 51
31	4031	CD4031BE	RCA	SHIFT REG	84- 52
32	4031	CD4031BF	RCA	SHIFT REG	84- 53
33	4031	CD4031BH	RCA	SHIFT REG	84- 54
34	4031	4031BDC	FSC	SHIFT REG	84- 46
35	4031	4031BDM	FSC	SHIFT REG	84- 47
36	4031	4031BFC	FSC	SHIFT REG	84- 48
37	4031	4031BFM	FSC	SHIFT REG	84- 49
38	4031	4031BPC	FSC	SHIFT REG	84- 50
39	4031	HBC4031AD	SGAI	SHIFT REG	84- 38
40	4031	HBC4031AF	SGAI	SHIFT REG	84- 39
41	4031	HBC4031AK	SGAI	SHIFT REG	84- 40
42	4031	HBF4031AE	SGAI	SHIFT REG	84- 32
43	4031	HBF4031AF	SGAI	SHIFT REG	84- 33
44	4031	HCC4031BD	SGAI	SHIFT REG	84- 55
45	4031	HCC4031BF	SGAI	SHIFT REG	84- 56
46	4031	HCC4031BK	SGAI	SHIFT REG	84- 57
47	4031	HCF4031BE	SGAI	SHIFT REG	84- 58
48	4031	HCF4031BF	SGAI	SHIFT REG	84- 59
49	4034	CD4034AD	RCA	SHIFT REG	77- 29
50	4034	CD4034AE	RCA	SHIFT REG	77- 30
51	4034	CD4034AH	RCA	SHIFT REG	77- 31
52	4034	CD4034AK#	RCA	SHIFT REG	77- 32
53	4034	CD4034BD	RCA	SHIFT REG	77- 50
54	4034	CD4034BE	RCA	SHIFT REG	77- 51
55	4034	CD4034BF	RCA	SHIFT REG	77- 52
56	4034	CD4034BH	RCA	SHIFT REG	77- 53
57	4034	4034BDC	FSC	SHIFT REG	77- 54
58	4034	4034BDM	FSC	SHIFT REG	77- 55
59	4034	4034BFC	FSC	SHIFT REG	77- 56
60	4034	4034BFM	FSC	SHIFT REG	77- 57
61	4034	4034BPC	FSC	SHIFT REG	77- 58
62	4034	SCL4034AH	SSS	SHIFT REG	77- 46
63	4034	SCL4034BC	SSS	SHIFT REG	77- 25
64	4034	SCL4034BD	SSS	SHIFT REG	77- 26
65	4034	SCL4034BE	SSS	SHIFT REG	77- 27
66	4034	SCL4034BH	SSS	SHIFT REG	77- 28
67	4034	SCL4034D	SSS	SHIFT REG	77- 47
68	4034	HBC4034AD	SGAI	SHIFT REG	80- 1
69	4034	HBC4034AK	SGAI	SHIFT REG	80- 2
70	4034	HBF4034AD	SGAI	SHIFT REG	77- 33
71	4034	HBF4034AE	SGAI	SHIFT REG	77- 34
72	4034	HCC4034BD	SGAI	SHIFT REG	77- 20
73	4034	HCF4034BD	SGAI	SHIFT REG	77- 21
74	4034	HCF4034BE	SGAI	SHIFT REG	77- 22
75	4035	HEF4035B	VALG	SHIFT REG	65- 87
76	4035	HEF4035BD	MULB	SHIFT REG	68- 15
77	4035	HEF4035BD	PHIN	SHIFT REG	68- 15
78	4035	HEF4035BP	MULB	SHIFT REG	68- 16
79	4035	HEF4035BP	PHIN	SHIFT REG	68- 16
80	4035	HEF4035BT	PHIN	SHIFT REG	68- 17
81	4035	HEF4035P	VALG	SHIFT REG	66-100
82	4035	CD4035AD	RCA	SHIFT REG	66- 35
83	4035	CD4035AE	RCA	SHIFT REG	66- 36
84	4035	CD4035AF	RCA	SHIFT REG	66- 37
85	4035	CD4035AH	RCA	SHIFT REG	66- 38
86	4035	CD4035AK	RCA	SHIFT REG	66- 39
87	4035	CD4035AY	RCA	SHIFT REG	66- 40
88	4035	CD4035BD	RCA	SHIFT REG	67- 74
89	4035	CD4035BE	RCA	SHIFT REG	67- 75
90	4035	CD4035BF	RCA	SHIFT REG	67- 76
91	4035	CD4035BH	RCA	SHIFT REG	67- 77
92	4035	4035BDC	FSC	SHIFT REG	66- 85
93	4035	4035BDM	FSC	SHIFT REG	66- 86
94	4035	4035BFC	FSC	SHIFT REG	66- 87
95	4035	4035BFM	FSC	SHIFT REG	66- 88
96	4035	4035BPC	FSC	SHIFT REG	66- 89
97	4035	CM4035AD	SOD	SHIFT REG	66- 20
98	4035	CM4035AE	SOD	SHIFT REG	65- 97
99	4035	CM4035AF	SOD	SHIFT REG	66- 21
100	4035	uPD4035C	NECJ	SHIFT REG	66- 44
101	4035	SCL4035ABC	SSS	SHIFT REG	77- 48
102	4035	SCL4035ABD	SSS	SHIFT REG	66- 41
103	4035	SCL4035ABE	SSS	SHIFT REG	77- 49
104	4035	SCL4035ABF	SSS	SHIFT REG	66- 42
105	4035	SCL4035ABHN	SSS	SHIFT REG	66- 43
106	4035	SCL4035BC	SSS	SHIFT REG	66- 29
107	4035	SCL4035BD	SSS	SHIFT REG	66- 30
108	4035	SCL4035BE	SSS	SHIFT REG	66- 31
109	4035	SCL4035BF	SSS	SHIFT REG	66- 32
110	4035	SCL4035BHN	SSS	SHIFT REG	66- 33
111	4035	HBC4035AD	SGAI	SHIFT REG	66- 22
112	4035	HBC4035AF	SGAI	SHIFT REG	66- 23
113	4035	HBC4035AK	SGAI	SHIFT REG	66- 24
114	4035	HBF4035AE	SGAI	SHIFT REG	65-102
115	4035	HBF4035AF	SGAI	SHIFT REG	65-103
116	4035	HCC4035BD	SGAI	SHIFT REG	67- 78
117	4035	HCC4035BF	SGAI	SHIFT REG	67- 79
118	4035	HCC4035BK	SGAI	SHIFT REG	67- 80
119	4035	HCF4035BE	SGAI	SHIFT REG	67- 81
120	4035	HCF4035BF	SGAI	SHIFT REG	67- 82
121	4036	TMS4036NL	TII	RAM	21- 55
122	4036	CD4036AD	RCA	RAM	18- 91
123	4036	HBC4036AD	SGAI	RAM	18- 84
124	4036	HBC4036AK	SGAI	RAM	18- 94
125	4036	HBF4036AD	SGAI	RAM	18- 87
126	4036	HBF4036AE	SGAI	RAM	18- 88
127	4039	CD4039AD	RCA	RAM	18- 92
128	4039	CD4039AK	RCA	RAM	18- 93
129	4039	MC4039P	MOTA	CHAR GEN	63- 44
130	4039	HBC4039AD	SGAI	RAM	18- 85
131	4039	HBC4039AK	SGAI	RAM	18- 86
132	4039	HBF4039AD	SGAI	RAM	18- 89
133	4039	HBF4039AE	SGAI	RAM	18- 90
134	4042	CM4042AD	SOD	SHIFT REG	65- 80
135	4042	CM4042AE	SOD	SHIFT REG	65- 81
136	4042	SCL4042BC	SSS	SHIFT REG	65- 92
137	4042	SCL4042BD	SSS	SHIFT REG	65- 93
138	4042	SCL4042BE	SSS	SHIFT REG	65- 94
139	4042	SCL4042BF	SSS	SHIFT REG	65- 95
140	4042	SCL4042BHN	SSS	SHIFT REG	65- 96
141	4042	HBC4042AD	SGAI	SHIFT REG	65- 82
142	4042	HBC4042AF	SGAI	SHIFT REG	65- 83
143	4042	HBC4042AK	SGAI	SHIFT REG	65- 84
144	4042	HBF4042AE	SGAI	SHIFT REG	65- 85
145	4042	HBF4042AF	SGAI	SHIFT REG	65- 86
146	4044	TMS4044-15NL	TII	RAM	40-104
147	4044	TMS4044-20NL	TII	RAM	41- 24
148	4044	TMS4044-25NL	TII	RAM	41- 47
149	4044	TMS4044-45NL	TII	RAM	41-100
150	4055	MM4055D	AMD	SHIFT REG	85- 38
151	4056	MM4056H	AMD	SHIFT REG	85- 74
152	4057	MM4057D	AMD	SHIFT REG	85- 86
153	4061	CD4061AD	RCA	RAM	23- 80
154	4062	CD4062AH	RCA	SHIFT REG	85- 46
155	4062	CD4062AK	RCA	SHIFT REG	85- 47
156	4062	CD4062AT	RCA	SHIFT REG	85- 48
157	4062	HBC4062AK	SGAI	SHIFT REG	85- 49
158	4062	HBF4062AE	SGAI	SHIFT REG	85- 50
159	4064	MCM4064L	MOTA	RAM	20- 69
160	4076	HEF4076B	VALG	SHIFT REG	66-101
161	4076	HEF4076BD	MULB	SHIFT REG	67- 83
162	4076	HEF4076BD	PHIN	SHIFT REG	67- 83
163	4076	HEF4076BP	MULB	SHIFT REG	67- 84
164	4076	HEF4076BP	PHIN	SHIFT REG	67- 84
165	4076	HEF4076BT	PHIN	SHIFT REG	67- 85
166	4076	HEF4076P	VALG	SHIFT REG	65- 88
167	4076	CD4076BD	RCA	SHIFT REG	66- 60
168	4076	CD4076BE	RCA	SHIFT REG	66- 61
169	4076	CD4076BF	RCA	SHIFT REG	66- 62
170	4076	CD4076BH	RCA	SHIFT REG	66- 63
171	4076	4076BDC	FSC	SHIFT REG	68- 18
172	4076	4076BDM	FSC	SHIFT REG	68- 19
173	4076	4076BFC	FSC	SHIFT REG	68- 20
174	4076	4076BFM	FSC	SHIFT REG	68- 21
175	4076	4076BPC	FSC	SHIFT REG	68- 22
176	4076	SCL4076BC	SSS	SHIFT REG	66- 55
177	4076	SCL4076BD	SSS	SHIFT REG	66- 56
178	4076	SCL4076BE	SSS	SHIFT REG	66- 57
179	4076	SCL4076BF	SSS	SHIFT REG	66- 58
180	4076	SCL4076BHN	SSS	SHIFT REG	66- 59
181	4076	HCC4076BD	SGAI	SHIFT REG	66- 64
182	4076	HCC4076BF	SGAI	SHIFT REG	66- 65
183	4076	HCC4076BK	SGAI	SHIFT REG	66- 66
184	4076	HCF4076BE	SGAI	SHIFT REG	66- 67
185	4076	HCF4076BF	SGAI	SHIFT REG	66- 68
186	4094	HEF4094BD	MULB	SHIFT REG	81- 22
187	4094	HEF4094BD	PHIN	SHIFT REG	81- 22
188	4094	HEF4094BP	MULB	SHIFT REG	81- 23
189	4094	HEF4094BP	PHIN	SHIFT REG	81- 23
190	4094	HEF4094BT	PHIN	SHIFT REG	81- 24
191	4094	CD4094BD	RCA	SHIFT REG	81- 11
192	4094	CD4094BE	RCA	SHIFT REG	81- 12
193	4094	CD4094BF	RCA	SHIFT REG	81- 13
194	4094	CD4094BH	RCA	SHIFT REG	81- 14
195	4094	CD4094BK	RCA	SHIFT REG	81- 10
196	4094	SCL4094BC	SSS	SHIFT REG	81- 4
197	4094	SCL4094BD	SSS	SHIFT REG	83- 7
198	4094	SCL4094BE	SSS	SHIFT REG	81- 5
199	4094	SCL4094BF	SSS	SHIFT REG	83- 8
200	4094	SCL4094BHN	SSS	SHIFT REG	81- 6
201	4094	HCC4094BD	SGAI	SHIFT REG	81- 15
202	4094	HCC4094BF	SGAI	SHIFT REG	81- 16
203	4094	HCC4094BK	SGAI	SHIFT REG	81- 17
204	4094	HCF4094BE	SGAI	SHIFT REG	81- 18
205	4094	HCF4094BF	SGAI	SHIFT REG	81- 19
206	4096	MCM4096C6	MOTA	RAM	39- 25
207	4096	MCM4096C11	MOTA	RAM	39- 54
208	4096	MCM4096C16	MOTA	RAM	39- 43
209	4096	MCM4096L6	MOTA	RAM	39- 26
210	4096	MCM4096L11	MOTA	RAM	39- 55
211	4096	MCM4096L16	MOTA	RAM	39- 44
212	4103	CG4103	SMC	CHAR GEN	62- 95
213	4104	MK4104J-3	MOS	RAM	41- 12
214	4104	MK4104J-4	MOS	RAM	41- 38
215	4104	MK4104J-5	MOS	RAM	41- 62
216	4104	MK4104J-6	MOS	RAM	41- 75
217	4104	MK4104J-33	MOS	RAM	41- 13
218	4104	MK4104J-34	MOS	RAM	41- 39
219	4104	MK4104J-35	MOS	RAM	41- 63
220	4104	MK4104N-3	MOS	RAM	41- 14

SYMBOLS AND CODES EXPLAINED IN INTERPRETER

GENERIC PRODUCT INDEX

IN ORDER OF: (1)GENERIC NO. (2)MFR TYPE NO.

LINE No.	[1] GENERIC NO.	[2] MANUFACTURER TYPE NO.	MFR. CODE	PRODUCT CLASS	PAGE & LINE
1	4104	MK4104N-4	MOS	RAM	41- 40
2	4104	MK4104N-5	MOS	RAM	41- 64
3	4104	MK4104N-6	MOS	RAM	41- 76
4	4104	MK4104N-33	MOS	RAM	41- 15
5	4104	MK4104N-34	MOS	RAM	41- 41
6	4104	MK4104N-35	MOS	RAM	41- 65
7	4104	MK4104P-3	MOS	RAM	41- 16
8	4104	MK4104P-4	MOS	RAM	41- 42
9	4104	MK4104P-5	MOS	RAM	41- 66
10	4104	MK4104P-6	MOS	RAM	41- 77
11	4104	MK4104P-33	MOS	RAM	41- 17
12	4104	MK4104P-34	MOS	RAM	41- 43
13	4104	MK4104P-35	MOS	RAM	41- 67
14	4104	MKB4104E-85	MOS	RAM	41- 68
15	4104	MKB4104E-86	MOS	RAM	41- 78
16	4104	MKB4104J-85	MOS	RAM	41- 69
17	4104	MKB4104J-86	MOS	RAM	41- 79
18	4104	MKB4104P-85	MOS	RAM	41- 70
19	4104	MKB4104P-86	MOS	RAM	41- 80
20	4104	4104UMC	EMM	RAM	36- 51
21	4104	4104USC	EMM	RAM	36- 39
22	4104	M4104UMC	EMM	RAM	36- 52
23	4104	M4104USC	EMM	RAM	36- 50
24	4104	uPD4104C	NECJ	RAM	42- 76
25	4104	uPD4104C	NECM	RAM	42- 76
26	4104	uPD4104C-1	NECJ	RAM	42- 52
27	4104	uPD4104C-1	NECM	RAM	42- 52
28	4104	uPD4104C-1#	NECM	RAM	42- 53
29	4104	uPD4104C-2	NECJ	RAM	42- 32
30	4104	uPD4104C-2	NECM	RAM	42- 32
31	4104	uPD4104C-2#	NECM	RAM	42- 33
32	4104	uPD4104C-3	NECM	RAM	40-105
33	4104	uPD4104C-30	NECM	RAM	41-105
34	4104	uPD4104C-33	NECM	RAM	41-106
35	4104	uPD4104C-36	NECM	RAM	41-107
36	4104	uPD4104C#	NECM	RAM	42- 77
37	4104	uPD4104D	NECJ	RAM	42- 78
38	4104	uPD4104D	NECM	RAM	42- 78
39	4104	uPD4104D-1	NECJ	RAM	42- 54
40	4104	uPD4104D-1	NECM	RAM	42- 54
41	4104	uPD4104D-1#	NECM	RAM	42- 55
42	4104	uPD4104D-2	NECJ	RAM	42- 34
43	4104	uPD4104D-2	NECM	RAM	42- 34
44	4104	uPD4104D-2#	NECM	RAM	42- 35
45	4104	uPD4104D-3	NECM	RAM	40-106
46	4104	uPD4104D-30	NECM	RAM	41-108
47	4104	uPD4104D-33	NECM	RAM	41-109
48	4104	uPD4104D-35	NECM	RAM	41-110
49	4104	uPD4104D-36	NECM	RAM	42- 1
50	4108	TMS4108-15NL	TII	RAM	43- 25
51	4108	TMS4108-20NL	TII	RAM	43- 26
52	4108	TMS4108-25NL	TII	RAM	43- 27
53	4116	MK4116E-2	MOS	RAM	43- 89
54	4116	MK4116E-3	MOS	RAM	44- 13
55	4116	MK4116N-2	MOS	RAM	43- 90
56	4116	MK4116N-3	MOS	RAM	44- 14
57	4116	MK4116N-4	MOS	RAM	44- 54
58	4116	MK4116P-2	MOS	RAM	43- 91
59	4116	MK4116P-3	MOS	RAM	44- 15
60	4116	MK4116P-4	MOS	RAM	44- 55
61	4116	MKB4116E-84	MOS	RAM	44- 56
62	4116	MKB4116E-93	MOS	RAM	44- 18
63	4116	MKB4116F-84	MOS	RAM	44- 57
64	4116	MKB4116F-93	MOS	RAM	44- 19
65	4116	MKB4116J-83	MOS	RAM	44- 20
66	4116	MKB4116J-84	MOS	RAM	44- 58
67	4116	MKB4116J-93	MOS	RAM	44- 21
68	4116	MKB4116P-83	MOS	RAM	44- 22
69	4116	MKB4116P-84	MOS	RAM	44- 59
70	4116	MKB4116P-93	MOS	RAM	44- 23
71	4116	HYB4116-A3	SIEG	RAM	44- 1
72	4116	HYB4116-A4	SIEG	RAM	44- 44
73	4116	HYB4116-P3	SIEG	RAM	44- 2
74	4116	HYB4116-P4	SIEG	RAM	44- 45
75	4116	MN4116	MATJ	RAM	44- 30
76	4116	IM4116-2CDE	INL	RAM	21- 87
77	4116	IM4116-2CJE	INL	RAM	21- 88
78	4116	IM4116-2CPE	INL	RAM	21- 89
79	4116	IM4116-3CDE	INL	RAM	21- 90
80	4116	IM4116-3CJE	INL	RAM	21- 91
81	4116	IM4116-3CPE	INL	RAM	21- 92
82	4116	IM4116-4CDE	INL	RAM	21- 93
83	4116	IM4116-4CJE	INL	RAM	21- 94
84	4116	IM4116-4CPE	INL	RAM	21- 95
85	4116	ITT4116-2D	ITTG	RAM	43- 75
86	4116	ITT4116-2N	ITTG	RAM	43- 76
87	4116	ITT4116-3D	ITTG	RAM	44- 3
88	4116	ITT4116-3N	ITTG	RAM	44- 4
89	4116	ITT4116-4D	ITTG	RAM	44- 46
90	4116	ITT4116-4N	ITTG	RAM	44- 47
91	4116	TMS4116-15JDL	TII	RAM	43-101
92	4116	TMS4116-15NL	TII	RAM	43-102
93	4116	TMS4116-20JDL	TII	RAM	44- 34
94	4116	TMS4116-20NL	TII	RAM	44- 35
95	4116	TMS4116-25JDL	TII	RAM	44- 69
96	4116	TMS4116-25NL	TII	RAM	44- 70
97	4116	M4116-2F1	SGAI	RAM	43- 79
98	4116	M4116-3F1	SGAI	RAM	44- 7
99	4116	M4116-4F1	SGAI	RAM	44- 49
100	4116	M4116P-2B1	SGAI	RAM	43- 80
101	4116	M4116P-2D1	SGAI	RAM	43- 81
102	4116	M4116P-2F1	SGAI	RAM	43- 82
103	4116	M4116P-3B1	SGAI	RAM	44- 8
104	4116	M4116P-3D1	SGAI	RAM	44- 9
105	4116	M4116P-3F1	SGAI	RAM	44- 10
106	4116	M4116P-4B1	SGAI	RAM	44- 50
107	4116	M4116P-4D1	SGAI	RAM	44- 51
108	4116	M4116P-4F1	SGAI	RAM	44- 52
109	4116	EF4116BC-15	THCF	RAM	44- 83
110	4116	EF4116BC-25	THCF	RAM	44-102
111	4116	EF4116BC-30	THCF	RAM	44-110
112	4116	EF4116BJ-15	THCF	RAM	44- 84
113	4116	EF4116BJ-20	THCF	RAM	44- 92
114	4116	EF4116BJ-30	THCF	RAM	45- 1
115	4116	MCM4116AC15	MOTA	RAM	44- 85
116	4116	MCM4116AC20	MOTA	RAM	44- 93
117	4116	MCM4116AC25	MOTA	RAM	44-103
118	4116	MCM4116AC30	MOTA	RAM	45- 2
119	4116	MCM4116AL15	MOTA	RAM	44- 86
120	4116	MCM4116AL20	MOTA	RAM	44- 94
121	4116	MCM4116AL25	MOTA	RAM	44-104
122	4116	MCM4116AL30	MOTA	RAM	45- 3
123	4116	MCM4116BC-20	MOTA	RAM	44- 95
124	4116	MCM4116BC-25	MOTA	RAM	45- 9
125	4116	MCM4116BC-30	MOTA	RAM	45- 4
126	4116	MCM4116BP-15	MOTA	RAM	44- 87
127	4116	MCM4116C15	MOTA	RAM	44- 88
128	4116	MCM4116C20	MOTA	RAM	44- 96
129	4116	MCM4116C25	MOTA	RAM	44-105
130	4116	MCM4116C30	MOTA	RAM	45- 5
131	4116	MCM4116L15	MOTA	RAM	44- 89
132	4116	MCM4116L20	MOTA	RAM	44- 97
133	4116	MCM4116L25	MOTA	RAM	44-106
134	4116	MCM4116L30	MOTA	RAM	45- 6
135	4117	MCM4117L15	MOTA	RAM	43- 85
136	4117	MCM4117L20	MOTA	RAM	44- 12
137	4117	MCM4117L25	MOTA	RAM	44- 53
138	4117	MCM4117L30	MOTA	RAM	44- 76
139	4118	MK4118AJ-1	MOS	RAM	27- 93
140	4118	MK4118AJ-2	MOS	RAM	27- 96
141	4118	MK4118AJ-3	MOS	RAM	27- 99
142	4118	MK4118AJ-4	MOS	RAM	27-102
143	4118	MK4118AN-1	MOS	RAM	27- 94
144	4118	MK4118AN-2	MOS	RAM	27- 97
145	4118	MK4118AN-3	MOS	RAM	27-100
146	4118	MK4118AN-4	MOS	RAM	27-103
147	4118	MK4118AP-1	MOS	RAM	27- 95
148	4118	MK4118AP-2	MOS	RAM	27- 98
149	4118	MK4118AP-3	MOS	RAM	27-101
150	4118	MK4118AP-4	MOS	RAM	27-104
151	4118	MKB4118J-82	MOS	RAM	37- 64
152	4118	MKB4118J-83	MOS	RAM	37- 67
153	4118	MKB4118P-82	MOS	RAM	37- 65
154	4118	MKB4118P-83	MOS	RAM	37- 68
155	4132	TMS4132-15JDL	TII	RAM	45- 17
156	4132	TMS4132-20JDL	TII	RAM	45- 22
157	4132	TMS4132-25JDL	TII	RAM	45- 23
158	4147	MK4147J-55	MOS	RAM	38- 19
159	4147	MK4147J-70	MOS	RAM	40- 71
160	4147	MK4147J-85	MOS	RAM	40- 84
161	4147	MK4147N-55	MOS	RAM	40- 58
162	4147	MK4147N-70	MOS	RAM	40- 72
163	4147	MK4147N-85	MOS	RAM	40- 85
164	4164	MK4164E-12	MOS	RAM	45- 24
165	4164	MK4164E-15	MOS	RAM	45- 25
166	4164	MK4164J-12	MOS	RAM	45- 27
167	4164	MK4164N-12	MOS	RAM	45- 28
168	4164	MK4164N-15	MOS	RAM	45- 26
169	4164	NMC4164J-1	NSC	RAM	45- 33
170	4164	NMC4164J-2	NSC	RAM	45- 34
171	4164	TMM4164C-3	TOSJ	RAM	45- 39
172	4164	TMM4164C-4	TOSJ	RAM	45- 49
173	4164	TMS4164-10JDL	TII	RAM	38- 37
174	4164	TMS4164-12JDL	TII	RAM	38- 38
175	4164	TMS4164-15JDL	TII	RAM	45- 40
176	4164	TMS4164-20JDL	TII	RAM	45- 50
177	4164	TMS4164JDL	TII	RAM	45- 41
178	4164	uPD4164C-1	NECM	RAM	45- 55
179	4164	uPD4164C-2	NECM	RAM	45- 51
180	4164	uPD4164D2	NECM	RAM	45- 52
181	4164	uPD4164D-1	NECJ	RAM	45- 56
182	4164	uPD4164D-1	NECM	RAM	45- 56
183	4164	uPD4164D-2	NECJ	RAM	45- 53
184	4164	uPD4164D-2	NECM	RAM	45- 53
185	4164	uPD4164D-3	NECJ	RAM	45- 42
186	4174	SFC4174E	NPC	SHIFT REG	76- 24
187	4174	SFC4174E	THCF	SHIFT REG	76- 24
188	4174	SFC4174EM	NPC	SHIFT REG	76- 25
189	4174	SFC4174EM	THCF	SHIFT REG	76- 25
190	4174	SFC4174ET	NPC	SHIFT REG	76- 26
191	4174	SFC4174ET	THCF	SHIFT REG	76- 26
192	4175	SFC4175E	NPC	SHIFT REG	70- 13
193	4175	SFC4175E	THCF	SHIFT REG	70- 13
194	4175	SFC4175EM	NPC	SHIFT REG	70- 14
195	4175	SFC4175EM	THCF	SHIFT REG	70- 14
196	4175	SFC4175ET	NPC	SHIFT REG	70- 15
197	4175	SFC4175ET	THCF	SHIFT REG	70- 15
198	4200	4200ACD	EMM	RAM	42- 19
199	4200	4200ACP	EMM	RAM	42- 20
200	4200	4200BCD	EMM	RAM	42- 15
201	4200	4200BCP	EMM	RAM	42- 16
202	4200	4200UMC	EMM	RAM	42- 36
203	4200	4200USC	EMM	RAM	42- 21
204	4200	M4200-UMC	EMM	RAM	42- 51
205	4200	M4200USC	EMM	RAM	42- 30
206	4203	MM4203Q	NSC	ROM	49- 61
207	4204	MM4204Q	NSC	ROM	52-102
208	4214	MM4214J	NSC	ROM	51- 93
209	4220	MM4220AEJ	NSC	CODE CONV	64- 31
210	4220	MM4220DFJ	NSC	SPECIAL	88- 16
211	4221	MM4221RQJ#1	NSC	CODE CONV	64- 40
212	4221	MM4221RQJ#2	NSC	CODE CONV	64-100
213	4221	MM4221RRJ	NSC	CODE CONV	64- 3
214	4221	MM4221TMJ	NSC	CODE CONV	64- 42
215	4230	MM4230BO1J	NSC	CODE CONV	64- 86
216	4230	MM4230BOJ	NSC	CODE CONV	64- 89
217	4230	MM4230KP2J	NSC	CODE CONV	64- 23
218	4230	MM4230KPJ	NSC	CODE CONV	64- 27
219	4231	MM4231RP2J	NSC	CODE CONV	64- 50
220	4231	MM4231RPJ	NSC	CODE CONV	64- 54

SYMBOLS AND CODES EXPLAINED IN INTERPRETER

GENERIC PRODUCT INDEX

IN ORDER OF: (1)GENERIC NO. (2)MFR TYPE NO.

LINE No.	1 GENERIC NO.	2 MANUFACTURER TYPE NO.	MFR. CODE	PRODUCT CLASS	PAGE & LINE
1	4240	MM4240AAJ	NSC	CHAR GEN	63- 37
2	4240	MM4240ABUJ	NSC	CHAR GEN	63- 38
3	4240	MM4240ABZJ	NSC	CHAR GEN	63- 33
4	4240	MM4240AEJ	NSC	CHAR GEN	63- 34
5	4241	MM4241ABLJ	NSC	CHAR GEN	63- 10
6	4244	TMS4244JL	TII	RAM	40- 96
7	4244	TMS4244NL	TII	RAM	40- 97
8	4245	TMS4245JL	TII	RAM	33- 91
9	4245	TMS4245NL	TII	RAM	33- 92
10	4264	S4264C	AMI	ROM	60- 87
11	4264	S4264D	AMI	ROM	60- 88
12	4264	S4264P	AMI	ROM	60- 89
13	4280	MM4280J	NSC	RAM	39- 34
14	4300	4300ACD	EMM	RAM	42- 13
15	4304	MC4304F	MOTA	RAM	19- 21
16	4304	MC4304L	MOTA	RAM	19- 22
17	4305	MC4305F	MOTA	RAM	19- 23
18	4305	MC4305L	MOTA	RAM	19- 24
19	4315	HM4315P	HITJ	RAM	41- 84
20	4330	MD4330BC	MITC	SHIFT REG	83-102
21	4330	MD4330BD	MITC	SHIFT REG	83- 97
22	4330	MD4330BE	MITC	SHIFT REG	83- 98
23	4331	MS4331BC	MITC	SHIFT REG	83-100
24	4331	MS4331BD	MITC	SHIFT REG	83-101
25	4331	MD4331BE	MITC	SHIFT REG	83- 99
26	4332	MD4332BC	MITC	SHIFT REG	83-104
27	4332	MD4332BD	MITC	SHIFT REG	83-105
28	4332	MD4332BE	MITC	SHIFT REG	83-106
29	4332	MK4332D-3	MOS	RAM	45- 21
30	4334	HM4334P-3	HITJ	RAM	34-108
31	4334	HM4334P-4	HITJ	RAM	35- 78
32	4364	MCM4364L	MOTA	RAM	20- 70
33	4505	HEF4505BD	MULB	RAM	21- 40
34	4505	HEF4505BD	PHIN	RAM	21- 40
35	4505	HEF4505BD	RTCF	RAM	21- 40
36	4505	HEF4505BP	MULB	RAM	21- 41
37	4505	HEF4505BP	PHIN	RAM	21- 41
38	4505	HEF4505BP	RTCF	RAM	21- 41
39	4516	MK4516E-12	MOS	RAM	43- 36
40	4516	MK4516E-15	MOS	RAM	43- 37
41	4516	MK4516E-20	MOS	RAM	44- 16
42	4516	MK4516J-12	MOS	RAM	43- 39
43	4516	MK4516N-12	MOS	RAM	43- 40
44	4516	MK4516N-15	MOS	RAM	43- 38
45	4516	MK4516N-20	MOS	RAM	44- 17
46	4516	MCM4516C	MOTA	RAM	43- 60
47	4516	MCM4516L	MOTA	RAM	43- 61
48	4517	HEF4517BD	MULB	SHIFT REG	84- 75
49	4517	HEF4517BD	PHIN	SHIFT REG	84- 75
50	4517	HEF4517BP	MULB	SHIFT REG	84- 76
51	4517	HEF4517BP	PHIN	SHIFT REG	84- 76
52	4517	CD4517BD	RCA	SHIFT REG	84- 71
53	4517	CD4517BE	RCA	SHIFT REG	84- 72
54	4517	CD4517BF	RCA	SHIFT REG	84- 73
55	4517	CD4517BH	RCA	SHIFT REG	84- 74
56	4517	MCM4517-10C	MOTA	RAM	43- 52
57	4517	MCM4517-10P	MOTA	RAM	43- 53
58	4517	MCM4517-12C	MOTA	RAM	43- 62
59	4517	MCM4517-12P	MOTA	RAM	43- 63
60	4517	MCM4517-15C	MOTA	RAM	43- 86
61	4517	MCM4517-15P	MOTA	RAM	43- 87
62	4528	MK4528D-20	MOS	RAM	45- 57
63	4557	HEF4557BD	MULB	SHIFT REG	84- 63
64	4557	HEF4557BD	PHIN	SHIFT REG	84- 63
65	4557	HEF4557BP	MULB	SHIFT REG	84- 64
66	4557	HEF4557BP	PHIN	SHIFT REG	84- 64
67	4557	HEF4557BT	PHIN	SHIFT REG	84- 65
68	4557	4557BDC	FSC	SHIFT REG	84- 22
69	4557	4557BDM	FSC	SHIFT REG	84- 23
70	4557	4557BFC	FSC	SHIFT REG	84- 24
71	4557	4557BFM	FSC	SHIFT REG	84- 25
72	4557	4557BPC	FSC	SHIFT REG	84- 26
73	4592	AY3-4592	GIC	CODE CONV	64- 99
74	4700	EA4700DC	EAI	ROM	54- 72
75	4700	EA4700DL	EAI	ROM	54-107
76	4700	EA4700PC	EAI	ROM	54- 73
77	4716	HM4716A-1	HITJ	RAM	43- 57
78	4716	HM4716A-2	HITJ	RAM	43- 73
79	4716	HM4716A-3	HITJ	RAM	43-109
80	4716	HM4716A-4	HITJ	RAM	44- 42
81	4716	HM4716AP-1	HITJ	RAM	43- 58
82	4716	HM4716AP-2	HITJ	RAM	43- 74
83	4716	HM4716AP-3	HITJ	RAM	43-110
84	4716	HM4716AP-4	HITJ	RAM	44- 43
85	4720	HEF4720	RTCF	RAM	24- 1
86	4720	HEF4720B	VALG	RAM	23- 87
87	4720	HEF4720BD	MULB	RAM	23- 97
88	4720	HEF4720BD	PHIN	RAM	23- 97
89	4720	HEF4720BD	RTCF	RAM	23- 97
90	4720	HEF4720BP	MULB	RAM	23- 98
91	4720	HEF4720BP	PHIN	RAM	23- 98
92	4720	HEF4720BP	RTCF	RAM	23- 98
93	4720	HEF4720P	VALG	RAM	23-108
94	4720	HEF4720VD	MULB	RAM	23-105
95	4720	HEF4720VD	PHIN	RAM	23-105
96	4720	HEF4720VD	RTCF	RAM	23-105
97	4720	HEF4720VP	MULB	RAM	23-106
98	4720	HEF4720VP	PHIN	RAM	23-106
99	4720	HEF4720VP	RTCF	RAM	23-106
100	4720	4720BDC	FSC	RAM	23- 99
101	4720	4720BDM	FSC	RAM	23-100
102	4720	4720BFC	FSC	RAM	23-101
103	4720	4720BFM	FSC	RAM	23-102
104	4720	4720BPC	FSC	RAM	23-103
105	4721	HEF4721B	VALG	RAM	25- 57
106	4721	HEF4721P	VALG	RAM	25- 58
107	4721	4721BDC	FSC	RAM	25- 68
108	4721	4721BDM	FSC	RAM	25- 69
109	4721	4721BFC	FSC	RAM	25- 70
110	4721	4721BFM	FSC	RAM	25- 71
111	4721	4721BPC	FSC	RAM	25- 72
112	4725	4725BDC	FSC	RAM	20-106
113	4725	4725BDM	FSC	RAM	20-107
114	4725	4725BFC	FSC	RAM	20-108
115	4725	4725BFM	FSC	RAM	20-109
116	4725	4725BPC	FSC	RAM	20-110
117	4731	HEF4731BD	MULB	SHIFT REG	84- 94
118	4731	HEF4731BD	PHIN	SHIFT REG	84- 94
119	4731	HEF4731BP	MULB	SHIFT REG	84- 95
120	4731	HEF4731BP	PHIN	SHIFT REG	84- 95
121	4731	HEF4731VD	MULB	SHIFT REG	84- 96
122	4731	HEF4731VD	PHIN	SHIFT REG	84- 96
123	4731	HEF4731VP	MULB	SHIFT REG	84- 97
124	4731	HEF4731VP	PHIN	SHIFT REG	84- 97
125	4731	4731BDC	FSC	SHIFT REG	84- 86
126	4731	4731BDM	FSC	SHIFT REG	84- 87
127	4731	4731BFC	FSC	SHIFT REG	84- 88
128	4731	4731BFM	FSC	SHIFT REG	84- 89
129	4731	4731BPC	FSC	SHIFT REG	84- 90
130	4732	ROM4732	SMC	ROM	59- 64
131	4732	TMS4732NL	TII	ROM	59- 65
132	4735	4735BDC	FSC	ROM	49- 18
133	4735	4735BDM	FSC	ROM	49- 19
134	4735	4735BFC	FSC	ROM	49- 20
135	4735	4735BFM	FSC	ROM	49- 21
136	4735	4735BPC	FSC	ROM	49- 22
137	4736	HEF4736B	VALG	RAM	30- 27
138	4736	HEF4736P	VALG	RAM	30- 28
139	4736	4736BDC	FSC	RAM	30- 77
140	4736	4736BDM	FSC	RAM	30- 78
141	4736	4736BFC	FSC	RAM	30- 79
142	4736	4736BFM	FSC	RAM	30- 80
143	4736	4736BPC	FSC	RAM	30- 81
144	4764	TMS4764NL	TII	ROM	60- 61
145	4801	MK4801AJ-55	MOS	RAM	37- 56
146	4801	MK4801AJ-70	MOS	RAM	37- 57
147	4801	MK4801AJ-90	MOS	RAM	37- 59
148	4801	MK4801AN-55	MOS	RAM	37- 62
149	4801	MK4801AN-70	MOS	RAM	37- 58
150	4801	MK4801AN-90	MOS	RAM	37- 60
151	4801	MK4801AP-70	MOS	RAM	37- 63
152	4802	MK4802J-1	MOS	RAM	38- 4
153	4802	MK4802J-3	MOS	RAM	37-106
154	4802	MK4802J-70	MOS	RAM	37-100
155	4802	MK4802J-90	MOS	RAM	37-102
156	4802	MK4802N-1	MOS	RAM	37-104
157	4802	MK4802N-3	MOS	RAM	38- 14
158	4802	MK4802N-70	MOS	RAM	37-101
159	4802	MK4802N-90	MOS	RAM	37-103
160	4802	MK4802P-1	MOS	RAM	38- 5
161	4802	MK4802P-3	MOS	RAM	38- 15
162	4802	MK4802P-70	MOS	RAM	37-109
163	4802	MK4802P-90	MOS	RAM	37-110
164	4808	MK4808-5	MOS	RAM	37- 55
165	4816	MK4816J-3	MOS	RAM	37- 95
166	4816	MK4816J-4	MOS	RAM	37- 96
167	4816	MK4816J-5	MOS	RAM	37- 98
168	4816	MK4816N-4	MOS	RAM	37- 97
169	4816	MK4816N-5	MOS	RAM	37- 99
170	4816	HM4816	HITJ	RAM	43- 51
171	4864	NMC4864	NSC	RAM	43- 32
172	4864	HM4864-2	HITJ	RAM	45- 35
173	4864	HM4864-3	HITJ	RAM	45- 43
174	5003	MCM5003AL	MOTA	ROM	47- 16
175	5003	MCM5003L	MOTA	ROM	47- 17
176	5004	MCM5004AL	MOTA	ROM	47- 18
177	5004	MCM5004L	MOTA	ROM	47- 19
178	5015	SR5015-80	SMC	SHIFT REG	84-100
179	5015	SR5015-81	SMC	SHIFT REG	84-108
180	5015	SR5015-133	SMC	SHIFT REG	85- 44
181	5017	SR5017	SMC	SHIFT REG	85- 45
182	5018	SR5018	SMC	SHIFT REG	85- 1
183	5047	TC5047AP-1	TOSJ	RAM	33- 36
184	5047	TC5047AP-2	TOSJ	RAM	33- 42
185	5047	TC5047APL-1	TOSJ	RAM	33- 37
186	5047	TC5047APL-2	TOSJ	RAM	33- 43
187	5055	MM5055D	AMD	SHIFT REG	85- 39
188	5055	MM5055N	AMD	SHIFT REG	85- 40
189	5055	5055J18	MMI	CHAR GEN	62- 9
190	5055	5055J	MMI	CHAR GEN	62- 46
191	5056	MM5056H	AMD	SHIFT REG	85- 75
192	5057	MM5057D	AMD	SHIFT REG	85- 87
193	5057	MM5057N	AMD	SHIFT REG	85- 88
194	5086	5086J24	MMI	SPECIAL	88- 29
195	5087	5087J24	MMI	SPECIAL	88- 30
196	5101	P5101L	ITL	RAM	25- 49
197	5101	P5101L-1	ITL	RAM	25- 38
198	5101	P5101L-3	ITL	RAM	25- 39
199	5101	MN5101	MATJ	RAM	25- 56
200	5101	MWS5101ADL3	RCA	RAM	25- 63
201	5101	MWS5101AEL2	RCA	RAM	25- 61
202	5101	MWS5101AEL3	RCA	RAM	25- 64
203	5101	MWS5101DL3	RCA	RAM	25- 65
204	5101	MWS5101EL2	RCA	RAM	25- 62
205	5101	MWS5101EL3	RCA	RAM	25- 66
206	5101	C5101L	ITL	RAM	25- 43
207	5101	C5101L-1	ITL	RAM	25- 28
208	5101	C5101L-3	ITL	RAM	25- 44
209	5101	S5101	AMI	RAM	25- 79
210	5101	S5101-1	AMI	RAM	25- 75
211	5101	S5101-3	AMI	RAM	25- 80
212	5101	S5101-8	AMI	RAM	25- 85
213	5101	S5101L1	AMI	RAM	25- 76
214	5101	S5101L3	AMI	RAM	25- 81
215	5101	S5101L8	AMI	RAM	25- 86
216	5101	S5101L	AMI	RAM	25- 82
217	5101	MBC5101L4	AMI	RAM	24- 21
218	5101	MC5101-4	ITL	RAM	25- 52
219	5101	MC5101L-4	ITL	RAM	25- 53
220	5101	uPD5101-E	NECJ	RAM	25- 88

SYMBOLS AND CODES EXPLAINED IN INTERPRETER

GENERIC PRODUCT INDEX

IN ORDER OF: (1)GENERIC NO. (2)MFR TYPE NO.

LINE No.	[1] GENERIC NO.	[2] MANUFACTURER TYPE NO.	MFR. CODE	PRODUCT CLASS	PAGE & LINE
1	5101	uPD5101C-E	NECJ	RAM	25- 42
2	5101	uPD5101LC	NECJ	RAM	25- 84
3	5101	uPD5101LC	NECM	RAM	25- 84
4	5101	uPD5101LC-1	NECJ	RAM	25- 78
5	5101	uPD5101LC-1	NECM	RAM	25- 78
6	5101	SCM5101-1	SSS	RAM	25- 77
7	5101	SCM5101-1A	SSS	RAM	25- 67
8	5101	SCM5101-3	SSS	RAM	25- 83
9	5101	SCM5101-8	SSS	RAM	25- 87
10	5102	SCM5102-1	SSS	RAM	30- 74
11	5102	SCM5102-1A	SSS	RAM	30- 73
12	5102	SCM5102-3	SSS	RAM	30- 82
13	5102	SCM5102-8	SSS	RAM	30- 83
14	5104	MSM5104-2	OKIJ	RAM	42-103
15	5104	MSM5104-3	OKIJ	RAM	42-104
16	5114	MSM5114-2AS	OKIJ	RAM	34- 34
17	5114	MSM5114-2RS	OKIJ	RAM	34- 35
18	5114	MSM5114-3AS	OKIJ	RAM	35- 26
19	5114	MSM5114-3RS	OKIJ	RAM	35- 27
20	5114	MWS5114D	RCA	RAM	33- 38
21	5114	MWS5114E	RCA	RAM	33- 39
22	5114	SCM5114-1	SSS	RAM	33- 21
23	5114	SCM5114-3	SSS	RAM	33- 22
24	5114	SCM5114-5	SSS	RAM	33- 32
25	5114	SCM5114-8	SSS	RAM	33- 33
26	5115	MSM5115-2	OKIJ	RAM	36-101
27	5115	MSM5115-3	OKIJ	RAM	36-102
28	5120	RO3-5120	GIC	ROM	52-104
29	5155	5155J18	MMI	CHAR GEN	62- 10
30	5155	5155J	MMI	CHAR GEN	62- 47
31	5200	IM5200CJG	INL	SPECIAL	87- 79
32	5203	MM5203Q	NSC	ROM	49- 62
33	5204	MM5204Q	NSC	ROM	52-101
34	5204	MM5204Q-1	NSC	ROM	52-100
35	5214	MM5214J	NSC	ROM	51- 94
36	5214	MM5214N	NSC	ROM	51- 95
37	5220	MM5220AEJ	NSC	CODE CONV	64- 32
38	5220	MM5220AEN	NSC	CODE CONV	64- 33
39	5220	MM5220DFJ	NSC	SPECIAL	88- 17
40	5220	MM5220DFN	NSC	SPECIAL	88- 18
41	5221	MM5221RQJ#1	NSC	CODE CONV	64- 41
42	5221	MM5221RQJ#2	NSC	CODE CONV	64-101
43	5221	MM5221TMJ	NSC	CODE CONV	64- 43
44	5221	MM5221TMN	NSC	CODE CONV	64-102
45	5230	MM5230BO1J	NSC	CODE CONV	64- 87
46	5230	MM5230BO1N	NSC	CODE CONV	64- 88
47	5230	MM5230BOJ	NSC	CODE CONV	64- 90
48	5230	MM5230BON	NSC	CODE CONV	64- 91
49	5230	MM5230J#1	NSC	ROM	49- 26
50	5230	MM5230KP2J	NSC	CODE CONV	64- 24
51	5230	MM5230KP2N	NSC	CODE CONV	64- 25
52	5230	MM5230KPN	NSC	CODE CONV	64- 28
53	5230	MM5230N	NSC	ROM	49- 27
54	5230	MM5230N#1	NSC	ROM	49- 28
55	5231	MM5231RP2J	NSC	CODE CONV	64- 51
56	5231	MM5231RP2N	NSC	CODE CONV	64- 52
57	5231	MM5231RPJ	NSC	CODE CONV	64- 55
58	5231	MM5231RPN	NSC	CODE CONV	64- 56
59	5240	MM5240AAJ	NSC	CHAR GEN	63- 39
60	5240	MM5240ABUJ	NSC	CHAR GEN	63- 40
61	5240	MM5240ABZN	NSC	CHAR GEN	63- 35
62	5240	MM5240AEN	NSC	CHAR GEN	63- 36
63	5241	MM5241ABLJ	NSC	CHAR GEN	63- 11
64	5241	MM5241ABLN	NSC	CHAR GEN	63- 12
65	5257	NMC5257AJ	NSC	RAM	40- 93
66	5257	NMC5257AN	NSC	RAM	40- 94
67	5257	MM5257J	NSC	RAM	41- 95
68	5257	MM5257J-2	NSC	RAM	41- 18
69	5257	MM5257J-2L	NSC	RAM	41- 19
70	5257	MM5257J-3	NSC	RAM	41- 71
71	5257	MM5257J-3L	NSC	RAM	41- 72
72	5257	MM5257J-6	NSC	RAM	41-101
73	5257	MM5257J-6L	NSC	RAM	41-102
74	5257	MM5257J-L	NSC	RAM	41- 96
75	5257	MM5257N	NSC	RAM	41- 97
76	5257	MM5257N-2	NSC	RAM	41- 20
77	5257	MM5257N-2L	NSC	RAM	41- 21
78	5257	MM5257N-3	NSC	RAM	41- 73
79	5257	MM5257N-3L	NSC	RAM	41- 74
80	5257	MM5257N-6	NSC	RAM	41-103
81	5257	MM5257N-6L	NSC	RAM	41-104
82	5257	MM5257N-L	NSC	RAM	41- 98
83	5280	MM5280J	NSC	RAM	38-110
84	5280	MM5280J-5	NSC	RAM	38- 40
85	5280	MM5280N	NSC	RAM	39- 1
86	5280	MM5280N-5	NSC	RAM	38- 41
87	5290	MM5290J-2	NSC	RAM	43- 92
88	5290	MM5290J-3	NSC	RAM	44- 24
89	5290	MM5290J-4	NSC	RAM	44- 60
90	5290	MM5290N-2	NSC	RAM	43- 93
91	5290	MM5290N-3	NSC	RAM	44- 25
92	5290	MM5290N-4	NSC	RAM	44- 61
93	5290	5290J24	MMI	CHAR GEN	62-110
94	5291	5291J24	MMI	CHAR GEN	63- 1
95	5292	5292J24	MMI	CHAR GEN	63- 3
96	5293	5293J24	MMI	CHAR GEN	63- 4
97	5295	NMC5295J-2	NSC	RAM	43- 65
98	5295	NMC5295J-3	NSC	RAM	43- 54
99	5295	NMC5295J-4	NSC	RAM	43- 66
100	5295	NMC5295N-2	NSC	RAM	43- 49
101	5295	NMC5295N-3	NSC	RAM	43- 55
102	5295	NMC5295N-4	NSC	RAM	43- 67
103	5298	MM5298AJ-2	NSC	RAM	43- 94
104	5298	MM5298AJ-3	NSC	RAM	44- 26
105	5298	MM5298AJ-4	NSC	RAM	44- 62
106	5298	MM5298AN-2	NSC	RAM	43- 95
107	5298	MM5298AN-3	NSC	RAM	44- 27
108	5298	MM5298AN-4	NSC	RAM	44- 63
109	5298	MM5298BJ-2	NSC	RAM	43- 96
110	5298	MM5298BJ-3	NSC	RAM	44- 28
111	5298	MM5298BJ-4	NSC	RAM	44- 64
112	5298	MM5298BN-2	NSC	RAM	43- 97
113	5298	MM5298BN-3	NSC	RAM	44- 29
114	5298	MM5298BN-4	NSC	RAM	44- 65
115	5303	MCM5303AL	MOTA	ROM	47- 20
116	5303	MCM5303L	MOTA	ROM	47- 21
117	5304	MCM5304AL	MOTA	ROM	47- 22
118	5304	MCM5304L	MOTA	ROM	47- 23
119	5316	SCM5316	SSS	ROM	57- 88
120	5317	SCM5317	SSS	ROM	59- 29
121	5481	SN5481AJ	TII	RAM	19- 26
122	5481	SN5481AW	TII	RAM	19- 27
123	5484	SN5484AJ	TII	RAM	19- 28
124	5484	SN5484AW	TII	RAM	19- 29
125	5484	MC5484L	MOTA	RAM	19- 25
126	5489	SN5489J	AMD	RAM	20- 76
127	5489	SN5489W	AMD	RAM	20- 77
128	5489	5489DM	FSC	RAM	20- 88
129	5489	5489FM	FSC	RAM	20- 89
130	5491	SN5491AJ	TII	SHIFT REG	82- 50
131	5491	SN5491AW	TII	SHIFT REG	82- 51
132	5491	RC5491A	MULB	SHIFT REG	82- 67
133	5491	RC5491F	MULB	SHIFT REG	82- 68
134	5491	RC5491W	MULB	SHIFT REG	82- 69
135	5491	5491ADM	FSC	SHIFT REG	82- 29
136	5491	5491AFM	FSC	SHIFT REG	82- 30
137	5491	S5491A	PHIN	SHIFT REG	82- 41
138	5491	S5491A	SIC	SHIFT REG	82- 41
139	5491	S5491AF	PHIN	SHIFT REG	82- 42
140	5491	S5491AF	SIC	SHIFT REG	82- 42
141	5491	S5491AW	PHIN	SHIFT REG	82- 43
142	5491	S5491AW	SIC	SHIFT REG	82- 43
143	5491	S5491F	PHIN	SHIFT REG	82- 44
144	5491	S5491F	SIC	SHIFT REG	82- 44
145	5491	S5491F	VALG	SHIFT REG	82- 44
146	5491	S5491W	PHIN	SHIFT REG	82- 45
147	5491	S5491W	SIC	SHIFT REG	82- 45
148	5491	S5491W	VALG	SHIFT REG	82- 45
149	5491	ZN5491AE	FERB	SHIFT REG	82- 54
150	5491	ZN5491AJ	FERB	SHIFT REG	82- 55
151	5494	SN5494J	TII	SHIFT REG	73- 39
152	5494	SN5494W	TII	SHIFT REG	73- 40
153	5494	RC5494B	MULB	SHIFT REG	73- 53
154	5494	RC5494F	MULB	SHIFT REG	73- 54
155	5494	RC5494W	MULB	SHIFT REG	73- 55
156	5494	5494DM	FSC	SHIFT REG	73- 60
157	5494	5494FM	FSC	SHIFT REG	73- 61
158	5494	S5494B	MULB	SHIFT REG	73- 36
159	5494	S5494B	PHIN	SHIFT REG	73- 36
160	5494	S5494B	SIC	SHIFT REG	73- 36
161	5494	S5494F	PHIN	SHIFT REG	73- 37
162	5494	S5494F	SIC	SHIFT REG	73- 37
163	5494	S5494F	VALG	SHIFT REG	73- 37
164	5494	S5494W	PHIN	SHIFT REG	73- 38
165	5494	S5494W	SIC	SHIFT REG	73- 38
166	5494	S5494W	VALG	SHIFT REG	73- 38
167	5494	MC5494L	MOTA	SHIFT REG	73- 32
168	5494	ZN5494E	FERB	SHIFT REG	73- 43
169	5494	ZN5494J	FERB	SHIFT REG	73- 44
170	5495	SN5495AJ	TII	SHIFT REG	70- 16
171	5495	SN5495AW	TII	SHIFT REG	70- 17
172	5495	RC5495A	MULB	SHIFT REG	69- 91
173	5495	RC5495F	MULB	SHIFT REG	69- 92
174	5495	5495ADM	FSC	SHIFT REG	69- 48
175	5495	5495AFM	FSC	SHIFT REG	69- 49
176	5495	S5495A	PHIN	SHIFT REG	70- 2
177	5495	S5495A	SIC	SHIFT REG	70- 2
178	5495	S5495AF	PHIN	SHIFT REG	70- 3
179	5495	S5495AF	SIC	SHIFT REG	70- 3
180	5495	S5495AF	VALG	SHIFT REG	70- 3
181	5495	S5495AW	PHIN	SHIFT REG	70- 4
182	5495	S5495AW	SIC	SHIFT REG	70- 4
183	5495	S5495AW	VALG	SHIFT REG	70- 4
184	5495	S5495F	PHIN	SHIFT REG	70- 5
185	5495	S5495F	SIC	SHIFT REG	70- 5
186	5495	MC5495F	MOTA	SHIFT REG	71- 93
187	5495	MC5495L	MOTA	SHIFT REG	71- 94
188	5495	ZN5495AE	FERB	SHIFT REG	73- 52
189	5495	ZN5495AJ	FERB	SHIFT REG	70- 37
190	5496	SN5496J	TII	SHIFT REG	74- 88
191	5496	SN5496W	TII	SHIFT REG	74- 89
192	5496	RC5496B	MULB	SHIFT REG	74- 78
193	5496	RC5496F	MULB	SHIFT REG	74- 79
194	5496	RC5496W	MULB	SHIFT REG	74- 80
195	5496	5496DM	FSC	SHIFT REG	74- 66
196	5496	5496FM	FSC	SHIFT REG	74- 67
197	5496	S5496B	PHIN	SHIFT REG	74- 81
198	5496	S5496B	SIC	SHIFT REG	74- 81
199	5496	S5496F	PHIN	SHIFT REG	74- 82
200	5496	S5496F	SIC	SHIFT REG	74- 82
201	5496	S5496F	VALG	SHIFT REG	74- 82
202	5496	S5496W	PHIN	SHIFT REG	74- 83
203	5496	S5496W	SIC	SHIFT REG	74- 83
204	5496	S5496W	VALG	SHIFT REG	74- 83
205	5496	MC5496L	MOTA	SHIFT REG	74- 75
206	5496	ZN5496E	FERB	SHIFT REG	74- 92
207	5496	ZN5496J	FERB	SHIFT REG	74- 93
208	5501	TC5501D	TOSJ	RAM	25- 40
209	5501	TC5501D-1	TOSJ	RAM	25- 50
210	5501	TC5501P	TOSJ	RAM	25- 41
211	5501	TC5501P-1	TOSJ	RAM	25- 51
212	5504	TC5504AD-2	TOSJ	RAM	40- 24
213	5504	TC5504AD-3	TOSJ	RAM	40- 32
214	5504	TC5504ADL-2	TOSJ	RAM	40- 25
215	5504	TC5504ADL-3	TOSJ	RAM	40- 33
216	5504	TC5504AP-2	TOSJ	RAM	40- 26
217	5504	TC5504AP-3	TOSJ	RAM	40- 34
218	5504	TC5504APL-2	TOSJ	RAM	40- 27
219	5504	TC5504APL-3	TOSJ	RAM	40- 35
220	5504	TC5504P	TOSJ	RAM	40- 39

SYMBOLS AND CODES EXPLAINED IN INTERPRETER

GENERIC PRODUCT INDEX

IN ORDER OF: (1)GENERIC NO. (2)MFR TYPE NO.

LINE No.	1 GENERIC NO.	2 MANUFACTURER TYPE NO.	MFR. CODE	PRODUCT CLASS	PAGE & LINE
1	5504	TC5504P-1	TOSJ	RAM	40- 41
2	5504	TC5504P-2	TOSJ	RAM	40- 43
3	5504	TC5504PL	TOSJ	RAM	40- 40
4	5504	TC5504PL-1	TOSJ	RAM	40- 42
5	5504	TC5504PL-2	TOSJ	RAM	40- 44
6	5508	TC5508P	TOSJ	RAM	29-105
7	5508	TC5508P-1	TOSJ	RAM	30- 16
8	5508	TC5508P-4	TOSJ	RAM	29-106
9	5514	TC5514AD-2	TOSJ	RAM	33- 12
10	5514	TC5514AD-3	TOSJ	RAM	33- 23
11	5514	TC5514ADL-2	TOSJ	RAM	33- 13
12	5514	TC5514ADL-3	TOSJ	RAM	33- 24
13	5514	TC5514AP-2	TOSJ	RAM	33- 14
14	5514	TC5514AP-3	TOSJ	RAM	33- 25
15	5514	TC5514APL-2	TOSJ	RAM	33- 15
16	5514	TC5514APL-3	TOSJ	RAM	33- 26
17	5514	TC5514P	TOSJ	RAM	33- 34
18	5514	TC5514P-1	TOSJ	RAM	33- 40
19	5514	TC5514P-2	TOSJ	RAM	33- 44
20	5514	TC5514PL	TOSJ	RAM	33- 35
21	5514	TC5514PL-1	TOSJ	RAM	33- 41
22	5514	TC5514PL-2	TOSJ	RAM	33- 45
23	5516	TC5516AP	TOSJ	RAM	37-107
24	5516	TC5516APL	TOSJ	RAM	37-108
25	5532	SCM5532	SSS	ROM	60- 43
26	5534	SCM5534	SSS	ROM	60- 42
27	5600	IM5600CDE	INL	ROM	46- 77
28	5600	IM5600CFE	INL	ROM	46- 78
29	5600	IM5600CJE	INL	ROM	46- 79
30	5600	IM5600CPE	INL	ROM	46- 80
31	5600	IM5600MDE	INL	ROM	46- 81
32	5600	IM5600MFE	INL	ROM	46- 82
33	5600	IM5600MJE	INL	ROM	46- 83
34	5603	IM5603ACDE	INL	ROM	48- 60
35	5603	IM5603ACFE	INL	ROM	48- 61
36	5603	IM5603ACJE	INL	ROM	48- 62
37	5603	IM5603ACPE	INL	ROM	48- 63
38	5603	IM5603AMDE	INL	ROM	48- 82
39	5603	IM5603AMFE	INL	ROM	48- 83
40	5603	IM5603AMJE	INL	ROM	48- 64
41	5603	IM5603CDE#	INL	ROM	48- 65
42	5603	IM5603MDE#	INL	ROM	48- 66
43	5604	IM5604CDE	INL	ROM	50- 77
44	5604	IM5604CFE#	INL	ROM	50- 78
45	5604	IM5604CJE	INL	ROM	50- 79
46	5604	IM5604CPE#	INL	ROM	50- 80
47	5604	IM5604MDE	INL	ROM	50- 81
48	5604	IM5604MFE	INL	ROM	50- 82
49	5604	IM5604MJE	INL	ROM	50- 83
50	5608	IM5608-1ID	INL	RAM	29- 79
51	5608	IM5608-1IJ	INL	RAM	29- 80
52	5608	IM5608-1MD	INL	RAM	29- 81
53	5608	IM5608-1MF	INL	RAM	29- 82
54	5608	IM5608-1MJ	INL	RAM	29- 83
55	5608	IM5608A-1ID	INL	RAM	29- 39
56	5608	IM5608A-1IJ	INL	RAM	29- 40
57	5608	IM5608A-1MD	INL	RAM	29- 41
58	5608	IM5608A-1MF	INL	RAM	29- 42
59	5608	IM5608A-1MS	INL	RAM	29- 43
60	5608	IM5608AID	INL	RAM	29- 49
61	5608	IM5608AIJ	INL	RAM	29- 50
62	5608	IM5608AMD	INL	RAM	29- 51
63	5608	IM5608AMF	INL	RAM	29- 52
64	5608	IM5608AMJ	INL	RAM	29- 53
65	5608	IM5608CJ	INL	RAM	30- 17
66	5608	IM5608CP	INL	RAM	30- 18
67	5608	IM5608ID	INL	RAM	29-109
68	5608	IM5608IJ	INL	RAM	29-110
69	5608	IM5608IP	INL	RAM	30- 1
70	5608	IM5608MD	INL	RAM	30- 2
71	5608	IM5608MF	INL	RAM	30- 3
72	5608	IM5608MJ	INL	RAM	30- 4
73	5610	IM5610CDE	INL	ROM	46- 84
74	5610	IM5610CFE	INL	ROM	46- 85
75	5610	IM5610CJE	INL	ROM	46- 86
76	5610	IM5610CPE	INL	ROM	46- 87
77	5610	IM5610MDE	INL	ROM	46- 88
78	5610	IM5610MFE	INL	ROM	46- 89
79	5610	IM5610MJE	INL	ROM	46- 90
80	5623	IM5623ACDE	INL	ROM	48- 67
81	5623	IM5623ACFE	INL	ROM	48- 68
82	5623	IM5623ACJE	INL	ROM	48- 69
83	5623	IM5623ACPE	INL	ROM	48- 70
84	5623	IM5623AMDE	INL	ROM	48- 71
85	5623	IM5623AMFE	INL	ROM	48- 72
86	5623	IM5623AMJE	INL	ROM	48- 73
87	5623	IM5623CDE	INL	ROM	48- 74
88	5623	IM5623CFE	INL	ROM	48- 75
89	5623	IM5623CPE	INL	ROM	48- 76
90	5623	IM5623MDE	INL	ROM	48- 77
91	5623	IM5623MFE	INL	ROM	48- 78
92	5624	IM5624CDE	INL	ROM	50- 84
93	5624	IM5624CFE#	INL	ROM	50- 85
94	5624	IM5624CJE	INL	ROM	50- 86
95	5624	IM5624CPE#	INL	ROM	50- 87
96	5624	IM5624MDE	INL	ROM	50- 88
97	5624	IM5624MFE	INL	ROM	50- 89
98	5624	IM5624MJE	INL	ROM	50- 90
99	6055	6055J18	MMI	CHAR GEN	62- 11
100	6056	6056J24	MMI	CHAR GEN	62- 12
101	6061	6061J24	MMI	CHAR GEN	62- 17
102	6062	6062J24	MMI	CHAR GEN	62- 18
103	6071	6071J24	MMI	CHAR GEN	62- 15
104	6072	6072J24	MMI	CHAR GEN	62- 23
105	6086	6086J24	MMI	SPECIAL	88- 31
106	6087	6087J24	MMI	SPECIAL	88- 32
107	6104	Z6104-2CS	ZIL	RAM	40-107
108	6104	Z6104-2PS	ZIL	RAM	40-108
109	6104	Z6104-3CS	ZIL	RAM	41- 25
110	6104	Z6104-3PS	ZIL	RAM	41- 26
111	6104	Z6104-4CS	ZIL	RAM	41- 48
112	6104	Z6104-4PS	ZIL	RAM	41- 49
113	6104	Z6104L-4CS	ZIL	RAM	41- 50
114	6104	Z6104L-4PS	ZIL	RAM	41- 51
115	6114	Z6114-2CS	ZIL	RAM	33-103
116	6114	Z6114-2PS	ZIL	RAM	33-104
117	6114	Z6114-3CS	ZIL	RAM	34- 59
118	6114	Z6114-3PS	ZIL	RAM	34- 60
119	6114	Z6114-4CS	ZIL	RAM	34- 88
120	6114	Z6114-4PS	ZIL	RAM	34- 89
121	6114	Z6114-5CS	ZIL	RAM	35- 52
122	6114	Z6114-5PS	ZIL	RAM	35- 53
123	6114	Z6114-6CS	ZIL	RAM	35- 62
124	6114	Z6114-6PS	ZIL	RAM	35- 63
125	6116	HM6116LP-2	HITJ	RAM	38- 2
126	6116	HM6116LP-3	HITJ	RAM	38- 6
127	6116	HM6116LP-4	HITJ	RAM	38- 10
128	6116	HM6116P-2	HITJ	RAM	38- 3
129	6116	HM6116P-3	HITJ	RAM	38- 7
130	6116	HM6116P-4	HITJ	RAM	38- 11
131	6132	Z6132-3CS	ZIL	RAM	43- 19
132	6132	Z6132-3PS	ZIL	RAM	43- 20
133	6132	Z6132-4CS	ZIL	RAM	43- 21
134	6132	Z6132-4PS	ZIL	RAM	43- 22
135	6132	Z6132-5CS	ZIL	RAM	43- 23
136	6132	Z6132-5PS	ZIL	RAM	43- 24
137	6142	Z6142-2CS	ZIL	RAM	33-105
138	6142	Z6142-2PS	ZIL	RAM	33-106
139	6142	Z6142-3CS	ZIL	RAM	34- 61
140	6142	Z6142-3PS	ZIL	RAM	34- 62
141	6142	Z6142-4CS	ZIL	RAM	34- 90
142	6142	Z6142-4PS	ZIL	RAM	34- 91
143	6142	Z6142-5CS	ZIL	RAM	35- 54
144	6142	Z6142-5PS	ZIL	RAM	35- 55
145	6142	Z6142-6CS	ZIL	RAM	35- 64
146	6142	Z6142-6PS	ZIL	RAM	35- 65
147	6147	HM6147-3	HITJ	RAM	40- 45
148	6147	HM6147LP	HITJ	RAM	40- 53
149	6147	HM6147LP-3	HITJ	RAM	40- 66
150	6147	HM6147P	HITJ	RAM	40- 54
151	6147	HM6147P-3	HITJ	RAM	40- 67
152	6148	HM6148LP	HITJ	RAM	33- 52
153	6148	HM6148LP-3	HITJ	RAM	33- 1
154	6148	HM6148LP-6	HITJ	RAM	33- 53
155	6148	HM6148P	HITJ	RAM	33- 3
156	6148	HM6148P-3	HITJ	RAM	33- 2
157	6148	HM6148P-6	HITJ	RAM	33- 54
158	6155	6155J18	MMI	CHAR GEN	62- 13
159	6156	6156J24	MMI	CHAR GEN	62- 14
160	6161	6161J24	MMI	CHAR GEN	62- 19
161	6162	6162J24	MMI	CHAR GEN	62- 20
162	6171	6171J24	MMI	CHAR GEN	62- 16
163	6172	6172J24	MMI	CHAR GEN	62- 24
164	6252	6252-1J	MMI	ROM	53- 20
165	6252	6252-1N	MMI	ROM	53- 21
166	6253	6253-1F	MMI	ROM	53- 22
167	6253	6253-1J	MMI	ROM	53- 23
168	6253	6253-1N	MMI	ROM	53- 24
169	6255	6255-1F	MMI	ROM	56- 54
170	6290	6290J24	MMI	CHAR GEN	63- 2
171	6291	6291J24	MMI	CHAR GEN	63- 5
172	6292	6292J24	MMI	CHAR GEN	63- 6
173	6293	6293J24	MMI	CHAR GEN	63- 7
174	6308	6308-1J	MMI	ROM	49- 36
175	6309	6309-1J	MMI	ROM	49- 38
176	6312	IM6312ACDN	INL	ROM	56- 59
177	6312	IM6312AIDN	INL	ROM	56- 64
178	6312	IM6312AIJN	INL	ROM	56- 60
179	6312	IM6312AMDN	INL	ROM	56- 62
180	6312	IM6312CDN	INL	ROM	56- 65
181	6312	IM6312CFN	INL	ROM	56- 66
182	6312	IM6312CJN	INL	ROM	56- 67
183	6312	IM6312IDN	INL	ROM	56- 68
184	6312	IM6312IFN	INL	ROM	56- 61
185	6312	IM6312IJN	INL	ROM	56- 69
186	6312	IM6312MDN	INL	ROM	56- 70
187	6312	IM6312MFN	INL	ROM	56- 63
188	6312	IM6312MJN	INL	ROM	56- 71
189	6316	IM6316IDG	INL	ROM	59- 25
190	6316	IM6316IJG	INL	ROM	59- 26
191	6316	IM6316MDG	INL	ROM	59- 27
192	6316	IM6316MJG	INL	ROM	59- 28
193	6322	HM6322-2	HAS	ROM	56- 75
194	6322	HM6322-9	HAS	ROM	56- 76
195	6322	HM6322A2	HAS	ROM	56- 72
196	6322	HM6322A9	HAS	ROM	56- 73
197	6322	HM6322C9	HAS	ROM	56- 74
198	6330	6330-1J	MMI	ROM	46- 57
199	6331	6331-1J	MMI	ROM	46- 59
200	6351	6351-1J	MMI	ROM	53- 49
201	6352	6352-1J	MMI	ROM	53- 51
202	6353	6353-1J	MMI	ROM	53- 53
203	6364	IM6364MJG	INL	ROM	60- 50
204	6400	CM6400-3C	STX	ROM	60- 51
205	6400	CM6400-3P	STX	ROM	60- 52
206	6501	HM6501-2	HAS	RAM	24- 71
207	6501	HM6501-5	HAS	RAM	24- 72
208	6501	HM6501-9	HAS	RAM	24- 73
209	6501	HM6501B2	HAS	RAM	24- 74
210	6501	HM6501B9	HAS	RAM	24- 75
211	6503	HM6503-5	HAS	RAM	37- 93
212	6503	HM6503-9	HAS	RAM	37- 94
213	6504	NMC6504J-2	NSC	RAM	40- 29
214	6504	NMC6504J-5	NSC	RAM	40- 36
215	6504	NMC6504J-9	NSC	RAM	40- 30
216	6504	NMC6504N-5	NSC	RAM	40- 37
217	6504	NMC6504N-9	NSC	RAM	40- 31
218	6504	HM6504-2	HAS	RAM	40- 6
219	6504	HM6504-5	HAS	RAM	40- 7
220	6504	HM6504-9	HAS	RAM	40- 8

SYMBOLS AND CODES EXPLAINED IN INTERPRETER

GENERIC PRODUCT INDEX

IN ORDER OF: (1)GENERIC NO. (2)MFR TYPE NO.

LINE No.	1 GENERIC NO.	2 MANUFACTURER TYPE NO.	MFR. CODE	PRODUCT CLASS	PAGE & LINE
1	6504	HM6504B2	HAS	RAM	40- 9
2	6504	HM6504B9	HAS	RAM	40- 10
3	6504	IM6504IDN	INL	RAM	40- 18
4	6504	IM6504IJN	INL	RAM	40- 19
5	6504	IM6504IPN	INL	RAM	40- 20
6	6504	IM6504MDN	INL	RAM	40- 21
7	6504	IM6504MFN	INL	RAM	40- 22
8	6504	IM6504MJN	INL	RAM	40- 23
9	6504	S6504	AMI	RAM	43- 18
10	6505	HM6505-2	HAS	RAM	40- 11
11	6505	HM6505-5	HAS	RAM	40- 12
12	6505	HM6505-9	HAS	RAM	40- 13
13	6508	NMC6508BJ-2	NSC	RAM	29- 59
14	6508	NMC6508BJ-9	NSC	RAM	29- 60
15	6508	NMC6508BN-9	NSC	RAM	29- 61
16	6508	NMC6508J-2	NSC	RAM	29- 70
17	6508	NMC6508J-5	NSC	RAM	29- 95
18	6508	NMC6508J-9	NSC	RAM	29- 71
19	6508	NMC6508N-5	NSC	RAM	29- 96
20	6508	NMC6508N-9	NSC	RAM	29- 72
21	6508	HM6508-2	HAS	RAM	29- 31
22	6508	HM6508-5	HAS	RAM	29- 32
23	6508	HM6508-9	HAS	RAM	29- 33
24	6508	IM6508IDE	INL	RAM	30- 5
25	6508	MBC6508A	AMI	RAM	30- 43
26	6508	S6508	AMI	RAM	30- 75
27	6508	S6508-1	AMI	RAM	30- 72
28	6508	S6508A1	AMI	RAM	31- 8
29	6508	S6508A	AMI	RAM	30- 76
30	6508	MCM6508C-25	MOTA	RAM	29- 22
31	6508	MCM6508C-30	MOTA	RAM	29- 24
32	6508	MCM6508C-46	MOTA	RAM	29- 28
33	6508	MCM6508P-25	MOTA	RAM	29- 23
34	6508	MCM6508P-30	MOTA	RAM	29- 27
35	6508	MCM6508P-46	MOTA	RAM	29- 29
36	6511	HM6511-2	HAS	RAM	21- 70
37	6511	HM6511-9	HAS	RAM	21- 71
38	6511	HM6511C9	HAS	RAM	21- 72
39	6512	HM6512-2	HAS	RAM	21- 73
40	6512	HM6512-9	HAS	RAM	21- 74
41	6512	HM6512C9	HAS	RAM	21- 75
42	6512	IM6512A-IDN	INL	RAM	21- 76
43	6512	IM6512A-IJN	INL	RAM	21- 77
44	6512	IM6512A-MDN	INL	RAM	21- 78
45	6512	IM6512A-MFN	INL	RAM	21- 79
46	6512	IM6512A-MJN	INL	RAM	21- 80
47	6512	IM6512CJN	INL	RAM	21- 86
48	6512	IM6512IDN	INL	RAM	21- 81
49	6512	IM6512IJN	INL	RAM	21- 82
50	6512	IM6512MDN	INL	RAM	21- 83
51	6512	IM6512MFN	INL	RAM	21- 84
52	6512	IM6512MJN	INL	RAM	21- 85
53	6513	HM6513-5	HAS	RAM	27- 87
54	6513	HM6513-9	HAS	RAM	27- 88
55	6514	NMC6514J-2	NSC	RAM	33- 18
56	6514	NMC6514J-5	NSC	RAM	33- 28
57	6514	NMC6514J-9	NSC	RAM	33- 19
58	6514	NMC6514N-5	NSC	RAM	33- 29
59	6514	NMC6514N-9	NSC	RAM	33- 20
60	6514	HM6514-2	HAS	RAM	32-103
61	6514	HM6514-5	HAS	RAM	32-104
62	6514	HM6514-9	HAS	RAM	32-105
63	6514	HM6514B2	HAS	RAM	32-106
64	6514	HM6514B9	HAS	RAM	32-107
65	6514	IM6514CJN	INL	RAM	33- 4
66	6514	IM6514CPN	INL	RAM	33- 5
67	6514	IM6514IDN	INL	RAM	33- 6
68	6514	IM6514IJN	INL	RAM	33- 7
69	6514	IM6514IPN	INL	RAM	33- 8
70	6514	IM6514MDN	INL	RAM	33- 9
71	6514	IM6514MFN	INL	RAM	33- 10
72	6514	IM6514MJN	INL	RAM	33- 11
73	6514	S6514	AMI	RAM	33- 58
74	6514	uPD6514C	NECM	RAM	34- 58
75	6514	uPD6514C-1	NECM	RAM	34- 87
76	6514	uPD6514C-2	NECM	RAM	35- 49
77	6514	uPD6514C-3	NECM	RAM	36- 19
78	6518	NMC6518AJ-9	NSC	RAM	29- 62
79	6518	NMC6518BJ-2	NSC	RAM	29- 63
80	6518	NMC6518BJ-9	NSC	RAM	29- 64
81	6518	NMC6518BN-9	NSC	RAM	29- 65
82	6518	NMC6518J-2	NSC	RAM	29- 73
83	6518	NMC6518J-5	NSC	RAM	29- 97
84	6518	NMC6518J-9	NSC	RAM	29- 74
85	6518	NMC6518N-5	NSC	RAM	29- 98
86	6518	NMC6518N-9	NSC	RAM	29- 75
87	6518	HM6518-2	HAS	RAM	29- 34
88	6518	HM6518-5	HAS	RAM	29- 35
89	6518	HM6518-9	HAS	RAM	29- 36
90	6518	HM6518B2	HAS	RAM	29- 37
91	6518	HM6518B9	HAS	RAM	29- 38
92	6518	IM6518-1ID	INL	RAM	29- 84
93	6518	IM6518-1IJ	INL	RAM	29- 85
94	6518	IM6518-1MD	INL	RAM	29- 86
95	6518	IM6518-1MF	INL	RAM	29- 87
96	6518	IM6518-1MJ	INL	RAM	29- 88
97	6518	IM6518A-1ID	INL	RAM	29- 44
98	6518	IM6518A-1IJ	INL	RAM	29- 45
99	6518	IM6518A-1MD	INL	RAM	29- 46
100	6518	IM6518A-1MF	INL	RAM	29- 47
101	6518	IM6518A-1MS	INL	RAM	29- 48
102	6518	IM6518AID	INL	RAM	29- 54
103	6518	IM6518AIJ	INL	RAM	29- 55
104	6518	IM6518AMD	INL	RAM	29- 56
105	6518	IM6518AMF	INL	RAM	29- 57
106	6518	IM6518AMJ	INL	RAM	29- 58
107	6518	IM6518CJ	INL	RAM	30- 19
108	6518	IM6518CP	INL	RAM	30- 20
109	6518	IM6518ID	INL	RAM	30- 6
110	6518	IM6518IJ	INL	RAM	30- 7
111	6518	IM6518IP	INL	RAM	30- 8
112	6518	IM6518MD	INL	RAM	30- 9
113	6518	IM6518MF	INL	RAM	30- 10
114	6518	IM6518MJ	INL	RAM	30- 11
115	6518	MCM6518C-25	MOTA	RAM	29- 20
116	6518	MCM6518C-30	MOTA	RAM	29- 25
117	6518	MCM6518P-25	MOTA	RAM	29- 21
118	6518	MCM6518P-30	MOTA	RAM	29- 26
119	6518	MCM6518P-46	MOTA	RAM	29- 30
120	6523	IM6523IDE	INL	RAM	23- 85
121	6523	IM6523MPE	INL	RAM	23- 86
122	6533	HM6533-2	HAS	RAM	32-108
123	6533	HM6533-9	HAS	RAM	32-109
124	6533	HM6533C9	HAS	RAM	32-110
125	6543	HM6543-2	HAS	RAM	40- 14
126	6543	HM6543-9	HAS	RAM	40- 15
127	6543	HM6543C9	HAS	RAM	40- 16
128	6548	UC6548#1	SOD	ROM	56- 80
129	6548	UC6548#2	SOD	ROM	53- 8
130	6548	UC6548#3	SOD	ROM	51- 3
131	6548	UC6548#4	SOD	ROM	49- 64
132	6551	NMC6551BJ-2	NSC	RAM	24- 99
133	6551	NMC6551BJ-9	NSC	RAM	24-100
134	6551	NMC6551BN-9	NSC	RAM	24-101
135	6551	NMC6551J-2	NSC	RAM	25- 6
136	6551	NMC6551J-5	NSC	RAM	25- 14
137	6551	NMC6551J-9	NSC	RAM	25- 7
138	6551	NMC6551N-5	NSC	RAM	25- 15
139	6551	NMC6551N-9	NSC	RAM	25- 8
140	6551	HM6551-2	HAS	RAM	24- 76
141	6551	HM6551-5	HAS	RAM	24- 77
142	6551	HM6551-9	HAS	RAM	24- 78
143	6551	HM6551B2	HAS	RAM	24- 79
144	6551	HM6551B9	HAS	RAM	24- 80
145	6551	IM6551AIDF	INL	RAM	24- 91
146	6551	IM6551AIJF	INL	RAM	24- 92
147	6551	IM6551AMDF	INL	RAM	24- 93
148	6551	IM6551AMJF	INL	RAM	24- 94
149	6551	IM6551CJF	INL	RAM	25- 30
150	6551	IM6551CPF	INL	RAM	25- 31
151	6551	IM6551IDF	INL	RAM	25- 18
152	6551	IM6551IJF	INL	RAM	25- 19
153	6551	IM6551IPF	INL	RAM	25- 20
154	6551	IM6551MJF	INL	RAM	25- 21
155	6551	IM6551MPF	INL	RAM	25- 22
156	6552	NMC6552BJ-2	NSC	RAM	24-102
157	6552	NMC6552BJ-9	NSC	RAM	24-103
158	6552	NMC6552BN-9	NSC	RAM	24-104
159	6552	NMC6552J-2	NSC	RAM	25- 9
160	6552	NMC6552J-5	NSC	RAM	25- 16
161	6552	NMC6552J-9	NSC	RAM	25- 10
162	6552	NMC6552N-5	NSC	RAM	25- 17
163	6552	NMC6552N-9	NSC	RAM	25- 11
164	6560	NC6560L#2	NIT	ROM	56- 94
165	6560	NCM6560AL	NIT	ROM	54-102
166	6560	NCM6560AP	NIT	ROM	54-103
167	6560	NCM6560BL	NIT	ROM	56- 97
168	6560	NCM6560BP	NIT	ROM	56- 98
169	6560	MCM6560L#1	MOTA	ROM	54-100
170	6560	MCM6560L#2	MOTA	ROM	56- 95
171	6560	MCM6560P#1	MOTA	ROM	54-101
172	6560	MCM6560P#2	MOTA	ROM	56- 96
173	6561	NC6561L#6	NIT	CODE CONV	64- 8
174	6561	NCM6561L#1	NIT	CODE CONV	64- 29
175	6561	NCM6561L#2	NIT	CODE CONV	64- 15
176	6561	NCM6561L#3	NIT	CODE CONV	64- 1
177	6561	NCM6561L#4	NIT	CODE CONV	64- 60
178	6561	NCM6561L#6	NIT	CODE CONV	64- 45
179	6561	NCM6561P#1	NIT	CODE CONV	64- 30
180	6561	NCM6561P#2	NIT	CODE CONV	64- 16
181	6561	NCM6561P#3	NIT	CODE CONV	64- 2
182	6561	NCM6561P#5	NIT	CODE CONV	64- 81
183	6561	HM6561-2	HAS	RAM	24- 81
184	6561	HM6561-5	HAS	RAM	24- 82
185	6561	HM6561-9	HAS	RAM	24- 83
186	6561	HM6561B2	HAS	RAM	24- 84
187	6561	HM6561B9	HAS	RAM	24- 85
188	6561	IM6561AIDN	INL	RAM	24- 95
189	6561	IM6561AIJN	INL	RAM	24- 96
190	6561	IM6561AMDN	INL	RAM	24- 97
191	6561	IM6561AMJN	INL	RAM	24- 98
192	6561	IM6561CDN	INL	RAM	25- 32
193	6561	IM6561CJN	INL	RAM	25- 33
194	6561	IM6561CPN	INL	RAM	25- 34
195	6561	IM6561IDN	INL	RAM	25- 23
196	6561	IM6561IJN	INL	RAM	25- 24
197	6561	IM6561IPN	INL	RAM	25- 25
198	6561	IM6561MJF	INL	RAM	25- 26
199	6561	IM6561MPF	INL	RAM	25- 27
200	6561	MCM6561L#1	MOTA	CODE CONV	64- 61
201	6561	MCM6561L#2	MOTA	CODE CONV	64- 17
202	6561	MCM6561L#3	MOTA	CODE CONV	64- 82
203	6561	MCM6561L#4	MOTA	CODE CONV	64- 34
204	6561	MCM6561L#5	MOTA	CODE CONV	64- 46
205	6561	MCM6561L#6	MOTA	CODE CONV	64- 4
206	6561	MCM6561P#1	MOTA	CODE CONV	64- 62
207	6561	MCM6561P#2	MOTA	CODE CONV	64- 18
208	6561	MCM6561P#3	MOTA	CODE CONV	64- 83
209	6561	MCM6561P#4	MOTA	CODE CONV	64- 35
210	6561	MCM6561P#5	MOTA	CODE CONV	64- 47
211	6561	MCM6561P#6	MOTA	CODE CONV	64- 5
212	6562	HM6562-2	HAS	RAM	24- 86
213	6562	HM6562-5	HAS	RAM	24- 87
214	6562	HM6562-9	HAS	RAM	24- 88
215	6562	HM6562B2	HAS	RAM	24- 89
216	6562	HM6562B9	HAS	RAM	24- 90
217	6562	MCM6562L#1	MOTA	CODE CONV	64- 63
218	6562	MCM6562L#2	MOTA	CODE CONV	64- 19
219	6562	MCM6562L#3	MOTA	CODE CONV	64- 84
220	6562	MCM6562L#4	MOTA	CODE CONV	64- 36

SYMBOLS AND CODES EXPLAINED IN INTERPRETER

GENERIC PRODUCT INDEX

IN ORDER OF: (1)GENERIC NO. (2)MFR TYPE NO.

LINE No.	[1] GENERIC NO.	[2] MANUFACTURER TYPE NO.	MFR. CODE	PRODUCT CLASS	PAGE & LINE
1	6562	MCM6562L#5	MOTA	CODE CONV	64- 48
2	6562	MCM6562L#6	MOTA	CODE CONV	64- 6
3	6562	MCM6562P#1	MOTA	CODE CONV	64- 64
4	6562	MCM6562P#2	MOTA	CODE CONV	64- 20
5	6562	MCM6562P#3	MOTA	CODE CONV	64- 85
6	6562	MCM6562P#4	MOTA	CODE CONV	64- 37
7	6562	MCM6562P#5	MOTA	CODE CONV	64- 49
8	6562	MCM6562P#6	MOTA	CODE CONV	64- 7
9	6564	HM6564-2	HAS	RAM	43- 33
10	6564	HM6564-5	HAS	RAM	43- 34
11	6564	HM6564-9	HAS	RAM	43- 35
12	6570	NC6570L	NIT	CHAR GEN	63- 26
13	6571	NC6571L	NIT	CHAR GEN	62- 65
14	6571	NCM6571L	NIT	CHAR GEN	63- 48
15	6571	NCM6571P	NIT	CHAR GEN	63- 49
16	6572	NC6572L	NIT	CHAR GEN	62- 66
17	6572	NCM6572L	NIT	CHAR GEN	63- 50
18	6572	UC6572	SOD	ROM	49- 72
19	6573	NC6573L	NIT	CHAR GEN	62- 67
20	6573	NCM6573L	NIT	CHAR GEN	63- 51
21	6573	NCM6573P	NIT	CHAR GEN	63- 52
22	6574	NC6574L	NIT	CHAR GEN	62- 68
23	6574	NCM6574L	NIT	CHAR GEN	63- 53
24	6574	NCM6574P	NIT	CHAR GEN	63- 54
25	6575	NC6575L	NIT	CHAR GEN	62- 69
26	6575	NCM6575L	NIT	CHAR GEN	63- 55
27	6575	NCM6575P	NIT	CHAR GEN	63- 56
28	6576	NC6576L	NIT	CHAR GEN	62- 70
29	6576	NCM6576L	NIT	CHAR GEN	63- 57
30	6576	NCM6576P	NIT	CHAR GEN	63- 58
31	6580	NC6580L	NIT	CHAR GEN	63- 14
32	6580	NCM6580L	NIT	CHAR GEN	63- 46
33	6580	NCM6580P	NIT	CHAR GEN	63- 47
34	6580	MCM6580L	MOTA	CHAR GEN	63- 15
35	6580	MCM6580P	MOTA	CHAR GEN	63- 16
36	6581	NC6581L	NIT	CHAR GEN	62- 36
37	6581	NCM6581L	NIT	CHAR GEN	62- 38
38	6581	NCM6581P	NIT	CHAR GEN	62- 39
39	6581	MCM6581L	MOTA	CHAR GEN	62- 40
40	6581	MCM6581P	MOTA	CHAR GEN	62- 41
41	6583	NC6583L	NIT	CHAR GEN	62- 37
42	6583	NCM6583L	NIT	CHAR GEN	62-102
43	6583	NCM6583P	NIT	CHAR GEN	62-103
44	6583	MCM6583L	MOTA	CHAR GEN	62- 42
45	6583	MCM6583P	MOTA	CHAR GEN	62- 43
46	6590	NC6590L	NIT	ROM	57- 99
47	6590	MCM6590L	MOTA	ROM	58- 38
48	6591	NC6591#1	NIT	CODE CONV	64- 66
49	6591	NC6591#2	NIT	CODE CONV	64- 22
50	6591	NC6591#3	NIT	CODE CONV	64- 92
51	6591	NC6591#4	NIT	CODE CONV	64- 39
52	6591	NC6591#5	NIT	CODE CONV	64- 57
53	6591	NC6591#6	NIT	CODE CONV	64- 10
54	6591	MCM6591L#1	MOTA	CODE CONV	64- 21
55	6591	MCM6591L#2	MOTA	CODE CONV	64- 65
56	6591	MCM6591L#3	MOTA	CODE CONV	64- 9
57	6591	MCM6591L#4	MOTA	CODE CONV	64- 38
58	6591	MCM6591L#5	MOTA	CODE CONV	64- 44
59	6591	MCM6591L#6	MOTA	CODE CONV	64- 80
60	6604	MCM6604AC2	MOTA	RAM	39- 27
61	6604	MCM6604AC4	MOTA	RAM	39- 45
62	6604	MCM6604AC	MOTA	RAM	39- 56
63	6604	MCM6604AL2	MOTA	RAM	39- 28
64	6604	MCM6604AL4	MOTA	RAM	39- 46
65	6604	MCM6604AL	MOTA	RAM	39- 57
66	6604	MCM6604L2	MOTA	RAM	38- 49
67	6604	MCM6604L4	MOTA	RAM	38- 50
68	6604	MCM6604L	MOTA	RAM	38- 51
69	6604	MCM6604P2	MOTA	RAM	38- 52
70	6604	MCM6604P4	MOTA	RAM	38- 53
71	6604	MCM6604P	MOTA	RAM	38- 54
72	6605	MCM6605AL1	MOTA	RAM	38- 75
73	6605	MCM6605AL2	MOTA	RAM	38-104
74	6605	MCM6605AL	MOTA	RAM	39- 47
75	6605	MCM6605AP1	MOTA	RAM	38- 76
76	6605	MCM6605AP2	MOTA	RAM	38-105
77	6605	MCM6605AP	MOTA	RAM	39- 48
78	6611	HM1-6611A-9	HAS	ROM	46- 1
79	6611	HM6611-2	HAS	ROM	48- 92
80	6611	HM6611-5	HAS	ROM	49- 1
81	6611	HM6611-9	HAS	ROM	48- 93
82	6611	HM6611A2	HAS	ROM	48- 88
83	6611	HM6611A9	HAS	ROM	48- 89
84	6616	MCM6616L3	MOTA	RAM	43- 41
85	6616	MCM6616L4	MOTA	RAM	43- 42
86	6616	MCM6616L5	MOTA	RAM	43- 43
87	6616	MCM6616L20	MOTA	RAM	44- 98
88	6616	MCM6616L25	MOTA	RAM	44-107
89	6616	MCM6616L30	MOTA	RAM	45- 7
90	6616	MCM6616P3	MOTA	RAM	43- 44
91	6616	MCM6616P4	MOTA	RAM	43- 45
92	6616	MCM6616P5	MOTA	RAM	43- 46
93	6616	MCM6616P20	MOTA	RAM	44- 99
94	6616	MCM6616P25	MOTA	RAM	44-108
95	6616	MCM6616P30	MOTA	RAM	45- 8
96	6630	MCM6630L15	MOTA	RAM	45- 14
97	6630	MCM6630L20	MOTA	RAM	45- 18
98	6631	MCM6631L15	MOTA	RAM	45- 15
99	6631	MCM6631L20	MOTA	RAM	45- 19
100	6633	MCM6633L15	MOTA	RAM	45- 16
101	6633	MCM6633L20	MOTA	RAM	45- 20
102	6641	HM6641-2	HAS	ROM	52- 85
103	6641	HM6641-5	HAS	ROM	52- 86
104	6641	HM6641-9	HAS	ROM	52- 87
105	6641	MCM6641-20C	MOTA	RAM	41- 8
106	6641	MCM6641-20JL	MOTA	RAM	41- 9
107	6641	MCM6641-20NL	MOTA	RAM	41- 10
108	6641	MCM6641-20P	MOTA	RAM	41- 11
109	6641	MCM6641-25C	MOTA	RAM	41- 34
110	6641	MCM6641-25JL	MOTA	RAM	41- 35
111	6641	MCM6641-25NL	MOTA	RAM	41- 36
112	6641	MCM6641-25P	MOTA	RAM	41- 37
113	6641	MCM6641-30C	MOTA	RAM	41- 58
114	6641	MCM6641-30JL	MOTA	RAM	41- 59
115	6641	MCM6641-30NL	MOTA	RAM	41- 60
116	6641	MCM6641-30P	MOTA	RAM	41- 61
117	6641	MCM6641-45C	MOTA	RAM	41- 91
118	6641	MCM6641-45JL	MOTA	RAM	41- 92
119	6641	MCM6641-45NL	MOTA	RAM	41- 93
120	6641	MCM6641-45P	MOTA	RAM	41- 94
121	6653	IM6653AIDG	INL	ROM	53- 90
122	6653	IM6653AIJG	INL	ROM	53- 91
123	6653	IM6653AMJG	INL	ROM	53- 94
124	6653	IM6653IDG	INL	ROM	53- 92
125	6653	IM6653IJG	INL	ROM	53- 93
126	6653	IM6653MDG	INL	ROM	53- 95
127	6653	IM6653MJG	INL	ROM	53- 96
128	6654	IM6654AIDG	INL	ROM	52- 88
129	6654	IM6654AIJG	INL	ROM	52- 89
130	6654	IM6654AMJG	INL	ROM	52- 93
131	6654	IM6654IDG	INL	ROM	52- 91
132	6654	IM6654IJG	INL	ROM	52- 92
133	6654	IM6654MDG	INL	ROM	52- 94
134	6654	IM6654MJG	INL	ROM	52- 95
135	6661	HM6661-2	HAS	ROM	48- 90
136	6661	HM6661-5	HAS	ROM	48- 94
137	6661	HM6661-9	HAS	ROM	48- 91
138	6661	HM6661A2	HAS	ROM	48- 86
139	6661	HM6661A9	HAS	ROM	48- 87
140	6664	MCM6664-15C	MOTA	RAM	45- 29
141	6664	MCM6664-15L	MOTA	RAM	45- 30
142	6664	MCM6664-20C	MOTA	RAM	45- 31
143	6664	MCM6664-20L	MOTA	RAM	45- 32
144	6665	MCM6665-15L	MOTA	RAM	45- 38
145	6665	MCM6665-20L	MOTA	RAM	45- 48
146	6665	MCM6665L25-5L	MOTA	RAM	45- 54
147	6670	MCM6670L	MOTA	CHAR GEN	63- 22
148	6670	MCM6670P	MOTA	CHAR GEN	63- 23
149	6674	MCM6674L	MOTA	CHAR GEN	62- 59
150	6674	MCM6674P	MOTA	CHAR GEN	62- 60
151	6810	EF6810C	THCF	RAM	22- 26
152	6810	EF6810CMB	THCF	RAM	22- 27
153	6810	EF6810CP	THCF	RAM	22- 28
154	6810	EF6810CV	THCF	RAM	22- 29
155	6810	EF6810P	THCF	RAM	22- 30
156	6810	MCM6810ACL1	MOTA	RAM	22- 5
157	6810	MCM6810ACL	MOTA	RAM	22- 6
158	6810	MCM6810AL1	MOTA	RAM	22- 7
159	6810	MCM6810AL	MOTA	RAM	22- 8
160	6810	MCM6810AP1	MOTA	RAM	22- 9
161	6810	MCM6810AP	MOTA	RAM	22- 10
162	6810	MCM6810BJCS	MOTA	RAM	22- 33
163	6810	MCM6810CJCS	MOTA	RAM	22- 11
164	6810	MCM6810CL	MOTA	RAM	22- 34
165	6810	MCM6810CP	MOTA	RAM	22- 35
166	6810	MCM6810L	MOTA	RAM	22- 36
167	6810	MCM6810P	MOTA	RAM	22- 37
168	6830	MCM6830AL	MOTA	ROM	54- 95
169	6831	MBC6831B	AMI	ROM	57- 59
170	6831	S6831B	AMI	ROM	58- 11
171	6832	MCM6832C	MOTA	ROM	58- 32
172	6832	MCM6832P	MOTA	ROM	58- 33
173	7004	CRT7004A	SMC	CHAR GEN	62- 97
174	7004	CRT7004B	SMC	CHAR GEN	62- 98
175	7004	CRT7004C	SMC	CHAR GEN	62- 99
176	7027	IM7027-1CJE	INL	RAM	38- 55
177	7027	IM7027-2CJE	INL	RAM	38- 65
178	7027	IM7027-2CTE	INL	RAM	38- 66
179	7027	IM7027-3CJE	INL	RAM	38- 93
180	7027	IM7027-3CTE	INL	RAM	38- 94
181	7027	IM7027-4CJE	INL	RAM	39- 15
182	7033	NC7033L	NIT	SPECIAL	88- 34
183	7033	NC7033P	NIT	SPECIAL	88- 35
184	7051	NC7051	NIT	ROM	46-107
185	7053	NC7053L	NIT	ROM	47- 34
186	7053	NC7053M	NIT	ROM	47- 35
187	7053	NC7053P	NIT	ROM	47- 36
188	7055	NC7055	NIT	ROM	47- 26
189	7072	MB7072E	FMI	RAM	24- 33
190	7072	MB7072N	FMI	RAM	24- 39
191	7110	7110	ITL	SPECIAL	87- 10
192	7110	7110-1	ITL	SPECIAL	87- 11
193	7110	7110-2	ITL	SPECIAL	87- 12
194	7110	7110-3	ITL	SPECIAL	87- 13
195	7114	IM7114CPN	INL	RAM	32- 98
196	7114	IM7114L2CJN	INL	RAM	32- 93
197	7114	IM7114L3CJN	INL	RAM	32- 95
198	7114	IM7114LCJN	INL	RAM	32- 99
199	7122	MB7122E	FMI	ROM	53- 42
200	7128	MB7128E	FMI	ROM	56-105
201	7132	MB7132E	FMI	ROM	56-106
202	7138	MB7138E	FMI	ROM	58- 60
203	7141	IM7141-2CJN	INL	RAM	39- 76
204	7141	IM7141-2CPN	INL	RAM	42- 28
205	7141	IM7141-2MJN	INL	RAM	39- 77
206	7141	IM7141-2MJN/B	INL	RAM	39- 78
207	7141	IM7141-3CJN	INL	RAM	39- 81
208	7141	IM7141-3CPN	INL	RAM	42- 75
209	7141	IM7141-3MJN	INL	RAM	39- 82
210	7141	IM7141-3MJN/B	INL	RAM	39- 83
211	7141	IM7141CJN	INL	RAM	39- 86
212	7141	IM7141L2CJN	INL	RAM	39- 79
213	7141	IM7141L2CPN	INL	RAM	39- 80
214	7141	IM7141L3CJN	INL	RAM	39- 84
215	7141	IM7141L3CPN	INL	RAM	39- 85
216	7141	IM7141LCJN	INL	RAM	39- 87
217	7141	IM7141MJN	INL	RAM	39- 88
218	7141	IM7141MJN/B	INL	RAM	39- 89
219	7147	IM7147-3CJN	INL	RAM	42- 3
220	7147	IM7147CJN	INL	RAM	42- 7

SYMBOLS AND CODES EXPLAINED IN INTERPRETER

GENERIC PRODUCT INDEX

IN ORDER OF: (1)GENERIC NO. (2)MFR TYPE NO.

LINE No.	[1] GENERIC NO.	[2] MANUFACTURER TYPE NO.	MFR. CODE	PRODUCT CLASS	PAGE & LINE
1	7147	IM7147L-3CJN	INL	RAM	42- 4
2	7147	IM7147LCJN	INL	RAM	42- 8
3	7147	IM7147LM-JN	INL	RAM	42- 11
4	7270	MC7270L	MOTA	SHIFT REG	68- 69
5	7270	MC7270P	MOTA	SHIFT REG	68- 70
6	7271	MC7271L	MOTA	SHIFT REG	68- 71
7	7271	MC7271P	MOTA	SHIFT REG	68- 72
8	7400	NC7400	NIT	ROM	47- 30
9	7451	NC7451	NIT	ROM	53- 98
10	7481	SN7481AJ	TII	RAM	19- 5
11	7481	SN7481AN	TII	RAM	19- 6
12	7481	T7481B1	SGAI	RAM	19- 30
13	7484	SN7484AJ	TII	RAM	19- 7
14	7484	SN7484AN	TII	RAM	19- 8
15	7484	T7484B1	SGAI	RAM	19- 31
16	7488	N7488B	MULB	ROM	46- 21
17	7488	N7488B	PHIN	ROM	46- 21
18	7488	N7488B	SIC	ROM	46- 21
19	7488	N7488W	MULB	ROM	46- 22
20	7488	N7488W	PHIN	ROM	46- 22
21	7488	N7488W	SIC	ROM	46- 22
22	7489	7489DC	FSC	RAM	20- 90
23	7489	7489FC	FSC	RAM	20- 91
24	7489	7489PC	FSC	RAM	20- 92
25	7489	N7489B	MULB	RAM	20- 84
26	7489	N7489B	PHIN	RAM	20- 84
27	7491	SN7491AJ	TII	SHIFT REG	82- 52
28	7491	SN7491AN	TII	SHIFT REG	82- 53
29	7491	uPB7491C	NECJ	SHIFT REG	82- 62
30	7491	7491ADC	FSC	SHIFT REG	82- 31
31	7491	7491AFC	FSC	SHIFT REG	82- 32
32	7491	7491APC	FSC	SHIFT REG	82- 33
33	7491	7491PC	TUNH	SHIFT REG	82- 13
34	7491	ZN7491AE	FERB	SHIFT REG	82- 56
35	7491	ZN7491AJ	FERB	SHIFT REG	82- 57
36	7491	N7491A	MULB	SHIFT REG	82- 37
37	7491	N7491A	PHIN	SHIFT REG	82- 37
38	7491	N7491A	SIC	SHIFT REG	82- 37
39	7491	N7491AF	PHIN	SHIFT REG	82- 38
40	7491	N7491AF	SIC	SHIFT REG	82- 38
41	7491	N7491AF	VALG	SHIFT REG	82- 38
42	7491	N7491AN	PHIN	SHIFT REG	82- 39
43	7491	N7491AN	SIC	SHIFT REG	82- 39
44	7491	N7491AN	VALG	SHIFT REG	82- 39
45	7491	N7491F	MULB	SHIFT REG	82- 40
46	7491	N7491F	PHIN	SHIFT REG	82- 40
47	7491	N7491F	SIC	SHIFT REG	82- 40
48	7494	SN7494J	TII	SHIFT REG	73- 41
49	7494	SN7494N	TII	SHIFT REG	73- 42
50	7494	MC7494L	MOTA	SHIFT REG	73- 33
51	7494	7494DC	FSC	SHIFT REG	73- 62
52	7494	7494FC	FSC	SHIFT REG	73- 63
53	7494	7494PC	FSC	SHIFT REG	73- 64
54	7494	7494PC	TUNH	SHIFT REG	73- 64
55	7494	ZN7494E	FERB	SHIFT REG	73- 45
56	7494	ZN7494J	FERB	SHIFT REG	73- 46
57	7494	N7494B	MULB	SHIFT REG	73- 34
58	7494	N7494B	PHIN	SHIFT REG	73- 34
59	7494	N7494B	SIC	SHIFT REG	73- 34
60	7494	N7494F	MULB	SHIFT REG	73- 35
61	7494	N7494F	PHIN	SHIFT REG	73- 35
62	7494	N7494F	SIC	SHIFT REG	73- 35
63	7494	N7494F	VALG	SHIFT REG	73- 35
64	7494	N7494N	PHIN	SHIFT REG	66- 82
65	7494	N7494N	SIC	SHIFT REG	66- 82
66	7494	N7494N	VALG	SHIFT REG	66- 82
67	7495	SN7495AJ	TII	SHIFT REG	70- 18
68	7495	SN7495AN	TII	SHIFT REG	70- 19
69	7495	MC7495L	MOTA	SHIFT REG	71- 95
70	7495	7495ADC	FSC	SHIFT REG	69- 50
71	7495	7495AFC	FSC	SHIFT REG	69- 51
72	7495	7495APC	FSC	SHIFT REG	69- 52
73	7495	7495APC	TUNH	SHIFT REG	69- 52
74	7495	ZN7495AE	FERB	SHIFT REG	70- 38
75	7495	ZN7495AJ	FERB	SHIFT REG	70- 39
76	7495	N7495A	MULB	SHIFT REG	65- 98
77	7495	N7495A	PHIN	SHIFT REG	65- 98
78	7495	N7495A	SIC	SHIFT REG	65- 98
79	7495	N7495AF	PHIN	SHIFT REG	69- 82
80	7495	N7495AF	SIC	SHIFT REG	69- 82
81	7495	N7495AN	PHIN	SHIFT REG	69- 83
82	7495	N7495AN	SIC	SHIFT REG	69- 83
83	7495	N7495F	MULB	SHIFT REG	71-110
84	7495	N7495F	PHIN	SHIFT REG	71-110
85	7495	N7495F	SIC	SHIFT REG	71-110
86	7496	SN7496J	TII	SHIFT REG	74- 90
87	7496	SN7496N	TII	SHIFT REG	74- 91
88	7496	MC7496L	MOTA	SHIFT REG	66- 81
89	7496	7496DC	FSC	SHIFT REG	74- 68
90	7496	7496FC	FSC	SHIFT REG	74- 69
91	7496	7496PC	FSC	SHIFT REG	74- 70
92	7496	7496PC	TUNH	SHIFT REG	74- 70
93	7496	ZN7496E	FERB	SHIFT REG	74- 94
94	7496	ZN7496J	FERB	SHIFT REG	74- 95
95	7496	N7496B	MULB	SHIFT REG	74- 76
96	7496	N7496B	PHIN	SHIFT REG	74- 76
97	7496	N7496B	SIC	SHIFT REG	74- 76
98	7496	N7496F	MULB	SHIFT REG	74- 50
99	7496	N7496F	PHIN	SHIFT REG	74- 50
100	7496	N7496F	SIC	SHIFT REG	74- 50
101	7496	N7496F	VALG	SHIFT REG	74- 50
102	7496	N7496N	PHIN	SHIFT REG	74- 77
103	7496	N7496N	SIC	SHIFT REG	74- 77
104	7496	N7496N	VALG	SHIFT REG	74- 77
105	7496	GFB7496D	MULB	SHIFT REG	75- 10
106	7523	UC7523#1	SOD	ROM	49- 29
107	7523	UC7523#2	SOD	ROM	50- 8
108	7548	UC7548#1	SOD	ROM	56- 81
109	7548	UC7548#2	SOD	ROM	53- 9
110	7548	UC7548#3	SOD	ROM	51- 4
111	7548	UC7548#4	SOD	ROM	49- 65
112	7572	UC7572	SOD	ROM	49- 73
113	7620	MCM7620DC	MOTA	ROM	50- 48
114	7620	MCM7620DM	MOTA	ROM	50- 70
115	7620	MCM7620LDC	MOTA	ROM	50- 13
116	7620	MCM7620LDM	MOTA	ROM	50- 15
117	7621	MCM7621DC	MOTA	ROM	50- 49
118	7621	MCM7621DM	MOTA	ROM	50- 71
119	7621	MCM7621LDC	MOTA	ROM	50- 14
120	7621	MCM7621LDM	MOTA	ROM	50- 16
121	7640	HM1-7640AR2	HAS	ROM	52- 41
122	7640	HM3-7640AR5	HAS	ROM	52- 2
123	7640	MCM7640D	MOTA	ROM	52- 43
124	7640	MCM7640DC	MOTA	ROM	52- 44
125	7640	MCM7640DM	MOTA	ROM	52- 60
126	7640	MCM7640L	MOTA	ROM	51- 99
127	7640	MCM7640P	MOTA	ROM	51-100
128	7641	HM3-7641AR5	HAS	ROM	52- 3
129	7641	HM9-7641AR2	HAS	ROM	52- 42
130	7641	HM9-7641AR5	HAS	ROM	52- 4
131	7641	MCM7641D	MOTA	ROM	52- 45
132	7641	MCM7641DC	MOTA	ROM	52- 46
133	7641	MCM7641DM	MOTA	ROM	52- 61
134	7641	MCM7641L	MOTA	ROM	51-101
135	7641	MCM7641P	MOTA	ROM	51-102
136	7642	MCM7642D	MOTA	ROM	53- 63
137	7642	MCM7642DC	MOTA	ROM	53- 64
138	7642	MCM7642DM	MOTA	ROM	53- 77
139	7642	MCM7642L	MOTA	ROM	53- 36
140	7642	MCM7642P	MOTA	ROM	53- 37
141	7643	MCM7643D	MOTA	ROM	53- 65
142	7643	MCM7643DC	MOTA	ROM	53- 66
143	7643	MCM7643DM	MOTA	ROM	53- 78
144	7643	MCM7643L	MOTA	ROM	53- 38
145	7643	MCM7643P	MOTA	ROM	53- 39
146	7660	MCM7660L	MOTA	ROM	55- 9
147	7660	MCM7660P	MOTA	ROM	55- 10
148	7661	MCM7661L	MOTA	ROM	55- 11
149	7680	HM1-7680RP5	HAS	ROM	55- 36
150	7680	HM3-7680RP2	HAS	ROM	55- 54
151	7680	MCM7680CDC	MOTA	ROM	54- 21
152	7680	MCM7680CDM	MOTA	ROM	54- 22
153	7680	MCM7680DC	MOTA	ROM	55- 46
154	7680	MCM7680DCL	MOTA	ROM	54- 41
155	7680	MCM7680DM	MOTA	ROM	55- 57
156	7680	MCM7680DML	MOTA	ROM	54- 49
157	7680	MCM7680LDC	MOTA	ROM	55- 83
158	7680	MCM7680LDM	MOTA	ROM	55- 91
159	7681	HM3-7681RP5	HAS	ROM	55- 37
160	7681	MCM7681CDC	MOTA	ROM	54- 23
161	7681	MCM7681CDM	MOTA	ROM	54- 24
162	7681	MCM7681DC	MOTA	ROM	55- 47
163	7681	MCM7681DCL	MOTA	ROM	54- 42
164	7681	MCM7681DM	MOTA	ROM	55- 58
165	7681	MCM7681DML	MOTA	ROM	54- 50
166	7681	MCM7681LDC	MOTA	ROM	55- 84
167	7681	MCM7681LDM	MOTA	ROM	55- 92
168	7684	MCM7684DC	MOTA	ROM	58- 65
169	7684	MCM7684DM	MOTA	ROM	58- 81
170	7685	MCM7685DC	MOTA	ROM	58- 66
171	7685	MCM7685DM	MOTA	ROM	58- 82
172	7714	NC7714	NIT	SPECIAL	88- 38
173	7810	NC7810	NIT	ROM	57- 24
174	8108	R8108-3C	RKW	RAM	37- 75
175	8108	R8108-3P	RKW	RAM	37- 76
176	8108	R8108-4C	RKW	RAM	37- 78
177	8108	R8108-4P	RKW	RAM	37- 79
178	8108	R8108-5C	RKW	RAM	37- 87
179	8108	R8108-5P	RKW	RAM	37- 88
180	8108	M8108-3MD	EMM	RAM	37- 73
181	8108	M8108-5MD	EMM	RAM	37- 85
182	8108	8108-3CD	EMM	RAM	37- 89
183	8108	8108-3MD	EMM	RAM	37- 71
184	8108	8108-5CD	EMM	RAM	37- 91
185	8108	8108-5MD	EMM	RAM	37- 83
186	8116	MB8116E	FMI	RAM	44- 11
187	8116	MB8116H	FMI	RAM	43- 83
188	8118	M8118-3MD	EMM	RAM	37- 74
189	8118	M8118-5MD	EMM	RAM	37- 86
190	8118	8118-3CJ	EMM	RAM	37- 90
191	8118	8118-3MD	EMM	RAM	37- 72
192	8118	8118-5CJ	EMM	RAM	37- 92
193	8118	8118-5MD	EMM	RAM	37- 84
194	8132	MB8132EH	FMI	RAM	45- 12
195	8132	MB8132EL	FMI	RAM	45- 13
196	8155	ID8155	ITL	RAM	27- 80
197	8156	ID8156	ITL	RAM	27- 81
198	8164	MB8164E	FMI	RAM	45- 46
199	8167	MB8167	FMI	RAM	45- 11
200	8185	ID8185	ITL	RAM	37- 61
201	8200	RC8200N	MULB	SHIFT REG	75- 17
202	8200	RC8200Q	MULB	SHIFT REG	75- 18
203	8200	S8200F	PHIN	SHIFT REG	75- 22
204	8200	S8200F	SIC	SHIFT REG	75- 22
205	8200	S8200F	VALG	SHIFT REG	75- 22
206	8200	S8200N	PHIN	SHIFT REG	75- 23
207	8200	S8200N	SIC	SHIFT REG	75- 23
208	8200	S8200Q	PHIN	SHIFT REG	75- 24
209	8200	S8200Q	SIC	SHIFT REG	75- 24
210	8200	S8200Q	VALG	SHIFT REG	75- 24
211	8200	N8200F	MULB	SHIFT REG	75- 11
212	8200	N8200F	PHIN	SHIFT REG	75- 11
213	8200	N8200F	SIC	SHIFT REG	75- 11
214	8200	N8200F	VALG	SHIFT REG	75- 11
215	8200	N8200N	MULB	SHIFT REG	75- 12
216	8200	N8200N	PHIN	SHIFT REG	75- 12
217	8200	N8200N	SIC	SHIFT REG	75- 12
218	8200	N8200N	VALG	SHIFT REG	75- 12
219	8200	N8200Q	MULB	SHIFT REG	75- 13
220	8200	N8200Q	PHIN	SHIFT REG	75- 13

SYMBOLS AND CODES EXPLAINED IN INTERPRETER

GENERIC PRODUCT INDEX

IN ORDER OF: (1)GENERIC NO. (2)MFR TYPE NO.

LINE No.	[1] GENERIC NO.	[2] MANUFACTURER TYPE NO.	MFR. CODE	PRODUCT CLASS	PAGE & LINE
1	8200	N8200Q	SIC	SHIFT REG	75- 13
2	8201	RC8201F	MULB	SHIFT REG	75- 19
3	8201	RC8201N	MULB	SHIFT REG	75- 20
4	8201	RC8201Q	MULB	SHIFT REG	75- 21
5	8201	S8201F	PHIN	SHIFT REG	75- 25
6	8201	S8201F	SIC	SHIFT REG	75- 25
7	8201	S8201F	VALG	SHIFT REG	75- 25
8	8201	S8201N	PHIN	SHIFT REG	75- 26
9	8201	S8201N	SIC	SHIFT REG	75- 26
10	8201	S8201Q	PHIN	SHIFT REG	75- 27
11	8201	S8201Q	SIC	SHIFT REG	75- 27
12	8201	S8201Q	VALG	SHIFT REG	75- 27
13	8201	N8201F	MULB	SHIFT REG	75- 14
14	8201	N8201F	PHIN	SHIFT REG	75- 14
15	8201	N8201F	SIC	SHIFT REG	75- 14
16	8201	N8201F	VALG	SHIFT REG	75- 14
17	8201	N8201N	MULB	SHIFT REG	75- 15
18	8201	N8201N	PHIN	SHIFT REG	75- 15
19	8201	N8201N	SIC	SHIFT REG	75- 15
20	8201	N8201N	VALG	SHIFT REG	75- 15
21	8201	N8201Q	MULB	SHIFT REG	75- 16
22	8201	N8201Q	PHIN	SHIFT REG	75- 16
23	8201	N8201Q	SIC	SHIFT REG	75- 16
24	8202	RC8202F	MULB	SHIFT REG	83- 23
25	8202	RC8202N	MULB	SHIFT REG	83- 24
26	8202	RC8202Q	MULB	SHIFT REG	83- 25
27	8202	S8202F	PHIN	SHIFT REG	83- 29
28	8202	S8202F	SIC	SHIFT REG	83- 29
29	8202	S8202F	VALG	SHIFT REG	83- 29
30	8202	S8202N	PHIN	SHIFT REG	83- 30
31	8202	S8202N	SIC	SHIFT REG	83- 30
32	8202	S8202Q	PHIN	SHIFT REG	83- 31
33	8202	S8202Q	SIC	SHIFT REG	83- 31
34	8202	S8202Q	VALG	SHIFT REG	83- 31
35	8202	N8202F	MULB	SHIFT REG	83- 17
36	8202	N8202F	PHIN	SHIFT REG	83- 17
37	8202	N8202F	SIC	SHIFT REG	83- 17
38	8202	N8202F	VALG	SHIFT REG	83- 17
39	8202	N8202N	MULB	SHIFT REG	83- 18
40	8202	N8202N	PHIN	SHIFT REG	83- 18
41	8202	N8202N	SIC	SHIFT REG	83- 18
42	8202	N8202N	VALG	SHIFT REG	83- 18
43	8202	N8202Q	MULB	SHIFT REG	83- 19
44	8202	N8202Q	PHIN	SHIFT REG	83- 19
45	8202	N8202Q	SIC	SHIFT REG	83- 19
46	8203	RC8203F	MULB	SHIFT REG	83- 26
47	8203	RC8203N	MULB	SHIFT REG	83- 27
48	8203	RC8203Q	MULB	SHIFT REG	83- 28
49	8203	S8203F	PHIN	SHIFT REG	83- 32
50	8203	S8203F	SIC	SHIFT REG	83- 32
51	8203	S8203F	VALG	SHIFT REG	83- 32
52	8203	S8203N	PHIN	SHIFT REG	83- 33
53	8203	S8203N	SIC	SHIFT REG	83- 33
54	8203	S8203Q	PHIN	SHIFT REG	83- 34
55	8203	S8203Q	SIC	SHIFT REG	83- 34
56	8203	S8203Q	VALG	SHIFT REG	83- 34
57	8203	N8203F	MULB	SHIFT REG	83- 20
58	8203	N8203F	PHIN	SHIFT REG	83- 20
59	8203	N8203F	SIC	SHIFT REG	83- 20
60	8203	N8203F	VALG	SHIFT REG	83- 20
61	8203	N8203N	MULB	SHIFT REG	83- 21
62	8203	N8203N	PHIN	SHIFT REG	83- 21
63	8203	N8203N	SIC	SHIFT REG	83- 21
64	8203	N8203N	VALG	SHIFT REG	83- 21
65	8203	N8203Q	MULB	SHIFT REG	83- 22
66	8203	N8203Q	PHIN	SHIFT REG	83- 22
67	8203	N8203Q	SIC	SHIFT REG	83- 22
68	8204	N8204Y	MULB	ROM	49- 17
69	8204	N8204Y	PHIN	ROM	49- 17
70	8204	N8204YCB504	MULB	CODE CONV	64- 53
71	8204	N8204YCB504	PHIN	CODE CONV	64- 53
72	8204	N8204YCB505	MULB	CODE CONV	64- 12
73	8204	N8204YCB505	PHIN	CODE CONV	64- 12
74	8205	N8205Y	MULB	ROM	51- 67
75	8205	N8205Y	PHIN	ROM	51- 67
76	8205	N8205Y	SIC	ROM	51- 67
77	8205	N8205YCB175#1	MULB	CODE CONV	64- 13
78	8205	N8205YCB175#1	PHIN	CODE CONV	64- 13
79	8205	N8205YCB175#1	SIC	CODE CONV	64- 13
80	8205	N8205YCB175#2	MULB	CODE CONV	64- 58
81	8205	N8205YCB175#2	PHIN	CODE CONV	64- 58
82	8205	N8205YCB175#2	SIC	CODE CONV	64- 58
83	8212	SS6-8212-16	GIC	SHIFT REG	83- 78
84	8216	MB8216E	FMI	RAM	43- 59
85	8216	MB8216N	FMI	RAM	43- 84
86	8220	N8220B	MULB	SPECIAL	87- 1
87	8220	N8220B	PHIN	SPECIAL	87- 1
88	8223	RC8223B	MULB	ROM	46- 95
89	8223	RC8223F	MULB	ROM	46- 96
90	8223	RC8223W	MULB	ROM	46- 97
91	8223	N8223B	MULB	ROM	46- 92
92	8223	N8223F	MULB	ROM	46- 93
93	8223	N8223W	MULB	ROM	46- 94
94	8224	RC8224B	MULB	ROM	46- 26
95	8224	RC8224F	MULB	ROM	46- 27
96	8224	RC8224W	MULB	ROM	46- 28
97	8224	S8224B	PHIN	ROM	46- 29
98	8224	S8224F	PHIN	ROM	46- 30
99	8224	S8224W	PHIN	ROM	46- 31
100	8224	N8224B	MULB	ROM	46- 23
101	8224	N8224B	PHIN	ROM	46- 23
102	8224	N8224CB180	MULB	CODE CONV	64- 11
103	8224	N8224CB180	PHIN	CODE CONV	64- 11
104	8224	N8224F	MULB	ROM	46- 24
105	8224	N8224F	PHIN	ROM	46- 24
106	8224	N8224W	MULB	ROM	46- 25
107	8224	N8224W	PHIN	ROM	46- 25
108	8225	N8225B	MULB	RAM	20- 85
109	8225	N8225B	PHIN	RAM	20- 85
110	8225	N8225F	MULB	RAM	20- 86
111	8225	N8225F	PHIN	RAM	20- 86
112	8225	N8225W	MULB	RAM	20- 87
113	8225	N8225W	PHIN	RAM	20- 87
114	8228	N8228F	VALG	ROM	53- 28
115	8228	N8228I	MULB	ROM	53- 29
116	8228	N8228I	PHIN	ROM	53- 29
117	8228	N8228ICD162	MULB	CHAR GEN	62- 56
118	8228	N8228ICD162	PHIN	CHAR GEN	62- 56
119	8264	MB8264-15E	FMI	RAM	45- 37
120	8264	MB8264-20N	FMI	RAM	45- 47
121	8270	RC8270A	MULB	SHIFT REG	67- 31
122	8270	RC8270F	MULB	SHIFT REG	67- 32
123	8270	RC8270W	MULB	SHIFT REG	67- 33
124	8270	MC8270L	MOTA	SHIFT REG	69- 1
125	8270	S8270A	PHIN	SHIFT REG	67- 44
126	8270	S8270A	SIC	SHIFT REG	67- 44
127	8270	S8270F	PHIN	SHIFT REG	67- 45
128	8270	S8270F	SIC	SHIFT REG	67- 45
129	8270	S8270F	VALG	SHIFT REG	67- 45
130	8270	S8270W	PHIN	SHIFT REG	67- 46
131	8270	S8270W	SIC	SHIFT REG	67- 46
132	8270	S8270W	VALG	SHIFT REG	67- 46
133	8270	N8270A	MULB	SHIFT REG	67- 17
134	8270	N8270A	PHIN	SHIFT REG	67- 17
135	8270	N8270A	SIC	SHIFT REG	67- 17
136	8270	N8270F	MULB	SHIFT REG	67- 18
137	8270	N8270F	PHIN	SHIFT REG	67- 18
138	8270	N8270F	SIC	SHIFT REG	67- 18
139	8270	N8270F	VALG	SHIFT REG	67- 18
140	8270	N8270N	PHIN	SHIFT REG	67- 19
141	8270	N8270N	SIC	SHIFT REG	67- 19
142	8270	N8270N	VALG	SHIFT REG	67- 19
143	8270	N8270W	MULB	SHIFT REG	67- 20
144	8270	N8270W	PHIN	SHIFT REG	67- 20
145	8270	N8270W	SIC	SHIFT REG	67- 20
146	8271	RC8271B	MULB	SHIFT REG	67- 34
147	8271	RC8271F	MULB	SHIFT REG	67- 35
148	8271	RC8271W	MULB	SHIFT REG	67- 36
149	8271	MC8271L	MOTA	SHIFT REG	69- 2
150	8271	S8271B	PHIN	SHIFT REG	67- 47
151	8271	S8271B	SIC	SHIFT REG	67- 47
152	8271	S8271F	PHIN	SHIFT REG	67- 48
153	8271	S8271F	SIC	SHIFT REG	67- 48
154	8271	S8271F	VALG	SHIFT REG	67- 48
155	8271	S8271W	PHIN	SHIFT REG	67- 49
156	8271	S8271W	SIC	SHIFT REG	67- 49
157	8271	S8271W	VALG	SHIFT REG	67- 49
158	8271	N8271B	MULB	SHIFT REG	67- 21
159	8271	N8271B	PHIN	SHIFT REG	67- 21
160	8271	N8271B	SIC	SHIFT REG	67- 21
161	8271	N8271F	MULB	SHIFT REG	67- 22
162	8271	N8271F	PHIN	SHIFT REG	67- 22
163	8271	N8271F	SIC	SHIFT REG	67- 22
164	8271	N8271F	VALG	SHIFT REG	67- 22
165	8271	N8271N	PHIN	SHIFT REG	67- 23
166	8271	N8271N	SIC	SHIFT REG	67- 23
167	8271	N8271N	VALG	SHIFT REG	67- 23
168	8271	N8271W	MULB	SHIFT REG	67- 24
169	8271	N8271W	PHIN	SHIFT REG	67- 24
170	8271	N8271W	SIC	SHIFT REG	67- 24
171	8273	RC8273B	MULB	SHIFT REG	83- 39
172	8273	RC8273F	MULB	SHIFT REG	83- 40
173	8273	RC8273W	MULB	SHIFT REG	83- 41
174	8273	S8273B	PHIN	SHIFT REG	83- 54
175	8273	S8273B	SIC	SHIFT REG	83- 54
176	8273	S8273F	PHIN	SHIFT REG	83- 55
177	8273	S8273F	SIC	SHIFT REG	83- 55
178	8273	S8273F	VALG	SHIFT REG	83- 55
179	8273	S8273W	PHIN	SHIFT REG	83- 56
180	8273	S8273W	SIC	SHIFT REG	83- 56
181	8273	S8273W	VALG	SHIFT REG	83- 56
182	8273	N8273B	MULB	SHIFT REG	83- 47
183	8273	N8273B	PHIN	SHIFT REG	83- 47
184	8273	N8273B	SIC	SHIFT REG	83- 47
185	8273	N8273F	MULB	SHIFT REG	83- 48
186	8273	N8273F	PHIN	SHIFT REG	83- 48
187	8273	N8273F	SIC	SHIFT REG	83- 48
188	8273	N8273F	VALG	SHIFT REG	83- 48
189	8273	N8273N	PHIN	SHIFT REG	83- 49
190	8273	N8273N	SIC	SHIFT REG	83- 49
191	8273	N8273N	VALG	SHIFT REG	83- 49
192	8273	N8273W	MULB	SHIFT REG	83- 50
193	8273	N8273W	PHIN	SHIFT REG	83- 50
194	8273	N8273W	SIC	SHIFT REG	83- 50
195	8274	RC8274B	MULB	SHIFT REG	83- 51
196	8274	RC8274F	MULB	SHIFT REG	83- 52
197	8274	RC8274W	MULB	SHIFT REG	83- 53
198	8274	S8274B	PHIN	SHIFT REG	83- 42
199	8274	S8274B	SIC	SHIFT REG	83- 42
200	8274	S8274F	PHIN	SHIFT REG	83- 43
201	8274	S8274F	SIC	SHIFT REG	83- 43
202	8274	S8274F	VALG	SHIFT REG	83- 43
203	8274	S8274W	PHIN	SHIFT REG	83- 44
204	8274	S8274W	SIC	SHIFT REG	83- 44
205	8274	S8274W	VALG	SHIFT REG	83- 44
206	8274	N8274B	MULB	SHIFT REG	83- 35
207	8274	N8274B	PHIN	SHIFT REG	83- 35
208	8274	N8274B	SIC	SHIFT REG	83- 35
209	8274	N8274F	MULB	SHIFT REG	83- 36
210	8274	N8274F	PHIN	SHIFT REG	83- 36
211	8274	N8274F	SIC	SHIFT REG	83- 36
212	8274	N8274F	VALG	SHIFT REG	83- 36
213	8274	N8274N	PHIN	SHIFT REG	83- 37
214	8274	N8274N	SIC	SHIFT REG	83- 37
215	8274	N8274N	VALG	SHIFT REG	83- 37
216	8274	N8274W	MULB	SHIFT REG	83- 38
217	8274	N8274W	PHIN	SHIFT REG	83- 38
218	8274	N8274W	SIC	SHIFT REG	83- 38
219	8275	RC8275B	MULB	SHIFT REG	76- 91
220	8275	RC8275E	MULB	SHIFT REG	76- 92

SYMBOLS AND CODES EXPLAINED IN INTERPRETER

GENERIC PRODUCT INDEX

IN ORDER OF: (1)GENERIC NO. (2)MFR TYPE NO.

LINE No.	[1] GENERIC NO.	[2] MANUFACTURER TYPE NO.	MFR. CODE	PRODUCT CLASS	PAGE & LINE
1	8275	RC8275R	MULB	SHIFT REG	76- 93
2	8275	S8275B	PHIN	SHIFT REG	65- 62
3	8275	S8275B	SIC	SHIFT REG	65- 62
4	8275	S8275E	PHIN	SHIFT REG	65- 63
5	8275	S8275E	SIC	SHIFT REG	65- 63
6	8275	S8275R	PHIN	SHIFT REG	65- 64
7	8275	S8275R	SIC	SHIFT REG	65- 64
8	8275	N8275B	MULB	SHIFT REG	65- 59
9	8275	N8275B	PHIN	SHIFT REG	65- 59
10	8275	N8275B	SIC	SHIFT REG	65- 59
11	8275	N8275E	MULB	SHIFT REG	65- 60
12	8275	N8275E	PHIN	SHIFT REG	65- 60
13	8275	N8275E	SIC	SHIFT REG	65- 60
14	8275	N8275R	MULB	SHIFT REG	65- 61
15	8275	N8275R	PHIN	SHIFT REG	65- 61
16	8275	N8275R	SIC	SHIFT REG	65- 61
17	8276	N8276A	MULB	SHIFT REG	82- 58
18	8276	N8276A	PHIN	SHIFT REG	82- 58
19	8276	N8276A	SIC	SHIFT REG	82- 58
20	8276	N8276F	MULB	SHIFT REG	82- 59
21	8276	N8276F	PHIN	SHIFT REG	82- 59
22	8276	N8276F	SIC	SHIFT REG	82- 59
23	8277	N8277B	MULB	SHIFT REG	82- 89
24	8277	N8277B	PHIN	SHIFT REG	82- 89
25	8277	N8277B	SIC	SHIFT REG	82- 89
26	8277	N8277F	MULB	SHIFT REG	82- 90
27	8277	N8277F	PHIN	SHIFT REG	82- 90
28	8277	N8277F	SIC	SHIFT REG	82- 90
29	8277	N8277F	VALG	SHIFT REG	82- 90
30	8277	N8277N	PHIN	SHIFT REG	82- 91
31	8277	N8277N	SIC	SHIFT REG	82- 91
32	8277	N8277N	VALG	SHIFT REG	82- 91
33	8300	MC8300L	MOTA	SHIFT REG	69- 79
34	8300	MC8300P	MOTA	SHIFT REG	69- 80
35	8308	EA8308AC	EAI	ROM	54- 76
36	8308	EA8308AL	EAI	ROM	54-108
37	8308	EA8308AP	EAI	ROM	54- 77
38	8316	RO3-8316A	GIC	ROM	58- 24
39	8316	RO3-8316B	GIC	ROM	58- 22
40	8316	C8316A	AMD	ROM	58- 19
41	8316	EA8316ADC	EAI	ROM	58- 36
42	8316	EA8316ADM	EAI	ROM	58- 37
43	8316	EA8316EDC	EAI	ROM	58- 26
44	8316	EA8316EDL	EAI	ROM	58- 31
45	8328	MC8328L	MOTA	SHIFT REG	82- 71
46	8328	MC8328P	MOTA	SHIFT REG	82- 72
47	8332	EA8332A1DC	EAI	ROM	59- 40
48	8332	EA8332A1PC	EAI	ROM	59- 41
49	8332	EA8332ADC	EAI	ROM	59- 43
50	8332	EA8332APC	EAI	ROM	59- 44
51	8332	EA8332B1DC	EAI	ROM	59- 42
52	8332	EA8332BDC	EAI	ROM	59- 45
53	8332	EA8332BPC	EAI	ROM	59- 46
54	8355	ID8355	ITL	ROM	57- 41
55	8355	ID8355A-8	ITL	ROM	58- 48
56	8355	uPD8355C	NECM	ROM	57-101
57	8404	MB8404E	FMI	RAM	40- 28
58	8414	MB8414E	FMI	RAM	33- 17
59	8520	MSL8520A	OKIJ	ROM	48- 84
60	8521	MSL8521A	OKIJ	ROM	48- 85
61	8655	KM8655	TAI	ROM	52-103
62	8656	KM8656	TAI	ROM	56- 49
63	8657	KM8657	TAI	ROM	59- 32
64	8678	DM8678J	NSC	CHAR GEN	62- 54
65	8678	DM8678N	NSC	CHAR GEN	62- 55
66	8680	KM8680	TAI	RAM	38- 48
67	8755	uPD8755AD	NECM	ROM	58-107
68	9016	AM9016CDC	AMD	RAM	44- 73
69	9016	AM9016CPC	AMD	RAM	44- 74
70	9016	AM9016DDC	AMD	RAM	44- 38
71	9016	AM9016DPC	AMD	RAM	44- 39
72	9016	AM9016EDC	AMD	RAM	43-105
73	9016	AM9016EPC	AMD	RAM	43-106
74	9016	AM9016FDC	AMD	RAM	43- 68
75	9016	AM9016FPC	AMD	RAM	43- 69
76	9030	9030DC	FSC	RAM	18- 1
77	9044	AM9044BDC	AMD	RAM	42- 91
78	9044	AM9044BDM	AMD	RAM	42- 92
79	9044	AM9044BPC	AMD	RAM	42- 93
80	9044	AM9044CDC	AMD	RAM	42- 66
81	9044	AM9044CDM	AMD	RAM	42- 67
82	9044	AM9044CPC	AMD	RAM	42- 68
83	9044	AM9044DDC	AMD	RAM	42- 42
84	9044	AM9044DDM	AMD	RAM	42- 43
85	9044	AM9044DPC	AMD	RAM	42- 44
86	9044	AM9044EDC	AMD	RAM	42- 22
87	9044	AM9044EPC	AMD	RAM	42- 23
88	9050	AM9050CDC	AMD	RAM	39- 37
89	9050	AM9050CPC	AMD	RAM	39- 38
90	9050	AM9050DDC	AMD	RAM	39- 9
91	9050	AM9050DPC	AMD	RAM	39- 10
92	9050	AM9050EDC	AMD	RAM	38- 87
93	9050	AM9050EPC	AMD	RAM	38- 88
94	9060	AM9060CDC	AMD	RAM	39- 39
95	9060	AM9060CPC	AMD	RAM	39- 40
96	9060	AM9060DDC	AMD	RAM	39- 11
97	9060	AM9060DPC	AMD	RAM	39- 12
98	9060	AM9060EDC	AMD	RAM	38- 89
99	9060	AM9060EPC	AMD	RAM	38- 90
100	9101	AM9101	AMD	RAM	25- 96
101	9101	AM9101ADC	AMD	RAM	27- 57
102	9101	AM9101ADM	AMD	RAM	27- 58
103	9101	AM9101AFM	AMD	RAM	27- 59
104	9101	AM9101APC	AMD	RAM	27- 60
105	9101	AM9101BDC	AMD	RAM	27- 26
106	9101	AM9101BDM	AMD	RAM	27- 27
107	9101	AM9101BFM	AMD	RAM	27- 28
108	9101	AM9101BPC	AMD	RAM	27- 29
109	9101	AM9101CDC	AMD	RAM	27- 5
110	9101	AM9101CDM	AMD	RAM	27- 6
111	9101	AM9101CPC	AMD	RAM	27- 7
112	9101	AM9101DDC	AMD	RAM	26-100
113	9101	AM9101DPC	AMD	RAM	26-101
114	9101	AM9101EDC	AMD	RAM	25- 90
115	9101	AM9101EPC	AMD	RAM	25- 91
116	9102	AM9102ADC	AMD	RAM	32- 33
117	9102	AM9102ADM	AMD	RAM	32- 34
118	9102	AM9102AFM	AMD	RAM	32- 35
119	9102	AM9102APC	AMD	RAM	32- 36
120	9102	AM9102BDC	AMD	RAM	31- 95
121	9102	AM9102BDM	AMD	RAM	31- 96
122	9102	AM9102BFM	AMD	RAM	31- 97
123	9102	AM9102BPC	AMD	RAM	31- 98
124	9102	AM9102CDC	AMD	RAM	31- 48
125	9102	AM9102CDM	AMD	RAM	31- 49
126	9102	AM9102CPC	AMD	RAM	31- 50
127	9102	AM9102DC	AMD	RAM	32- 63
128	9102	AM9102DDC	AMD	RAM	31- 29
129	9102	AM9102DM	AMD	RAM	32- 64
130	9102	AM9102DPC	AMD	RAM	31- 30
131	9102	AM9102EDC	AMD	RAM	30- 84
132	9102	AM9102EPC	AMD	RAM	30- 85
133	9102	AM9102FM	AMD	RAM	32- 65
134	9102	AM9102PC	AMD	RAM	32- 66
135	9111	AM9111	AMD	RAM	25- 97
136	9111	AM9111ADC	AMD	RAM	27- 61
137	9111	AM9111ADM	AMD	RAM	27- 62
138	9111	AM9111AFM	AMD	RAM	27- 63
139	9111	AM9111APC	AMD	RAM	27- 64
140	9111	AM9111BDC	AMD	RAM	27- 30
141	9111	AM9111BDM	AMD	RAM	27- 31
142	9111	AM9111BFM	AMD	RAM	27- 32
143	9111	AM9111BPC	AMD	RAM	27- 33
144	9111	AM9111CDC	AMD	RAM	27- 8
145	9111	AM9111CDM	AMD	RAM	27- 9
146	9111	AM9111CPC	AMD	RAM	27- 10
147	9111	AM9111DDC	AMD	RAM	26-102
148	9111	AM9111DPC	AMD	RAM	26-103
149	9111	AM9111EDC	AMD	RAM	25- 92
150	9111	AM9111EPC	AMD	RAM	25- 93
151	9112	AM9112	AMD	RAM	25- 98
152	9112	AM9112ADC	AMD	RAM	27- 65
153	9112	AM9112ADM	AMD	RAM	27- 66
154	9112	AM9112AFM	AMD	RAM	27- 67
155	9112	AM9112APC	AMD	RAM	27- 68
156	9112	AM9112BDC	AMD	RAM	27- 34
157	9112	AM9112BDM	AMD	RAM	27- 35
158	9112	AM9112BFM	AMD	RAM	27- 36
159	9112	AM9112BPC	AMD	RAM	27- 37
160	9112	AM9112CDC	AMD	RAM	27- 11
161	9112	AM9112CDM	AMD	RAM	27- 12
162	9112	AM9112CPC	AMD	RAM	27- 13
163	9112	AM9112DDC	AMD	RAM	26-104
164	9112	AM9112DPC	AMD	RAM	26-105
165	9112	AM9112EDC	AMD	RAM	25- 94
166	9112	AM9112EPC	AMD	RAM	25- 95
167	9112	Am9112APC	AMD	RAM	25- 89
168	9114	AM9114BDC	AMD	RAM	36- 85
169	9114	AM9114BDM	AMD	RAM	36- 77
170	9114	AM9114BPC	AMD	RAM	36- 86
171	9114	AM9114CDC	AMD	RAM	36- 60
172	9114	AM9114CDM	AMD	RAM	36- 61
173	9114	AM9114CPC	AMD	RAM	36- 62
174	9114	AM9114EDC	AMD	RAM	36- 40
175	9114	AM9114EPC	AMD	RAM	36- 41
176	9124	AM9124BDC	AMD	RAM	36- 87
177	9124	AM9124BDM	AMD	RAM	36- 88
178	9124	AM9124BPC	AMD	RAM	36- 89
179	9124	AM9124CDC	AMD	RAM	36- 63
180	9124	AM9124CDM	AMD	RAM	36- 64
181	9124	AM9124CPC	AMD	RAM	36- 65
182	9124	AM9124EDC	AMD	RAM	36- 42
183	9124	AM9124EPC	AMD	RAM	36- 43
184	9130	AM9130ADC	AMD	RAM	37- 38
185	9130	AM9130ADM	AMD	RAM	37- 39
186	9130	AM9130APC	AMD	RAM	37- 40
187	9130	AM9130BDC	AMD	RAM	37- 28
188	9130	AM9130BDM	AMD	RAM	37- 29
189	9130	AM9130BPC	AMD	RAM	37- 30
190	9130	AM9130CDC	AMD	RAM	37- 18
191	9130	AM9130CDM	AMD	RAM	37- 19
192	9130	AM9130CPC	AMD	RAM	37- 20
193	9130	AM9130DDC	AMD	RAM	37- 10
194	9130	AM9130DPC	AMD	RAM	37- 11
195	9130	AM9130EDC	AMD	RAM	37- 1
196	9130	AM9130EPC	AMD	RAM	37- 2
197	9131	AM9131ADC	AMD	RAM	37- 41
198	9131	AM9131ADM	AMD	RAM	37- 42
199	9131	AM9131BDC	AMD	RAM	37- 31
200	9131	AM9131BDM	AMD	RAM	37- 32
201	9131	AM9131CDC	AMD	RAM	37- 21
202	9131	AM9131CDM	AMD	RAM	37- 22
203	9131	AM9131DDC	AMD	RAM	37- 12
204	9131	AM9131EDC	AMD	RAM	37- 3
205	9140	AM9140ADC	AMD	RAM	42-100
206	9140	AM9140ADM	AMD	RAM	42-101
207	9140	AM9140APC	AMD	RAM	42-102
208	9140	AM9140BDC	AMD	RAM	42- 82
209	9140	AM9140BDM	AMD	RAM	42- 83
210	9140	AM9140BPC	AMD	RAM	42- 84
211	9140	AM9140CDC	AMD	RAM	42- 69
212	9140	AM9140CDM	AMD	RAM	42- 70
213	9140	AM9140CPC	AMD	RAM	42- 71
214	9140	AM9140DDC	AMD	RAM	42- 45
215	9140	AM9140DPC	AMD	RAM	42- 46
216	9140	AM9140EDC	AMD	RAM	42- 24
217	9140	AM9140EPC	AMD	RAM	42- 25
218	9208	AM9208BDC	AMD	ROM	54- 91
219	9208	AM9208BDM	AMD	ROM	54- 92
220	9208	AM9208CDC	AMD	ROM	54- 83

SYMBOLS AND CODES EXPLAINED IN INTERPRETER

GENERIC PRODUCT INDEX

IN ORDER OF: (1)GENERIC NO. (2)MFR TYPE NO.

LINE No.	1 GENERIC NO.	2 MANUFACTURER TYPE NO.	MFR. CODE	PRODUCT CLASS	PAGE & LINE
1	9214	AM9214DC	AMD	ROM	51- 39
2	9214	AM9214DM	AMD	ROM	51- 40
3	9216	AM9216BDC	AMD	ROM	58- 2
4	9216	AM9216BDM	AMD	ROM	58- 3
5	9216	AM9216CDC	AMD	ROM	57-100
6	9217	AM9217ADC	AMD	ROM	58- 17
7	9217	AM9217ADM	AMD	ROM	58- 18
8	9217	AM9217BDC	AMD	ROM	58- 4
9	9217	AM9217BDM	AMD	ROM	58- 5
10	9232	AM9232BCC	AMD	ROM	59- 88
11	9232	AM9232BDC	AMD	ROM	59- 89
12	9232	AM9232BDM	AMD	ROM	59- 90
13	9232	AM9232BPC	AMD	ROM	59- 91
14	9232	AM9232CCC	AMD	ROM	59- 77
15	9232	AM9232CDC	AMD	ROM	59- 78
16	9232	AM9232CPC	AMD	ROM	59- 79
17	9233	AM9233BCC	AMD	ROM	59- 92
18	9233	AM9233BDC	AMD	ROM	59- 93
19	9233	AM9233BDM	AMD	ROM	59- 94
20	9233	AM9233BPC	AMD	ROM	59- 95
21	9233	AM9233CCC	AMD	ROM	59- 80
22	9233	AM9233CDC	AMD	ROM	59- 81
23	9233	AM9233CPC	AMD	ROM	59- 82
24	9244	AM9244BDC	AMD	RAM	42- 94
25	9244	AM9244BDM	AMD	RAM	42- 95
26	9244	AM9244BPC	AMD	RAM	42- 96
27	9244	AM9244CDC	AMD	RAM	42- 72
28	9244	AM9244CDM	AMD	RAM	42- 73
29	9244	AM9244CPC	AMD	RAM	42- 74
30	9244	AM9244DDC	AMD	RAM	42- 47
31	9244	AM9244DDM	AMD	RAM	42- 48
32	9244	AM9244DPC	AMD	RAM	42- 49
33	9244	AM9244EDC	AMD	RAM	42- 26
34	9244	AM9244EPC	AMD	RAM	42- 27
35	9300	RC9300B	MULB	SHIFT REG	67- 37
36	9300	AM9300DC	AMD	SHIFT REG	69- 68
37	9300	AM9300DM	AMD	SHIFT REG	69- 69
38	9300	AM9300FM	AMD	SHIFT REG	69- 70
39	9300	AM9300PC	AMD	SHIFT REG	69- 71
40	9300	MC9300L	MOTA	SHIFT REG	69- 81
41	9300	9300DC	FSC	SHIFT REG	71- 41
42	9300	9300DM	FSC	SHIFT REG	71- 42
43	9300	9300FC	FSC	SHIFT REG	71- 43
44	9300	9300FM	FSC	SHIFT REG	71- 44
45	9300	9300PC	FSC	SHIFT REG	71- 45
46	9300	S9300B	PHIN	SHIFT REG	67- 50
47	9300	S9300B	SIC	SHIFT REG	67- 50
48	9300	S9300E	PHIN	SHIFT REG	67- 51
49	9300	S9300E	SIC	SHIFT REG	67- 51
50	9300	S9300F	SIC	SHIFT REG	71- 78
51	9300	S9300F	VALG	SHIFT REG	71- 78
52	9300	S9300W	SIC	SHIFT REG	71- 79
53	9300	S9300W	VALG	SHIFT REG	71- 79
54	9300	N9300B	MULB	SHIFT REG	67- 25
55	9300	N9300B	PHIN	SHIFT REG	67- 25
56	9300	N9300B	SIC	SHIFT REG	67- 25
57	9300	N9300E	MULB	SHIFT REG	67- 26
58	9300	N9300E	PHIN	SHIFT REG	67- 26
59	9300	N9300E	SIC	SHIFT REG	67- 26
60	9300	N9300F	SIC	SHIFT REG	71- 60
61	9300	N9300F	VALG	SHIFT REG	71- 60
62	9300	N9300N	SIC	SHIFT REG	71- 61
63	9300	N9300N	VALG	SHIFT REG	71- 61
64	9316	RO3-9316A	GIC	ROM	58- 25
65	9316	RO3-9316B	GIC	ROM	58- 23
66	9316	RO3-9316C	GIC	ROM	58- 21
67	9328	AM9328DC	AMD	SHIFT REG	82-102
68	9328	AM9328DM	AMD	SHIFT REG	83- 1
69	9328	AM9328FM	AMD	SHIFT REG	83- 2
70	9328	AM9328PC	AMD	SHIFT REG	83- 3
71	9328	MC9328L	MOTA	SHIFT REG	82- 73
72	9328	9328DC	FSC	SHIFT REG	82- 97
73	9328	9328DM	FSC	SHIFT REG	82- 98
74	9328	9328FC	FSC	SHIFT REG	82- 99
75	9328	9328FM	FSC	SHIFT REG	82-100
76	9328	9328PC	FSC	SHIFT REG	82-101
77	9332	RO3-9332A	GIC	ROM	59- 76
78	9332	RO3-9332B	GIC	ROM	59- 75
79	9338	AM9338DC	AMD	SHIFT REG	77- 14
80	9338	AM9338DM	AMD	SHIFT REG	77- 15
81	9338	AM9338FM	AMD	SHIFT REG	77- 16
82	9338	AM9338PC	AMD	SHIFT REG	77- 17
83	9338	9338DC	FSC	SHIFT REG	77- 5
84	9338	9338DM	FSC	SHIFT REG	77- 6
85	9338	9338FC	FSC	SHIFT REG	77- 7
86	9338	9338FM	FSC	SHIFT REG	77- 8
87	9338	9338PC	FSC	SHIFT REG	77- 9
88	9401	AM9401DC	AMD	SHIFT REG	86- 25
89	9401	AM9401DM	AMD	SHIFT REG	86- 26
90	9401	AM9401PC	AMD	SHIFT REG	86- 27
91	9403	9403DC	FSC	SHIFT REG	74- 44
92	9403	9403DM	FSC	SHIFT REG	74- 45
93	9404	AM9404CDC	AMD	RAM	35- 56
94	9404	AM9404CDM	AMD	RAM	35- 57
95	9404	AM9404DDC	AMD	RAM	34- 63
96	9404	AM9404DDM	AMD	RAM	34- 64
97	9404	AM9404FDC	AMD	RAM	33- 93
98	9410	9410DC	FSC	RAM	20- 59
99	9410	9410DM	FSC	RAM	20- 60
100	9423	9423DC	FSC	SHIFT REG	74- 47
101	9423	9423FC	FSC	SHIFT REG	74- 48
102	9423	9423PC	FSC	SHIFT REG	74- 49
103	9650	MSL9650A	OKIJ	CHAR GEN	62- 8
104	9650	MSL9650AS	OKIJ	CHAR GEN	63- 60
105	9652	MSL9652A	OKIJ	CHAR GEN	63- 61
106	9660	MSL9660AS	OKIJ	CHAR GEN	63- 59
107	9661	MSL9661AS	OKIJ	CHAR GEN	62-104
108	9662	MSL9662RS	OKIJ	CHAR GEN	62-105
109	9663	MSL9663RS	OKIJ	CHAR GEN	62-106
110	9664	MSL9664RS	OKIJ	CHAR GEN	62-107
111	9665	MSL9665RS	OKIJ	CHAR GEN	62-108
112	9702	AM9702A-1HDC	AMD	ROM	49- 50
113	9702	AM9702A-2HDC	AMD	ROM	49- 54
114	9702	AM9702AHDC	AMD	ROM	49- 58
115	9702	AM9702AL-1HDC	AMD	ROM	49- 51
116	9702	AM9702AL-2HDC	AMD	ROM	49- 55
117	10000	F10000DC	FSC	SHIFT REG	73- 19
118	10000	F10000DM	FSC	SHIFT REG	73- 20
119	10000	F10000FC	FSC	SHIFT REG	73- 21
120	10000	F10000FM	FSC	SHIFT REG	73- 22
121	10000	F10000PC	FSC	SHIFT REG	73- 23
122	10139	10139F	MULB	ROM	46- 39
123	10139	10139F	PHIN	ROM	46- 39
124	10139	10139F	SIC	ROM	46- 39
125	10139	10139F	VALG	ROM	46- 39
126	10139	10139N	PHIN	ROM	46- 40
127	10139	10139N	SIC	ROM	46- 40
128	10139	10139N	VALG	ROM	46- 40
129	10139	GXB10139	MULB	ROM	46- 41
130	10139	GXB10139	RTCF	ROM	46- 41
131	10139	MCM10139F	MOTA	ROM	46- 35
132	10139	MCM10139L	MOTA	ROM	46- 36
133	10140	SN10140JE	TII	RAM	21- 37
134	10140	10140F	MULB	RAM	21- 31
135	10140	10140F	PHIN	RAM	21- 31
136	10140	10140F	SIC	RAM	21- 31
137	10140	GXB10140	MULB	RAM	21- 34
138	10140	GXB10140	RTCF	RAM	21- 34
139	10141	MC10141L	MOTA	SHIFT REG	73- 14
140	10141	MC10141P	MOTA	SHIFT REG	73- 15
141	10141	F10141DC	FSC	SHIFT REG	73- 27
142	10141	F10141FC	FSC	SHIFT REG	73- 28
143	10141	GXB10141	MULB	SHIFT REG	73- 25
144	10142	SN10142JE	TII	RAM	21- 28
145	10142	uPB10142D	NECJ	RAM	21- 30
146	10142	10142F	MULB	RAM	21- 23
147	10142	10142F	PHIN	RAM	21- 23
148	10142	10142F	SIC	RAM	21- 23
149	10142	10142I	MULB	RAM	21- 24
150	10142	10142I	PHIN	RAM	21- 24
151	10142	10142I	SIC	RAM	21- 24
152	10142	GXB10142	MULB	RAM	21- 25
153	10142	GXB10142	RTCF	RAM	21- 25
154	10143	MCM10143L	MOTA	RAM	18- 95
155	10144	SN10144JE	TII	RAM	22- 66
156	10144	uPB10144D	NECJ	RAM	22- 53
157	10144	GXB10144	MULB	RAM	22- 61
158	10144	GXB10144	RTCF	RAM	22- 61
159	10144	MCM10144F	MOTA	RAM	22- 54
160	10144	MCM10144L	MOTA	RAM	22- 55
161	10145	10145F	MULB	RAM	19- 51
162	10145	10145F	PHIN	RAM	19- 51
163	10145	10145F	SIC	RAM	19- 51
164	10145	10145I	MULB	RAM	19- 52
165	10145	10145I	PHIN	RAM	19- 52
166	10145	10145I	SIC	RAM	19- 52
167	10145	F10145ADC	FSC	RAM	19- 53
168	10145	F10145AFC	FSC	RAM	19- 54
169	10145	F10145APC	FSC	RAM	19- 55
170	10145	GXB10145	MULB	RAM	19- 60
171	10145	GXB10145	RTCF	RAM	19- 60
172	10145	MCM10145F	MOTA	RAM	19- 61
173	10145	MCM10145L	MOTA	RAM	19- 62
174	10145	HD10145	HITJ	SHIFT REG	84- 21
175	10146	MCM10146F	MOTA	RAM	28- 22
176	10146	MCM10146L	MOTA	RAM	28- 23
177	10147	SN10147JE	TII	RAM	21-104
178	10147	GXB10147A	SIEG	RAM	21-101
179	10147	MCM10147F	MOTA	RAM	21- 99
180	10147	MCM10147L	MOTA	RAM	21-100
181	10147	HD10147	HITJ	RAM	21- 98
182	10148	SN10148JE	TII	RAM	21- 38
183	10148	uPB10148D	NECJ	RAM	21- 39
184	10148	10148F	MULB	RAM	21- 32
185	10148	10148F	PHIN	RAM	21- 32
186	10148	10148F	SIC	RAM	21- 32
187	10148	GXB10148	MULB	RAM	21- 35
188	10148	GXB10148	RTCF	RAM	21- 35
189	10148	MCM10148AL	MOTA	RAM	21- 36
190	10148	MCM10148F	MOTA	RAM	21- 26
191	10148	MCM10148L	MOTA	RAM	21- 27
192	10148	HD10148	HITJ	RAM	19- 59
193	10149	10149F	MULB	ROM	47-105
194	10149	10149F	PHIN	ROM	47-105
195	10149	10149F	SIC	ROM	47-105
196	10149	10149F	VALG	ROM	47-105
197	10149	GXB10149	MULB	ROM	47-106
198	10149	GXB10149	PHIN	ROM	47-106
199	10149	GXB10149	RTCF	ROM	47-106
200	10149	GXB10149	SIEG	ROM	47-106
201	10149	MCM10149F	MOTA	ROM	47-107
202	10149	MCM10149L	MOTA	ROM	47-108
203	10151	10151F	MULB	RAM	21- 33
204	10151	10151F	PHIN	RAM	21- 33
205	10151	10151F	SIC	RAM	21- 33
206	10152	MCM10152F	MOTA	RAM	22- 51
207	10152	MCM10152L	MOTA	RAM	22- 52
208	10155	10155F	PHIN	SPECIAL	87- 4
209	10155	10155F	SIC	SPECIAL	87- 4
210	10155	10155F	VALG	SPECIAL	87- 4
211	10155	10155N	PHIN	SPECIAL	87- 5
212	10155	10155N	SIC	SPECIAL	87- 5
213	10155	10155N	VALG	SPECIAL	87- 5
214	10155	GXB10155	MULB	SPECIAL	87- 6
215	10155	GXB10155	RTCF	SPECIAL	87- 6
216	10176	uPB10176D	NECJ	SHIFT REG	75- 97
217	10176	MC10176L	MOTA	SHIFT REG	76- 84
218	10176	MC10176P	MOTA	SHIFT REG	76- 85
219	10176	10176F	MULB	SHIFT REG	76- 83
220	10176	10176F	PHIN	SHIFT REG	76- 83

SYMBOLS AND CODES EXPLAINED IN INTERPRETER

GENERIC PRODUCT INDEX

IN ORDER OF: (1)GENERIC NO. (2)MFR TYPE NO.

LINE No.	[1] GENERIC NO.	[2] MANUFACTURER TYPE NO.	MFR. CODE	PRODUCT CLASS	PAGE & LINE
1	10176	10176F	SIC	SHIFT REG	76- 83
2	10176	F10176DC	FSC	SHIFT REG	75- 74
3	10176	F10176FC	FSC	SHIFT REG	75- 75
4	10176	F10176PC	FSC	SHIFT REG	75- 76
5	10186	MC10186L	MOTA	SHIFT REG	76- 86
6	10186	F10186DC	FSC	SHIFT REG	75- 77
7	10186	F10186FC	FSC	SHIFT REG	75- 78
8	10186	F10186PC	FSC	SHIFT REG	75- 79
9	10241	RCD10241	RKW	SPECIAL	87- 17
10	10241	RCT10241	RKW	SPECIAL	87- 21
11	10241	RFD10241	RKW	SPECIAL	87- 19
12	10241	RPD10241	RKW	SPECIAL	87- 18
13	10241	RSA10241	RKW	SPECIAL	87- 20
14	10405	F10405DC	FSC	RAM	21-102
15	10405	F10405FC	FSC	RAM	21-103
16	10410	F10410DC	FSC	RAM	22- 58
17	10410	F10410FC	FSC	RAM	22- 59
18	10410	F10410PC	FSC	RAM	22- 60
19	10411	F10411DC	FSC	RAM	22- 62
20	10411	F10411FC	FSC	RAM	22- 63
21	10411	F10411PC	FSC	RAM	22- 64
22	10414	HM10414	HITJ	RAM	22- 47
23	10414	HM10414-1	HITJ	RAM	22- 42
24	10414	DM10414J	NSC	RAM	22- 48
25	10414	DM10414N	NSC	RAM	22- 49
26	10414	F10414DC	FSC	RAM	22- 43
27	10414	F10414FC	FSC	RAM	22- 44
28	10415	MBM10415A	FMI	RAM	28- 30
29	10415	MBM10415AH	FMI	RAM	28- 20
30	10415	DM10415AJ	NSC	RAM	28- 12
31	10415	DM10415AN	NSC	RAM	28- 13
32	10415	DM10415J	NSC	RAM	28- 25
33	10415	DM10415N	NSC	RAM	28- 26
34	10415	F10415ADC	FSC	RAM	28- 14
35	10415	F10415AFC	FSC	RAM	28- 15
36	10415	F10415DC	FSC	RAM	28- 27
37	10415	F10415FC	FSC	RAM	28- 28
38	10415	GXB10415	MULB	RAM	28- 33
39	10415	GXB10415	RTCF	RAM	28- 33
40	10415	GXB10415A	MULB	RAM	28- 24
41	10415	GXB10415A	RTCF	RAM	28- 24
42	10416	F10416DC	FSC	ROM	47-101
43	10416	F10416FC	FSC	ROM	47-102
44	10422	HM10422	HITJ	RAM	24- 30
45	10422	MBM10422	FMI	RAM	24- 32
46	10422	F10422DC	FSC	RAM	24- 24
47	10422	F10422FC	FSC	RAM	24- 25
48	10422	GBX10422AD	PHIN	RAM	24- 22
49	10422	GXB10422AF	RTCF	RAM	24- 34
50	10422	GXB10422AN	RTCF	RAM	24- 35
51	10422	GXB10422F	RTCF	RAM	24- 40
52	10422	GXB10422N	RTCF	RAM	24- 41
53	10470	HM10470	HITJ	RAM	39- 91
54	10470	HM10470-1	HITJ	RAM	39- 90
55	10470	MBM10470	FMI	RAM	39- 95
56	10470	F10470DC	FSC	RAM	39- 92
57	10474	MBM10474	FMI	RAM	32-102
58	10539	MCM10539F	MOTA	ROM	46- 37
59	10539	MCM10539L	MOTA	ROM	46- 38
60	10541	MC10541F	MOTA	SHIFT REG	73- 16
61	10541	MC10541L	MOTA	SHIFT REG	73- 17
62	10541	10541DM	FSC	SHIFT REG	73- 26
63	10541	F10541DM	FSC	SHIFT REG	73- 29
64	10541	F10541FM	FSC	SHIFT REG	73- 30
65	10544	MCM10544F	MOTA	RAM	22- 56
66	10544	MCM10544L	MOTA	RAM	22- 57
67	10545	F10545ADM	FSC	RAM	19- 56
68	10545	F10545AFM	FSC	RAM	19- 57
69	10545	MCM10545F	MOTA	RAM	19- 63
70	10545	MCM10545L	MOTA	RAM	19- 64
71	10546	MCM10546F	MOTA	RAM	28- 31
72	10546	MCM10546L	MOTA	RAM	28- 32
73	10547	MCM10547F	MOTA	RAM	21- 96
74	10547	MCM10547L	MOTA	RAM	21- 97
75	10548	MCM10548F	MOTA	RAM	21- 21
76	10548	MCM10548L	MOTA	RAM	21- 22
77	10549	MCM10549F	MOTA	ROM	48- 1
78	10549	MCM10549L	MOTA	ROM	48- 2
79	10552	MCM10552F	MOTA	RAM	22- 40
80	10552	MCM10552L	MOTA	RAM	22- 41
81	10576	F10576DM	FSC	SHIFT REG	75- 80
82	10576	F10576FM	FSC	SHIFT REG	75- 81
83	10586	F10586DM	FSC	SHIFT REG	75- 82
84	10586	F10586FM	FSC	SHIFT REG	75- 83
85	14006	MC14006BAL	MOTA	SHIFT REG	75- 48
86	14006	MC14006BCL	MOTA	SHIFT REG	75- 49
87	14006	MC14006BCP	MOTA	SHIFT REG	75- 50
88	14006	HD14006B	HITJ	SHIFT REG	83- 93
89	14014	MC14014BAL	MOTA	SHIFT REG	80- 7
90	14014	MC14014BCL	MOTA	SHIFT REG	80- 8
91	14014	MC14014BCP	MOTA	SHIFT REG	80- 9
92	14014	HD14014B	HITJ	SHIFT REG	77- 18
93	14015	MC14015BAL	MOTA	SHIFT REG	74- 12
94	14015	MC14015BCL	MOTA	SHIFT REG	74- 13
95	14015	MC14015BCP	MOTA	SHIFT REG	74- 14
96	14015	HD14015B	HITJ	SHIFT REG	74- 11
97	14021	MC14021BAL	MOTA	SHIFT REG	80- 10
98	14021	MC14021BCL	MOTA	SHIFT REG	80- 11
99	14021	MC14021BCP	MOTA	SHIFT REG	80- 12
100	14021	HD14021B	HITJ	SHIFT REG	77- 19
101	14034	MC14034BAL	MOTA	SHIFT REG	77- 43
102	14034	MC14034BCL	MOTA	SHIFT REG	77- 44
103	14034	MC14034BCP	MOTA	SHIFT REG	77- 45
104	14034	HD14034B	HITJ	SHIFT REG	76- 99
105	14035	MC14035BAL	MOTA	SHIFT REG	66- 26
106	14035	MC14035BCL	MOTA	SHIFT REG	66- 27
107	14035	MC14035BCP	MOTA	SHIFT REG	66- 28
108	14035	HD14035B	HITJ	SHIFT REG	66- 25
109	14076	MC14076BAL	MOTA	SHIFT REG	66- 46
110	14076	MC14076BCL	MOTA	SHIFT REG	66- 47
111	14076	MC14076BCP	MOTA	SHIFT REG	66- 48
112	14094	MC14094BAL	MOTA	SHIFT REG	81- 7
113	14094	MC14094BCL	MOTA	SHIFT REG	81- 8
114	14094	MC14094BCP	MOTA	SHIFT REG	81- 9
115	14174	MC14174BAL	MOTA	SHIFT REG	75- 98
116	14174	MC14174BCL	MOTA	SHIFT REG	75- 99
117	14174	MC14174BCP	MOTA	SHIFT REG	76- 1
118	14175	MC14175BAL	MOTA	SHIFT REG	66- 52
119	14175	MC14175BCL	MOTA	SHIFT REG	66- 53
120	14175	MC14175BCP	MOTA	SHIFT REG	66- 54
121	14194	MC14194BAL	MOTA	SHIFT REG	66- 49
122	14194	MC14194BCL	MOTA	SHIFT REG	66- 50
123	14194	MC14194BCP	MOTA	SHIFT REG	66- 51
124	14194	HD14194B	HITJ	SHIFT REG	66- 45
125	14505	MCM14505BAL	MOTA	RAM	21- 43
126	14505	MCM14505BCL	MOTA	RAM	21- 44
127	14505	MCM14505BCP	MOTA	RAM	21- 45
128	14505	HD14505B	HITJ	RAM	21- 42
129	14517	MC14517BAL	MOTA	SHIFT REG	84- 68
130	14517	MC14517BCL	MOTA	SHIFT REG	84- 69
131	14517	MC14517BCP	MOTA	SHIFT REG	84- 70
132	14517	HD14517B	HITJ	SHIFT REG	84- 67
133	14524	MCM14524AL	MOTA	ROM	47- 89
134	14524	MCM14524CL	MOTA	ROM	47- 90
135	14524	MCM14524CP	MOTA	ROM	47- 91
136	14524	HD14524B	HITJ	ROM	47- 58
137	14537	MCM14537AL	MOTA	RAM	23-109
138	14537	MCM14537CL	MOTA	RAM	23-110
139	14537	HD14537B	HITJ	RAM	23-107
140	14552	MCM14552AL	MOTA	RAM	21- 51
141	14552	MCM14552CL	MOTA	RAM	21- 52
142	14552	MCM14552CP	MOTA	RAM	21- 53
143	14552	HD14552B	HITJ	RAM	21- 54
144	14557	MC14557BAL	MOTA	SHIFT REG	84- 42
145	14557	MC14557BCL	MOTA	SHIFT REG	84- 43
146	14557	MC14557BCP	MOTA	SHIFT REG	84- 44
147	14557	HD14557B	HITJ	SHIFT REG	84- 41
148	14562	MC14562BAL	MOTA	SHIFT REG	85- 20
149	14562	MC14562BCL	MOTA	SHIFT REG	85- 21
150	14562	MC14562BCP	MOTA	SHIFT REG	85- 22
151	14562	MC14562CL	MOTA	SHIFT REG	85- 24
152	14562	MC14562CP	MOTA	SHIFT REG	85- 25
153	14562	HD14562B	HITJ	SHIFT REG	85- 19
154	14580	MC14580BAL	MOTA	RAM	18- 80
155	14580	MC14580BCL	MOTA	RAM	18- 82
156	14580	MC14580BCP	MOTA	RAM	18- 83
157	14580	HD14580B	HITJ	RAM	18- 81
158	15370	SN15370J	TII	SHIFT REG	65- 35
159	15370	SN15370N	TII	SHIFT REG	65- 36
160	21143	L21143MA	EMM	RAM	36- 72
161	21143	21143MA	EMM	RAM	36- 53
162	21143	N21143MA	EMM	RAM	36- 73
163	25044	HN25044	HITJ	ROM	53- 85
164	25045	HN25045	HITJ	ROM	53- 86
165	25084	HN25084	HITJ	ROM	57- 5
166	25085	HN25085	HITJ	ROM	57- 6
167	25088	HN25088	HITJ	ROM	55- 38
168	25089	HN25089	HITJ	ROM	55- 39
169	29100	MC29100LC	MOTA	SPECIAL	87- 84
170	29100	MC29100LM	MOTA	SPECIAL	87- 85
171	29101	MC29101LC	MOTA	SPECIAL	87- 86
172	29101	MC29101LM	MOTA	SPECIAL	87- 87
173	29611	29611DC	RTN	ROM	50- 26
174	29611	29611DM	RTN	ROM	50- 46
175	29611	29611FM	RTN	ROM	50- 47
176	29613	29613DC	RTN	ROM	50- 35
177	29613	29613DM	RTN	ROM	50- 52
178	29613	29613FM	RTN	ROM	50- 53
179	29621	29621DC	RTN	ROM	52- 23
180	29621	29621DM	RTN	ROM	52- 56
181	29621	29621FM	RTN	ROM	52- 57
182	29623	29623DC	RTN	ROM	52- 32
183	29623	29623DM	RTN	ROM	52- 58
184	29623	29623FM	RTN	ROM	52- 59
185	29631	29631ADC	RTN	ROM	53-104
186	29631	29631ADM	RTN	ROM	54- 2
187	29631	29631AFM	RTN	ROM	55- 32
188	29631	29631DC	RTN	ROM	55- 12
189	29631	29631DM	RTN	ROM	55- 13
190	29631	29631FM	RTN	ROM	55- 23
191	29633	29633ADC	RTN	ROM	54- 1
192	29633	29633ADM	RTN	ROM	54- 3
193	29633	29633AFM	RTN	ROM	55- 50
194	29633	29633DC	RTN	ROM	55- 24
195	29633	29633DM	RTN	ROM	55- 25
196	29633	29633FM	RTN	ROM	55- 31
197	29635	29635DC	RTN	ROM	55- 14
198	29635	29635DM	RTN	ROM	55- 15
199	29637	29637DC	RTN	ROM	55- 26
200	29637	29637DM	RTN	ROM	55- 27
201	29651	29651ADC	RTN	ROM	56- 82
202	29651	29651ADM	RTN	ROM	56- 84
203	29651	29651AFM	RTN	ROM	56-107
204	29651	29651DC	RTN	ROM	57- 8
205	29651	29651DM	RTN	ROM	57- 14
206	29651	29651FM	RTN	ROM	57- 12
207	29653	29653ADC	RTN	ROM	56- 83
208	29653	29653ADM	RTN	ROM	56- 85
209	29653	29653AFM	RTN	ROM	57- 7
210	29653	29653DC	RTN	ROM	57- 11
211	29653	29653DM	RTN	ROM	57- 15
212	29653	29653FM	RTN	ROM	57- 13
213	29681	29681ADC	RTN	ROM	58- 50
214	29681	29681ADM	RTN	ROM	58- 63
215	29681	29681AFM	RTN	ROM	57- 37
216	29681	29681ASC	RTN	ROM	58- 51
217	29681	29681ASM	RTN	ROM	58- 64
218	29681	29681DC	RTN	ROM	58- 69
219	29681	29681DM	RTN	ROM	58- 83
220	29681	29681FM	RTN	ROM	57- 39

SYMBOLS AND CODES EXPLAINED IN INTERPRETER

GENERIC PRODUCT INDEX

IN ORDER OF: (1)GENERIC NO. (2)MFR TYPE NO.

LINE No.	1 GENERIC NO.	2 MANUFACTURER TYPE NO.	MFR. CODE	PRODUCT CLASS	PAGE & LINE
1	29681	29681SC	RTN	ROM	58- 70
2	29681	29681SM	RTN	ROM	58- 84
3	29683	29683ADC	RTN	ROM	58- 52
4	29683	29683ADM	RTN	ROM	58- 67
5	29683	29683AFM	RTN	ROM	57- 38
6	29683	29683ASC	RTN	ROM	58- 53
7	29683	29683ASM	RTN	ROM	58- 68
8	29683	29683DC	RTN	ROM	58- 80
9	29683	29683DM	RTN	ROM	58- 87
10	29683	29683FM	RTN	ROM	57- 40
11	29683	29683SC	RTN	ROM	58- 71
12	29683	29683SM	RTN	ROM	58- 88
13	29693	29693DC	RTN	SPECIAL	88- 6
14	29693	29693DM	RTN	SPECIAL	88- 7
15	29693	29693FM	RTN	SPECIAL	88- 8
16	29720	AM29720DM	AMD	RAM	22- 69
17	29720	AM29720FM	AMD	RAM	22- 70
18	29720	AM29720PC	AMD	RAM	22- 71
19	29721	AM29721DC	AMD	RAM	22- 72
20	29721	AM29721DM	AMD	RAM	22- 73
21	29721	AM29721FM	AMD	RAM	22- 74
22	29721	AM29721PC	AMD	RAM	22- 75
23	31013	AM31013	AMD	RAM	20- 50
24	31013	C31013	AMD	RAM	20- 67
25	31013	31013E	AMD	RAM	20- 19
26	33511	33511DC	FSC	SHIFT REG	84- 17
27	33512	33512DC	FSC	SHIFT REG	84- 15
28	33571	33571	FSC	SHIFT REG	84-107
29	33572	33572	FSC	SHIFT REG	84-104
30	34000	MK34000J-3	MOS	ROM	59- 31
31	34000	MK34000N-3	MOS	ROM	57-106
32	34000	MK34000P-3	MOS	ROM	58- 1
33	34014	34014DC	FSC	SHIFT REG	77- 59
34	34014	34014DM	FSC	SHIFT REG	77- 60
35	34014	34014FC	FSC	SHIFT REG	77- 61
36	34014	34014FM	FSC	SHIFT REG	77- 62
37	34014	34014PC	FSC	SHIFT REG	77- 63
38	34015	34015DC	FSC	SHIFT REG	73- 74
39	34015	34015DM	FSC	SHIFT REG	73- 75
40	34015	34015FC	FSC	SHIFT REG	73- 76
41	34015	34015FM	FSC	SHIFT REG	73- 77
42	34015	34015PC	FSC	SHIFT REG	73- 78
43	34021	34021DC	FSC	SHIFT REG	80- 48
44	34021	34021DM	FSC	SHIFT REG	80- 49
45	34021	34021FC	FSC	SHIFT REG	80- 50
46	34021	34021FM	FSC	SHIFT REG	80- 51
47	34021	34021PC	FSC	SHIFT REG	80- 52
48	34035	34035DC	FSC	SHIFT REG	66-102
49	34035	34035DM	FSC	SHIFT REG	67- 1
50	34035	34035FC	FSC	SHIFT REG	67- 2
51	34035	34035FM	FSC	SHIFT REG	67- 3
52	34035	34035PC	FSC	SHIFT REG	67- 4
53	34073	MK34073N-3	MOS	CHAR GEN	62- 21
54	34073	MK34073P-3	MOS	CHAR GEN	62- 22
55	34720	34720DC	FSC	RAM	23- 88
56	34720	34720DM	FSC	RAM	23- 89
57	34720	34720FC	FSC	RAM	23- 90
58	34720	34720FM	FSC	RAM	23- 91
59	34720	34720PC	FSC	RAM	23- 92
60	34725	34725DC	FSC	RAM	20-101
61	34725	34725DM	FSC	RAM	20-102
62	34725	34725FC	FSC	RAM	20-103
63	34725	34725FM	FSC	RAM	20-104
64	34725	34725PC	FSC	RAM	20-105
65	35141	AM35141DC	AMD	ROM	51- 41
66	35142	AM35142DC	AMD	ROM	51- 42
67	35391	35391CD	EMM	RAM	27- 74
68	35391	35391CP	EMM	RAM	27- 75
69	35391	35391DC	FSC	RAM	27- 71
70	35392	35392CD	EMM	RAM	27- 76
71	35392	35392CP	EMM	RAM	27- 77
72	35392	35392DC	FSC	RAM	27- 72
73	36000	MK36000N-4	MOS	ROM	60- 72
74	36000	MK36000N-5	MOS	ROM	60- 73
75	36000	MK36000P-4	MOS	ROM	60- 74
76	36000	MK36000P-5	MOS	ROM	60- 78
77	36000	MKB36000P-80	MOS	ROM	60- 56
78	36000	MKB36000P-84	MOS	ROM	60- 60
79	36000	ROM36000	SMC	ROM	60- 77
80	36000	M36000-4B1	SGAI	ROM	60- 53
81	36000	M36000-4D1	SGAI	ROM	60- 54
82	36000	M36000-4F1	SGAI	ROM	60- 55
83	36000	M36000-5B1	SGAI	ROM	60- 57
84	36000	M36000-5D1	SGAI	ROM	60- 58
85	36000	M36000-5F1	SGAI	ROM	60- 59
86	37000	MK37000J-4	MOS	ROM	60- 75
87	37000	MK37000J-5	MOS	ROM	60- 79
88	37000	MK37000N-4	MOS	ROM	60- 76
89	37000	MK37000N-5	MOS	ROM	60- 80
90	37000	MK37000P-5	MOS	ROM	60- 81
91	40061	CD40061AD	RCA	RAM	23- 93
92	40061	CD40061AE	RCA	RAM	23- 94
93	40061	CD40061AH	RCA	RAM	23- 95
94	40061	CD40061E	RCA	RAM	23- 96
95	40100	CD40100BD	RCA	SHIFT REG	83-107
96	40100	CD40100BE	RCA	SHIFT REG	83-108
97	40100	CD40100BF	RCA	SHIFT REG	83-109
98	40100	CD40100BH	RCA	SHIFT REG	83-110
99	40100	HCC40100BD	SGAI	SHIFT REG	65- 9
100	40100	HCC40100BF	SGAI	SHIFT REG	65- 10
101	40100	HCC40100BK	SGAI	SHIFT REG	65- 11
102	40100	HCF40100BE	SGAI	SHIFT REG	65- 12
103	40100	HCF40100BF	SGAI	SHIFT REG	65- 13
104	40104	CD40104BD#	RCA	SHIFT REG	65- 17
105	40104	CD40104BE#	RCA	SHIFT REG	65- 18
106	40104	CD40104BF#	RCA	SHIFT REG	65- 19
107	40104	CD40104BH#	RCA	SHIFT REG	65- 26
108	40105	CD40105BD	RCA	SHIFT REG	83- 87
109	40105	CD40105BE	RCA	SHIFT REG	83- 88
110	40105	CD40105BF	RCA	SHIFT REG	83- 89
111	40105	CD40105BH	RCA	SHIFT REG	83- 81
112	40105	HCC40105BD	SGAI	SHIFT REG	83- 82
113	40105	HCC40105BF	SGAI	SHIFT REG	83- 83
114	40105	HCC40105BK	SGAI	SHIFT REG	83- 84
115	40105	HCF40105BE	SGAI	SHIFT REG	83- 85
116	40105	HCF40105BF	SGAI	SHIFT REG	83- 86
117	40108	CD40108BD	RCA	RAM	18- 72
118	40108	CD40108BE	RCA	RAM	18- 73
119	40108	CD40108BF	RCA	RAM	18- 79
120	40108	CD40108BH	RCA	RAM	18- 74
121	40109	CD40109BD	RCA	SHIFT REG	65- 1
122	40109	CD40109BE	RCA	SHIFT REG	65- 2
123	40109	CD40109BF	RCA	SHIFT REG	65- 3
124	40109	CD40109BH	RCA	SHIFT REG	65- 4
125	40114	CD40114BD	RCA	RAM	21- 4
126	40114	CD40114BE	RCA	RAM	21- 5
127	40114	CD40114BF	RCA	RAM	21- 6
128	40114	CD40114BH	RCA	RAM	21- 7
129	40174	HEF40174B	VALG	SHIFT REG	76- 8
130	40174	HEF40174BD	PHIN	SHIFT REG	76- 9
131	40174	HEF40174BP	PHIN	SHIFT REG	76- 10
132	40174	HEF40174P	VALG	SHIFT REG	75- 94
133	40174	CD40174BH	RCA	SHIFT REG	76- 2
134	40175	HEF40175B	VALG	SHIFT REG	67- 86
135	40175	HEF40175BD	PHIN	SHIFT REG	68- 64
136	40175	HEF40175BP	PHIN	SHIFT REG	68- 65
137	40175	HEF40175P	VALG	SHIFT REG	65- 89
138	40194	HEF40194B	VALG	SHIFT REG	65- 90
139	40194	HEF40194BD	MULB	SHIFT REG	68- 66
140	40194	HEF40194BD	PHIN	SHIFT REG	68- 66
141	40194	HEF40194BP	MULB	SHIFT REG	68- 67
142	40194	HEF40194BP	PHIN	SHIFT REG	68- 67
143	40194	HEF40194BT	PHIN	SHIFT REG	68- 68
144	40194	HEF40194P	VALG	SHIFT REG	67- 5
145	40194	CD40194BE#	RCA	SHIFT REG	65- 20
146	40194	CD40194BF#	RCA	SHIFT REG	65- 21
147	40194	CD40194BH#	RCA	SHIFT REG	65- 27
148	40194	40194BDC	FSC	SHIFT REG	66- 90
149	40194	40194BDM	FSC	SHIFT REG	66- 91
150	40194	40194BFC	FSC	SHIFT REG	66- 92
151	40194	40194BFM	FSC	SHIFT REG	66- 93
152	40194	40194BPC	FSC	SHIFT REG	66- 94
153	40195	HEF40195B	VALG	SHIFT REG	65- 91
154	40195	HEF40195BD	MULB	SHIFT REG	68- 23
155	40195	HEF40195BD	PHIN	SHIFT REG	68- 23
156	40195	HEF40195BP	MULB	SHIFT REG	68- 24
157	40195	HEF40195BP	PHIN	SHIFT REG	68- 24
158	40195	HEF40195BT	PHIN	SHIFT REG	68- 25
159	40195	HEF40195P	VALG	SHIFT REG	67- 6
160	40195	40195BDC	FSC	SHIFT REG	66- 95
161	40195	40195BDM	FSC	SHIFT REG	66- 96
162	40195	40195BFC	FSC	SHIFT REG	66- 97
163	40195	40195BFM	FSC	SHIFT REG	66- 98
164	40195	40195BPC	FSC	SHIFT REG	66- 99
165	40208	CD40208BD	RCA	RAM	18- 75
166	40208	CD40208BE	RCA	RAM	18- 76
167	40208	CD40208BF	RCA	RAM	18- 77
168	40208	CD40208BH	RCA	RAM	18- 78
169	41046	uPD41046-35	NECM	RAM	42- 2
170	46332	HN46332P	HITJ	ROM	60- 44
171	46532	HN46532-2	HITJ	ROM	59- 61
172	46532	HN46532-3	HITJ	ROM	59- 74
173	46532	HN46532P-2	HITJ	ROM	59- 70
174	46532	HN46532P-3	HITJ	ROM	59- 73
175	46810	HM46810	HITJ	RAM	22- 31
176	46810	HM46810P	HITJ	RAM	22- 32
177	46830	HN46830	HITJ	ROM	56- 47
178	46830	HN46830P	HITJ	ROM	56- 48
179	46846	HD46846	HITJ	SPECIAL	88- 43
180	46846	HD46846P	HITJ	SPECIAL	88- 44
181	48016	HN48016P	HITJ	ROM	59- 18
182	48364	HN48364P	HITJ	ROM	61- 15
183	52116	MM52116D	NSC	ROM	58- 9
184	52116	MM52116FDWD	NSC	CHAR GEN	63- 24
185	52116	MM52116FDWN	NSC	CHAR GEN	63- 25
186	52116	MM52116FDXD	NSC	CHAR GEN	63- 29
187	52116	MM52116FDXN	NSC	CHAR GEN	63- 30
188	52116	MM52116N	NSC	ROM	58- 10
189	52132	MM52132D	NSC	ROM	59- 62
190	52132	MM52132N	NSC	ROM	59- 63
191	52164	MM52164D	NSC	ROM	60- 85
192	52164	MM52164N	NSC	ROM	60- 86
193	53284	M53284P	MITJ	RAM	18- 52
194	53289	M53289P	MITJ	RAM	20- 83
195	53291	M53291P	MITJ	SHIFT REG	82- 61
196	53295	M53295P	MITJ	SHIFT REG	68- 56
197	53296	M53296P	MITJ	SHIFT REG	74- 74
198	53364	M53364P	MITJ	SHIFT REG	77-110
199	53365	M53365P	MITJ	SHIFT REG	77- 79
200	53366	M53366P	MITJ	SHIFT REG	80- 79
201	53370	M53370P	MITJ	RAM	18- 53
202	53374	M53374P	MITJ	SHIFT REG	76- 19
203	53375	M53375P	MITJ	SHIFT REG	69- 78
204	53398	M53398P	MITJ	SHIFT REG	78- 1
205	53399	M53399P	MITJ	SHIFT REG	78- 2
206	53478	M53478P	MITJ	SHIFT REG	65- 58
207	54164	SN54164J	AMD	SHIFT REG	81- 84
208	54164	SN54164J	TII	SHIFT REG	81- 84
209	54164	SN54164W	AMD	SHIFT REG	81- 85
210	54164	SN54164W	TII	SHIFT REG	81- 85
211	54164	RC54164A	MULB	SHIFT REG	81- 80
212	54164	RC54164F	MULB	SHIFT REG	81- 81
213	54164	S54164A	PHIN	SHIFT REG	81- 82
214	54164	S54164A	SIC	SHIFT REG	81- 82
215	54164	S54164F	PHIN	SHIFT REG	81- 83
216	54164	S54164F	SIC	SHIFT REG	81- 83
217	54164	S54164F	VALG	SHIFT REG	81- 83
218	54164	ZN54164E	FERB	SHIFT REG	81- 88
219	54164	ZN54164J	FERB	SHIFT REG	81- 89
220	54164	54164DM	FSC	SHIFT REG	81- 59

SYMBOLS AND CODES EXPLAINED IN INTERPRETER

GENERIC PRODUCT INDEX

IN ORDER OF: (1)GENERIC NO. (2)MFR TYPE NO.

LINE No.	1 GENERIC NO.	2 MANUFACTURER TYPE NO.	MFR. CODE	PRODUCT CLASS	PAGE & LINE
1	54164	54164FM	FSC	SHIFT REG	81- 60
2	54165	SN54165J	TII	SHIFT REG	80- 60
3	54165	SN54165W	TII	SHIFT REG	80- 61
4	54165	RC54165B	MULB	SHIFT REG	77- 82
5	54165	RC54165F	MULB	SHIFT REG	77- 83
6	54165	RC54165W	MULB	SHIFT REG	77- 84
7	54165	MC54165F	MOTA	SHIFT REG	80- 57
8	54165	MC54165L	MOTA	SHIFT REG	80- 58
9	54165	S54165B	PHIN	SHIFT REG	77- 85
10	54165	S54165B	SIC	SHIFT REG	77- 85
11	54165	S54165F	PHIN	SHIFT REG	77- 86
12	54165	S54165F	SIC	SHIFT REG	77- 86
13	54165	S54165F	VALG	SHIFT REG	77- 86
14	54165	S54165W	PHIN	SHIFT REG	77- 87
15	54165	S54165W	SIC	SHIFT REG	77- 87
16	54165	S54165W	VALG	SHIFT REG	77- 87
17	54165	ZN54165E	FERB	SHIFT REG	80- 64
18	54165	ZN54165J	FERB	SHIFT REG	80- 65
19	54165	54165DM	FSC	SHIFT REG	77- 74
20	54165	54165FM	FSC	SHIFT REG	77- 75
21	54166	SN54166J	TII	SHIFT REG	80- 82
22	54166	SN54166W	TII	SHIFT REG	80- 83
23	54166	RC54166B	MULB	SHIFT REG	78- 8
24	54166	RC54166F	MULB	SHIFT REG	78- 9
25	54166	RC54166W	MULB	SHIFT REG	78- 10
26	54166	S54166B	PHIN	SHIFT REG	78- 17
27	54166	S54166B	SIC	SHIFT REG	78- 17
28	54166	S54166F	PHIN	SHIFT REG	78- 18
29	54166	S54166F	SIC	SHIFT REG	78- 18
30	54166	S54166F	VALG	SHIFT REG	78- 18
31	54166	S54166W	PHIN	SHIFT REG	78- 19
32	54166	S54166W	SIC	SHIFT REG	78- 19
33	54166	S54166W	VALG	SHIFT REG	78- 19
34	54166	ZN54166J	FERB	SHIFT REG	80- 86
35	54166	54166DM	FSC	SHIFT REG	77- 89
36	54166	54166FM	FSC	SHIFT REG	77- 90
37	54170	SN54170J	TII	RAM	18- 60
38	54170	SN54170W	TII	RAM	18- 61
39	54170	RC54170B	MULB	RAM	18- 29
40	54170	RC54170F	MULB	RAM	18- 30
41	54170	RC54170W	MULB	RAM	18- 31
42	54170	S54170B	PHIN	RAM	18- 32
43	54170	S54170B	SIC	RAM	18- 32
44	54170	S54170F	PHIN	RAM	18- 33
45	54170	S54170F	SIC	RAM	18- 33
46	54170	S54170F	VALG	RAM	18- 33
47	54170	S54170W	PHIN	RAM	18- 34
48	54170	S54170W	SIC	RAM	18- 34
49	54170	S54170W	VALG	RAM	18- 34
50	54170	54170DM	FSC	RAM	18- 45
51	54170	54170FM	FSC	RAM	18- 46
52	54174	SN54174J	TII	SHIFT REG	76- 27
53	54174	SN54174W	TII	SHIFT REG	76- 28
54	54174	S54174F	PHIN	SHIFT REG	76- 22
55	54174	S54174F	SIC	SHIFT REG	76- 22
56	54174	S54174F	VALG	SHIFT REG	76- 22
57	54174	S54174W	PHIN	SHIFT REG	76- 23
58	54174	S54174W	SIC	SHIFT REG	76- 23
59	54174	S54174W	VALG	SHIFT REG	76- 23
60	54174	ZN54174E	FERB	SHIFT REG	76- 31
61	54174	ZN54174J	FERB	SHIFT REG	76- 32
62	54175	SN54175J	TII	SHIFT REG	70- 20
63	54175	SN54175W	TII	SHIFT REG	70- 21
64	54175	S54175F	PHIN	SHIFT REG	70- 6
65	54175	S54175F	SIC	SHIFT REG	70- 6
66	54175	S54175F	VALG	SHIFT REG	70- 6
67	54175	S54175W	PHIN	SHIFT REG	70- 7
68	54175	S54175W	SIC	SHIFT REG	70- 7
69	54175	S54175W	VALG	SHIFT REG	70- 7
70	54175	ZN54175E	FERB	SHIFT REG	70- 40
71	54175	ZN54175J	FERB	SHIFT REG	70- 41
72	54178	SN54178J	TII	SHIFT REG	70- 22
73	54178	SN54178W	TII	SHIFT REG	70- 23
74	54178	RC54178A	MULB	SHIFT REG	67- 38
75	54178	RC54178F	MULB	SHIFT REG	67- 39
76	54178	RC54178W	MULB	SHIFT REG	67- 40
77	54178	S54178A	PHIN	SHIFT REG	67- 52
78	54178	S54178A	SIC	SHIFT REG	67- 52
79	54178	S54178F	PHIN	SHIFT REG	67- 53
80	54178	S54178F	SIC	SHIFT REG	67- 53
81	54178	S54178W	PHIN	SHIFT REG	67- 54
82	54178	S54178W	SIC	SHIFT REG	67- 54
83	54178	54178DM	FSC	SHIFT REG	69- 53
84	54178	54178FM	FSC	SHIFT REG	69- 54
85	54179	SN54179J	TII	SHIFT REG	70- 24
86	54179	SN54179W	TII	SHIFT REG	70- 25
87	54179	RC54179B	MULB	SHIFT REG	67- 41
88	54179	RC54179F	MULB	SHIFT REG	67- 42
89	54179	RC54179W	MULB	SHIFT REG	67- 43
90	54179	S54179B	PHIN	SHIFT REG	67- 55
91	54179	S54179B	SIC	SHIFT REG	67- 55
92	54179	S54179F	PHIN	SHIFT REG	67- 56
93	54179	S54179F	SIC	SHIFT REG	67- 56
94	54179	S54179W	PHIN	SHIFT REG	67- 57
95	54179	S54179W	SIC	SHIFT REG	67- 57
96	54179	54179DM	FSC	SHIFT REG	69- 55
97	54179	54179FM	FSC	SHIFT REG	69- 56
98	54184	SN54184J	TII	CODE CONV	64- 70
99	54184	SN54184W	TII	CODE CONV	64- 71
100	54185	SN54185AJ	TII	CODE CONV	64- 76
101	54185	SN54185AW	TII	CODE CONV	64- 77
102	54194	SN54194J	AMD	SHIFT REG	70- 26
103	54194	SN54194J	TII	SHIFT REG	70- 26
104	54194	SN54194W	AMD	SHIFT REG	70- 27
105	54194	SN54194W	TII	SHIFT REG	70- 27
106	54194	RC54194B	MULB	SHIFT REG	69- 93
107	54194	RC54194F	MULB	SHIFT REG	69- 94
108	54194	RC54194W	MULB	SHIFT REG	70- 1
109	54194	S54194B	PHIN	SHIFT REG	70- 8
110	54194	S54194B	SIC	SHIFT REG	70- 8
111	54194	S54194B	VALG	SHIFT REG	70- 8
112	54194	S54194F	PHIN	SHIFT REG	70- 9
113	54194	S54194F	SIC	SHIFT REG	70- 9
114	54194	S54194F	VALG	SHIFT REG	70- 9
115	54194	S54194W	PHIN	SHIFT REG	70- 10
116	54194	S54194W	SIC	SHIFT REG	70- 10
117	54194	S54194W	VALG	SHIFT REG	70- 10
118	54194	ZN54194E	FERB	SHIFT REG	70- 42
119	54194	ZN54194J	FERB	SHIFT REG	70- 43
120	54194	54194DM	FSC	SHIFT REG	69- 57
121	54194	54194FM	FSC	SHIFT REG	69- 58
122	54195	SN54195J	AMD	SHIFT REG	71- 83
123	54195	SN54195J	TII	SHIFT REG	71- 83
124	54195	SN54195N	TII	SHIFT REG	71- 84
125	54195	SN54195W	AMD	SHIFT REG	71- 85
126	54195	SN54195W	TII	SHIFT REG	71- 85
127	54195	RC54195B	MULB	SHIFT REG	71- 70
128	54195	RC54195F	MULB	SHIFT REG	71- 71
129	54195	RC54195W	MULB	SHIFT REG	71- 72
130	54195	MC54195L	MOTA	SHIFT REG	71- 53
131	54195	S54195B	PHIN	SHIFT REG	71- 80
132	54195	S54195B	SIC	SHIFT REG	71- 80
133	54195	S54195F	PHIN	SHIFT REG	71- 81
134	54195	S54195F	SIC	SHIFT REG	71- 81
135	54195	S54195F	VALG	SHIFT REG	71- 81
136	54195	S54195W	PHIN	SHIFT REG	71- 82
137	54195	S54195W	SIC	SHIFT REG	71- 82
138	54195	S54195W	VALG	SHIFT REG	71- 82
139	54195	54195DM	FSC	SHIFT REG	71- 46
140	54195	54195FM	FSC	SHIFT REG	71- 47
141	54198	SN54198J	TII	SHIFT REG	78- 28
142	54198	SN54198W	TII	SHIFT REG	78- 29
143	54198	RC54198F	MULB	SHIFT REG	78- 11
144	54198	RC54198N	MULB	SHIFT REG	78- 12
145	54198	RC54198Q	MULB	SHIFT REG	78- 13
146	54198	S54198F	PHIN	SHIFT REG	78- 20
147	54198	S54198F	SIC	SHIFT REG	78- 20
148	54198	S54198F	VALG	SHIFT REG	78- 20
149	54198	S54198N	PHIN	SHIFT REG	78- 21
150	54198	S54198N	SIC	SHIFT REG	78- 21
151	54198	S54198Q	PHIN	SHIFT REG	78- 22
152	54198	S54198Q	SIC	SHIFT REG	78- 22
153	54198	S54198Q	VALG	SHIFT REG	78- 22
154	54198	S54198W	PHIN	SHIFT REG	78- 23
155	54198	S54198W	SIC	SHIFT REG	78- 23
156	54198	S54198W	VALG	SHIFT REG	78- 23
157	54198	54198DM	FSC	SHIFT REG	77- 91
158	54198	54198FM	FSC	SHIFT REG	77- 92
159	54199	SN54199J	TII	SHIFT REG	78- 30
160	54199	SN54199W	TII	SHIFT REG	78- 31
161	54199	RC54199F	MULB	SHIFT REG	78- 14
162	54199	RC54199N	MULB	SHIFT REG	78- 15
163	54199	RC54199Q	MULB	SHIFT REG	78- 16
164	54199	S54199F	PHIN	SHIFT REG	78- 24
165	54199	S54199F	SIC	SHIFT REG	78- 24
166	54199	S54199F	VALG	SHIFT REG	78- 24
167	54199	S54199N	PHIN	SHIFT REG	78- 25
168	54199	S54199N	SIC	SHIFT REG	78- 25
169	54199	S54199Q	PHIN	SHIFT REG	78- 26
170	54199	S54199Q	SIC	SHIFT REG	78- 26
171	54199	S54199W	SIC	SHIFT REG	78- 27
172	54199	S54199W	VALG	SHIFT REG	78- 27
173	54199	54199DM	FSC	SHIFT REG	77- 93
174	54199	54199FM	FSC	SHIFT REG	77- 94
175	54273	SN54273J	TII	SHIFT REG	78- 76
176	54278	SN54278J	TII	SHIFT REG	65- 65
177	54278	SN54278W	TII	SHIFT REG	65- 66
178	54298	S54298F	PHIN	SHIFT REG	70- 11
179	54298	S54298F	SIC	SHIFT REG	70- 11
180	54298	S54298F	VALG	SHIFT REG	70- 11
181	54298	S54298W	PHIN	SHIFT REG	70- 12
182	54298	S54298W	SIC	SHIFT REG	70- 12
183	54298	S54298W	VALG	SHIFT REG	70- 12
184	54376	SN54376J	TII	SHIFT REG	71- 86
185	54376	SN54376W	TII	SHIFT REG	71- 87
186	54700	M54700K	MITJ	ROM	47- 56
187	54700	M54700P	MITJ	ROM	47- 57
188	54700	M54700S	MITJ	ROM	49- 47
189	54730	M54730K	MITJ	ROM	46- 18
190	54730	M54730P	MITJ	ROM	46- 19
191	54730	M54730S	MITJ	ROM	46- 91
192	57401	57401J16	MMI	SHIFT REG	84- 92
193	58333	M58333-XXXP	MITJ	ROM	59- 58
194	58334	M58334-XXXP	MITJ	ROM	60- 46
195	58725	M58725P	MITJ	RAM	38- 12
196	58725	M58725P-15	MITJ	RAM	38- 8
197	58725	M58725S	MITJ	RAM	38- 13
198	58725	M58725S-15	MITJ	RAM	37-105
199	58764	M58764S20	MITJ	RAM	45- 45
200	58981	M58981P	MITJ	RAM	33- 30
201	58981	M58981S-45	MITJ	RAM	33- 31
202	65253	UC65253K#1	SOD	ROM	47- 37
203	65253	UC65253K#2	SOD	ROM	49- 76
204	65253	UC65253K#3	SOD	ROM	47- 94
205	65253	UC65253K#4	SOD	ROM	52-108
206	65254	UC65254K#1	SOD	ROM	47- 38
207	65254	UC65254K#2	SOD	ROM	49- 77
208	65254	UC65254K#3	SOD	ROM	47- 95
209	65254	UC65254K#4	SOD	ROM	52-109
210	65308	MCM65308L	MOTA	ROM	54- 89
211	65308	MCM65308P	MOTA	ROM	54- 90
212	65317	MCM65317L	MOTA	ROM	58- 13
213	65317	MCM65317P	MOTA	ROM	58- 14
214	65723	UC65723K	SOD	ROM	49- 68
215	66700	MCM66700C	MOTA	CHAR GEN	63- 27
216	66700	MCM66700P	MOTA	CHAR GEN	63- 28
217	66710	MCM66710C	MOTA	CHAR GEN	62- 71
218	66710	MCM66710P	MOTA	CHAR GEN	62- 72
219	66714	MCM66714C	MOTA	CHAR GEN	62- 73
220	66714	MCM66714P	MOTA	CHAR GEN	62- 74

SYMBOLS AND CODES EXPLAINED IN INTERPRETER

GENERIC PRODUCT INDEX

IN ORDER OF: (1)GENERIC NO. (2)MFR TYPE NO.

LINE No.	1 GENERIC NO.	2 MANUFACTURER TYPE NO.	MFR. CODE	PRODUCT CLASS	PAGE & LINE
1	66720	MCM66720C	MOTA	CHAR GEN	62- 75
2	66720	MCM66720P	MOTA	CHAR GEN	62- 76
3	66730	MCM66730C	MOTA	CHAR GEN	62- 77
4	66730	MCM66730P	MOTA	CHAR GEN	62- 78
5	66734	MCM66734C	MOTA	CHAR GEN	62- 79
6	66734	MCM66734L	MOTA	CHAR GEN	63- 45
7	66734	MCM66734P	MOTA	CHAR GEN	62- 80
8	66740	MCM66740C	MOTA	CHAR GEN	62- 81
9	66740	MCM66740P	MOTA	CHAR GEN	62- 82
10	66750	MCM66750C	MOTA	CHAR GEN	62- 83
11	66750	MCM66750P	MOTA	CHAR GEN	62- 84
12	66751	MCM66751C	MOTA	CHAR GEN	62- 85
13	66751	MCM66751P	MOTA	CHAR GEN	62- 86
14	66760	MCM66760C	MOTA	CHAR GEN	62- 87
15	66760	MCM66760P	MOTA	CHAR GEN	62- 88
16	66770	MCM66770C	MOTA	CHAR GEN	62- 89
17	66770	MCM66770P	MOTA	CHAR GEN	62- 90
18	66780	MCM66780C	MOTA	CHAR GEN	62- 91
19	66780	MCM66780P	MOTA	CHAR GEN	62- 92
20	66790	MCM66790C	MOTA	CHAR GEN	62- 93
21	66790	MCM66790P	MOTA	CHAR GEN	62- 94
22	67401	67401J16	MMI	SHIFT REG	84- 93
23	67402	67402J18	MMI	SHIFT REG	84- 98
24	68308	MCM68308L	MOTA	ROM	54- 96
25	68308	MCM68308P	MOTA	ROM	54- 97
26	68316	MCM68316EL	MOTA	ROM	58- 15
27	68316	MCM68316EP	MOTA	ROM	58- 16
28	68317	MCM68317L	MOTA	ROM	58- 43
29	68317	MCM68317P	MOTA	ROM	58- 44
30	68332	MCM68332L	MOTA	ROM	59- 71
31	68332	MCM68332P	MOTA	ROM	59- 72
32	68708	MCM68708C	MOTA	ROM	56- 26
33	68708	MCM68708L	MOTA	ROM	56- 27
34	68732	MCM68732C0	MOTA	ROM	60- 23
35	68732	MCM68732C1	MOTA	ROM	60- 24
36	68732	MCM68732C	MOTA	ROM	60- 25
37	68732	MCM68732L1	MOTA	ROM	60- 26
38	68732	MCM68732L	MOTA	ROM	60- 27
39	68764	MCM68764C	MOTA	ROM	61- 16
40	68764	MCM68764L	MOTA	ROM	61- 17
41	70301	SFC70301K	NPC	ROM	47- 59
42	70301	SFC70301K	THCF	ROM	47- 59
43	70301	SFC70301KM	NPC	ROM	47- 60
44	70301	SFC70301KM	THCF	ROM	47- 60
45	70301	SFC70301KT	NPC	ROM	47- 61
46	70301	SFC70301KT	THCF	ROM	47- 61
47	70611	SFF70611KM#1	NPC	ROM	49- 24
48	70611	SFF70611KM#1	THCF	ROM	49- 24
49	70611	SFF70611KM#2	NPC	ROM	50- 6
50	70611	SFF70611KM#2	THCF	ROM	50- 6
51	70611	SFF70611KT#1	NPC	ROM	49- 25
52	70611	SFF70611KT#1	THCF	ROM	49- 25
53	70611	SFF70611KT#2	NPC	ROM	50- 7
54	70611	SFF70611KT#2	THCF	ROM	50- 7
55	70612	SFF70612KM#1	NPC	ROM	51- 89
56	70612	SFF70612KM#1	THCF	ROM	51- 89
57	70612	SFF70612KM#2	NPC	ROM	53- 34
58	70612	SFF70612KM#2	THCF	ROM	53- 34
59	70612	SFF70612KT#1	NPC	ROM	51- 90
60	70612	SFF70612KT#1	THCF	ROM	51- 90
61	70612	SFF70612KT#2	NPC	ROM	53- 35
62	70612	SFF70612KT#2	THCF	ROM	53- 35
63	70701	SFF70701KM	NPC	ROM	49- 70
64	70701	SFF70701KM	THCF	ROM	49- 70
65	70701	SFF70701KT	NPC	ROM	49- 71
66	70701	SFF70701KT	THCF	ROM	49- 71
67	71708	SFF71708J	THCF	ROM	56- 32
68	71708	SFF71708K	THCF	ROM	56- 33
69	71716	SFF71716J	THCF	ROM	59- 11
70	71716	SFF71716K	THCF	ROM	59- 12
71	74164	SN74164J	AMD	SHIFT REG	81- 86
72	74164	SN74164J	TII	SHIFT REG	81- 86
73	74164	SN74164N	AMD	SHIFT REG	81- 87
74	74164	SN74164N	TII	SHIFT REG	81- 87
75	74164	uPB74164C	NECJ	SHIFT REG	81- 94
76	74164	ZN74164E	FERB	SHIFT REG	81- 90
77	74164	ZN74164J	FERB	SHIFT REG	81- 91
78	74164	74164DC	FSC	SHIFT REG	81- 61
79	74164	74164FC	FSC	SHIFT REG	81- 62
80	74164	74164PC	FSC	SHIFT REG	81- 63
81	74164	74164PC	TUNH	SHIFT REG	81- 63
82	74164	N74164A	MULB	SHIFT REG	81- 77
83	74164	N74164A	PHIN	SHIFT REG	81- 77
84	74164	N74164A	SIC	SHIFT REG	81- 77
85	74164	N74164F	MULB	SHIFT REG	81- 78
86	74164	N74164F	PHIN	SHIFT REG	81- 78
87	74164	N74164F	SIC	SHIFT REG	81- 78
88	74164	N74164F	VALG	SHIFT REG	81- 78
89	74164	N74164N	PHIN	SHIFT REG	81- 79
90	74164	N74164N	SIC	SHIFT REG	81- 79
91	74164	N74164N	VALG	SHIFT REG	81- 79
92	74165	SN74165J	TII	SHIFT REG	80- 62
93	74165	SN74165N	TII	SHIFT REG	80- 63
94	74165	MC74165L	MOTA	SHIFT REG	80- 59
95	74165	ZN74165E	FERB	SHIFT REG	80- 66
96	74165	ZN74165J	FERB	SHIFT REG	80- 67
97	74165	74165DC	FSC	SHIFT REG	77- 76
98	74165	74165FC	FSC	SHIFT REG	77- 77
99	74165	74165PC	FSC	SHIFT REG	77- 78
100	74165	74165PC	TUNH	SHIFT REG	77- 78
101	74165	N74165B	MULB	SHIFT REG	77- 80
102	74165	N74165B	PHIN	SHIFT REG	77- 80
103	74165	N74165B	SIC	SHIFT REG	77- 80
104	74165	N74165F	MULB	SHIFT REG	78- 37
105	74165	N74165F	PHIN	SHIFT REG	78- 37
106	74165	N74165F	SIC	SHIFT REG	78- 37
107	74165	N74165F	VALG	SHIFT REG	78- 37
108	74165	N74165N	PHIN	SHIFT REG	77- 81
109	74165	N74165N	SIC	SHIFT REG	77- 81
110	74165	N74165N	VALG	SHIFT REG	77- 81
111	74166	SN74166J	TII	SHIFT REG	80- 84
112	74166	SN74166N	TII	SHIFT REG	80- 85
113	74166	ZN74166E	FERB	SHIFT REG	80- 87
114	74166	ZN74166J	FERB	SHIFT REG	78- 36
115	74166	74166DC	FSC	SHIFT REG	77- 95
116	74166	74166FC	FSC	SHIFT REG	77- 96
117	74166	74166PC	FSC	SHIFT REG	77- 97
118	74166	74166PC	TUNH	SHIFT REG	77- 97
119	74166	N74166B	MULB	SHIFT REG	78- 3
120	74166	N74166B	PHIN	SHIFT REG	78- 3
121	74166	N74166B	SIC	SHIFT REG	78- 3
122	74166	N74166F	MULB	SHIFT REG	80- 80
123	74166	N74166F	PHIN	SHIFT REG	80- 80
124	74166	N74166F	SIC	SHIFT REG	80- 80
125	74166	N74166F	VALG	SHIFT REG	80- 80
126	74166	N74166N	PHIN	SHIFT REG	80- 81
127	74166	N74166N	SIC	SHIFT REG	80- 81
128	74166	N74166N	VALG	SHIFT REG	80- 81
129	74170	SN74170J	TII	RAM	18- 62
130	74170	SN74170N	TII	RAM	18- 63
131	74170	74170DC	FSC	RAM	18- 47
132	74170	74170FC	FSC	RAM	18- 48
133	74170	74170PC	FSC	RAM	18- 49
134	74170	74170PC	TUNH	RAM	18- 49
135	74170	N74170B	MULB	RAM	18- 27
136	74170	N74170B	PHIN	RAM	18- 27
137	74170	N74170B	SIC	RAM	18- 27
138	74170	N74170F	MULB	RAM	18- 28
139	74170	N74170F	PHIN	RAM	18- 28
140	74170	N74170F	SIC	RAM	18- 28
141	74170	N74170F	VALG	RAM	18- 28
142	74170	N74170N	PHIN	RAM	18- 67
143	74170	N74170N	SIC	RAM	18- 67
144	74170	N74170N	VALG	RAM	18- 67
145	74172	SN74172J	TII	RAM	18-100
146	74172	SN74172N	TII	RAM	18-101
147	74172	N74172F	MULB	RAM	18- 96
148	74172	N74172F	PHIN	RAM	18- 96
149	74172	N74172F	SIC	RAM	18- 96
150	74172	N74172N	MULB	RAM	18- 97
151	74172	N74172N	PHIN	RAM	18- 97
152	74172	N74172N	SIC	RAM	18- 97
153	74174	SN74174J	TII	SHIFT REG	76- 29
154	74174	SN74174N	TII	SHIFT REG	76- 30
155	74174	ZN74174E	FERB	SHIFT REG	76- 33
156	74174	ZN74174J	FERB	SHIFT REG	76- 34
157	74174	N74174F	PHIN	SHIFT REG	76- 20
158	74174	N74174F	SIC	SHIFT REG	76- 20
159	74174	N74174F	VALG	SHIFT REG	76- 20
160	74174	N74174N	PHIN	SHIFT REG	76- 21
161	74174	N74174N	SIC	SHIFT REG	76- 21
162	74174	N74174N	VALG	SHIFT REG	76- 21
163	74175	SN74175J	TII	SHIFT REG	70- 28
164	74175	SN74175N	TII	SHIFT REG	70- 29
165	74175	uPB74175C	NECJ	SHIFT REG	71-109
166	74175	ZN74175E	FERB	SHIFT REG	70- 44
167	74175	ZN74175J	FERB	SHIFT REG	70- 45
168	74175	N74175F	PHIN	SHIFT REG	69- 84
169	74175	N74175F	SIC	SHIFT REG	69- 84
170	74175	N74175F	VALG	SHIFT REG	69- 84
171	74175	N74175N	PHIN	SHIFT REG	69- 85
172	74175	N74175N	SIC	SHIFT REG	69- 85
173	74175	N74175N	VALG	SHIFT REG	69- 85
174	74178	SN74178J	TII	SHIFT REG	70- 30
175	74178	SN74178N	TII	SHIFT REG	70- 31
176	74178	74178DC	FSC	SHIFT REG	69- 59
177	74178	74178FC	FSC	SHIFT REG	69- 60
178	74178	74178PC	FSC	SHIFT REG	69- 61
179	74178	74178PC	TUNH	SHIFT REG	69- 61
180	74178	N74178A	MULB	SHIFT REG	67- 27
181	74178	N74178A	PHIN	SHIFT REG	67- 27
182	74178	N74178A	SIC	SHIFT REG	67- 27
183	74178	N74178F	MULB	SHIFT REG	67- 28
184	74178	N74178F	PHIN	SHIFT REG	67- 28
185	74178	N74178F	SIC	SHIFT REG	67- 28
186	74179	SN74179J	TII	SHIFT REG	70- 32
187	74179	SN74179N	TII	SHIFT REG	70- 33
188	74179	74179DC	FSC	SHIFT REG	69- 62
189	74179	74179FC	FSC	SHIFT REG	69- 63
190	74179	74179PC	FSC	SHIFT REG	69- 64
191	74179	74179PC	TUNH	SHIFT REG	69- 64
192	74179	N74179B	MULB	SHIFT REG	67- 29
193	74179	N74179B	PHIN	SHIFT REG	67- 29
194	74179	N74179B	SIC	SHIFT REG	67- 29
195	74179	N74179F	MULB	SHIFT REG	67- 30
196	74179	N74179F	PHIN	SHIFT REG	67- 30
197	74179	N74179F	SIC	SHIFT REG	67- 30
198	74184	SN74184J	TII	CODE CONV	64- 72
199	74184	SN74184N	TII	CODE CONV	64- 73
200	74185	SN74185AJ	TII	CODE CONV	64- 78
201	74185	SN74185AN	TII	CODE CONV	64- 79
202	74194	SN74194J	AMD	SHIFT REG	70- 34
203	74194	SN74194J	TII	SHIFT REG	70- 34
204	74194	SN74194N	AMD	SHIFT REG	70- 35
205	74194	SN74194N	TII	SHIFT REG	70- 35
206	74194	ZN74194E	FERB	SHIFT REG	70- 46
207	74194	ZN74194J	FERB	SHIFT REG	70- 47
208	74194	74194DC	FSC	SHIFT REG	69- 65
209	74194	74194FC	FSC	SHIFT REG	69- 66
210	74194	74194PC	FSC	SHIFT REG	69- 67
211	74194	74194PC	TUNH	SHIFT REG	69- 67
212	74194	N74194B	MULB	SHIFT REG	69- 86
213	74194	N74194B	PHIN	SHIFT REG	69- 86
214	74194	N74194B	SIC	SHIFT REG	69- 86
215	74194	N74194F	MULB	SHIFT REG	69- 87
216	74194	N74194F	PHIN	SHIFT REG	69- 87
217	74194	N74194F	SIC	SHIFT REG	69- 87
218	74194	N74194F	VALG	SHIFT REG	69- 87
219	74194	N74194N	PHIN	SHIFT REG	69- 88
220	74194	N74194N	SIC	SHIFT REG	69- 88

SYMBOLS AND CODES EXPLAINED IN INTERPRETER

GENERIC PRODUCT INDEX

IN ORDER OF: (1)GENERIC NO. (2)MFR TYPE NO.

LINE No.	1 GENERIC NO.	2 MANUFACTURER TYPE NO.	MFR. CODE	PRODUCT CLASS	PAGE & LINE
1	74194	N74194N	VALG	SHIFT REG	69- 88
2	74195	SN74195J	AMD	SHIFT REG	71- 88
3	74195	SN74195J	TII	SHIFT REG	71- 88
4	74195	SN74195N	AMD	SHIFT REG	71- 89
5	74195	SN74195N	TII	SHIFT REG	71- 89
6	74195	SN74195W	TII	SHIFT REG	71- 90
7	74195	uPB74195C	NECJ	SHIFT REG	72- 1
8	74195	MC74195L	MOTA	SHIFT REG	71- 54
9	74195	74195DC	FSC	SHIFT REG	71- 48
10	74195	74195FC	FSC	SHIFT REG	71- 49
11	74195	74195PC	FSC	SHIFT REG	71- 50
12	74195	74195PC	TUNH	SHIFT REG	71- 50
13	74195	N74195B	MULB	SHIFT REG	71- 62
14	74195	N74195B	PHIN	SHIFT REG	71- 62
15	74195	N74195B	SIC	SHIFT REG	71- 62
16	74195	N74195F	MULB	SHIFT REG	71- 63
17	74195	N74195F	PHIN	SHIFT REG	71- 63
18	74195	N74195F	SIC	SHIFT REG	71- 63
19	74195	N74195F	VALG	SHIFT REG	71- 63
20	74195	N74195N	PHIN	SHIFT REG	71- 64
21	74195	N74195N	SIC	SHIFT REG	71- 64
22	74195	N74195N	VALG	SHIFT REG	71- 64
23	74198	SN74198J	TII	SHIFT REG	78- 32
24	74198	SN74198N	TII	SHIFT REG	78- 33
25	74198	uPB74198C	NECJ	SHIFT REG	79- 26
26	74198	74198DC	FSC	SHIFT REG	77- 98
27	74198	74198FC	FSC	SHIFT REG	77- 99
28	74198	74198PC	FSC	SHIFT REG	77-100
29	74198	74198PC	TUNH	SHIFT REG	77-100
30	74198	N74198F	MULB	SHIFT REG	78- 4
31	74198	N74198F	PHIN	SHIFT REG	78- 4
32	74198	N74198F	SIC	SHIFT REG	78- 4
33	74198	N74198F	VALG	SHIFT REG	78- 4
34	74198	N74198N	MULB	SHIFT REG	78- 5
35	74198	N74198N	PHIN	SHIFT REG	78- 5
36	74198	N74198N	SIC	SHIFT REG	78- 5
37	74198	N74198N	VALG	SHIFT REG	78- 5
38	74199	N74199F	MULB	SHIFT REG	78- 6
39	74199	N74199F	PHIN	SHIFT REG	78- 6
40	74199	N74199F	SIC	SHIFT REG	78- 6
41	74199	N74199F	VALG	SHIFT REG	78- 6
42	74199	N74199N	MULB	SHIFT REG	78- 7
43	74199	N74199N	PHIN	SHIFT REG	78- 7
44	74199	N74199N	SIC	SHIFT REG	78- 7
45	74199	N74199N	VALG	SHIFT REG	78- 7
46	74199	SN74199J	TII	SHIFT REG	78- 34
47	74199	SN74199N	TII	SHIFT REG	78- 35
48	74199	74199DC	FSC	SHIFT REG	77-101
49	74199	74199FC	FSC	SHIFT REG	77-102
50	74199	74199PC	FSC	SHIFT REG	77-103
51	74199	74199PC	TUNH	SHIFT REG	77-103
52	74273	SN74273J	TII	SHIFT REG	78- 77
53	74273	SN74273N	TII	SHIFT REG	78- 78
54	74278	SN74278J	TII	SHIFT REG	65- 67
55	74278	SN74278N	TII	SHIFT REG	65- 68
56	74298	N74298F	PHIN	SHIFT REG	69- 89
57	74298	N74298F	SIC	SHIFT REG	69- 89
58	74298	N74298F	VALG	SHIFT REG	69- 89
59	74298	N74298N	PHIN	SHIFT REG	69- 90
60	74298	N74298N	SIC	SHIFT REG	69- 90
61	74298	N74298N	VALG	SHIFT REG	69- 90
62	74376	SN74376J	TII	SHIFT REG	71- 91
63	74376	SN74376N	TII	SHIFT REG	71- 92
64	75253	UC75253K#1	SOD	ROM	47- 39
65	75253	UC75253K#2	SOD	ROM	49- 78
66	75253	UC75253K#3	SOD	ROM	47- 96
67	75253	UC75253K#4	SOD	ROM	52-110
68	75254	UC75254K#1	SOD	ROM	47- 40
69	75254	UC75254K#2	SOD	ROM	49- 79
70	75254	UC75254K#3	SOD	ROM	47- 97
71	75254	UC75254K#4	SOD	ROM	53- 1
72	75723	UC75723K	SOD	ROM	49- 69
73	76160	HM1-76160-2	HAS	ROM	58- 77
74	76160	HM1-76160-5	HAS	ROM	58- 61
75	76160	HM9-76160-2	HAS	ROM	58- 78
76	80101	SFC80101AK	NPC	RAM	20- 34
77	80101	SFC80101AK	THCF	RAM	20- 34
78	80101	SFC80101K	NPC	RAM	20- 75
79	80101	SFC80101K	THCF	RAM	20- 75
80	80106	SFC80106AK	NPC	RAM	22- 67
81	80106	SFC80106AK	THCF	RAM	22- 67
82	80107	SFC80107K	NPC	RAM	22- 68
83	80107	SFC80107K	THCF	RAM	22- 68
84	81002	SN81002	TII	RAM	21- 29
85	82100	MC82100LC	MOTA	SPECIAL	87- 88
86	82100	MC82100LM	MOTA	SPECIAL	87- 89
87	82101	MC82101LC	MOTA	SPECIAL	87- 90
88	82101	MC82101LM	MOTA	SPECIAL	87- 91
89	82114	SFF82114E-20	THCF	RAM	34- 42
90	82114	SFF82114E-25	THCF	RAM	34- 80
91	82114	SFF82114E-30	THCF	RAM	35- 36
92	82114	SFF82114E-45	THCF	RAM	36- 3
93	82114	SFF82114J-20	THCF	RAM	34- 43
94	82114	SFF82114J-25	THCF	RAM	34- 81
95	82114	SFF82114J-30	THCF	RAM	35- 37
96	82114	SFF82114J-45	THCF	RAM	36- 4
97	82707	MCM82707L	MOTA	ROM	55- 77
98	82707	MCM82707P	MOTA	ROM	55- 78
99	82708	MCM82708L	MOTA	ROM	55- 79
100	82708	MCM82708P	MOTA	ROM	55- 80
101	93403	93403DC	AMD	RAM	20- 93
102	93403	93403DC	FSC	RAM	20- 93
103	93403	93403DM	AMD	RAM	20- 61
104	93403	93403FM	AMD	RAM	20- 62
105	93403	93403PC	AMD	RAM	20- 63
106	93407	93407ADC	FSC	RAM	19- 9
107	93407	93407AFC	FSC	RAM	19- 10
108	93407	93407BDC	FSC	RAM	19- 11
109	93407	93407BDM	FSC	RAM	19- 13
110	93407	93407BFC	FSC	RAM	19- 12
111	93407	93407BFM	FSC	RAM	19- 14
112	93410	93410ADC	FSC	RAM	23- 40
113	93410	93410AFC	FSC	RAM	23- 41
114	93410	93410APC	FSC	RAM	23- 42
115	93410	93410DC	FSC	RAM	23- 56
116	93410	93410DM	FSC	RAM	23- 64
117	93410	93410FC	FSC	RAM	23- 57
118	93410	93410FM	FSC	RAM	23- 65
119	93410	93410PC	FSC	RAM	23- 58
120	93411	93411ADC	FSC	RAM	23- 43
121	93411	93411DC	FSC	RAM	23- 52
122	93411	93411DM	FSC	RAM	23- 61
123	93411	93411FM	FSC	RAM	23- 62
124	93411	93411PC	FSC	RAM	23- 53
125	93412	93412DC	FSC	RAM	24- 55
126	93412	93412DM	FSC	RAM	24- 63
127	93412	93412FC	FSC	RAM	24- 56
128	93412	93412FM	FSC	RAM	24- 64
129	93412	MCM93412DC	MOTA	RAM	24- 15
130	93412	MCM93412DM	MOTA	RAM	24- 16
131	93412	MCM93412FM	MOTA	RAM	24- 17
132	93412	MCM93412PC	MOTA	RAM	24- 18
133	93415	N93415AF	MULB	RAM	28- 34
134	93415	N93415AF	PHIN	RAM	28- 34
135	93415	93415ADC	FSC	RAM	28- 80
136	93415	93415AFC	FSC	RAM	28- 81
137	93415	93415AI	MULB	RAM	28- 88
138	93415	93415AI	PHIN	RAM	28- 88
139	93415	93415APC	FSC	RAM	28- 82
140	93415	93415DC	FSC	RAM	28- 89
141	93415	93415DM	FSC	RAM	29- 2
142	93415	93415FC	FSC	RAM	28- 90
143	93415	93415FM	FSC	RAM	29- 3
144	93415	93415PC	FSC	RAM	28- 91
145	93415	MCM93415DC	MOTA	RAM	28- 97
146	93415	MCM93415DM	MOTA	RAM	29- 4
147	93415	MCM93415FM	MOTA	RAM	29- 5
148	93415	MCM93415PC	MOTA	RAM	28- 98
149	93417	93417DC	FSC	ROM	48- 3
150	93417	93417DM	FSC	ROM	48- 19
151	93417	93417FC	FSC	ROM	48- 4
152	93417	93417FM	FSC	ROM	48- 20
153	93417	93417PC	FSC	ROM	48- 5
154	93419	MBM93419	FMI	RAM	21- 68
155	93419	93419DC	FSC	RAM	21- 67
156	93419	93419DM	FSC	RAM	21- 69
157	93421	93421ADC	FSC	RAM	23- 38
158	93421	93421DC	FSC	RAM	23- 45
159	93421	93421DM	FSC	RAM	23- 59
160	93421	93421FM	FSC	RAM	23- 60
161	93421	93421PC	FSC	RAM	23- 46
162	93422	93422DC	FSC	RAM	24- 57
163	93422	93422DM	FSC	RAM	24- 65
164	93422	93422FC	FSC	RAM	24- 58
165	93422	93422FM	FSC	RAM	24- 66
166	93422	MCM93422DC	MOTA	RAM	24- 19
167	93422	MCM93422PC	MOTA	RAM	24- 20
168	93425	N93425AF	MULB	RAM	28- 35
169	93425	N93425AF	PHIN	RAM	28- 35
170	93425	93425ADC	FSC	RAM	28- 92
171	93425	93425AI	MULB	RAM	28- 93
172	93425	93425AI	PHIN	RAM	28- 93
173	93425	93425APC	FSC	RAM	28- 94
174	93425	93425DC	FSC	RAM	29- 12
175	93425	93425DM	FSC	RAM	29- 17
176	93425	93425FM	FSC	RAM	29- 18
177	93425	93425PC	FSC	RAM	29- 13
178	93425	MCM93425DC	MOTA	RAM	28- 99
179	93425	MCM93425DM	MOTA	RAM	29- 6
180	93425	MCM93425FM	MOTA	RAM	29- 7
181	93425	MCM93425PC	MOTA	RAM	28-100
182	93427	93427DC	FSC	ROM	48- 6
183	93427	93427DM	FSC	ROM	48- 21
184	93427	93427FC	FSC	ROM	48- 7
185	93427	93427FM	FSC	ROM	48- 22
186	93427	93427PC	FSC	ROM	48- 8
187	93431	93431DC	FSC	ROM	49- 89
188	93431	93431DM	FSC	ROM	49- 97
189	93431	93431FC	FSC	ROM	49- 90
190	93431	93431FM	FSC	ROM	49- 98
191	93431	93431PC	FSC	ROM	49- 91
192	93432	93432DC	FSC	ROM	51- 43
193	93432	93432DM	FSC	ROM	51- 52
194	93432	93432FC	FSC	ROM	51- 44
195	93432	93432FM	FSC	ROM	51- 53
196	93432	93432PC	FSC	ROM	51- 45
197	93436	93436DC	FSC	ROM	50- 17
198	93436	93436DM	FSC	ROM	50- 36
199	93436	93436FC	FSC	ROM	50- 18
200	93436	93436FM	FSC	ROM	50- 37
201	93436	93436PC	FSC	ROM	50- 19
202	93438	93438DC	FSC	ROM	52- 5
203	93438	93438DM	FSC	ROM	52- 33
204	93438	93438FC	FSC	ROM	52- 6
205	93438	93438FM	FSC	ROM	52- 34
206	93438	93438PC	FSC	ROM	52- 7
207	93441	93441DC	FSC	ROM	49- 92
208	93441	93441DM	FSC	ROM	49- 99
209	93441	93441FC	FSC	ROM	49- 93
210	93441	93441FM	FSC	ROM	49-100
211	93441	93441PC	FSC	ROM	49- 94
212	93442	93442DC	FSC	ROM	51- 46
213	93442	93442DM	FSC	ROM	51- 54
214	93442	93442FC	FSC	ROM	51- 47
215	93442	93442FM	FSC	ROM	51- 55
216	93442	93442PC	FSC	ROM	51- 48
217	93446	93446DC	FSC	ROM	50- 20
218	93446	93446DM	FSC	ROM	50- 38
219	93446	93446FC	FSC	ROM	50- 21
220	93446	93446FM	FSC	ROM	50- 39

SYMBOLS AND CODES EXPLAINED IN INTERPRETER

GENERIC PRODUCT INDEX

IN ORDER OF: (1)GENERIC NO. (2)MFR TYPE NO.

LINE No.	1 GENERIC NO.	2 MANUFACTURER TYPE NO.	MFR. CODE	PRODUCT CLASS	PAGE & LINE
1	93446	93446PC	FSC	ROM	50- 22
2	93448	93448DC	FSC	ROM	52- 8
3	93448	93448DM	FSC	ROM	52- 35
4	93448	93448FC	FSC	ROM	52- 9
5	93448	93448FM	FSC	ROM	52- 36
6	93448	93448PC	FSC	ROM	52- 10
7	93450	93450DC	FSC	ROM	55- 1
8	93450	93450DM	FSC	ROM	55- 2
9	93450	93450FC	FSC	ROM	55- 3
10	93450	93450PC	FSC	ROM	55- 4
11	93451	93451DC	FSC	ROM	55- 5
12	93451	93451DM	FSC	ROM	55- 6
13	93451	93451FC	FSC	ROM	55- 7
14	93451	93451PC	FSC	ROM	55- 8
15	93452	93452DC	FSC	ROM	53- 43
16	93452	93452DM	FSC	ROM	53- 61
17	93452	93452PC	FSC	ROM	53- 44
18	93453	93453DC	FSC	ROM	53- 45
19	93453	93453DM	FSC	ROM	53- 62
20	93453	93453PC	FSC	ROM	53- 46
21	93454	93454DC	FSC	ROM	54- 31
22	93454	93454DM	FSC	ROM	54- 37
23	93454	93454FC	FSC	ROM	54- 32
24	93454	93454FM	FSC	ROM	54- 38
25	93454	93454PC	FSC	ROM	54- 33
26	93457	93457DC	FSC	ROM	47- 62
27	93457	93457DM	FSC	ROM	47- 72
28	93457	93457FC	FSC	ROM	47- 63
29	93457	93457FM	FSC	ROM	47- 73
30	93457	93457PC	FSC	ROM	47- 64
31	93458	93458DC	FSC	SPECIAL	87- 80
32	93458	93458DM	FSC	SPECIAL	87- 81
33	93459	93459DC	FSC	SPECIAL	87- 82
34	93459	93459DM	FSC	SPECIAL	87- 83
35	93464	93464DC	FSC	ROM	54- 34
36	93464	93464DM	FSC	ROM	54- 39
37	93464	93464FC	FSC	ROM	54- 35
38	93464	93464FM	FSC	ROM	54- 40
39	93464	93464PC	FSC	ROM	54- 36
40	93467	93467DC	FSC	ROM	47- 65
41	93467	93467DM	FSC	ROM	47- 74
42	93467	93467FC	FSC	ROM	47- 66
43	93467	93467FM	FSC	ROM	47- 75
44	93467	93467PC	FSC	ROM	47- 67
45	93470	93470DC	FSC	RAM	39-106
46	93470	93470DM	FSC	RAM	40- 1
47	93470	93470PC	FSC	RAM	40- 2
48	93471	93471DC	FSC	RAM	40- 3
49	93471	93471DM	FSC	RAM	40- 4
50	93471	93471PC	FSC	RAM	40- 5
51	93481	93481ADC	FSC	RAM	38- 42
52	93481	93481AFC	FSC	RAM	38- 43
53	93481	93481APC	FSC	RAM	38- 44
54	93481	93481DC	FSC	RAM	38- 45
55	93481	93481FC	FSC	RAM	38- 46
56	93481	93481PC	FSC	RAM	38- 47
57	95000	F95000DC	FSC	SHIFT REG	73- 24
58	95000	95000DC	FSC	SHIFT REG	73- 13
59	95400	95400DC	FSC	RAM	19- 58
60	95401	95401DC	FSC	RAM	18- 2
61	96364	SFF96364AE	THCF	SPECIAL	88- 39
62	96364	SFF96364AK	THCF	SPECIAL	88- 40
63	96364	SFF96364BE	THCF	SPECIAL	88- 41
64	96364	SFF96364BK	THCF	SPECIAL	88- 42
65	100141	F100141DC	FSC	SHIFT REG	79- 44
66	100141	F100141FC	FSC	SHIFT REG	79- 45
67	100141	HD100141	HITJ	SHIFT REG	80-100
68	100141	HD100141F	HITJ	SHIFT REG	80-101
69	100142	F100142DC	FSC	SPECIAL	87- 2
70	100142	F100142FC	FSC	SPECIAL	87- 3
71	100145	F100145DC	FSC	RAM	19- 49
72	100145	F100145FC	FSC	RAM	19- 50
73	100145	HD100145	HITJ	SHIFT REG	83- 79
74	100145	HD100145F	HITJ	SHIFT REG	83- 80
75	100151	F100151DC	FSC	SHIFT REG	76- 87
76	100151	F100151FC	FSC	SHIFT REG	76- 88
77	100414	F100414DC	FSC	RAM	22- 45
78	100414	F100414FC	FSC	RAM	22- 46
79	100415	HXA100415AD	PHIN	RAM	28- 11
80	100415	HXA100415D	PHIN	RAM	28- 19
81	100415	F100415DC	FSC	RAM	28- 16
82	100415	F100415FC	FSC	RAM	28- 17
83	100415	GXB100415	RTCF	RAM	28- 10
84	100416	F100416DC	FSC	ROM	47-103
85	100416	F100416FC	FSC	ROM	47-104
86	100422	HM100422	HITJ	RAM	24- 31
87	100422	HM100422F	HITJ	RAM	24- 23
88	100422	HXA100422AD	PHIN	RAM	24- 38
89	100422	HXA100422D	PHIN	RAM	24- 42
90	100422	F100422DC	FSC	RAM	24- 26
91	100422	F100422FC	FSC	RAM	24- 27
92	100422	GXB100422AF	RTCF	RAM	24- 28
93	100422	GXB100422AN	RTCF	RAM	24- 29
94	100422	GXB100422F	RTCF	RAM	24- 36
95	100422	GXB100422N	RTCF	RAM	24- 37
96	100470	F100470DC	FSC	RAM	39- 93
97	100470	F100470FC	FSC	RAM	39- 94
98	100473	GXB100473	SIEG	RAM	21- 46
99	145101	MCM145101-1L	MOTA	RAM	25- 36
100	145101	MCM145101-1P	MOTA	RAM	25- 37
101	145101	MCM145101-3L	MOTA	RAM	25- 45
102	145101	MCM145101-3P	MOTA	RAM	25- 46
103	145101	MCM145101-8L	MOTA	RAM	25- 54
104	145101	MCM145101-8P	MOTA	RAM	25- 55
105	145101	MCM145101L	MOTA	RAM	25- 47
106	145101	MCM145101P	MOTA	RAM	25- 48
107	146504	MCM146504	MOTA	RAM	40- 38
108	146508	MCM146508-1L	MOTA	RAM	29- 89
109	146508	MCM146508-1P	MOTA	RAM	29- 90
110	146508	MCM146508-2L	MOTA	RAM	29- 91
111	146508	MCM146508L	MOTA	RAM	30- 12
112	146508	MCM146508P	MOTA	RAM	30- 13
113	146514	MCM146514L	MOTA	RAM	33- 50
114	146514	MCM146514P	MOTA	RAM	33- 51
115	146518	MCM146518-1L	MOTA	RAM	29- 92
116	146518	MCM146518-1P	MOTA	RAM	29- 93
117	146518	MCM146518-2L	MOTA	RAM	29- 94
118	146518	MCM146518L	MOTA	RAM	30- 14
119	146518	MCM146518P	MOTA	RAM	30- 15
120	270059	AM270059E	AMD	RAM	23- 66
121	270059	AM270059F	AMD	RAM	23- 67
122	270159	AM270159E	AMD	RAM	23- 68
123	270159	AM270159F	AMD	RAM	23- 69
124	340174	340174DC	FSC	SHIFT REG	76- 3
125	340174	340174DM	FSC	SHIFT REG	76- 4
126	340174	340174FC	FSC	SHIFT REG	76- 5
127	340174	340174FM	FSC	SHIFT REG	76- 6
128	340174	340174PC	FSC	SHIFT REG	76- 7
129	340175	340175DC	FSC	SHIFT REG	73- 47
130	340175	340175DM	FSC	SHIFT REG	73- 48
131	340175	340175FC	FSC	SHIFT REG	73- 49
132	340175	340175FM	FSC	SHIFT REG	73- 50
133	340175	340175PC	FSC	SHIFT REG	73- 51
134	340194	340194DC	FSC	SHIFT REG	65- 70
135	340194	340194DM	FSC	SHIFT REG	65- 71
136	340194	340194FC	FSC	SHIFT REG	65- 72
137	340194	340194FM	FSC	SHIFT REG	65- 73
138	340194	340194PC	FSC	SHIFT REG	65- 74
139	340195	340195DC	FSC	SHIFT REG	65- 75
140	340195	340195DM	FSC	SHIFT REG	65- 76
141	340195	340195FC	FSC	SHIFT REG	65- 77
142	340195	340195FM	FSC	SHIFT REG	65- 78
143	340195	340195PC	FSC	SHIFT REG	65- 79
144	462316	HN462316EP	HITJ	ROM	59- 30
145	462532	HN462532	HITJ	ROM	60- 10
146	462716	HN462716	HITJ	ROM	59- 19
147	462716	HN462716G	HITJ	ROM	59- 20
148	462732	HN462732	HITJ	ROM	60- 17
149	472114	HM472114-3	HITJ	RAM	34-109
150	472114	HM472114-4	HITJ	RAM	35- 79
151	472114	HM472114A-1	HITJ	RAM	33- 96
152	472114	HM472114A-2	HITJ	RAM	37- 4
153	472114	HM472114AP-1	HITJ	RAM	33- 97
154	472114	HM472114AP-2	HITJ	RAM	37- 5
155	472114	HM472114P-3	HITJ	RAM	34-110
156	472114	HM472114P-4	HITJ	RAM	35- 80

SYMBOLS AND CODES EXPLAINED IN INTERPRETER

1. TYPE No. CROSS INDEX

IN TYPE NUMBER SEQUENCE

TYPE No.	MFRS	Pg&Line
9LS95DC	FSC	72- 2
9LS95DM	FSC	72- 3
9LS95FC	FSC	72- 4
9LS95FM	FSC	72- 5
9LS95PC	FSC	72- 6
9LS164DC	FSC	78- 80
9LS164DM	FSC	78- 81
9LS164FC	FSC	78- 82
9LS164FM	FSC	78- 83
9LS164PC	FSC	78- 84
9LS170DC	FSC	18- 35
9LS170DM	FSC	18- 36
9LS170FC	FSC	18- 37
9LS170FM	FSC	18- 38
9LS170PC	FSC	18- 39
9LS174DC	FSC	76- 74
9LS174DM	FSC	76- 75
9LS174FC	FSC	76- 76
9LS174FM	FSC	76- 77
9LS174PC	FSC	76- 78
9LS175DC	FSC	72- 57
9LS175DM	FSC	72- 58
9LS175FC	FSC	72- 59
9LS175FM	FSC	72- 60
9LS175PC	FSC	72- 61
9LS194DC	FSC	72- 7
9LS194DM	FSC	72- 8
9LS194FC	FSC	72- 9
9LS194FM	FSC	72- 10
9LS194PC	FSC	72- 11
9LS195DC	FSC	72- 12
9LS195DM	FSC	72- 13
9LS195FC	FSC	72- 14
9LS195FM	FSC	72- 15
9LS195PC	FSC	72- 16
9LS295DC	FSC	72- 35
9LS295DM	FSC	72- 36
9LS295FC	FSC	72- 37
9LS295FM	FSC	72- 38
9LS295PC	FSC	72- 39
9LS670DC	FSC	18- 40
9LS670DM	FSC	18- 41
9LS670FC	FSC	18- 42
9LS670FM	FSC	18- 43
9LS670PC	FSC	18- 44
21F02-2F	PHIN	31- 9
SIC	VALG	
21F02-2I	PHIN	31- 10
SIC	VALG	
21F02-2N	PHIN	31- 11
SIC	VALG	
21F02-4F	PHIN	31- 99
SIC	VALG	
21F02-4I	PHIN	31-100
SIC	VALG	
21F02-4N	PHIN	31-101
SIC	VALG	
21F02B	MULB	31- 52
	SIC	
21F02F	MULB	31- 53
PHIN	SIC	
	VALG	
21F02I	PHIN	31- 54
SIC	VALG	
21F02N	PHIN	31- 55
SIC	VALG	
21L02-1B	MULB	32- 26
	SIC	
21L02-1F	MULB	32- 27
PHIN	SIC	
	VALG	
21L02-1I	PHIN	32- 28
SIC	VALG	
21L02-1N	PHIN	32- 79
SIC	VALG	
21L02-2F	PHIN	32- 39
SIC	VALG	
21L02-2I	PHIN	32- 40
SIC	VALG	
21L02-2N	PHIN	32- 41
SIC	VALG	
21L02-3B	MULB	31- 87
	SIC	
21L02-3F	MULB	31- 88
PHIN	SIC	
	VALG	
21L02-3I	MULB	31- 89
PHIN	SIC	
	VALG	
21L02-3N	PHIN	31- 90
SIC	VALG	
21L02F	SIC	32- 80
	VALG	
21L02FDC	FSC	31- 56
21L02FFC	FSC	31- 57
21L02FPC	FSC	31- 58
21L02HDC	FSC	31- 12
21L02HFC	FSC	31- 13
21L02HPC	FSC	31- 14
21L02I	SIC	32- 81
	VALG	
21L02N	SIC	32- 82
	VALG	
21L021DC	FSC	31-102
21L021FC	FSC	31-103
21L021PC	FSC	31-104
21L022DC	FSC	32- 42
21L022FC	FSC	32- 43
21L022PC	FSC	32- 44
25L01B	PHIN	24- 14
	SIC	
25L01I	PHIN	24- 2
SIC	VALG	

TYPE No.	MFRS	Pg&Line
25L01N	SIC	24- 3
	VALG	
53S483N	MMI	51- 98
54F189DM	FSC	19- 98
54F189FM	FSC	19- 99
54F289DM	FSC	19-100
54F289FM	FSC	19-101
54LS89DM	FSC	19- 65
54LS89FM	FSC	19- 66
54LS91J	RTN	82- 25
54LS91W	RTN	82- 26
54LS95BDM	FSC	70- 53
54LS95BFM	FSC	70- 54
54LS95BJ	RTN	68- 26
54LS95BW	RTN	68- 27
54LS164DM	FSC	81- 52
54LS164FM	FSC	81- 53
54LS164J	RTN	81- 54
54LS164W	RTN	81- 55
54LS165DM	FSC	80- 90
54LS165FM	FSC	80- 91
54LS170DM	FSC	18- 3
54LS170FM	FSC	18- 4
54LS174J	RTN	76- 64
54LS174W	RTN	76- 65
54LS175J	RTN	71- 96
54LS175W	RTN	71- 97
54LS189DM	FSC	20- 35
54LS189FM	FSC	20- 36
54LS194ADM	FSC	70- 55
54LS194AFM	FSC	70- 56
54LS194AJ	RTN	70- 57
54LS194AW	RTN	70- 58
54LS195ADM	FSC	70- 59
54LS195AFM	FSC	70- 60
54LS195AJ	RTN	70- 61
54LS195AW	RTN	70- 62
54LS289DM	FSC	20- 37
54LS289FM	FSC	20- 38
54LS295ADM	FSC	70- 63
54LS295AFM	FSC	70- 64
54LS295AJ	RTN	70- 65
54LS295AW	RTN	70- 66
54LS299DM	FSC	78- 85
54LS299FM	FSC	78- 86
54LS322DM	FSC	78- 87
54LS322FM	FSC	78- 88
54LS323DM	FSC	78- 89
54LS323FM	FSC	78- 90
54LS378DM	FSC	76- 36
54LS378FM	FSC	76- 37
54LS379DM	FSC	70- 67
54LS379FM	FSC	70- 68
54LS395AJ	RTN	69- 11
54LS395AW	RTN	69- 12
54LS395DM	FSC	70- 69
54LS395FM	FSC	70- 70
54LS670DM	FSC	18- 5
54LS670FM	FSC	18- 6
54LS670J	RTN	18- 7
54LS670W	RTN	18- 8
54S189FM	FSC	20- 47
54S194DM	FSC	72- 70
54S194FM	FSC	72- 71
54S289DM	FSC	20- 48
54S289FM	FSC	20- 49
74F189DC	FSC	19-102
74F189FC	FSC	19-103
74F189PC	FSC	19-104
74F289DC	FSC	19-105
74F289FC	FSC	19-106
74F289PC	FSC	19-107
74LS89DC	FSC	19- 67
74LS89FC	FSC	19- 68
74LS89PC	FSC	19- 69
74LS91J	RTN	82- 27
74LS91W	RTN	82- 28
74LS95BDC	FSC	70- 71
74LS95BFC	FSC	70- 72
74LS95BJ	RTN	68- 28
74LS95BPC	FSC	70- 73
74LS95BW	RTN	68- 29
74LS164DC	FSC	81- 56
74LS164FC	FSC	81- 57
74LS164PC	FSC	81- 58
74LS165DC	FSC	80- 92
74LS165FC	FSC	80- 93
74LS165PC	FSC	80- 94
74LS170DC	FSC	18- 9
74LS170FC	FSC	18- 10
74LS170PC	FSC	18- 11
74LS189DC	FSC	20- 39
74LS189FC	FSC	20- 40
74LS189PC	FSC	20- 41
74LS194ADC	FSC	70- 74
74LS194AFC	FSC	70- 75
74LS194AJ	RTN	70- 76
74LS194APC	FSC	70- 77
74LS194AW	RTN	70- 78
74LS195ADC	FSC	70- 79
74LS195AFC	FSC	70- 80
74LS195AJ	RTN	70- 81
74LS195APC	FSC	70- 82
74LS195AW	RTN	70- 83
74LS273PC	FSC	78- 38
74LS289DC	FSC	20- 42
74LS289FC	FSC	20- 43
74LS289PC	FSC	20- 44
74LS295ADC	FSC	70- 84
74LS295AFC	FSC	70- 85
74LS295AJ	RTN	70- 86
74LS295APC	FSC	70- 87
74LS295AW	RTN	70- 88
74LS299DC	FSC	79- 27

TYPE No.	MFRS	Pg&Line
74LS299FC	FSC	79- 28
74LS299PC	FSC	78- 91
74LS322DC	FSC	78- 92
74LS322FC	FSC	78- 93
74LS322PC	FSC	78- 94
74LS323DC	FSC	78- 95
74LS323FC	FSC	77- 88
74LS323PC	FSC	78- 96
74LS374PC	FSC	78- 97
74LS377PC	FSC	78- 39
74LS378DC	FSC	76- 38
74LS378FC	FSC	76- 39
74LS378PC	FSC	76- 40
74LS379DC	FSC	70- 89
74LS379FC	FSC	70- 90
74LS379PC	FSC	70- 91
74LS395DC	FSC	70- 92
74LS395FC	FSC	70- 93
74LS395PC	FSC	70- 94
74LS574PC	FSC	78- 98
74LS670DC	FSC	18- 12
74LS670FC	FSC	18- 13
74LS670PC	FSC	18- 14
74S189DC	FSC	20- 20
74S189FC	FSC	20- 21
74S189PC	FSC	20- 22
74S194DC	FSC	72- 72
74S194FC	FSC	72- 73
74S194PC	FSC	72- 74
74S289DC	FSC	20- 23
74S289FC	FSC	20- 24
74S289PC	FSC	20- 25
93H00DC	FSC	72- 41
93H00DM	FSC	72- 42
93H00FC	FSC	72- 43
93H00FM	FSC	72- 44
93H00PC	FSC	72- 45
93H72DC	FSC	72- 46
93H72DM	FSC	72- 47
93H72FC	FSC	72- 48
93H72FM	FSC	72- 49
93H72PC	FSC	72- 50
93L00DC	FSC	66- 69
93L00DM	FSC	66- 70
93L00FC	FSC	66- 71
93L00FM	FSC	66- 72
93L00PC	FSC	66- 73
93L28DC	FSC	82- 74
93L28DM	FSC	82- 75
93L28FC	FSC	82- 76
93L28FM	FSC	82- 77
93L28PC	FSC	82- 78
93L38DC	FSC	76-102
93L38DM	FSC	77- 1
93L38FC	FSC	77- 2
93L38FM	FSC	77- 3
93L38PC	FSC	77- 4
93L412DC	FSC	24- 59
93L412DM	FSC	24- 67
93L412FC	FSC	24- 60
93L412FM	FSC	24- 68
93L415DC	FSC	28-106
93L415DM	FSC	29- 8
93L415FC	FSC	28-107
93L415FM	FSC	29- 9
93L415PC	FSC	28-108
93L420DC	FSC	23- 39
93L420DM	FSC	23- 50
93L420FM	FSC	23- 51
93L421DC	FSC	23- 70
93L421DM	FSC	23- 72
93L421FM	FSC	23- 73
93L421PC	FSC	23- 71
93L422DC	FSC	24- 61
93L422DM	FSC	24- 69
93L422FC	FSC	24- 62
93L422FM	FSC	24- 70
93L425DC	FSC	28-109
93L425DM	FSC	29- 10
93L425FC	FSC	28-110
93L425FM	FSC	29- 11
93L425PC	FSC	29- 1
93S00DC	FSC	72- 75
93S00DM	FSC	72- 76
93S00FC	FSC	72- 77
93S00FM	FSC	72- 78
93S00PC	FSC	72- 79
95H00DC	FSC	73- 18
370AJ	TSC	65- 29
370AL	TSC	65- 30
370BL	TSC	65- 31
370CJ	TSC	65- 32
370CL	TSC	65- 33
370ML	TSC	65- 34
375AJ	TSC	65-104
375AL	TSC	65-105
375BL	TSC	65-106
375CJ	TSC	65-107
375CL	TSC	65-108
375ML	TSC	65-109
1101ADM	AMD	24- 9
1103-1IK	PHIN	27-110
	SIC	
1103-1XA	PHIN	28- 1
	SIC	
1103I	SIC	28- 6
	VALG	
1103IK	PHIN	28- 2
	SIC	
1103N	SIC	28- 7
	VALG	
1103XA	PHIN	28- 3
	SIC	
1402A	AMD	85- 63

TYPE No.	MFRS	Pg&Line
1402AB	PHIN	85- 57
	SIC	
1402AI	PHIN	85- 58
	SIC	
1403A	AMD	85- 98
1403ATA	PHIN	85- 92
	SIC	
1403AV	PHIN	85- 93
	SIC	
1404A	AMD	86- 8
1404ATA	PHIN	85-109
	SIC	
1404AV	PHIN	85-110
	SIC	
1405A	AMD	85- 83
1405K	PHIN	85- 79
	SIC	
1406T	AMD	85- 2
1407T	AMD	85- 3
1506T	AMD	85- 4
1507T	AMD	85- 5
1702AI	PHIN	49- 60
SIC	VALG	
2101A-2F	PHIN	25- 99
2101A-2N	PHIN	25-100
2101A-4F	PHIN	26- 32
2101A-4N	PHIN	26- 33
2101AF	PHIN	26- 10
2101AN	PHIN	26- 11
2101N	PHIN	26- 69
SIC	VALG	
2102-1DC	FSC	31-105
2102-1DL	FSC	31-106
2102-1DM	FSC	31-107
2102-1FC	FSC	31-108
2102-1FL	FSC	31-109
2102-1FM	FSC	31-110
2102-1PC	FSC	32- 1
2102-2DC	FSC	32- 45
2102-2DL	FSC	32- 46
PHIN	SIC	
2102-2DM	FSC	32- 47
2102-2FC	FSC	32- 48
2102-2FL	FSC	32- 49
2102-2FM	FSC	32- 50
2102-2PC	FSC	32- 51
2102DC	SGAI	32- 86
2102FDC	FSC	31- 59
2102FDL	FSC	31- 60
2102FDM	FSC	31- 61
	SGAI	
2102FFC	FSC	31- 62
2102FFL	FSC	31- 63
2102FFM	FSC	31- 64
2102FPC	FSC	31- 65
2102HDC	FSC	31- 15
2102HDL	FSC	31- 16
2102HDM	FSC	31- 17
2102HFC	FSC	31- 18
2102HFL	FSC	31- 19
2102HFM	FSC	31- 20
2102HPC	FSC	31- 21
2102L1DC	FSC	32- 2
2102L1DL	FSC	32- 3
2102L1DM	FSC	32- 4
2102L1FC	FSC	32- 5
2102L1FL	FSC	32- 6
2102L1FM	FSC	32- 7
2102L1PC	FSC	32- 8
2102L2DC	FSC	32- 52
2102L2DL	FSC	32- 53
2102L2DM	FSC	32- 54
2102L2FC	FSC	32- 55
2102L2FL	FSC	32- 56
2102L2FM	FSC	32- 57
2102L2PC	FSC	32- 58
2102LFDC	FSC	31- 66
2102LFDL	FSC	31- 67
2102LFDM	FSC	31- 68
2102LFFC	FSC	31- 69
2102LFFL	FSC	31- 70
2102LFFM	FSC	31- 71
2102LFPC	FSC	31- 72
2102LHDC	FSC	31- 22
2102LHDL	FSC	31- 23
2102LHDM	FSC	31- 24
2102LHFC	FSC	31- 25
2102LHFL	FSC	31- 26
2102LHFM	FSC	31- 27
2102LHPC	FSC	31- 28
2109-3	ITL	43- 28
2109-4	ITL	43- 30
2111-1I	PHIN	26- 55
	VALG	
2111-1N	SIC	26- 56
2111A-2F	PHIN	25-101
2111A-2N	PHIN	25-102
2111A-4F	PHIN	26- 34
2111A-4N	PHIN	26- 35
2111AF	PHIN	26- 12
2111AN	PHIN	26- 13
2112A-2F	PHIN	25-103
2112A-2N	PHIN	25-104
2112A-4F	PHIN	26- 36
2112A-4N	PHIN	26- 37
2112AF	PHIN	26- 14
2112AN	PHIN	26- 15
2114-2CA	EMM	33-107
2114-2CB	EMM	33-108
2114-2CE	EMM	33-109
2114-3CA	EMM	34- 92
2114-3CB	EMM	34- 93
2114-3CE	EMM	34- 94
2114-UCA	EMM	36- 78

TYPE No.	MFRS	Pg&Line
2114A-4	ITL	36-106
2114A-5	ITL	37- 6
2114AL-1	ITL	36-103
2114AL-2	ITL	36-104
2114AL-3	ITL	36-105
2114AL-4	ITL	36-107
2114UCB	EMM	36- 79
2114UCE	EMM	36- 80
2114UMA	EMM	36- 81
2117-2	ITL	44- 81
2117-3	ITL	44- 90
2117-4	ITL	44-100
2141-2	EMM	43- 4
	ITL	
2141-3	EMM	43- 6
	ITL	
2141-4	EMM	43- 10
	ITL	
2141-5	EMM	43- 14
	ITL	
2141-UCB	EMM	40- 89
2141-UCE	EMM	40- 90
2141L-3	ITL	43- 7
2141L-4	ITL	43- 11
2141L-5	ITL	43- 15
2142	ITL	35- 66
2142-2	ITL	33-110
2142-3	ITL	34- 95
2142L3	ITL	34- 96
2142L	ITL	35- 67
2147	INL	42-108
	ITL	
2147-3	INL	40- 17
2147-6	ITL	43- 2
2147H-3	ITL	42-105
2147H-4	ITL	42-106
2147L	ITL	42-109
2503V	PHIN	85-102
2505K	AMD	85- 80
PHIN	SIC	
	VALG	
2513IXCM2140	PHIN	62- 50
2513IXCMXXXX#1		63- 20
	PHIN	
2513IXCMXXXX#2		63- 21
	PHIN	
2514NXCMXXXX	PHIN	51- 6
2516N	VALG	62- 33
2524N	VALG	85- 82
2529N	SIC	85- 54
	VALG	
2529V	PHIN	85- 51
	SIC	
2608I	VALG	54- 99
2613-15F	MULB	40- 98
PHIN	SIC	
	VALG	
2613-15I	MULB	40- 99
PHIN	SIC	
	VALG	
2613-15N	MULB	40-100
PHIN	SIC	
	VALG	
2613-20F	MULB	40-109
PHIN	SIC	
	VALG	
2613-20I	MULB	40-110
PHIN	SIC	
	VALG	
2613-20N	MULB	41- 1
PHIN	SIC	
	VALG	
2613-25F	MULB	41- 27
PHIN	SIC	
	VALG	
2613-25I	MULB	41- 28
PHIN	SIC	
	VALG	
2613-25N	MULB	41- 29
PHIN	SIC	
	VALG	
2613-45F	MULB	41- 81
PHIN	SIC	
	VALG	
2613-45I	MULB	41- 82
PHIN	SIC	
	VALG	
2613-45N	MULB	41- 83
PHIN	SIC	
	VALG	
2614-15F	MULB	37- 43
PHIN	SIC	
	VALG	
2614-15I	MULB	37- 44
PHIN	SIC	
	VALG	
2614-15N	MULB	37- 45
PHIN	SIC	
	VALG	
2614-20F	MULB	37- 52
PHIN	SIC	
	VALG	
2614-20I	MULB	37- 53
PHIN	SIC	
	VALG	
2614-20N	MULB	37- 54
PHIN	SIC	
	VALG	
2614-25F	MULB	37- 46
PHIN	SIC	
	VALG	
2614-25I	MULB	37- 47
PHIN	SIC	
	VALG	

Δ-Registered with JEDEC by this manufacturer

1. TYPE No. CROSS INDEX

IN TYPE NUMBER SEQUENCE

TYPE No.	MFRS	Pg&Line
2614-25N	MULB	37 - 48
PHIN	SIC	
	VALG	
2614-45F	MULB	37 - 49
PHIN	SIC	
	VALG	
2614-45I	MULB	37 - 50
PHIN	SIC	
	VALG	
2614-45N	MULB	37 - 51
PHIN	SIC	
	VALG	
2670I	MULB	63 - 31
PHIN	SIC	
	VALG	
2670N	MULB	63 - 32
PHIN	SIC	
	VALG	
3101E	AMD	20 - 18
3255-9-7K	FSC	63 - 17
3256-9-7K	FSC	63 - 18
3257-9-7C	FSC	62 - 32
3258-9-7K	FSC	62 - 49
3260-91-7R	FSC	62 - 44
3260-92-7R	FSC	62 - 45
3307-4-5F	FSC	85 - 16
3326-4-5E	FSC	84 - 99
3329-9-5F	FSC	85 - 78
3330-9-5F	FSC	85 - 76
3331-9-5F	FSC	85 - 77
3333-9-7K	FSC	84 - 78
3341-9-7K	FSC	74 - 46
3342	FSC	84 - 84
3347	FSC	84-103
3348	FSC	84 - 3
3349	FSC	84 - 4
3383-9-5F	FSC	85 - 52
3501-9-6G	FSC	47 - 41
3507-9-6G	FSC	49 - 30
3512-9-6G	FSC	49 - 31
3512-9-7C	FSC	49 - 23
3513-9-7C	FSC	49 - 67
3514-91-7R	FSC	51 - 91
3514-92-7R	FSC	51 - 92
3532-9A-7K	FSC	27 - 85
3532-9B-7K	FSC	27 - 86
3534-9-7T	FSC	28 - 4
3539DC	FSC	27 - 73
3539UCD	EMM	27 - 78
3539UCP	EMM	27 - 79
3580-9-6G	FSC	50 - 9
3584-9-6G	FSC	50 - 12
3800-4-6H	FSC	77 - 23
3800-9-6H	FSC	77 - 24
3801-4-6H	FSC	83 - 45
3801-9-6H	FSC	83 - 46
4006BDC	FSC	75 - 61
4006BDM	FSC	75 - 62
4006BFC	FSC	75 - 63
4006BFM	FSC	75 - 64
4006BPC	FSC	75 - 65
4014BDC	FSC	80 - 19
4014BDM	FSC	80 - 20
4014BFC	FSC	80 - 21
4014BFM	FSC	80 - 22
4014BPC	FSC	80 - 23
4015BDC	FSC	74 - 17
4015BDM	FSC	74 - 18
4015BFC	FSC	74 - 19
4015BFM	FSC	74 - 20
4015BPC	FSC	74 - 21
4021BDC	FSC	80 - 68
4021BDM	FSC	80 - 69
4021BFC	FSC	80 - 70
4021BFM	FSC	80 - 71
4021BPC	FSC	80 - 72
4027-2F	MULB	38 - 60
PHIN	SIC	
4027-2I	MULB	38 - 61
PHIN	SIC	
4027-2N	MULB	38 - 62
PHIN	SIC	
4027-3F	MULB	38 - 82
PHIN	SIC	
4027-3I	MULB	38 - 83
PHIN	SIC	
4027-3N	MULB	38 - 84
PHIN	SIC	
4027-4F	MULB	39 - 4
PHIN	SIC	
4027-4I	MULB	39 - 5
PHIN	SIC	
4027-4N	MULB	39 - 6
PHIN	SIC	
4031BDC	FSC	84 - 46
4031BDM	FSC	84 - 47
4031BFC	FSC	84 - 48
4031BFM	FSC	84 - 49
4031BPC	FSC	84 - 50
4034BDC	FSC	77 - 54
4034BDM	FSC	77 - 55
4034BFC	FSC	77 - 56
4034BFM	FSC	77 - 57
4034BPC	FSC	77 - 58
4035BDC	FSC	66 - 85
4035BDM	FSC	66 - 86
4035BFC	FSC	66 - 87
4035BFM	FSC	66 - 88
4035BPC	FSC	66 - 89
4076BDC	FSC	68 - 18
4076BDM	FSC	68 - 19
4076BFC	FSC	68 - 20
4076BFM	FSC	68 - 21
4076BPC	FSC	68 - 22
4104UMC	EMM	36 - 51
4104USC	EMM	36 - 39
4200ACD	EMM	42 - 19
4200ACP	EMM	42 - 20
4200BCD	EMM	42 - 15
4200BCP	EMM	42 - 16
4200UMC	EMM	42 - 36
4200USC	EMM	42 - 21
4300ACD	EMM	42 - 13
4557BDC	FSC	84 - 22
4557BDM	FSC	84 - 23
4557BFC	FSC	84 - 24
4557BFM	FSC	84 - 25
4557BPC	FSC	84 - 26
4720BDC	FSC	23 - 99
4720BDM	FSC	23-100
4720BFC	FSC	23-101
4720BFM	FSC	23-102
4720BPC	FSC	23-103
4721BDC	FSC	25 - 68
4721BDM	FSC	25 - 69
4721BFC	FSC	25 - 70
4721BFM	FSC	25 - 71
4721BPC	FSC	25 - 72
4725BDC	FSC	20-106
4725BDM	FSC	20-107
4725BFC	FSC	20-108
4725BFM	FSC	20-109
4725BPC	FSC	20-110
4731BDC	FSC	84 - 86
4731BDM	FSC	84 - 87
4731BFC	FSC	84 - 88
4731BFM	FSC	84 - 89
4731BPC	FSC	84 - 90
4735BDC	FSC	49 - 18
4735BDM	FSC	49 - 19
4735BFC	FSC	49 - 20
4735BFM	FSC	49 - 21
4735BPC	FSC	49 - 22
4736BDC	FSC	30 - 77
4736BDM	FSC	30 - 78
4736BFC	FSC	30 - 79
4736BFM	FSC	30 - 80
4736BPC	FSC	30 - 81
5055J18	MMI	62 - 9
5055J	MMI	62 - 46
5086J24	MMI	88 - 29
5087J24	MMI	88 - 30
5155J18	MMI	62 - 10
5155J	MMI	62 - 47
5255-1J24	MMI	56 - 57
5256-1J24	MMI	56 - 58
5260-1J24	MMI	56 - 52
5261-1J24	MMI	56 - 53
5275-1J24	MMI	58 - 89
5276-1J24	MMI	58 - 90
5280-1J24	MMI	55 - 73
5280-2J24	MMI	55 - 48
5281-1J24	MMI	55 - 74
5281-2J24	MMI	55 - 49
5282-1J24	MMI	55 - 64
5283-1J24	MMI	55 - 65
5290J24	MMI	62-110
5291J24	MMI	63 - 1
5292J24	MMI	63 - 3
5293J24	MMI	63 - 4
5300-1J16	MMI	48 - 33
5301-1J16	MMI	48 - 34
5305-1J16	MMI	50 - 50
5306-1J16	MMI	50 - 51
5308-1J20	MMI	49 - 41
5309-1J20	MMI	49 - 42
5330-1J16	MMI	46 - 75
5331-1J16	MMI	46 - 76
5340-1J24	MMI	52 - 52
5341-1J24	MMI	52 - 53
5348-1J20	MMI	52 - 54
5349-1J20	MMI	52 - 55
5350-1J18	MMI	53 - 67
5351-1J18	MMI	53 - 68
5352-1J18	MMI	53 - 69
5353-1J18	MMI	53 - 70
5380-1J24	MMI	55 - 71
5381-1J24	MMI	55 - 72
5489DM	FSC	20 - 88
5489FM	FSC	20 - 89
5491ADM	FSC	82 - 29
5491AFM	FSC	82 - 30
5494DM	FSC	73 - 60
5494FM	FSC	73 - 61
5495ADM	FSC	69 - 48
5495AFM	FSC	69 - 49
5496DM	FSC	74 - 66
5496FM	FSC	74 - 67
6055J18	MMI	62 - 11
6056J24	MMI	62 - 12
6061J24	MMI	62 - 17
6062J24	MMI	62 - 18
6071J24	MMI	62 - 15
6072J24	MMI	62 - 23
6086J24	MMI	88 - 31
6087J24	MMI	88 - 32
6155J18	MMI	62 - 13
6156J24	MMI	62 - 14
6161J24	MMI	62 - 19
6162J24	MMI	62 - 20
6171J24	MMI	62 - 16
6172J24	MMI	62 - 24
6252-1J	MMI	53 - 20
6252-1N	MMI	53 - 21
6253-1F	MMI	53 - 22
6253-1J	MMI	53 - 23
6253-1N	MMI	53 - 24
6255-1F	MMI	56 - 54
6255-1J24	MMI	56 - 55
6256-1J24	MMI	56 - 56
6260-1J24	MMI	56 - 50
6261-1J24	MMI	56 - 51
6275-1J24	MMI	58 - 91
6276-1J24	MMI	58 - 92
6280-1J24	MMI	55 - 66
6280-2J24	MMI	55 - 29
6281-1J24	MMI	55 - 67
6281-2J24	MMI	55 - 30
6282-1J24	MMI	55 - 68
6283-1J24	MMI	55 - 69
6290J24	MMI	63 - 2
6291J24	MMI	63 - 5
6292J24	MMI	63 - 6
6293J24	MMI	63 - 7
6300-1J16	MMI	48 - 17
6301-1J16	MMI	48 - 18
6305-1J16	MMI	50 - 33
6306-1J16	MMI	50 - 34
6308-1J20	MMI	49 - 35
6308-1J	MMI	49 - 36
6309-1J20	MMI	49 - 37
6309-1J	MMI	49 - 38
6330-1J16	MMI	46 - 56
6330-1J	MMI	46 - 57
6331-1J16	MMI	46 - 58
6331-1J	MMI	46 - 59
6335-1J24	MMI	49 - 39
6336-1J24	MMI	49 - 40
6340-1J24	MMI	52 - 28
6341-1J24	MMI	52 - 29
6348-1J20	MMI	52 - 30
6349-1J20	MMI	52 - 31
6350-1J18	MMI	53 - 47
6351-1J18	MMI	53 - 48
6351-1J	MMI	53 - 49
6352-1J18	MMI	53 - 50
6352-1J	MMI	53 - 51
6353-1J18	MMI	53 - 52
6353-1J	MMI	53 - 53
6380-1J24	MMI	55 - 59
7110	ITL	87 - 10
7110-1	ITL	87 - 11
7110-2	ITL	87 - 12
7110-3	ITL	87 - 13
7489DC	FSC	20 - 90
7489FC	FSC	20 - 91
7489PC	FSC	20 - 92
7491ADC	FSC	82 - 31
7491AFC	FSC	82 - 32
7491APC	FSC	82 - 33
7491PC	TUNH	82 - 13
7494DC	FSC	73 - 62
7494FC	FSC	73 - 63
7494PC	FSC	73 - 64
	TUNH	
7495ADC	FSC	69 - 50
7495AFC	FSC	69 - 51
7495APC	FSC	69 - 52
	TUNH	
7496DC	FSC	74 - 68
7496FC	FSC	74 - 69
7496PC	FSC	74 - 70
	TUNH	
8108-3CD	EMM	37 - 89
8108-3MD	EMM	37 - 71
8108-5CD	EMM	37 - 91
8108-5MD	EMM	37 - 83
8118-3CJ	EMM	37 - 90
8118-3MD	EMM	37 - 72
8118-5CJ	EMM	37 - 92
8118-5MD	EMM	37 - 84
9030DC	FSC	18 - 1
9300DC	FSC	71 - 41
9300DM	FSC	71 - 42
9300FC	FSC	71 - 43
9300FM	FSC	71 - 44
9300PC	FSC	71 - 45
9328DC	FSC	82 - 97
9328DM	FSC	82 - 98
9328FC	FSC	82 - 99
9328FM	FSC	82-100
9328PC	FSC	82-101
9338DC	FSC	77 - 5
9338DM	FSC	77 - 6
9338FC	FSC	77 - 7
9338FM	FSC	77 - 8
9338PC	FSC	77 - 9
9403DC	FSC	74 - 44
9403DM	FSC	74 - 45
9410DC	FSC	20 - 59
9410DM	FSC	20 - 60
9423DC	FSC	74 - 47
9423FC	FSC	74 - 48
9423PC	FSC	74 - 49
10139F	MULB	46 - 39
PHIN	SIC	
	VALG	
10139N	PHIN	46 - 40
SIC	VALG	
10140F	MULB	21 - 31
PHIN	SIC	
10142F	MULB	21 - 23
PHIN	SIC	
10142I	MULB	21 - 24
PHIN	SIC	
10145F	MULB	19 - 51
PHIN	SIC	
10145I	MULB	19 - 52
PHIN	SIC	
10148F	MULB	21 - 32
PHIN	SIC	
10149F	MULB	47-105
PHIN	SIC	
	VALG	
10151F	MULB	21 - 33
PHIN	SIC	
10155F	PHIN	87 - 4
SIC	VALG	
10155N	PHIN	87 - 5
SIC	VALG	
10176F	MULB	76 - 83
PHIN	SIC	
10541DM	FSC	73 - 26
21143MA	EMM	36 - 53
29611DC	RTN	50 - 26
29611DM	RTN	50 - 46
29611FM	RTN	50 - 47
29613DC	RTN	50 - 35
29613DM	RTN	50 - 52
29613FM	RTN	50 - 53
29621DC	RTN	52 - 23
29621DM	RTN	52 - 56
29621FM	RTN	52 - 57
29623DC	RTN	52 - 32
29623DM	RTN	52 - 58
29623FM	RTN	52 - 59
29631ADC	RTN	53-104
29631ADM	RTN	54 - 2
29631AFM	RTN	55 - 32
29631DC	RTN	55 - 12
29631DM	RTN	55 - 13
29631FM	RTN	55 - 23
29633ADC	RTN	54 - 1
29633ADM	RTN	54 - 3
29633AFM	RTN	55 - 50
29633DC	RTN	55 - 24
29633DM	RTN	55 - 25
29633FM	RTN	55 - 31
29635DC	RTN	55 - 14
29635DM	RTN	55 - 15
29637DC	RTN	55 - 26
29637DM	RTN	55 - 27
29651ADC	RTN	56 - 82
29651ADM	RTN	56 - 84
29651AFM	RTN	56-107
29651DC	RTN	57 - 8
29651DM	RTN	57 - 14
29651FM	RTN	57 - 12
29653ADC	RTN	56 - 83
29653ADM	RTN	56 - 85
29653AFM	RTN	57 - 7
29653DC	RTN	57 - 11
29653DM	RTN	57 - 15
29653FM	RTN	57 - 13
29681ADC	RTN	58 - 50
29681ADM	RTN	58 - 63
29681AFM	RTN	57 - 37
29681ASC	RTN	58 - 51
29681ASM	RTN	58 - 64
29681DC	RTN	58 - 69
29681DM	RTN	58 - 83
29681FM	RTN	57 - 39
29681SC	RTN	58 - 70
29681SM	RTN	58 - 84
29683ADC	RTN	58 - 52
29683ADM	RTN	58 - 67
29683AFM	RTN	57 - 38
29683ASC	RTN	58 - 53
29683ASM	RTN	58 - 68
29683DC	RTN	58 - 80
29683DM	RTN	58 - 87
29683FM	RTN	57 - 40
29683SC	RTN	58 - 71
29683SM	RTN	58 - 88
29693DC	RTN	88 - 6
29693DM	RTN	88 - 7
29693FM	RTN	88 - 8
31013E	AMD	20 - 19
33511DC	FSC	84 - 17
33512DC	FSC	84 - 15
33571	FSC	84-107
33572	FSC	84-104
34014DC	FSC	77 - 59
34014DM	FSC	77 - 60
34014FC	FSC	77 - 61
34014FM	FSC	77 - 62
34014PC	FSC	77 - 63
34015DC	FSC	73 - 74
34015DM	FSC	73 - 75
34015FC	FSC	73 - 76
34015FM	FSC	73 - 77
34015PC	FSC	73 - 78
34021DC	FSC	80 - 48
34021DM	FSC	80 - 49
34021FC	FSC	80 - 50
34021FM	FSC	80 - 51
34021PC	FSC	80 - 52
34035DC	FSC	66-102
34035DM	FSC	67 - 1
34035FC	FSC	67 - 2
34035FM	FSC	67 - 3
34035PC	FSC	67 - 4
34720DC	FSC	23 - 88
34720DM	FSC	23 - 89
34720FC	FSC	23 - 90
34720FM	FSC	23 - 91
34720PC	FSC	23 - 92
34725DC	FSC	20-101
34725DM	FSC	20-102
34725FC	FSC	20-103
34725FM	FSC	20-104
34725PC	FSC	20-105
35391CD	EMM	27 - 74
35391CP	EMM	27 - 75
35391DC	FSC	27 - 71
35392CD	EMM	27 - 76
35392CP	EMM	27 - 77
35392DC	FSC	27 - 72
40194BDC	FSC	66 - 90
40194BDM	FSC	66 - 91
40194BFC	FSC	66 - 92
40194BFM	FSC	66 - 93
40194BPC	FSC	66 - 94
40195BDC	FSC	66 - 95
40195BDM	FSC	66 - 96
40195BFC	FSC	66 - 97
40195BFM	FSC	66 - 98
40195BPC	FSC	66 - 99
54164DM	FSC	81 - 59
54164FM	FSC	81 - 60
54165DM	FSC	77 - 74
54165FM	FSC	77 - 75
54166DM	FSC	77 - 89
54166FM	FSC	77 - 90
54170DM	FSC	18 - 45
54170FM	FSC	18 - 46
54178DM	FSC	69 - 53
54178FM	FSC	69 - 54
54179DM	FSC	69 - 55
54179FM	FSC	69 - 56
54194DM	FSC	69 - 57
54194FM	FSC	69 - 58
54195DM	FSC	71 - 46
54195FM	FSC	71 - 47
54198DM	FSC	77 - 91
54198FM	FSC	77 - 92
54199DM	FSC	77 - 93
54199FM	FSC	77 - 94
57401J16	MMI	84 - 92
67401J16	MMI	84 - 93
67402J18	MMI	84 - 98
74164DC	FSC	81 - 61
74164FC	FSC	81 - 62
74164PC	FSC	81 - 63
	TUNH	
74165DC	FSC	77 - 76
74165FC	FSC	77 - 77
74165PC	FSC	77 - 78
	TUNH	
74166DC	FSC	77 - 95
74166FC	FSC	77 - 96
74166PC	FSC	77 - 97
	TUNH	
74170DC	FSC	18 - 47
74170FC	FSC	18 - 48
74170PC	FSC	18 - 49
	TUNH	
74178DC	FSC	69 - 59
74178FC	FSC	69 - 60
74178PC	FSC	69 - 61
	TUNH	
74179DC	FSC	69 - 62
74179FC	FSC	69 - 63
74179PC	FSC	69 - 64
	TUNH	
74194DC	FSC	69 - 65
74194FC	FSC	69 - 66
74194PC	FSC	69 - 67
	TUNH	
74195DC	FSC	71 - 48
74195FC	FSC	71 - 49
74195PC	FSC	71 - 50
	TUNH	
74198DC	FSC	77 - 98
74198FC	FSC	77 - 99
74198PC	FSC	77-100
	TUNH	
74199DC	FSC	77-101
74199FC	FSC	77-102
74199PC	FSC	77-103
	TUNH	
93403DC	AMD	20 - 93
	FSC	
93403DM	AMD	20 - 61
93403FM	AMD	20 - 62
93403PC	AMD	20 - 63
93407ADC	FSC	19 - 9
93407AFC	FSC	19 - 10
93407BDC	FSC	19 - 11
93407BDM	FSC	19 - 13
93407BFC	FSC	19 - 12
93407BFM	FSC	19 - 14
93410ADC	FSC	23 - 40
93410AFC	FSC	23 - 41
93410APC	FSC	23 - 42
93410DC	FSC	23 - 56
93410DM	FSC	23 - 64
93410FC	FSC	23 - 57
93410FM	FSC	23 - 65
93410PC	FSC	23 - 58
93411ADC	FSC	23 - 43
93411DC	FSC	23 - 52
93411DM	FSC	23 - 61
93411FM	FSC	23 - 62
93411PC	FSC	23 - 53
93412DC	FSC	24 - 55
93412DM	FSC	24 - 63
93412FC	FSC	24 - 56
93412FM	FSC	24 - 64
93415ADC	FSC	28 - 80
93415AFC	FSC	28 - 81
93415AI	MULB	28 - 88
	PHIN	
93415APC	FSC	28 - 82
93415DC	FSC	28 - 89
93415DM	FSC	29 - 2
93415FC	FSC	28 - 90
93415FM	FSC	29 - 3
93415PC	FSC	28 - 91

Δ-Registered with JEDEC by this manufacturer

1. TYPE No. CROSS INDEX

IN TYPE NUMBER SEQUENCE

TYPE No.	MFRS	Pg&Line
93417DC	FSC	48- 3
93417DM	FSC	48- 19
93417FC	FSC	48- 4
93417FM	FSC	48- 20
93417PC	FSC	48- 5
93419DC	FSC	21- 67
93419DM	FSC	21- 69
93421ADC	FSC	23- 38
93421DC	FSC	23- 45
93421DM	FSC	23- 59
93421FM	FSC	23- 60
93421PC	FSC	23- 46
93422DC	FSC	24- 57
93422DM	FSC	24- 65
93422FC	FSC	24- 58
93422FM	FSC	24- 66
93425ADC	FSC	28- 92
93425AI	MULB	28- 93
	PHIN	
93425APC	FSC	28- 94
93425DC	FSC	29- 12
93425DM	FSC	29- 17
93425FM	FSC	29- 18
93425PC	FSC	29- 13
93427DC	FSC	48- 6
93427DM	FSC	48- 21
93427FC	FSC	48- 7
93427FM	FSC	48- 22
93427PC	FSC	48- 8
93431DC	FSC	49- 89
93431DM	FSC	49- 97
93431FC	FSC	49- 90
93431FM	FSC	49- 98
93431PC	FSC	49- 91
93432DC	FSC	51- 43
93432DM	FSC	51- 52
93432FC	FSC	51- 44
93432FM	FSC	51- 53
93432PC	FSC	51- 45
93436DC	FSC	50- 17
93436DM	FSC	50- 36
93436FC	FSC	50- 18
93436FM	FSC	50- 37
93436PC	FSC	50- 19
93438DC	FSC	52- 5
93438DM	FSC	52- 33
93438FC	FSC	52- 6
93438FM	FSC	52- 34
93438PC	FSC	52- 7
93441DC	FSC	49- 92
93441DM	FSC	49- 99
93441FC	FSC	49- 93
93441FM	FSC	49-100
93441PC	FSC	49- 94
93442DC	FSC	51- 46
93442DM	FSC	51- 54
93442FC	FSC	51- 47
93442FM	FSC	51- 55
93442PC	FSC	51- 48
93446DC	FSC	50- 20
93446DM	FSC	50- 38
93446FC	FSC	50- 21
93446FM	FSC	50- 39
93446PC	FSC	50- 22
93448DC	FSC	52- 8
93448DM	FSC	52- 35
93448FC	FSC	52- 9
93448FM	FSC	52- 36
93448PC	FSC	52- 10
93450DC	FSC	55- 1
93450DM	FSC	55- 2
93450FC	FSC	55- 3
93450PC	FSC	55- 4
93451DC	FSC	55- 5
93451DM	FSC	55- 6
93451FC	FSC	55- 7
93451PC	FSC	55- 8
93452DC	FSC	53- 43
93452DM	FSC	53- 61
93452PC	FSC	53- 44
93453DC	FSC	53- 45
93453DM	FSC	53- 62
93453PC	FSC	53- 46
93454DC	FSC	54- 31
93454DM	FSC	54- 37
93454FC	FSC	54- 32
93454FM	FSC	54- 38
93454PC	FSC	54- 33
93457DC	FSC	47- 62
93457DM	FSC	47- 72
93457FC	FSC	47- 63
93457FM	FSC	47- 73
93457PC	FSC	47- 64
93458DC	FSC	87- 80
93458DM	FSC	87- 81
93459DC	FSC	87- 82
93459DM	FSC	87- 83
93464DC	FSC	54- 34
93464DM	FSC	54- 39
93464FC	FSC	54- 35
93464FM	FSC	54- 40
93464PC	FSC	54- 36
93467DC	FSC	47- 65
93467DM	FSC	47- 74
93467FC	FSC	47- 66
93467FM	FSC	47- 75
93467PC	FSC	47- 67
93470DC	FSC	39-106
93470DM	FSC	40- 1
93470PC	FSC	40- 2
93471DC	FSC	40- 3
93471DM	FSC	40- 4
93471PC	FSC	40- 5
93481ADC	FSC	38- 42
93481AFC	FSC	38- 43
93481APC	FSC	38- 44
93481DC	FSC	38- 45
93481FC	FSC	38- 46
93481PC	FSC	38- 47
95000DC	FSC	73- 13
95400DC	FSC	19- 58
95401DC	FSC	18- 2
340174DC	FSC	76- 3
340174DM	FSC	76- 4
340174FC	FSC	76- 5
340174FM	FSC	76- 6
340174PC	FSC	76- 7
340175DC	FSC	73- 47
340175DM	FSC	73- 48
340175FC	FSC	73- 49
340175FM	FSC	73- 50
340175PC	FSC	73- 51
340194DC	FSC	65- 70
340194DM	FSC	65- 71
340194FC	FSC	65- 72
340194FM	FSC	65- 73
340194PC	FSC	65- 74
340195DC	FSC	65- 75
340195DM	FSC	65- 76
340195FC	FSC	65- 77
340195FM	FSC	65- 78
340195PC	FSC	65- 79
Am9112APC	AMD	25- 89
AM25L02DC	AMD	77- 35
AM25L02DM	AMD	77- 36
AM25L02FM	AMD	77- 37
AM25L02PC	AMD	77- 38
AM25L03DC	AMD	77- 39
AM25L03DM	AMD	77- 40
AM25L03FM	AMD	77- 41
AM25L03PC	AMD	77- 42
AM25L04DC	AMD	83- 58
AM25L04DM	AMD	83- 63
AM25L04FM	AMD	83- 64
AM25L04PC	AMD	83- 65
AM25LS07DC	AMD	76- 66
AM25LS07DM	AMD	76- 67
AM25LS07FM	AMD	76- 68
AM25LS07PC	AMD	76- 69
AM25LS08DC	AMD	72- 17
AM25LS08DM	AMD	72- 18
AM25LS08FM	AMD	72- 19
AM25LS08PC	AMD	72- 20
AM25LS09DC	AMD	72- 21
AM25LS09DM	AMD	72- 22
AM25LS09FM	AMD	72- 23
AM25LS09PC	AMD	72- 24
AM25LS22DC	AMD	80-102
AM25LS22DM	AMD	81- 1
AM25LS22FM	AMD	81- 2
AM25LS22PC	AMD	81- 3
AM25LS23DC	AMD	82- 5
AM25LS23DM	AMD	82- 6
AM25LS23FM	AMD	82- 7
AM25LS23PC	AMD	82- 8
AM25LS164DC	AMD	82- 1
AM25LS164DM	AMD	82- 2
AM25LS164FM	AMD	82- 3
AM25LS164PC	AMD	82- 4
AM25LS174DC	AMD	76- 70
AM25LS174DM	AMD	76- 71
AM25LS174FM	AMD	76- 72
AM25LS174PC	AMD	76- 73
AM25LS175DC	AMD	72- 25
AM25LS175DM	AMD	72- 26
AM25LS175FM	AMD	72- 27
AM25LS175PC	AMD	72- 28
AM25LS194ADC	AMD	71- 98
AM25LS194ADM	AMD	71- 99
AM25LS194AFM	AMD	71-100
AM25LS194APC	AMD	71-101
AM25LS195ADC	AMD	71-102
AM25LS195ADM	AMD	71-103
AM25LS195AFM	AMD	71-104
AM25LS195APC	AMD	71-105
AM25LS273DC	AMD	78- 40
AM25LS273DM	AMD	78- 41
AM25LS273FM	AMD	78- 42
AM25LS273PC	AMD	78- 43
AM25LS299DC	AMD	82- 9
AM25LS299DM	AMD	82- 10
AM25LS299FM	AMD	82- 11
AM25LS299PC	AMD	82- 12
AM25LS374DC	AMD	78- 44
AM25LS374DM	AMD	78- 45
AM25LS374FM	AMD	78- 46
AM25LS374PC	AMD	78- 47
AM25LS377BDC	AMD	78- 48
AM25LS377BDM	AMD	78- 49
AM25LS377BFM	AMD	78- 50
AM25LS377BPC	AMD	78- 51
AM25LS377DC	AMD	78- 52
AM25LS377DM	AMD	78- 53
AM25LS377FM	AMD	78- 54
AM25LS377PC	AMD	78- 55
AM25LS2519DC	AMD	65- 37
AM25LS2519DM	AMD	65- 38
AM25LS2519FM	AMD	65- 39
AM25LS2519PC	AMD	65- 40
AM25LS2520DC	AMD	79- 29
AM25LS2520DM	AMD	79- 30
AM25LS2520PC	AMD	79- 31
AM25S07DC	AMD	75- 84
AM25S07DM	AMD	75- 85
AM25S07FM	AMD	75- 86
AM25S07PC	AMD	75- 87
AM25S08DC	AMD	65- 41
AM25S08DM	AMD	65- 42
AM25S08FM	AMD	65- 43
AM25S08PC	AMD	65- 44
AM25S09DC	AMD	65- 45
AM25S09DM	AMD	65- 46
AM25S09FM	AMD	65- 47
AM25S09PC	AMD	65- 48
AM25S10DC	AMD	65- 49
AM25S10DM	AMD	65- 50
AM25S10FM	AMD	65- 51
AM25S10PC	AMD	65- 52
AM25S18DC	AMD	72-103
AM25S18DM	AMD	72-104
AM25S18FM	AMD	72-105
AM25S18PC	AMD	72-106
AM27LS00DC	AMD	22-103
AM27LS00DM	AMD	23- 14
AM27LS00FM	AMD	23- 15
AM27LS00PC	AMD	22-104
AM27LS01DC	AMD	22-105
AM27LS01DM	AMD	23- 16
AM27LS01FM	AMD	23- 17
AM27LS01PC	AMD	22-106
AM27LS02DC	AMD	19- 41
AM27LS02DM	AMD	19- 45
AM27LS02FM	AMD	19- 46
AM27LS02PC	AMD	19- 42
AM27LS03DC	AMD	19- 43
AM27LS03DM	AMD	19- 47
AM27LS03FM	AMD	19- 48
AM27LS03PC	AMD	19- 44
AM27LS18DC	AMD	46- 74
AM27LS18DM	AMD	46- 33
AM27LS18FM	AMD	46- 34
AM27LS19DC	AMD	46- 13
AM27LS19DM	AMD	46- 14
AM27LS19FM	AMD	46- 15
AM27S02ADC	AMD	19- 33
AM27S02ADM	AMD	19- 37
AM27S02AFM	AMD	19- 38
AM27S02APC	AMD	19- 34
AM27S02DC	AMD	19-108
AM27S02DM	AMD	19-109
AM27S02FM	AMD	19-110
AM27S02PC	AMD	20- 1
AM27S03ADC	AMD	19- 35
AM27S03ADM	AMD	19- 39
AM27S03AFM	AMD	19- 40
AM27S03APC	AMD	19- 36
AM27S03DC	AMD	20- 2
AM27S03DM	AMD	20- 3
AM27S03FM	AMD	20- 4
AM27S03PC	AMD	20- 5
AM27S08DC	AMD	46- 60
AM27S08DM	AMD	46- 61
AM27S09DC	AMD	46- 62
AM27S09DM	AMD	46- 63
AM27S10DC	AMD	48- 23
AM27S10DM	AMD	48- 24
AM27S11DC	AMD	48- 25
AM27S11DM	AMD	48- 26
AM27S12DC	AMD	50- 23
AM27S12DM	AMD	50- 40
AM27S12FM	AMD	50- 41
AM27S13DC	AMD	50- 24
AM27S13DM	AMD	50- 42
AM27S13FM	AMD	50- 43
AM27S15DC	AMD	52- 15
AM27S15DM	AMD	52- 64
AM27S18DC	AMD	46- 52
AM27S18DM	AMD	46- 64
AM27S18FM	AMD	46- 65
AM27S19DC	AMD	46- 53
AM27S19DM	AMD	46- 66
AM27S19FM	AMD	46- 67
AM27S20DC	AMD	48- 9
AM27S20DM	AMD	48- 27
AM27S20FM	AMD	48- 28
AM27S21DC	AMD	48- 10
AM27S21DM	AMD	48- 29
AM27S21FM	AMD	48- 30
AM27S25DC	AMD	51- 96
AM27S25DM	AMD	51- 97
AM27S26DC	AMD	51-105
AM27S26DM	AMD	51-106
AM27S27DC	AMD	51-107
AM27S27DM	AMD	52- 1
AM27S28DC	AMD	52- 11
AM27S28DM	AMD	52- 37
AM27S29DC	AMD	52- 12
AM27S29DM	AMD	52- 38
AM27S30DC	AMD	52- 13
AM27S30DM	AMD	52- 39
AM27S31DC	AMD	52- 14
AM27S31DM	AMD	52- 40
AM27S32DC	AMD	53- 79
AM27S32DM	AMD	53- 83
AM27S32PC	AMD	53- 80
AM27S33DC	AMD	53- 81
AM27S33DM	AMD	53- 84
AM27S33PC	AMD	53- 82
AM27S80DC	AMD	54- 25
AM27S80DM	AMD	54- 26
AM27S80XX	AMD	54- 27
AM27S81DC	AMD	54- 28
AM27S81DM	AMD	54- 29
AM27S81XX	AMD	54- 30
AM27S180DC	AMD	55- 33
AM27S180DM	AMD	55- 51
AM27S181DC	AMD	55- 34
AM27S181DM	AMD	55- 52
AM27S184DC	AMD	56- 99
AM27S184DM	AMD	56-100
AM27S185DC	AMD	56-101
AM27S185DM	AMD	57- 25
AM31L01DC	AMD	20- 97
AM31L01DM	AMD	20- 78
AM31L01E	AMD	20- 81
AM31L01FM	AMD	20- 79
AM31L01PC	AMD	20- 80
AM31L013E	AMD	20- 82
AM54S194J	AMD	73- 5
AM54S194W	AMD	73- 6
AM54S195J	AMD	73- 7
AM54S195W	AMD	73- 8
AM74S194J	AMD	73- 9
AM74S194N	AMD	73- 10
AM74S195J	AMD	73- 11
AM74S195N	AMD	73- 12
AM90L44BDC	AMD	42- 85
AM90L44BDM	AMD	42- 86
AM90L44BPC	AMD	42- 87
AM90L44CDC	AMD	42- 56
AM90L44CDM	AMD	42- 57
AM90L44CPC	AMD	42- 58
AM90L44DDC	AMD	42- 37
AM90L44DPC	AMD	42- 38
AM90L60CDC	AMD	39- 35
AM90L60CPC	AMD	39- 36
AM90L60DDC	AMD	39- 7
AM90L60DPC	AMD	39- 8
AM90L60EDC	AMD	38- 85
AM90L60EPC	AMD	38- 86
AM91L01ADC	AMD	27- 45
AM91L01ADM	AMD	27- 46
AM91L01AFM	AMD	27- 47
AM91L01APC	AMD	27- 48
AM91L01BDC	AMD	27- 14
AM91L01BDM	AMD	27- 15
AM91L01BFM	AMD	27- 16
AM91L01BPC	AMD	27- 17
AM91L01CDC	AMD	26-106
AM91L01CDM	AMD	26-107
AM91L01CPC	AMD	26-108
AM91L02ADC	AMD	32- 29
AM91L02ADM	AMD	32- 30
AM91L02AFM	AMD	32- 31
AM91L02APC	AMD	32- 32
AM91L02BDC	AMD	31- 91
AM91L02BDM	AMD	31- 92
AM91L02BFM	AMD	31- 93
AM91L02BPC	AMD	31- 94
AM91L02CDC	AMD	31- 45
AM91L02CDM	AMD	31- 46
AM91L02CPC	AMD	31- 47
AM91L02DC	AMD	32- 59
AM91L02DM	AMD	32- 60
AM91L02FM	AMD	32- 61
AM91L02PC	AMD	32- 62
AM91L11ADC	AMD	27- 49
AM91L11ADM	AMD	27- 50
AM91L11AFM	AMD	27- 51
AM91L11APC	AMD	27- 52
AM91L11BDC	AMD	27- 18
AM91L11BDM	AMD	27- 19
AM91L11BFM	AMD	27- 20
AM91L11BPC	AMD	27- 21
AM91L11CDC	AMD	26-109
AM91L11CDM	AMD	26-110
AM91L11CPC	AMD	27- 1
AM91L12ADC	AMD	27- 53
AM91L12ADM	AMD	27- 54
AM91L12AFM	AMD	27- 55
AM91L12APC	AMD	27- 56
AM91L12BDC	AMD	27- 22
AM91L12BDM	AMD	27- 23
AM91L12BFM	AMD	27- 24
AM91L12BPC	AMD	27- 25
AM91L12CDC	AMD	27- 2
AM91L12CDM	AMD	27- 3
AM91L12CPC	AMD	27- 4
AM91L14BDC	AMD	36- 74
AM91L14BDM	AMD	36- 75
AM91L14BPC	AMD	36- 76
AM91L14CDC	AMD	36- 54
AM91L14CDM	AMD	36- 55
AM91L14CPC	AMD	36- 56
AM91L24BDC	AMD	36- 82
AM91L24BDM	AMD	36- 83
AM91L24BPC	AMD	36- 84
AM91L24CDC	AMD	36- 57
AM91L24CDM	AMD	36- 58
AM91L24CPC	AMD	36- 59
AM91L30ADC	AMD	37- 33
AM91L30ADM	AMD	37- 34
AM91L30APC	AMD	37- 35
AM91L30BDC	AMD	37- 23
AM91L30BDM	AMD	37- 24
AM91L30BPC	AMD	37- 25
AM91L30CDC	AMD	37- 13
AM91L30CDM	AMD	37- 14
AM91L30CPC	AMD	37- 15
AM91L30DDC	AMD	37- 7
AM91L30DPC	AMD	37- 8
AM91L31ADC	AMD	37- 36
AM91L31ADM	AMD	37- 37
AM91L31BDC	AMD	37- 26
AM91L31BDM	AMD	37- 27
AM91L31CDC	AMD	37- 16
AM91L31CDM	AMD	37- 17
AM91L31DDC	AMD	37- 9
AM91L40ADC	AMD	42- 97
AM91L40ADM	AMD	42- 98
AM91L40APC	AMD	42- 99
AM91L40BDC	AMD	42- 79
AM91L40BDM	AMD	42- 80
AM91L40BPC	AMD	42- 81
AM91L40CDC	AMD	42- 59
AM91L40CDM	AMD	42- 60
AM91L40CPC	AMD	42- 61
AM91L40DDC	AMD	42- 39
AM91L40DPC	AMD	42- 40
AM91L41DDC	AMD	40- 49
AM92L44BDC	AMD	42- 88
AM92L44BDM	AMD	42- 89
AM92L44BPC	AMD	42- 90
AM92L44CDC	AMD	42- 62
AM92L44CDM	AMD	42- 63
AM92L44CPC	AMD	42- 64
AM92L44DDC	AMD	42- 41
AM92L44DPC	AMD	42- 65
AM93L00DC	AMD	66- 74
AM93L00DM	AMD	66- 75
AM93L00FM	AMD	66- 76
AM93L00PC	AMD	66- 77
AM93L28DC	AMD	82- 93
AM93L28DM	AMD	82- 94
AM93L28FM	AMD	82- 95
AM93L28PC	AMD	82- 96
AM93L38DC	AMD	77- 10
AM93L38DM	AMD	77- 11
AM93L38FM	AMD	77- 12
AM93L38PC	AMD	77- 13
AM1402A51E	AMD	85- 68
AM1402A51F	AMD	85- 69
AM1402A59F#1	AMD	85- 70
AM1402A59F#2	AMD	85- 59
AM1402A#1	AMD	85- 64
AM1402A#2	AMD	85- 60
AM1402ADM#1	AMD	85- 65
AM1402ADM#2	AMD	85- 61
AM1402APC#1	AMD	85- 66
AM1402APC#2	AMD	85- 62
AM1403A51F	AMD	85-103
AM1403A51T	AMD	85-104
AM1403A59F#1	AMD	85-105
AM1403A59F#2	AMD	85- 94
AM1403A#1	AMD	85- 99
AM1403A#2	AMD	85- 95
AM1403AHM#1	AMD	85-100
AM1403AHM#2	AMD	85- 96
AM1403APC#1	AMD	85-101
AM1403APC#2	AMD	85- 97
AM1404A51F	AMD	86- 12
AM1404A51T	AMD	86- 13
AM1404A59F#1	AMD	86- 14
AM1404A59F#2	AMD	86- 1
AM1404A#1	AMD	86- 9
AM1404A#2	AMD	86- 2
AM1404AHM#1	AMD	86- 10
AM1404AHM#2	AMD	86- 3
AM1404APC#1	AMD	86- 11
AM1404APC#2	AMD	86- 4
AM1406HM	AMD	85- 6
AM1407HM	AMD	85- 7
AM1506HC	AMD	85- 8
AM1507HC	AMD	85- 9
AM1702A	AMD	49- 56
AM1702A-1	AMD	49- 48
AM1702A-2	AMD	49- 52
AM1702AL	AMD	49- 57
AM1702AL-1	AMD	49- 49
AM1702AL-2	AMD	49- 53
AM2502DC	AMD	77- 64
AM2502DM	AMD	77- 65
AM2502FM	AMD	77- 66
AM2502PC	AMD	77- 67
AM2503DC	AMD	77- 68
AM2503DM	AMD	77- 69
AM2503FM	AMD	77- 70
AM2503PC	AMD	77- 71
AM2504DC	AMD	83- 59
AM2504DM	AMD	83- 60
AM2504FM	AMD	83- 61
AM2504PC	AMD	83- 62
AM2708DC	AMD	56- 12
AM2708DM	AMD	56- 13
AM2802DC	AMD	85- 71
AM2802DM	AMD	85- 72
AM2802PC	AMD	85- 73
AM2803HC	AMD	85-106
AM2803HM	AMD	85-107
AM2803PC	AMD	85-108
AM2804HC	AMD	86- 15
AM2804HM	AMD	86- 16
AM2804PC	AMD	86- 17
AM2805HC	AMD	85- 84

Δ-Registered with JEDEC by this manufacturer

1. TYPE No. CROSS INDEX

IN TYPE NUMBER SEQUENCE

TYPE No.	MFRS	Pg&Line
AM2805HM	AMD	85- 81
AM2806HC	AMD	86- 6
AM2806HM	AMD	86- 5
AM2807PC	AMD	85- 85
AM2808PC	AMD	86- 7
AM2809HC	AMD	85- 33
AM2809HM	AMD	85- 28
AM2809PC	AMD	85- 34
AM2810DC	AMD	85- 29
AM2810DM	AMD	85- 30
AM2812ADC	AMD	84- 7
AM2812ADM	AMD	84- 8
AM2812DC	AMD	84- 5
AM2812DM	AMD	84- 6
AM2813ADC	AMD	84- 11
AM2813ADM	AMD	84- 12
AM2813DC	AMD	84- 9
AM2813DM	AMD	84- 10
AM2814DC	AMD	85- 35
AM2814DM	AMD	85- 36
AM2814PC	AMD	85- 37
AM2833DC	AMD	86- 18
AM2833DM	AMD	86- 19
AM2833PC	AMD	86- 20
AM2841DC	AMD	84- 79
AM2841DM	AMD	84- 80
AM2855DC	AMD	85- 41
AM2855DM	AMD	85- 42
AM2855PC	AMD	85- 43
AM2856HC	AMD	85- 55
AM2856HM	AMD	85- 56
AM2857DC	AMD	85- 89
AM2857DM	AMD	85- 90
AM2857PC	AMD	85- 91
AM3101ADC	AMD	20- 6
AM3101ADM	AMD	20- 7
AM3101AFM	AMD	20- 8
AM3101APC	AMD	20- 9
AM3101DM	AMD	20- 64
AM3101FM	AMD	20- 65
AM3341DC	AMD	84- 81
AM3341DM	AMD	84- 82
AM3341PC	AMD	84- 83
AM3355DC	AMD	86- 21
AM3355PC	AMD	86- 22
AM9016CDC	AMD	44- 73
AM9016CPC	AMD	44- 74
AM9016DDC	AMD	44- 38
AM9016DPC	AMD	44- 39
AM9016EDC	AMD	43-105
AM9016EPC	AMD	43-106
AM9016FDC	AMD	43- 68
AM9016FPC	AMD	43- 69
AM9044BDC	AMD	42- 91
AM9044BDM	AMD	42- 92
AM9044BPC	AMD	42- 93
AM9044CDC	AMD	42- 66
AM9044CDM	AMD	42- 67
AM9044CPC	AMD	42- 68
AM9044DDC	AMD	42- 42
AM9044DDM	AMD	42- 43
AM9044DPC	AMD	42- 44
AM9044EDC	AMD	42- 22
AM9044EPC	AMD	42- 23
AM9050CDC	AMD	39- 37
AM9050CPC	AMD	39- 38
AM9050DDC	AMD	39- 9
AM9050DPC	AMD	39- 10
AM9050EDC	AMD	38- 87
AM9050EPC	AMD	38- 88
AM9060CDC	AMD	39- 39
AM9060CPC	AMD	39- 40
AM9060DDC	AMD	39- 11
AM9060DPC	AMD	39- 12
AM9060EDC	AMD	38- 89
AM9060EPC	AMD	38- 90
AM9101	AMD	25- 96
AM9101ADC	AMD	27- 57
AM9101ADM	AMD	27- 58
AM9101AFM	AMD	27- 59
AM9101APC	AMD	27- 60
AM9101BDC	AMD	27- 26
AM9101BDM	AMD	27- 27
AM9101BFM	AMD	27- 28
AM9101BPC	AMD	27- 29
AM9101CDC	AMD	27- 5
AM9101CDM	AMD	27- 6
AM9101CPC	AMD	27- 7
AM9101DDC	AMD	26-100
AM9101DPC	AMD	26-101
AM9101EDC	AMD	25- 90
AM9101EPC	AMD	25- 91
AM9102ADC	AMD	32- 33
AM9102ADM	AMD	32- 34
AM9102AFM	AMD	32- 35
AM9102APC	AMD	32- 36
AM9102BDC	AMD	31- 95
AM9102BDM	AMD	31- 96
AM9102BFM	AMD	31- 97
AM9102BPC	AMD	31- 98
AM9102CDC	AMD	31- 48
AM9102CDM	AMD	31- 49
AM9102CPC	AMD	31- 50
AM9102DC	AMD	32- 63
AM9102DDC	AMD	31- 29
AM9102DM	AMD	32- 64
AM9102DPC	AMD	31- 30
AM9102EDC	AMD	30- 84
AM9102EPC	AMD	30- 85
AM9102FM	AMD	32- 65
AM9102PC	AMD	32- 66
AM9111	AMD	25- 97
AM9111ADC	AMD	27- 61
AM9111ADM	AMD	27- 62
AM9111AFM	AMD	27- 63
AM9111APC	AMD	27- 64
AM9111BDC	AMD	27- 30
AM9111BDM	AMD	27- 31
AM9111BFM	AMD	27- 32
AM9111BPC	AMD	27- 33
AM9111CDC	AMD	27- 8
AM9111CDM	AMD	27- 9
AM9111CPC	AMD	27- 10
AM9111DDC	AMD	26-102
AM9111DPC	AMD	26-103
AM9111EDC	AMD	25- 92
AM9111EPC	AMD	25- 93
AM9112	AMD	25- 98
AM9112ADC	AMD	27- 65
AM9112ADM	AMD	27- 66
AM9112AFM	AMD	27- 67
AM9112APC	AMD	27- 68
AM9112BDC	AMD	27- 34
AM9112BDM	AMD	27- 35
AM9112BFM	AMD	27- 36
AM9112BPC	AMD	27- 37
AM9112CDC	AMD	27- 11
AM9112CDM	AMD	27- 12
AM9112CPC	AMD	27- 13
AM9112DDC	AMD	26-104
AM9112DPC	AMD	26-105
AM9112EDC	AMD	25- 94
AM9112EPC	AMD	25- 95
AM9114BDC	AMD	36- 85
AM9114BDM	AMD	36- 77
AM9114BPC	AMD	36- 86
AM9114CDC	AMD	36- 60
AM9114CDM	AMD	36- 61
AM9114CPC	AMD	36- 62
AM9114EDC	AMD	36- 40
AM9114EPC	AMD	36- 41
AM9124BDC	AMD	36- 87
AM9124BDM	AMD	36- 88
AM9124BPC	AMD	36- 89
AM9124CDC	AMD	36- 63
AM9124CDM	AMD	36- 64
AM9124CPC	AMD	36- 65
AM9124EDC	AMD	36- 42
AM9124EPC	AMD	36- 43
AM9130ADC	AMD	37- 38
AM9130ADM	AMD	37- 39
AM9130APC	AMD	37- 40
AM9130BDC	AMD	37- 28
AM9130BDM	AMD	37- 29
AM9130BPC	AMD	37- 30
AM9130CDC	AMD	37- 18
AM9130CDM	AMD	37- 19
AM9130CPC	AMD	37- 20
AM9130DDC	AMD	37- 10
AM9130DPC	AMD	37- 11
AM9130EDC	AMD	37- 1
AM9130EPC	AMD	37- 2
AM9131ADC	AMD	37- 41
AM9131ADM	AMD	37- 42
AM9131BDC	AMD	37- 31
AM9131BDM	AMD	37- 32
AM9131CDC	AMD	37- 21
AM9131CDM	AMD	37- 22
AM9131DDC	AMD	37- 12
AM9131EDC	AMD	37- 3
AM9140ADC	AMD	42-100
AM9140ADM	AMD	42-101
AM9140APC	AMD	42-102
AM9140BDC	AMD	42- 82
AM9140BDM	AMD	42- 83
AM9140BPC	AMD	42- 84
AM9140CDC	AMD	42- 69
AM9140CDM	AMD	42- 70
AM9140CPC	AMD	42- 71
AM9140DDC	AMD	42- 45
AM9140DPC	AMD	42- 46
AM9140EDC	AMD	42- 24
AM9140EPC	AMD	42- 25
AM9208BDC	AMD	54- 91
AM9208BDM	AMD	54- 92
AM9208CDC	AMD	54- 83
AM9214DC	AMD	51- 39
AM9214DM	AMD	51- 40
AM9216BDC	AMD	58- 2
AM9216BDM	AMD	58- 3
AM9216CDC	AMD	57-100
AM9217ADC	AMD	58- 17
AM9217ADM	AMD	58- 18
AM9217BDC	AMD	58- 4
AM9217BDM	AMD	58- 5
AM9232BCC	AMD	59- 88
AM9232BDC	AMD	59- 89
AM9232BDM	AMD	59- 90
AM9232BPC	AMD	59- 91
AM9232CCC	AMD	59- 77
AM9232CDC	AMD	59- 78
AM9232CPC	AMD	59- 79
AM9233BCC	AMD	59- 92
AM9233BDC	AMD	59- 93
AM9233BDM	AMD	59- 94
AM9233BPC	AMD	59- 95
AM9233CCC	AMD	59- 80
AM9233CDC	AMD	59- 81
AM9233CPC	AMD	59- 82
AM9244BDC	AMD	42- 94
AM9244BDM	AMD	42- 95
AM9244BPC	AMD	42- 96
AM9244CDC	AMD	42- 72
AM9244CDM	AMD	42- 73
AM9244CPC	AMD	42- 74
AM9244DDC	AMD	42- 47
AM9244DDM	AMD	42- 48
AM9244DPC	AMD	42- 49
AM9244EDC	AMD	42- 26
AM9244EPC	AMD	42- 27
AM9300DC	AMD	69- 68
AM9300DM	AMD	69- 69
AM9300FM	AMD	69- 70
AM9300PC	AMD	69- 71
AM9328DC	AMD	82-102
AM9328DM	AMD	83- 1
AM9328FM	AMD	83- 2
AM9328PC	AMD	83- 3
AM9338DC	AMD	77- 14
AM9338DM	AMD	77- 15
AM9338FM	AMD	77- 16
AM9338PC	AMD	77- 17
AM9401DC	AMD	86- 25
AM9401DM	AMD	86- 26
AM9401PC	AMD	86- 27
AM9404CDC	AMD	35- 56
AM9404CDM	AMD	35- 57
AM9404DDC	AMD	34- 63
AM9404DDM	AMD	34- 64
AM9404FDC	AMD	33- 93
AM9702A-1HDC	AMD	49- 50
AM9702A-2HDC	AMD	49- 54
AM9702AHDC	AMD	49- 58
AM9702AL-1HDC	AMD	49- 51
AM9702AL-2HDC	AMD	49- 55
AM29720DM	AMD	22- 69
AM29720FM	AMD	22- 70
AM29720PC	AMD	22- 71
AM29721DC	AMD	22- 72
AM29721DM	AMD	22- 73
AM29721FM	AMD	22- 74
AM29721PC	AMD	22- 75
AM31013	AMD	20- 50
AM35141DC	AMD	51- 41
AM35142DC	AMD	51- 42
AM270059E	AMD	23- 66
AM270059F	AMD	23- 67
AM270159E	AMD	23- 68
AM270159F	AMD	23- 69
AMU6B930051X	AMD	69- 72
AMU6B930059X	AMD	69- 73
AY3-4592	GIC	64- 99
AY5-2376	GIC	64- 93
AY5-3600	GIC	64- 95
AY5-3600-PRO	GIC	64- 97
B200	FMI	87- 40
B500	FMI	87- 41
C1101A1	AMD	24- 4
C1101A1DM	AMD	24- 5
C1101A51	AMD	24- 10
C1101A	AMD	24- 11
C1101ADM	AMD	24- 12
C2000	FMI	87- 42
C2101	AMD	26- 70
C2101-1	AMD	26- 57
C2101-2	AMD	26- 61
C2101A	ITL	26- 16
C2101A-2	ITL	25-105
C2101A-4	ITL	26- 38
C2102	AMD	32- 83
C2102-1	AMD	32- 37
C2102-2	AMD	32- 67
C2102A2	ITL	31- 31
C2102A4	ITL	32- 9
C2102A6	ITL	32- 68
C2102A	ITL	31- 73
C2109-3	ITL	43- 29
C2109-4	ITL	43- 31
C2111	AMD	26- 71
C2111-1	AMD	26- 58
C2111-2	AMD	26- 62
C2111A	ITL	26- 17
C2111A-2	ITL	25-106
C2111A-4	ITL	26- 39
C2112	AMD	26- 72
C2112-2	AMD	26- 63
C2112A	ITL	26- 18
C2112A-2	ITL	25-107
C2112A-4	ITL	26- 40
C2117-2	ITL	43- 70
C2117-3	ITL	43-107
C2117-4	ITL	44- 40
C2117-5	ITL	44-109
C2142	ITL	35- 68
C2142-2	ITL	34- 1
C2142-3	ITL	34- 97
C2142L	ITL	35- 69
C2142L-2	ITL	34- 2
C2142L-3	ITL	34- 98
C2401	AMD	86- 23
C2708#	AMD	56- 14
C3101	AMD	20- 66
C3101A	AMD	20- 26
C3101ADM	AMD	19- 97
C3324A4	ITL	51- 58
C3324A	ITL	51- 56
C3625A-1	ITL	53- 89
C5101L	ITL	25- 43
C5101L-1	ITL	25- 28
C5101L-3	ITL	25- 44
C8316A	AMD	58- 19
C31013	AMD	20- 67
CCD450ADC	FSC	87- 7
CCD450DC	FSC	87- 8
CD4006AD	RCA	75- 39
CD4006AE	RCA	75- 36
CD4006AF	RCA	75- 40
CD4006AH	RCA	75- 41
CD4006AY#	RCA	75- 42
CD4006BD	RCA	75- 52
CD4006BE	RCA	75- 53
CD4006BF	RCA	75- 54
CD4006BH	RCA	75- 55
CD4014AD	RCA	79- 83
CD4014AE	RCA	79- 74
CD4014AF	RCA	79- 84
CD4014AH	RCA	79- 85
CD4014AK	RCA	79- 86
CD4014AY	RCA	79- 75
CD4014BD	RCA	80- 33
CD4014BE	RCA	80- 34
CD4014BF	RCA	80- 35
CD4014BH	RCA	77- 72
CD4015AD	RCA	74- 3
CD4015AE	RCA	73- 96
CD4015AF	RCA	74- 4
CD4015AH	RCA	74- 5
CD4015AK	RCA	74- 6
CD4015AY	RCA	73- 97
CD4015BD	RCA	74- 24
CD4015BE	RCA	74- 25
CD4015BF	RCA	74- 26
CD4015BH	RCA	74- 27
CD4021AD	RCA	79- 87
CD4021AE	RCA	79- 76
CD4021AF	RCA	79- 88
CD4021AH	RCA	79- 89
CD4021AK	RCA	79- 90
CD4021AY	RCA	79- 77
CD4021BD	RCA	80- 36
CD4021BE	RCA	80- 37
CD4021BF	RCA	80- 38
CD4021BH	RCA	80- 39
CD4031AD	RCA	84- 34
CD4031AE	RCA	84- 30
CD4031AF	RCA	84- 35
CD4031AH	RCA	84- 36
CD4031AK	RCA	84- 37
CD4031AY	RCA	84- 31
CD4031BD	RCA	84- 51
CD4031BE	RCA	84- 52
CD4031BF	RCA	84- 53
CD4031BH	RCA	84- 54
CD4034AD	RCA	77- 29
CD4034AE	RCA	77- 30
CD4034AH	RCA	77- 31
CD4034AK#	RCA	77- 32
CD4034BD	RCA	77- 50
CD4034BE	RCA	77- 51
CD4034BF	RCA	77- 52
CD4034BH	RCA	77- 53
CD4035AD	RCA	66- 35
CD4035AE	RCA	66- 36
CD4035AF	RCA	66- 37
CD4035AH	RCA	66- 38
CD4035AK	RCA	66- 39
CD4035AY	RCA	66- 40
CD4035BD	RCA	67- 74
CD4035BE	RCA	67- 75
CD4035BF	RCA	67- 76
CD4035BH	RCA	67- 77
CD4036AD	RCA	18- 91
CD4039AD	RCA	18- 92
CD4039AK	RCA	18- 93
CD4061AD	RCA	23- 80
CD4062AH	RCA	85- 46
CD4062AK	RCA	85- 47
CD4062AT	RCA	85- 48
CD4076BD	RCA	66- 60
CD4076BE	RCA	66- 61
CD4076BF	RCA	66- 62
CD4076BH	RCA	66- 63
CD4094BD	RCA	81- 11
CD4094BE	RCA	81- 12
CD4094BF	RCA	81- 13
CD4094BH	RCA	81- 14
CD4094BK	RCA	81- 10
CD4517BD	RCA	84- 71
CD4517BE	RCA	84- 72
CD4517BF	RCA	84- 73
CD4517BH	RCA	84- 74
CD40061AD	RCA	23- 93
CD40061AE	RCA	23- 94
CD40061AH	RCA	23- 95
CD40061E	RCA	23- 96
CD40100BD	RCA	83-107
CD40100BE	RCA	83-108
CD40100BF	RCA	83-109
CD40100BH	RCA	83-110
CD40104BD#	RCA	65- 17
CD40104BE#	RCA	65- 18
CD40104BF#	RCA	65- 19
CD40104BH#	RCA	65- 26
CD40105BD	RCA	83- 87
CD40105BE	RCA	83- 88
CD40105BF	RCA	83- 89
CD40105BH	RCA	83- 81
CD40108BD	RCA	18- 72
CD40108BE	RCA	18- 73
CD40108BF	RCA	18- 79
CD40108BH	RCA	18- 74
CD40109BD	RCA	65- 1
CD40109BE	RCA	65- 2
CD40109BF	RCA	65- 3
CD40109BH	RCA	65- 4
CD40114BD	RCA	21- 4
CD40114BE	RCA	21- 5
CD40114BF	RCA	21- 6
CD40114BH	RCA	21- 7
CD40174BH	RCA	76- 2
CD40194BE#	RCA	65- 20
CD40194BF#	RCA	65- 21
CD40194BH#	RCA	65- 27
CD40208BD	RCA	18- 75
CD40208BE	RCA	18- 76
CD40208BF	RCA	18- 77
CD40208BH	RCA	18- 78
CDP18U42CD	RCA	49- 9
CDP1821CD	AMD	30- 21
	RCA	
CDP1821CE	RCA	30- 22
CDP1821D	RCA	30- 23
CDP1821E	RCA	30- 24
CDP1821SCD	RCA	30- 25
CDP1821SD	RCA	30- 26
CDP1822CD	RCA	25- 73
CDP1822CE	RCA	25- 74
CDP1822D	RCA	25- 59
CDP1822E	RCA	25- 60
CDP1823CD	RCA	22- 1
CDP1823CE	RCA	22- 2
CDP1823D	RCA	22- 3
CDP1823E	RCA	22- 4
CDP1824CD	RCA	21- 15
CDP1824CE	RCA	21- 13
CDP1824D	RCA	21- 16
CDP1824E	RCA	21- 14
CDP1825CD	RCA	33- 46
CDP1825CE	RCA	33- 47
CDP1825D	RCA	33- 48
CDP1825E	RCA	33- 49
CDP1831CD	RCA	51- 74
CDP1831CE	RCA	51- 75
CDP1831D	RCA	51- 76
CDP1831E	RCA	51- 77
CDP1832CD	RCA	51- 80
CDP1832CE	RCA	51- 81
CDP1832D	RCA	51- 82
CDP1832E	RCA	51- 83
CDP1833CD	RCA	54- 59
CDP1833CE	RCA	54- 60
CDP1833D	RCA	54- 61
CDP1833E	RCA	54- 62
CDP1834CD	RCA	54- 63
CDP1834CE	RCA	54- 64
CDP1834D	RCA	54- 65
CDP1834E	RCA	54- 66
CDP1842CD	RCA	49- 10
CG4103	SMC	62- 95
CM1600-2C	STX	57- 52
CM1600-2P	STX	57- 53
CM1600-3C	STX	57- 54
CM1600-3P	STX	57- 55
CM1600C	STX	57- 50
CM1600P	STX	57- 51
CM2102A4	ITL	32- 10
CM3200-2C	STX	59-108
CM3200-2D	STX	59-109
CM3200-2P	STX	59-110
CM3200-3C	STX	60- 2
CM3200-3D	STX	60- 3
CM3200-3P	STX	60- 4
CM3200-C	STX	59-104
CM3200-D	STX	59-105
CM3200-P	STX	59-106
CM4006AD	SOD	75- 35
CM4006AE	SOD	75- 34
CM4006AF	SOD	75- 43
CM4014AD	SOD	76- 94
CM4014AE	SOD	79- 65
CM4014AF	SOD	79- 91
CM4015AD	SOD	73- 92
CM4015AE	SOD	73- 89
CM4015AF	SOD	74- 7
CM4021AD	SOD	82- 15
CM4021AE	SOD	82- 14
CM4021AF	SOD	79- 92
CM4035AD	SOD	66- 20
CM4035AE	SOD	65- 97
CM4035AF	SOD	66- 21
CM4042AD	SOD	65- 80
CM4042AE	SOD	65- 81
CM6400-3C	STX	60- 51
CM6400-3P	STX	60- 52
CRT7004A	SMC	62- 97
CRT7004B	SMC	62- 98
CRT7004C	SMC	62- 99
D2101A	ITL	26- 19
D2101A-2	ITL	25-108
D2101A-4	ITL	26- 41
D2102A2	ITL	31- 32
D2102A4	ITL	32- 11
D2102A6	ITL	32- 69
D2102A	ITL	31- 74
D2104A	ITL	39- 51
D2104A-1	ITL	38- 63
D2104A-2	ITL	38- 91
D2104A-3	ITL	39- 13
D2104A-4	ITL	39- 41
D2107C	ITL	39- 14
D2107C-1	ITL	38- 64
D2107C-2	ITL	38- 92
D2107C-4	ITL	39- 42
D2111A	ITL	26- 20
D2111A-2	ITL	25-109
D2111A-4	ITL	26- 42
D2112A	ITL	26- 21
D2112A-2	ITL	25-110

Δ-Registered with JEDEC by this manufacturer

1. TYPE No. CROSS INDEX

IN TYPE NUMBER SEQUENCE

TYPE No.	MFRS	Pg&Line
D2112A-4	ITL	26- 43
D2114	INL	35- 70
	ITL	
D2114-2	INL	34- 3
	ITL	
D2114-3	INL	34- 99
	ITL	
D2114A4	ITL	34- 4
D2114A5	ITL	34- 65
D2114AL2	ITL	33- 81
D2114AL3	ITL	33- 94
D2114AL4	ITL	34- 5
D2114L2	INL	34- 6
	ITL	
D2114L3	INL	34-100
	ITL	
D2114L	INL	35- 71
	ITL	
D2115A	ITL	30- 96
D2115A-2	ITL	30-108
D2115AL	ITL	30- 97
D2115AL-2	ITL	30-109
D2115H2	ITL	30- 91
D2115H3	ITL	30- 93
D2115H4	ITL	30- 94
D2117-2	ITL	44- 82
D2117-3	ITL	44- 91
D2117-4	ITL	44-101
D2118-3	ITL	43- 50
D2118-4	ITL	43- 56
D2118-7	ITL	43- 71
D2125A	ITL	30- 98
D2125A-2	ITL	30-110
D2125AL	ITL	30- 99
D2125AL-2	ITL	31- 1
D2125H1	ITL	30- 90
D2125H2	ITL	30- 92
D2125H3	ITL	31- 51
D2125H4	ITL	30- 95
D2141-2	ITL	43- 5
D2141-3	ITL	43- 8
D2141-4	ITL	43- 12
D2141-5	ITL	43- 16
D2141L-3	ITL	43- 9
D2141L-4	ITL	43- 13
D2141L-5	ITL	43- 17
D2142	ITL	35- 72
D2142-2	ITL	34- 7
D2142-3	ITL	34-101
D2142L3	ITL	34-102
D2142L	ITL	32- 97
D2147	ITL	42-110
D2147-3	ITL	42-107
D2147H1	ITL	40- 50
D2147H2	ITL	40- 51
D2147H3	ITL	40- 52
D2147H	ITL	40- 64
D2147HL	ITL	40- 65
D2147L	ITL	43- 1
D2148H3	ITL	33- 65
D2148H	ITL	33- 72
D2148HL3	ITL	33- 66
D2148HL	ITL	33- 73
D2149H2	ITL	33- 63
D2149H3	ITL	33- 67
D2149H	ITL	33- 74
D2149HL3	ITL	33- 68
D2149HL	ITL	33- 75
D2708	ITL	56- 15
D2708-1	ITL	56- 7
D2708-6	ITL	56- 41
D2708L	ITL	56- 16
D2716	ITL	58- 45
D2716-1	ITL	59- 33
D2716-2	ITL	59- 34
D2716-5	ITL	59- 35
D2716-6	ITL	59- 36
D2732	ITL	60- 9
D2732-6	ITL	60- 12
D2732A	ITL	60- 8
D2758	ITL	54-110
D2764	ITL	60- 14
D3101	ITL	20- 68
D3101A	ITL	20- 27
D3242	ITL	88- 9
D3301A	ITL	47- 68
D3302A4	ITL	49-103
D3302A	ITL	49-101
D3304A4	ITL	51- 8
D3304A6	ITL	51- 9
D3304A	ITL	51- 7
D3322A4	ITL	49-104
D3322A	ITL	49-102
D3324A4	ITL	51- 59
D3324A	ITL	51- 57
D3628	ITL	55- 53
D3628-4	ITL	55- 70
D3628A	ITL	55- 35
D3628A-1	ITL	55- 28
D3636	ITL	58- 72
D3636-1	ITL	58- 62
DL9-1402A26#1	GIC	85- 67
DM54S188J	NSC	46- 55
DM54S287J	NSC	48- 31
DM54S288J	NSC	46- 54
DM54S387J	NSC	48- 32
DM54S472J	NSC	52- 47
DM54S473J	NSC	52- 48
DM54S474J	NSC	52- 49
DM54S475J	NSC	52- 50
DM54S570J	NSC	50- 44
DM54S571J	NSC	50- 45
DM54S572J	NSC	53- 71
DM54S573J	NSC	53- 72
DM74S188J	NSC	46- 48
DM74S188N	NSC	46- 49
DM74S287J	NSC	48- 13
DM74S287N	NSC	48- 14
DM74S288J	NSC	46- 50
DM74S288N	NSC	46- 51
DM74S387J	NSC	48- 15
DM74S387N	NSC	48- 16
DM74S472J	NSC	52- 16
DM74S472N	NSC	52- 17
DM74S473J	NSC	52- 18
DM74S473N	NSC	52- 19
DM74S474J	NSC	52- 24
DM74S474N	NSC	52- 25
DM74S475J	NSC	52- 26
DM74S475N	NSC	52- 27
DM74S570J	NSC	50- 27
DM74S570N	NSC	50- 28
DM74S571J	NSC	50- 29
DM74S571N	NSC	50- 30
DM74S572J	NSC	53- 54
DM74S572N	NSC	53- 55
DM74S573J	NSC	53- 56
DM74S573N	NSC	53- 57
DM76S64J	NSC	62- 51
DM76S128J	NSC	62- 62
DM77S180J	NSC	55- 40
DM77S181J	NSC	55- 41
DM77S184J	NSC	57- 9
DM77S185J	NSC	57- 10
DM77S188J	NSC	46- 46
DM77S190J	NSC	58- 85
DM77S191J	NSC	58- 86
DM77S288J	NSC	46- 47
DM85S68D	NSC	20- 45
DM85S68N	NSC	20- 46
DM86S64J	NSC	62- 52
DM86S64N	NSC	62- 53
DM86S128J	NSC	62- 63
DM86S128N	NSC	62- 64
DM87S180J	NSC	55- 42
DM87S180N	NSC	55- 43
DM87S181J	NSC	55- 44
DM87S181N	NSC	55- 45
DM87S184J	NSC	57- 1
DM87S184N	NSC	57- 2
DM87S185J	NSC	57- 3
DM87S185N	NSC	57- 4
DM87S188J	NSC	46- 42
DM87S188N	NSC	46- 43
DM87S190J	NSC	58- 73
DM87S190N	NSC	58- 74
DM87S191J	NSC	58- 75
DM87S191N	NSC	58- 76
DM87S288J	NSC	46- 44
DM87S288N	NSC	46- 45
DM8678J	NSC	62- 54
DM8678N	NSC	62- 55
DM10414J	NSC	22- 48
DM10414N	NSC	22- 49
DM10415AJ	NSC	28- 12
DM10415AN	NSC	28- 13
DM10415J	NSC	28- 25
DM10415N	NSC	28- 26
EA2114L-15PC	EAI	33- 95
EA2114L-20PC	EAI	34- 8
EA2114L-25PC	EAI	34- 66
EA2114L-30PC	EAI	34-103
EA2114LPC	EAI	35- 73
EA2308AC	EAI	54- 74
EA2308AL	EAI	54-106
EA2308AP	EAI	54- 75
EA2316ADC	EAI	58- 34
EA2316ADM	EAI	58- 35
EA2704DC	EAI	52- 96
EA2704DL	EAI	52- 98
EA2704DM	EAI	52- 99
EA2708DC	EAI	56- 17
EA2708DL	EAI	56- 39
EA2708DM	EAI	56- 42
EA2716	EAI	57- 58
EA4700DC	EAI	54- 72
EA4700DL	EAI	54-107
EA4700PC	EAI	54- 73
EA8308AC	EAI	54- 76
EA8308AL	EAI	54-108
EA8308AP	EAI	54- 77
EA8316ADC	EAI	58- 36
EA8316ADM	EAI	58- 37
EA8316EDC	EAI	58- 26
EA8316EDL	EAI	58- 31
EA8332A1DC	EAI	59- 40
EA8332A1PC	EAI	59- 41
EA8332ADC	EAI	59- 43
EA8332APC	EAI	59- 44
EA8332B1DC	EAI	59- 42
EA8332BDC	EAI	59- 45
EA8332BPC	EAI	59- 46
EF68A10C	THCF	22- 16
EF68A10CP	THCF	22- 17
EF68A10CV	THCF	22- 18
EF68A10P	THCF	22- 19
EF68B10C	THCF	22- 12
EF68B10P	THCF	22- 13
EF4116BC-15	THCF	44- 83
EF4116BC-25	THCF	44-102
EF4116BC-30	THCF	44-110
EF4116BJ-15	THCF	44- 84
EF4116BJ-20	THCF	44- 92
EF4116BJ-30	THCF	45- 1
EF6810C	THCF	22- 26
EF6810CMB	THCF	22- 27
EF6810CP	THCF	22- 28
EF6810CV	THCF	22- 29
EF6810P	THCF	22- 30
ER1400	GIC	47- 32
ER2050	GIC	46-106
ER2051	GIC	46-108
ER2051HR	GIC	46-109
ER2055	GIC	47- 27
ER3400	GIC	53- 97
F16K2DC	FSC	43- 72
F16K3DC	FSC	43-108
F16K4DC	FSC	44- 41
F16K5DC	FSC	44- 75
F2114-2DC	FSC	34- 9
F2114-2PC	FSC	34- 10
F2114-3DC	FSC	34-104
F2114-3PC	FSC	34-105
F2114DC	FSC	35- 74
F2114L2DC	FSC	34- 11
F2114L2PC	FSC	34- 12
F2114L3DC	FSC	34-106
F2114L3PC	FSC	34-107
F2114LDC	FSC	35- 75
F2114LPC	FSC	35- 76
F2114PC	FSC	35- 77
F2708-1DC	FSC	56- 8
F2708DC	FSC	56- 18
F2708DL	FSC	56- 19
F2708DM	FSC	56- 20
F10000DC	FSC	73- 19
F10000DM	FSC	73- 20
F10000FC	FSC	73- 21
F10000FM	FSC	73- 22
F10000PC	FSC	73- 23
F10141DC	FSC	73- 27
F10141FC	FSC	73- 28
F10145ADC	FSC	19- 53
F10145AFC	FSC	19- 54
F10145APC	FSC	19- 55
F10176DC	FSC	75- 74
F10176FC	FSC	75- 75
F10176PC	FSC	75- 76
F10186DC	FSC	75- 77
F10186FC	FSC	75- 78
F10186PC	FSC	75- 79
F10405DC	FSC	21-102
F10405FC	FSC	21-103
F10410DC	FSC	22- 58
F10410FC	FSC	22- 59
F10410PC	FSC	22- 60
F10411DC	FSC	22- 62
F10411FC	FSC	22- 63
F10411PC	FSC	22- 64
F10414DC	FSC	22- 43
F10414FC	FSC	22- 44
F10415ADC	FSC	28- 14
F10415AFC	FSC	28- 15
F10415DC	FSC	28- 27
F10415FC	FSC	28- 28
F10416DC	FSC	47-101
F10416FC	FSC	47-102
F10422DC	FSC	24- 24
F10422FC	FSC	24- 25
F10470DC	FSC	39- 92
F10541DM	FSC	73- 29
F10541FM	FSC	73- 30
F10545ADM	FSC	19- 56
F10545AFM	FSC	19- 57
F10576DM	FSC	75- 80
F10576FM	FSC	75- 81
F10586DM	FSC	75- 82
F10586FM	FSC	75- 83
F95000DC	FSC	73- 24
F100141DC	FSC	79- 44
F100141FC	FSC	79- 45
F100142DC	FSC	87- 2
F100142FC	FSC	87- 3
F100145DC	FSC	19- 49
F100145FC	FSC	19- 50
F100151DC	FSC	76- 87
F100151FC	FSC	76- 88
F100414DC	FSC	22- 45
F100414FC	FSC	22- 46
F100415DC	FSC	28- 16
F100415FC	FSC	28- 17
F100416DC	FSC	47-103
F100416FC	FSC	47-104
F100422DC	FSC	24- 26
F100422FC	FSC	24- 27
F100470DC	FSC	39- 93
F100470FC	FSC	39- 94
FBM31DB	FCA	87- 16
FBM43DA	FCA	87- 15
FDR116Z1	PHIN	62- 6
FDR116Z2	PHIN	62- 7
FDR116Z	MULB	51- 5
	PHIN	
FDR126Z1#1	PHIN	64- 26
FDR126Z1#2	PHIN	64- 67
FDR126Z	PHIN	49- 66
FDR131Z1#1	PHIN	64- 14
FDR131Z1#2	PHIN	64- 59
FDR131Z2	PHIN	62- 5
FDR131Z#1	PHIN	51- 14
FDR131Z#2	PHIN	53- 10
FDR146BZ1	PHIN	62- 34
	SIC	
FDR146BZ2	PHIN	62- 57
	SIC	
FDR146BZ	PHIN	52-106
	SIC	
FDR146Z1	PHIN	62- 35
	SIC	
FDR146Z2	PHIN	62- 58
	SIC	
FDR146Z	PHIN	52-107
	SIC	
FDR151BZ	PHIN	58- 39
	SIC	
FDR151Z	PHIN	58- 40
	SIC	
FJJ181-7475	MULB	65- 53
	PHIN	
FLH561-74184	SIEG	64- 68
FLH565-84184	SIEG	64- 69
FLH571-74185A		64- 74
	SIEG	
FLH575-84185A		64- 75
	SIEG	
FLJ151-7475	SIEG	65- 54
FLJ155-8475	SIEG	65- 55
FLJ161-7490	SIEG	67- 60
FLJ165-8490	SIEG	67- 61
FLJ191-7495A	SIEG	69- 74
FLJ195-8495A	SIEG	69- 75
FLJ221-7491A	SIEG	82- 34
FLJ225-8491A	SIEG	82- 35
FLJ231-7494	SIEG	66- 78
FLJ235-8494	SIEG	66- 79
FLJ261-7496	SIEG	74- 71
FLJ265-8496	SIEG	74- 72
FLJ311-74198	SIEG	77-104
FLJ315-84198	SIEG	77-105
FLJ321-74199	SIEG	77-106
FLJ325-84199	SIEG	77-107
FLJ361-74118	SIEG	75- 88
FLJ365-84118	SIEG	75- 89
FLJ371-74119	SIEG	75- 90
FLJ375-84119	SIEG	75- 91
FLJ441-74164	SIEG	81- 75
FLJ445-84164	SIEG	81- 76
FLJ451-74165	SIEG	80- 77
FLJ455-84165	SIEG	80- 78
FLJ461-74166	SIEG	77-108
FLJ465-84166	SIEG	77-109
FLJ481-4932	SIEG	82- 79
FLJ485-49832	SIEG	82- 80
FLJ491-49702	SIEG	67- 7
FLJ495-49802	SIEG	67- 8
FLJ531-74174	SIEG	75- 92
FLJ535-84174	SIEG	75- 93
FLJ541-74175	SIEG	65- 56
FLJ545-84175	SIEG	65- 57
FLJ551-74194	SIEG	69- 76
FLJ555-84194	SIEG	69- 77
FLJ561-74195	SIEG	71- 51
FLJ565-84195	SIEG	71- 52
FLQ101-7489	SIEG	20- 94
FLQ105-8489	SIEG	20- 95
FLQ111-7481A	SIEG	18-108
FLQ115-8481A	SIEG	18-109
FLQ121-7484A	SIEG	18-110
FLQ125-8484A	SIEG	19- 1
FLQ131-74170	SIEG	18- 65
FLQ135-84170	SIEG	18- 66
FR1502E01	WDC	84- 14
FR1502E1C	WDC	83- 11
FR1502E02	WDC	84- 13
FR1502E2C	WDC	83- 9
FR1502E3C	WDC	83- 15
FR1502E	WDC	84- 16
FR1502EC	WDC	83- 13
FR1502F1C	WDC	83- 12
FR1502F2C	WDC	83- 10
FR1502F3C	WDC	83- 16
FR1502FC	WDC	83- 14
FZJ161	SIEG	65- 99
	VALG	
FZJ165	SIEG	65-100
GBX10422AD	PHIN	24- 22
GFB7496D	MULB	75- 10
GXB10139	MULB	46- 41
	RTCF	
GXB10140	MULB	21- 34
	RTCF	
GXB10141	MULB	73- 25
GXB10142	MULB	21- 25
	RTCF	
GXB10144	MULB	22- 61
	RTCF	
GXB10145	MULB	19- 60
	RTCF	
GXB10147A	SIEG	21-101
GXB10148	MULB	21- 35
	RTCF	
GXB10149	MULB	47-106
PHIN	RTCF	
	SIEG	
GXB10155	MULB	87- 6
	RTCF	
GXB10415	MULB	28- 33
	RTCF	
GXB10415A	MULB	28- 24
	RTCF	
GXB10422AF	RTCF	24- 34
GXB10422AN	RTCF	24- 35
GXB10422F	RTCF	24- 40
GXB10422N	RTCF	24- 41
GXB100415	RTCF	28- 10
GXB100422AF	RTCF	24- 28
GXB100422AN	RTCF	24- 29
GXB100422F	RTCF	24- 36
GXB100422N	RTCF	24- 37
GXB100473	SIEG	21- 46
GYQ101	PHIN	28- 5
	SIC	
GZF1100D	MULB	81- 20
	VALG	
GZF1100P	MULB	81- 35
PHIN	SIC	
	VALG	
GZF1106D	MULB	84- 85
	VALG	
GZF1106P	MULB	84- 91
PHIN	SIC	
GZF1400D	MULB	23- 84
GZF1400P	MULB	23-104
PHIN	SIC	
H160D1	SGAI	73- 59
HAB1500	MULB	27-107
PHIN	SIC	
HAB1501	MULB	27-108
PHIN	SIC	
HAB1502	MULB	27-109
PHIN	SIC	
HBC4006AD	SGAI	75- 44
HBC4006AF	SGAI	75- 45
HBC4006AK	SGAI	75- 46
HBC4014AD	SGAI	79- 93
HBC4014AF	SGAI	79- 94
HBC4014AK	SGAI	79- 95
HBC4015AD	SGAI	74- 8
HBC4015AF	SGAI	74- 9
HBC4015AK	SGAI	74- 10
HBC4021AD	SGAI	79- 96
HBC4021AF	SGAI	79- 97
HBC4021AK	SGAI	79- 98
HBC4031AD	SGAI	84- 38
HBC4031AF	SGAI	84- 39
HBC4031AK	SGAI	84- 40
HBC4034AD	SGAI	80- 1
HBC4034AK	SGAI	80- 2
HBC4035AD	SGAI	66- 22
HBC4035AF	SGAI	66- 23
HBC4035AK	SGAI	66- 24
HBC4036AD	SGAI	18- 84
HBC4036AK	SGAI	18- 94
HBC4039AD	SGAI	18- 85
HBC4039AK	SGAI	18- 86
HBC4042AD	SGAI	65- 82
HBC4042AF	SGAI	65- 83
HBC4042AK	SGAI	65- 84
HBC4062AK	SGAI	85- 49
HBF4006AE	SGAI	75- 37
HBF4006AF	SGAI	75- 38
HBF4014AE	SGAI	79- 78
HBF4014AF	SGAI	79- 79
HBF4015AE	SGAI	73- 98
HBF4015AF	SGAI	73- 99
HBF4021AE	SGAI	79- 80
HBF4021AF	SGAI	79- 81
HBF4031AE	SGAI	84- 32
HBF4031AF	SGAI	84- 33
HBF4034AD	SGAI	77- 33
HBF4034AE	SGAI	77- 34
HBF4035AE	SGAI	65-102
HBF4035AF	SGAI	65-103
HBF4036AD	SGAI	18- 87
HBF4036AE	SGAI	18- 88
HBF4039AD	SGAI	18- 89
HBF4039AE	SGAI	18- 90
HBF4042AE	SGAI	65- 85
HBF4042AF	SGAI	65- 86
HBF4062AE	SGAI	85- 50
HCC4006BD	SGAI	75- 56
HCC4006BF	SGAI	75- 57
HCC4006BK	SGAI	75- 58
HCC4014BD	SGAI	80- 40
HCC4014BF	SGAI	80- 41
HCC4014BK	SGAI	80- 42
HCC4015BD	SGAI	74- 28
HCC4015BF	SGAI	74- 29
HCC4015BK	SGAI	74- 30
HCC4021BD	SGAI	79- 48
HCC4021BF	SGAI	79- 49
HCC4021BK	SGAI	79- 50
HCC4031BD	SGAI	84- 55
HCC4031BF	SGAI	84- 56
HCC4031BK	SGAI	84- 57
HCC4034BD	SGAI	77- 20
HCC4035BD	SGAI	67- 78
HCC4035BF	SGAI	67- 79
HCC4035BK	SGAI	67- 80
HCC4076BD	SGAI	66- 64
HCC4076BF	SGAI	66- 65
HCC4076BK	SGAI	66- 66
HCC4094BD	SGAI	81- 15
HCC4094BF	SGAI	81- 16
HCC4094BK	SGAI	81- 17
HCC40100BD	SGAI	65- 9
HCC40100BF	SGAI	65- 10
HCC40100BK	SGAI	65- 11
HCC40105BD	SGAI	83- 82
HCC40105BF	SGAI	83- 83
HCC40105BK	SGAI	83- 84
HCF4006BE	SGAI	75- 59
HCF4006BF	SGAI	75- 60
HCF4014BE	SGAI	80- 43
HCF4014BF	SGAI	80- 44
HCF4015BE	SGAI	74- 31
HCF4015BF	SGAI	74- 32
HCF4021BE	SGAI	79- 51
HCF4021BF	SGAI	79- 52

Δ-Registered with JEDEC by this manufacturer

1. TYPE No. CROSS INDEX

IN TYPE NUMBER SEQUENCE

TYPE No.	MFRS	Pg&Line
HCF4031BE	SGAI	84 - 58
HCF4031BF	SGAI	84 - 59
HCF4034BD	SGAI	77 - 21
HCF4034BE	SGAI	77 - 22
HCF4035BE	SGAI	67 - 81
HCF4035BF	SGAI	67 - 82
HCF4076BE	SGAI	66 - 67
HCF4076BF	SGAI	66 - 68
HCF4094BE	SGAI	81 - 18
HCF4094BF	SGAI	81 - 19
HCF40100BE	SGAI	65 - 12
HCF40100BF	SGAI	65 - 13
HCF40105BE	SGAI	83 - 85
HCF40105BF	SGAI	83 - 86
HCMP1822CD	HAC	25 - 29
HCMP1822CD#	HAC	25 - 12
HCMP1822CP	HAC	25 - 13
HCMP1824CD	HAC	21 - 17
HCMP1824CP	HAC	21 - 18
HCMP1824D	HAC	21 - 19
HCMP1824P	HAC	21 - 20
HCMP1831CD	HAC	51 - 72
HCMP1831CP	HAC	51 - 86
HCMP1831D	HAC	51 - 70
HCMP1831D#	HAC	51 - 78
HCMP1831P	HAC	51 - 79
HCMP1832CD	HAC	51 - 73
HCMP1832CP	HAC	51 - 87
HCMP1832D	HAC	51 - 71
HCMP1832D#	HAC	51 - 84
HCMP1832P	HAC	51 - 85
HCMP1833CD	HAC	54 - 57
HCMP1833D	HAC	54 - 55
HCMP1833D#	HAC	54 - 67
HCMP1833P	HAC	54 - 68
HCMP1834CD	HAC	54 - 58
HCMP1834CP	HAC	54 - 70
HCMP1834D	HAC	54 - 56
HCMP1834D#	HAC	54 - 69
HCMP1834P	HAC	54 - 71
HCMP1835CD	HAC	57 - 94
HCMP1835CP	HAC	57 - 95
HCMP1835D	HAC	57 - 98
HCMP1835D#	HAC	57 - 90
HCMP1835P	HAC	57 - 91
HCMP1836CD	HAC	57 - 96
HCMP1836CP	HAC	57 - 97
HCMP1836D	HAC	57 - 92
HCMP1836P	HAC	57 - 93
HD21S145	HITJ	84 - 20
HD74LS91	HITJ	82 - 65
HD74LS91P	HITJ	82 - 66
HD74LS95B	HITJ	65 - 22
HD74LS95BP	HITJ	65 - 23
HD74LS164	HITJ	81 - 64
HD74LS164P	HITJ	81 - 65
HD74LS166	HITJ	82 - 63
HD74LS166P	HITJ	82 - 64
HD74LS194A	HITJ	65 - 24
HD74LS194AP	HITJ	65 - 25
HD74LS195A	HITJ	70 - 95
HD74LS195AP	HITJ	70 - 96
HD74LS295B	HITJ	68 - 30
HD74LS295BP	HITJ	68 - 31
HD74LS299	HITJ	76 -100
HD74LS299P	HITJ	76 -101
HD10145	HITJ	84 - 21
HD10147	HITJ	21 - 98
HD10148	HITJ	19 - 59
HD14006B	HITJ	83 - 93
HD14014B	HITJ	77 - 18
HD14015B	HITJ	74 - 11
HD14021B	HITJ	77 - 19
HD14034B	HITJ	76 - 99
HD14035B	HITJ	66 - 25
HD14194B	HITJ	66 - 45
HD14505B	HITJ	21 - 42
HD14517B	HITJ	84 - 67
HD14524B	HITJ	47 - 58
HD14537B	HITJ	23 -107
HD14552B	HITJ	21 - 54
HD14557B	HITJ	84 - 41
HD14562B	HITJ	85 - 19
HD14580B	HITJ	18 - 81
HD46846	HITJ	88 - 43
HD46846P	HITJ	88 - 44
HD100141	HITJ	80 -100
HD100141F	HITJ	80 -101
HD100145	HITJ	83 - 79
HD100145F	HITJ	83 - 80
HEF4006B	VALG	75 - 51
HEF4006BD	MULB	75 - 66
	PHIN	
HEF4006BP	MULB	75 - 67
	PHIN	
HEF4006BT	PHIN	75 - 68
HEF4006P	PHIN	75 - 69
SIC	VALG	
HEF4014B	VALG	79 - 46
HEF4014BD	MULB	80 - 45
	PHIN	
HEF4014BP	MULB	80 - 46
	PHIN	
HEF4014BT	PHIN	80 - 47
HEF4014P	VALG	80 - 32
HEF4015B	VALG	73 - 79
HEF4015BD	MULB	74 - 33
	PHIN	
HEF4015BP	MULB	74 - 34
	PHIN	
HEF4015BT	PHIN	74 - 35
HEF4015P	VALG	74 - 23
HEF4021B	VALG	79 - 47

TYPE No.	MFRS	Pg&Line
HEF4021BD	MULB	80 - 53
	PHIN	
HEF4021BP	MULB	80 - 54
	PHIN	
HEF4021BT	PHIN	80 - 55
HEF4021P	VALG	80 - 56
HEF4031B	VALG	84 - 27
HEF4031BD	MULB	84 - 60
	PHIN	
HEF4031BP	MULB	84 - 61
	PHIN	
HEF4031BT	PHIN	84 - 62
HEF4031P	VALG	84 - 45
HEF4035B	VALG	65 - 87
HEF4035BD	MULB	68 - 15
	PHIN	
HEF4035BP	MULB	68 - 16
	PHIN	
HEF4035BT	PHIN	68 - 17
HEF4035P	VALG	66 -100
HEF4076B	VALG	66 -101
HEF4076BD	MULB	67 - 83
	PHIN	
HEF4076BP	MULB	67 - 84
	PHIN	
HEF4076BT	PHIN	67 - 85
HEF4076P	VALG	65 - 88
HEF4094BD	MULB	81 - 22
	PHIN	
HEF4094BP	MULB	81 - 23
	PHIN	
HEF4094BT	PHIN	81 - 24
HEF4505BD	MULB	21 - 40
PHIN	RTCF	
HEF4505BP	MULB	21 - 41
PHIN	RTCF	
HEF4517BD	MULB	84 - 75
	PHIN	
HEF4517BP	MULB	84 - 76
	PHIN	
HEF4557BD	MULB	84 - 63
	PHIN	
HEF4557BP	MULB	84 - 64
	PHIN	
HEF4557BT	PHIN	84 - 65
HEF4720	RTCF	24 - 1
HEF4720B	VALG	23 - 87
HEF4720BD	MULB	23 - 97
PHIN	RTCF	
HEF4720BP	MULB	23 - 98
PHIN	RTCF	
HEF4720P	VALG	23 -108
HEF4720VD	MULB	23 -105
PHIN	RTCF	
HEF4720VP	MULB	23 -106
PHIN	RTCF	
HEF4721B	VALG	25 - 57
HEF4721P	VALG	25 - 58
HEF4731BD	MULB	84 - 94
	PHIN	
HEF4731BP	MULB	84 - 95
	PHIN	
HEF4731VD	MULB	84 - 96
	PHIN	
HEF4731VP	MULB	84 - 97
	PHIN	
HEF4736B	VALG	30 - 27
HEF4736P	VALG	30 - 28
HEF40174B	VALG	76 - 8
HEF40174BD	PHIN	76 - 9
HEF40174BP	PHIN	76 - 10
HEF40174P	VALG	75 - 94
HEF40175B	VALG	67 - 86
HEF40175BD	PHIN	68 - 64
HEF40175BP	PHIN	68 - 65
HEF40175P	VALG	65 - 89
HEF40194B	VALG	65 - 90
HEF40194BD	MULB	68 - 66
	PHIN	
HEF40194BP	MULB	68 - 67
	PHIN	
HEF40194BT	PHIN	68 - 68
HEF40194P	VALG	67 - 5
HEF40195B	VALG	65 - 91
HEF40195BD	MULB	68 - 23
	PHIN	
HEF40195BP	MULB	68 - 24
	PHIN	
HEF40195BT	PHIN	68 - 25
HEF40195P	VALG	67 - 6
HEPC3802P-RT	MOTA	63 - 43
HM1-6611A-9	HAS	46 - 1
HM1-7640AR2	HAS	52 - 41
HM1-7680RP5	HAS	55 - 36
HM1-76160-2	HAS	58 - 77
HM1-76160-5	HAS	58 - 61
HM3-7640AR5	HAS	52 - 2
HM3-7641AR5	HAS	52 - 3
HM3-7680RP2	HAS	55 - 54
HM3-7681RP5	HAS	55 - 37
HM9-7641AR2	HAS	52 - 42
HM9-7641AR5	HAS	52 - 4
HM9-76160-2	HAS	58 - 78
HM468A10	HITJ	22 - 20
HM468A10P	HITJ	22 - 21
HM2105	HITJ	22 - 65
HM2106	HITJ	22 - 50
HM2110	HITJ	28 - 29
HM2110-1	HITJ	28 - 21
HM2110-2	HITJ	28 - 18
HM2112	HITJ	28 - 8
HM2112-1	HITJ	28 - 9
HM2112A	HITJ	30 - 88
HM2112B	HITJ	30 - 89

TYPE No.	MFRS	Pg&Line
HM2504	HITJ	23 - 54
HM2504-1	HITJ	23 - 44
HM2510	HITJ	29 - 14
HM2510-1	HITJ	28 - 95
HM2510-2	HITJ	28 - 87
HM2511	HITJ	29 - 15
HM2511-1	HITJ	28 - 96
HM4315P	HITJ	41 - 84
HM4334P-3	HITJ	34 -108
HM4334P-4	HITJ	35 - 78
HM4716A-1	HITJ	43 - 57
HM4716A-2	HITJ	43 - 73
HM4716A-3	HITJ	43 -109
HM4716A-4	HITJ	44 - 42
HM4716AP-1	HITJ	43 - 58
HM4716AP-2	HITJ	43 - 74
HM4716AP-3	HITJ	43 -110
HM4716AP-4	HITJ	44 - 43
HM4816	HITJ	43 - 51
HM4864-2	HITJ	45 - 35
HM4864-3	HITJ	45 - 43
HM6116LP-2	HITJ	38 - 2
HM6116LP-3	HITJ	38 - 6
HM6116LP-4	HITJ	38 - 10
HM6116P-2	HITJ	38 - 3
HM6116P-3	HITJ	38 - 7
HM6116P-4	HITJ	38 - 11
HM6147-3	HITJ	40 - 45
HM6147LP	HITJ	40 - 53
HM6147LP-3	HITJ	40 - 66
HM6147P	HITJ	40 - 54
HM6147P-3	HITJ	40 - 67
HM6148LP	HITJ	33 - 52
HM6148LP-3	HITJ	33 - 1
HM6148LP-6	HITJ	33 - 53
HM6148P	HITJ	33 - 3
HM6148P-3	HITJ	33 - 2
HM6148P-6	HITJ	33 - 54
HM6322-2	HAS	56 - 75
HM6322-9	HAS	56 - 76
HM6322A2	HAS	56 - 72
HM6322A9	HAS	56 - 73
HM6322C9	HAS	56 - 74
HM6501-2	HAS	24 - 71
HM6501-5	HAS	24 - 72
HM6501-9	HAS	24 - 73
HM6501B2	HAS	24 - 74
HM6501B9	HAS	24 - 75
HM6503-5	HAS	37 - 93
HM6503-9	HAS	37 - 94
HM6504-2	HAS	40 - 6
HM6504-5	HAS	40 - 7
HM6504-9	HAS	40 - 8
HM6504B2	HAS	40 - 9
HM6504B9	HAS	40 - 10
HM6505-2	HAS	40 - 11
HM6505-5	HAS	40 - 12
HM6505-9	HAS	40 - 13
HM6508-2	HAS	29 - 31
HM6508-5	HAS	29 - 32
HM6508-9	HAS	29 - 33
HM6511-2	HAS	21 - 70
HM6511-9	HAS	21 - 71
HM6511C9	HAS	21 - 72
HM6512-2	HAS	21 - 73
HM6512-9	HAS	21 - 74
HM6512C9	HAS	21 - 75
HM6513-5	HAS	27 - 87
HM6513-9	HAS	27 - 88
HM6514-2	HAS	32 -103
HM6514-5	HAS	32 -104
HM6514-9	HAS	32 -105
HM6514B2	HAS	32 -106
HM6514B9	HAS	32 -107
HM6518-2	HAS	29 - 34
HM6518-5	HAS	29 - 35
HM6518-9	HAS	29 - 36
HM6518B2	HAS	29 - 37
HM6518B9	HAS	29 - 38
HM6533-2	HAS	32 -108
HM6533-9	HAS	32 -109
HM6533C9	HAS	32 -110
HM6543-2	HAS	40 - 14
HM6543-9	HAS	40 - 15
HM6543C9	HAS	40 - 16
HM6551-2	HAS	24 - 76
HM6551-5	HAS	24 - 77
HM6551-9	HAS	24 - 78
HM6551B2	HAS	24 - 79
HM6551B9	HAS	24 - 80
HM6561-2	HAS	24 - 81
HM6561-5	HAS	24 - 82
HM6561-9	HAS	24 - 83
HM6561B2	HAS	24 - 84
HM6561B9	HAS	24 - 85
HM6562-2	HAS	24 - 86
HM6562-5	HAS	24 - 87
HM6562-9	HAS	24 - 88
HM6562B2	HAS	24 - 89
HM6562B9	HAS	24 - 90
HM6564-2	HAS	43 - 33
HM6564-5	HAS	43 - 34
HM6564-9	HAS	43 - 35
HM6611-2	HAS	48 - 92
HM6611-5	HAS	49 - 1
HM6611-9	HAS	48 - 93
HM6611A2	HAS	48 - 88
HM6611A9	HAS	48 - 89
HM6641-2	HAS	52 - 85
HM6641-5	HAS	52 - 86
HM6641-9	HAS	52 - 87
HM6661-2	HAS	48 - 90
HM6661-5	HAS	48 - 94
HM6661-9	HAS	48 - 91

TYPE No.	MFRS	Pg&Line
HM6661A2	HAS	48 - 86
HM6661A9	HAS	48 - 87
HM10414	HITJ	22 - 47
HM10414-1	HITJ	22 - 42
HM10422	HITJ	24 - 30
HM10470	HITJ	39 - 91
HM10470-1	HITJ	39 - 90
HM46810	HITJ	22 - 31
HM46810P	HITJ	22 - 32
HM100422	HITJ	24 - 31
HM100422F	HITJ	24 - 23
HM472114-3	HITJ	34 -109
HM472114-4	HITJ	35 - 79
HM472114A-1	HITJ	33 - 96
HM472114A-2	HITJ	37 - 4
HM472114AP-1	HITJ	33 - 97
HM472114AP-2	HITJ	37 - 5
HM472114P-3	HITJ	34 -110
HM472114P-4	HITJ	35 - 80
HN25044	HITJ	53 - 85
HN25045	HITJ	53 - 86
HN25084	HITJ	57 - 5
HN25085	HITJ	57 - 6
HN25088	HITJ	55 - 38
HN25089	HITJ	55 - 39
HN46332P	HITJ	60 - 44
HN46532-2	HITJ	59 - 61
HN46532-3	HITJ	59 - 74
HN46532P-2	HITJ	59 - 70
HN46532P-3	HITJ	59 - 73
HN46830	HITJ	56 - 47
HN46830P	HITJ	56 - 48
HN48016P	HITJ	59 - 18
HN48364P	HITJ	61 - 15
HN462316EP	HITJ	59 - 30
HN462532	HITJ	60 - 10
HN462716	HITJ	59 - 19
HN462716G	HITJ	59 - 20
HN462732	HITJ	60 - 17
HNVM3004	HAC	52 - 90
HNVM3008	HAC	55 -105
HRM2048	ECV	47 - 28
HRM2048#1	ECV	56 - 79
HRM2048#2	ECV	53 - 7
HRM2048#3	ECV	51 - 1
HRM2048#4	ECV	49 - 63
HRM2048#5	ECV	47 - 45
HRM2048#6	ECV	47 - 29
HXA100415AD	PHIN	28 - 11
HXA100415D	PHIN	28 - 19
HXA100422AD	PHIN	24 - 38
HXA100422D	PHIN	24 - 42
HYB4116-A3	SIEG	44 - 1
HYB4116-A4	SIEG	44 - 44
HYB4116-P3	SIEG	44 - 2
HYB4116-P4	SIEG	44 - 45
I100	ICC	75 - 71
I102	ICC	74 - 37
I103	ICC	74 - 38
I106	ICC	76 - 96
I107	ICC	76 - 97
I112	ICC	65 - 28
I113	ICC	83 - 57
I768	ICC	83 - 66
I769	ICC	83 - 67
ID2708	ITL	56 - 21
ID2716	ITL	58 -100
ID8155	ITL	27 - 80
ID8156	ITL	27 - 81
ID8185	ITL	37 - 61
ID8355	ITL	57 - 41
ID8355A-8	ITL	58 - 48
IM65X08-1ID	INL	30 - 33
IM65X08-1IJ	INL	30 - 34
IM65X08-1MD	INL	30 - 35
IM65X08-1MF	INL	30 - 36
IM65X08-1MJ	INL	30 - 37
IM65X08A-1ID	INL	30 - 29
IM65X08A-1IJ	INL	30 - 30
IM65X08A-1MD	INL	30 - 44
IM65X08A-1MF	INL	30 - 45
IM65X08A-1MJ	INL	30 - 46
IM65X08AID	INL	30 - 47
IM65X08AIJ	INL	30 - 48
IM65X08AMD	INL	30 - 49
IM65X08AMF	INL	30 - 50
IM65X08AMJ	INL	30 - 51
IM65X08CJ	INL	30 - 70
IM65X08HJ	INL	30 - 59
IM65X08ID	INL	30 - 60
IM65X08IJ	INL	30 - 61
IM65X08MD	INL	30 - 62
IM65X08MF	INL	30 - 63
IM65X08MJ	INL	30 - 64
IM65X18-1ID	INL	30 - 38
IM65X18-1IJ	INL	30 - 39
IM65X18-1MD	INL	30 - 40
IM65X18-1MF	INL	30 - 41
IM65X18-1MJ	INL	30 - 42
IM65X18A-1ID	INL	30 - 31
IM65X18A-1IJ	INL	30 - 32
IM65X18A-1MF	INL	30 - 52
IM65X18A-1MJ	INL	30 - 53
IM65X18AID	INL	30 - 54
IM65X18AIJ	INL	30 - 55
IM65X18AMD	INL	30 - 56
IM65X18AMF	INL	30 - 57
IM65X18AMJ	INL	30 - 58
IM65X18CJ	INL	30 - 71
IM65X18ID	INL	30 - 65
IM65X18IJ	INL	30 - 66
IM65X18MD	INL	30 - 67
IM65X18MF	INL	30 - 68
IM65X18MJ	INL	30 - 69

TYPE No.	MFRS	Pg&Line
IM2114-2CJN	INL	36 - 44
IM2114-2CPN	INL	36 - 45
IM2114-3CJN	INL	36 - 66
IM2114-3CPN	INL	36 - 67
IM2114-L2CJN	INL	36 - 46
IM2114-L2MJN	INL	36 - 47
IM2114-L3CJN	INL	36 - 68
IM2114-L3MJN	INL	36 - 69
IM2114-LCJN	INL	36 - 90
IM2114-LMJN	INL	36 - 91
IM2114CJN	INL	36 - 92
IM2114CPN	INL	36 - 93
IM2114L2CPN	INL	36 - 48
IM2114L2MJN/883B		36 - 49
	INL	
IM2114L3CPN	INL	36 - 70
IM2114L3MJN/883B		36 - 71
	INL	
IM2114LCPN	INL	36 - 94
IM2114LMJN/883B		36 - 95
	INL	
IM4116-2CDE	INL	21 - 87
IM4116-2CJE	INL	21 - 88
IM4116-2CPE	INL	21 - 89
IM4116-3CDE	INL	21 - 90
IM4116-3CJE	INL	21 - 91
IM4116-3CPE	INL	21 - 92
IM4116-4CDE	INL	21 - 93
IM4116-4CJE	INL	21 - 94
IM4116-4CPE	INL	21 - 95
IM5200CJG	INL	87 - 79
IM5600CDE	INL	46 - 77
IM5600CFE	INL	46 - 78
IM5600CJE	INL	46 - 79
IM5600CPE	INL	46 - 80
IM5600MDE	INL	46 - 81
IM5600MFE	INL	46 - 82
IM5600MJE	INL	46 - 83
IM5603ACDE	INL	48 - 60
IM5603ACFE	INL	48 - 61
IM5603ACJE	INL	48 - 62
IM5603ACPE	INL	48 - 63
IM5603AMDE	INL	48 - 82
IM5603AMFE	INL	48 - 83
IM5603AMJE	INL	48 - 64
IM5603CDE#	INL	48 - 65
IM5603MDE#	INL	48 - 66
IM5604CDE	INL	50 - 77
IM5604CFE#	INL	50 - 78
IM5604CJE	INL	50 - 79
IM5604CPE#	INL	50 - 80
IM5604MDE	INL	50 - 81
IM5604MFE	INL	50 - 82
IM5604MJE	INL	50 - 83
IM5608-1ID	INL	29 - 79
IM5608-1IJ	INL	29 - 80
IM5608-1MD	INL	29 - 81
IM5608-1MF	INL	29 - 82
IM5608-1MJ	INL	29 - 83
IM5608A-1ID	INL	29 - 39
IM5608A-1IJ	INL	29 - 40
IM5608A-1MD	INL	29 - 41
IM5608A-1MF	INL	29 - 42
IM5608A-1MS	INL	29 - 43
IM5608AID	INL	29 - 49
IM5608AIJ	INL	29 - 50
IM5608AMD	INL	29 - 51
IM5608AMF	INL	29 - 52
IM5608AMJ	INL	29 - 53
IM5608CJ	INL	30 - 17
IM5608CP	INL	30 - 18
IM5608ID	INL	29 -109
IM5608IJ	INL	29 -110
IM5608IP	INL	30 - 1
IM5608MD	INL	30 - 2
IM5608MF	INL	30 - 3
IM5608MJ	INL	30 - 4
IM5610CDE	INL	46 - 84
IM5610CFE	INL	46 - 85
IM5610CJE	INL	46 - 86
IM5610CPE	INL	46 - 87
IM5610MDE	INL	46 - 88
IM5610MFE	INL	46 - 89
IM5610MJE	INL	46 - 90
IM5623ACDE	INL	48 - 67
IM5623ACFE	INL	48 - 68
IM5623ACJE	INL	48 - 69
IM5623ACPE	INL	48 - 70
IM5623AMDE	INL	48 - 71
IM5623AMFE	INL	48 - 72
IM5623AMJE	INL	48 - 73
IM5623CDE	INL	48 - 74
IM5623CFE	INL	48 - 75
IM5623CPE	INL	48 - 76
IM5623MDE	INL	48 - 77
IM5623MFE	INL	48 - 78
IM5624CDE	INL	50 - 84
IM5624CFE#	INL	50 - 85
IM5624CJE	INL	50 - 86
IM5624CPE#	INL	50 - 87
IM5624MDE	INL	50 - 88
IM5624MFE	INL	50 - 89
IM5624MJE	INL	50 - 90
IM6312ACDN	INL	56 - 59
IM6312AIDN	INL	56 - 64
IM6312AIJN	INL	56 - 60
IM6312AMDN	INL	56 - 62
IM6312CDN	INL	56 - 65
IM6312CFN	INL	56 - 66
IM6312CJN	INL	56 - 67
IM6312IDN	INL	56 - 68
IM6312IFN	INL	56 - 61
IM6312IJN	INL	56 - 69
IM6312MDN	INL	56 - 70

Δ-Registered with JEDEC by this manufacturer

1. TYPE No. CROSS INDEX

IN TYPE NUMBER SEQUENCE

TYPE No.	MFRS	Pg&Line
IM6312MFN	INL	56 - 63
IM6312MJN	INL	56 - 71
IM6316IDG	INL	59 - 25
IM6316IJG	INL	59 - 26
IM6316MDG	INL	59 - 27
IM6316MJG	INL	59 - 28
IM6364MJG	INL	60 - 50
IM6504IDN	INL	40 - 18
IM6504IJN	INL	40 - 19
IM6504IPN	INL	40 - 20
IM6504MDN	INL	40 - 21
IM6504MFN	INL	40 - 22
IM6504MJN	INL	40 - 23
IM6508IDE	INL	30 - 5
IM6512A-IDN	INL	21 - 76
IM6512A-IJN	INL	21 - 77
IM6512A-MDN	INL	21 - 78
IM6512A-MFN	INL	21 - 79
IM6512A-MJN	INL	21 - 80
IM6512CJN	INL	21 - 86
IM6512IDN	INL	21 - 81
IM6512IJN	INL	21 - 82
IM6512MDN	INL	21 - 83
IM6512MFN	INL	21 - 84
IM6512MJN	INL	21 - 85
IM6514CJN	INL	33 - 4
IM6514CPN	INL	33 - 5
IM6514IDN	INL	33 - 6
IM6514IJN	INL	33 - 7
IM6514IPN	INL	33 - 8
IM6514MDN	INL	33 - 9
IM6514MFN	INL	33 - 10
IM6514MJN	INL	33 - 11
IM6518-1ID	INL	29 - 84
IM6518-1IJ	INL	29 - 85
IM6518-1MD	INL	29 - 86
IM6518-1MF	INL	29 - 87
IM6518-1MJ	INL	29 - 88
IM6518A-1ID	INL	29 - 44
IM6518A-1IJ	INL	29 - 45
IM6518A-1MD	INL	29 - 46
IM6518A-1MF	INL	29 - 47
IM6518A-1MS	INL	29 - 48
IM6518AID	INL	29 - 54
IM6518AIJ	INL	29 - 55
IM6518AMD	INL	29 - 56
IM6518AMF	INL	29 - 57
IM6518AMJ	INL	29 - 58
IM6518CJ	INL	30 - 19
IM6518CP	INL	30 - 20
IM6518ID	INL	30 - 6
IM6518IJ	INL	30 - 7
IM6518IP	INL	30 - 8
IM6518MD	INL	30 - 9
IM6518MF	INL	30 - 10
IM6518MJ	INL	30 - 11
IM6523IDE	INL	23 - 85
IM6523MPE	INL	23 - 86
IM6551AIDF	INL	24 - 91
IM6551AIJF	INL	24 - 92
IM6551AMDF	INL	24 - 93
IM6551AMJF	INL	24 - 94
IM6551CJF	INL	25 - 30
IM6551CPF	INL	25 - 31
IM6551IDF	INL	25 - 18
IM6551IJF	INL	25 - 19
IM6551IPF	INL	25 - 20
IM6551MJF	INL	25 - 21
IM6551MPF	INL	25 - 22
IM6561AIDN	INL	24 - 95
IM6561AIJN	INL	24 - 96
IM6561AMDN	INL	24 - 97
IM6561AMJN	INL	24 - 98
IM6561CDN	INL	25 - 32
IM6561CJN	INL	25 - 33
IM6561CPN	INL	25 - 34
IM6561IDN	INL	25 - 23
IM6561IJN	INL	25 - 24
IM6561IPN	INL	25 - 25
IM6561MJF	INL	25 - 26
IM6561MPF	INL	25 - 27
IM6653AIDG	INL	53 - 90
IM6653AIJG	INL	53 - 91
IM6653AMJG	INL	53 - 94
IM6653IDG	INL	53 - 92
IM6653IJG	INL	53 - 93
IM6653MDG	INL	53 - 95
IM6653MJG	INL	53 - 96
IM6654AIDG	INL	52 - 88
IM6654AIJG	INL	52 - 89
IM6654AMJG	INL	52 - 93
IM6654IDG	INL	52 - 91
IM6654IJG	INL	52 - 92
IM6654MDG	INL	52 - 94
IM6654MJG	INL	52 - 95
IM7027-1CJE	INL	38 - 55
IM7027-2CJE	INL	38 - 65
IM7027-2CTE	INL	38 - 66
IM7027-3CJE	INL	38 - 93
IM7027-3CTE	INL	38 - 94
IM7027-4CJE	INL	39 - 15
IM7114CPN	INL	32 - 98
IM7114L2CJN	INL	32 - 93
IM7114L3CJN	INL	32 - 95
IM7114LCJN	INL	32 - 99
IM7141-2CJN	INL	39 - 76
IM7141-2CPN	INL	42 - 28
IM7141-2MJN	INL	39 - 77
IM7141-2MJN/B	INL	39 - 78
IM7141-3CJN	INL	39 - 81
IM7141-3CPN	INL	42 - 75
IM7141-3MJN	INL	39 - 82
IM7141-3MJN/B	INL	39 - 83
IM7141CJN	INL	39 - 86
IM7141L2CJN	INL	39 - 79
IM7141L2CPN	INL	39 - 80
IM7141L3CJN	INL	39 - 84
IM7141L3CPN	INL	39 - 85
IM7141LCJN	INL	39 - 87
IM7141MJN	INL	39 - 88
IM7141MJN/B	INL	39 - 89
IM7147-3CJN	INL	42 - 3
IM7147CJN	INL	42 - 7
IM7147L-3CJN	INL	42 - 4
IM7147LCJN	INL	42 - 8
IM7147LM-JN	INL	42 - 11
ITT4027-2D	ITTG	38 - 67
ITT4027-2N	ITTG	38 - 68
ITT4027-3D	ITTG	38 - 95
ITT4027-3N	ITTG	38 - 96
ITT4027-4D	ITTG	39 - 16
ITT4027-4N	ITTG	39 - 17
ITT4027-6D	ITTG	39 - 52
ITT4027-6N	ITTG	39 - 53
ITT4116-2D	ITTG	43 - 75
ITT4116-2N	ITTG	43 - 76
ITT4116-3D	ITTG	44 - 3
ITT4116-3N	ITTG	44 - 4
ITT4116-4D	ITTG	44 - 46
ITT4116-4N	ITTG	44 - 47
KM8655	TAI	52-103
KM8656	TAI	56 - 49
KM8657	TAI	59 - 32
KM8680	TAI	38 - 48
KR2376	SMC	64 - 94
KR3600	SMC	64 - 96
KR3600-PRO	SMC	64 - 98
L2114-2CA	EMM	34 - 13
L2114-2CB	EMM	34 - 14
L2114-2CE	EMM	34 - 15
L2114-3CA	EMM	35 - 1
L2114-3CB	EMM	35 - 2
L2114-3CE	EMM	35 - 3
L2114-UCA	EMM	36 - 96
L2114UCB	EMM	36 - 97
L2114UCE	EMM	36 - 98
L2114UMA	EMM	36 - 99
L2141-3	EMM	42 - 17
L2141-4	EMM	42 - 29
L2141-5	EMM	42 - 50
L21143MA	EMM	36 - 72
M5G1400P	MITJ	47 - 31
M5K4116P-2	MITJ	43 - 77
M5K4116P-3	MITJ	44 - 5
M5K4116S-2	MITJ	43 - 78
M5K4116S-3	MITJ	44 - 6
M5K4116S4	MITJ	44 - 48
M5K4164S-15	MITJ	45 - 36
M5K4164S-20	MITJ	45 - 44
M5L2101AP	MITJ	26 - 22
M5L2101AP-4	MITJ	26 - 44
M5L2101AP2	MITJ	26 - 1
M5L2101AS	MITJ	26 - 23
M5L2101AS2	MITJ	26 - 2
M5L2101AS4	MITJ	26 - 45
M5L2102AP-4	MITJ	32 - 12
M5L2102AS-4	MITJ	32 - 13
M5L2111AP	MITJ	26 - 24
M5L2111AP-4	MITJ	26 - 46
M5L2111AP2	MITJ	26 - 3
M5L2111AS	MITJ	26 - 25
M5L2111AS2	MITJ	26 - 4
M5L2111AS4	MITJ	26 - 47
M5L2112AP	MITJ	26 - 26
M5L2112AP-4	MITJ	26 - 48
M5L2112AP2	MITJ	26 - 5
M5L2112AS	MITJ	26 - 27
M5L2112AS2	MITJ	26 - 6
M5L2112AS4	MITJ	26 - 49
M5L2114LP	MITJ	35 - 81
M5L2114LP-2	MITJ	34 - 16
M5L2114LP-3	MITJ	35 - 4
M5L2114LS	MITJ	35 - 82
M5L2114LS-2	MITJ	34 - 17
M5L2114LS-3	MITJ	35 - 5
M5L2708K	MITJ	54 - 19
M5L2708K65	MITJ	54 - 20
M5L2708S	MITJ	56 - 22
M5L2708S-65	MITJ	56 - 43
M5L2716K	MITJ	57 - 26
M5L2716K-65	MITJ	57 - 27
M5L2732K	MITJ	60 - 45
M5L2732K-6	MITJ	59 - 47
M5L5101LP-1	MITJ	25 - 35
M5T4044P-20	MITJ	41 - 2
M5T4044P-30	MITJ	41 - 52
M5T4044P-45	MITJ	41 - 85
M5T4044S-20	MITJ	41 - 3
M5T4044S-30	MITJ	41 - 53
M5T4044S-45	MITJ	41 - 86
M74LS91P	MITJ	82 - 36
M74LS95BP	MITJ	72 - 29
M74LS96P	MITJ	74 - 73
M74LS164P	MITJ	78 - 99
M74LS170P	MITJ	18 - 50
M74LS173AP	MITJ	70 - 97
M74LS173P	MITJ	70 - 98
M74LS194AP	MITJ	72 - 30
M74LS195AP	MITJ	72 - 31
M74LS295AP	MITJ	72 - 40
M74LS299P	MITJ	78 - 56
M74LS323P	MITJ	78 -100
M74LS395P	MITJ	70 - 99
M74LS630P	MITJ	18 - 51
M74LS670P	MITJ	74 - 43
M120-2D1	SGAI	26 - 50
M120-2F1	SGAI	26 - 51
M120D1	SGAI	26 - 67
M120F1	SGAI	26 - 68
M142A-B1	SGAI	84 -101
M142A-D1	SGAI	84 -102
M142B1	SGAI	84 -105
M142D1	SGAI	84 -106
M200M1AA	SGAI	62 -100
M200M1XX	SGAI	62 -101
M203	ICC	76 - 98
M204	ICC	66 - 80
M206	ICC	75 - 73
M207	ICC	75 - 72
M250D1	SGAI	88 - 23
M252B1AA	SGAI	88 - 27
M252B1XX	SGAI	88 - 25
M252D1AA	SGAI	88 - 28
M252D1XX	SGAI	88 - 26
M253B1AA	SGAI	88 - 21
M253B1XX	SGAI	88 - 19
M253D1AA	SGAI	88 - 22
M253D1XX	SGAI	88 - 20
M254B1XX	SGAI	88 - 24
M330AB1	SGAI	32 - 84
M1406	AMD	85 - 10
M1407	AMD	85 - 11
M1506	AMD	85 - 12
M1507	AMD	85 - 13
M2102AB1	SGAI	31 - 75
M2102AB1-2	SGAI	31 - 33
M2102AB1-4	SGAI	32 - 14
M2102AB1-6	SGAI	32 - 70
M2102AD1	SGAI	31 - 76
M2102AD1-2	SGAI	31 - 34
M2102AD1-4	SGAI	32 - 15
M2102AD1-6	SGAI	32 - 71
M2102AF1	SGAI	31 - 77
M2102AF1-2	SGAI	31 - 35
M2102AF1-4	SGAI	32 - 16
M2102AF1-6	SGAI	32 - 72
M2102ALB1	SGAI	31 - 78
M2102ALB1-2	SGAI	31 - 36
M2102ALB1-4	SGAI	32 - 17
M2102ALD1	SGAI	31 - 79
M2102ALD1-2	SGAI	31 - 37
M2102ALD1-4	SGAI	32 - 18
M2102ALF1	SGAI	31 - 80
M2102ALF1-2	SGAI	31 - 38
M2102ALF1-4	SGAI	32 - 19
M2114-3MA	EMM	35 - 6
M2114-3ME	EMM	35 - 7
M2114-UMA	EMM	36 -100
M2316E-D1	SGAI	58 - 6
M2704D1	SGAI	52 - 97
M2708-1D1	SGAI	56 - 9
M2708-4D1	SGAI	56 - 44
M2708D1	SGAI	56 - 23
M4027P-2B1	SGAI	38 - 69
M4027P-2D1	SGAI	38 - 70
M4027P-2F1	SGAI	38 - 71
M4027P-3B1	SGAI	38 - 97
M4027P-3D1	SGAI	38 - 98
M4027P-3F1	SGAI	38 - 99
M4027P-4B1	SGAI	39 - 18
M4027P-4D1	SGAI	39 - 19
M4027P-4F1	SGAI	39 - 20
M4104UMC	EMM	36 - 52
M4104USC	EMM	36 - 50
M4116-2F1	SGAI	43 - 79
M4116-3F1	SGAI	44 - 7
M4116-4F1	SGAI	44 - 49
M4116P-2B1	SGAI	43 - 80
M4116P-2D1	SGAI	43 - 81
M4116P-2F1	SGAI	43 - 82
M4116P-3B1	SGAI	44 - 8
M4116P-3D1	SGAI	44 - 9
M4116P-3F1	SGAI	44 - 10
M4116P-4B1	SGAI	44 - 50
M4116P-4D1	SGAI	44 - 51
M4116P-4F1	SGAI	44 - 52
M4200-UMC	EMM	42 - 51
M4200USC	EMM	42 - 30
M8108-3MD	EMM	37 - 73
M8108-5MD	EMM	37 - 85
M8118-3MD	EMM	37 - 74
M8118-5MD	EMM	37 - 86
M36000-4B1	SGAI	60 - 53
M36000-4D1	SGAI	60 - 54
M36000-4F1	SGAI	60 - 55
M36000-5B1	SGAI	60 - 57
M36000-5D1	SGAI	60 - 58
M36000-5F1	SGAI	60 - 59
JANM38510/00901BAA	MOTA	67 - 62
JANM38510/00901BAB	MOTA	67 - 63
JANM38510/00901BCA	MOTA SIC	67 - 64
JANM38510/00901BCB	MOTA SIC	67 - 65
JANM38510/00901BDA	none	67 - 66
JANM38510/00901BDB	none	67 - 67
JANM38510/00901CAA	MOTA	67 - 68
JANM38510/00901CAB	MOTA	67 - 69
JANM38510/00901CCA	MOTA SIC	67 - 70
JANM38510/00901CCB	MOTA SIC	67 - 71
JANM38510/00901CDA	none	67 - 72
JANM38510/00901CDB	none	67 - 73
JANM38510/00902BEA	MOTA SIC	74 - 58
JANM38510/00902BEB	MOTA SIC	74 - 59
JANM38510/00902BFA	MOTA SIC	74 - 60
JANM38510/00902BFB	MOTA SIC	74 - 61
JANM38510/00902CEA	MOTA SIC	74 - 62
JANM38510/00902CEB	MOTA SIC	74 - 63
JANM38510/00902CFA	MOTA SIC	74 - 64
JANM38510/00902CFB	MOTA SIC	74 - 65
JANM38510/00903BCA	SIC	81 - 36
JANM38510/00903BCB	SIC	81 - 37
JANM38510/00903CCA	SIC	81 - 38
JANM38510/00903CCB	SIC	81 - 39
JANM38510/00904BEA	MOTA	80 - 24
JANM38510/00904BEB	MOTA	80 - 25
JANM38510/00904BFA	MOTA	80 - 26
JANM38510/00904BFB	MOTA	80 - 27
JANM38510/00904CEA	MOTA	80 - 28
JANM38510/00904CEB	MOTA	80 - 29
JANM38510/00904CFA	MOTA	80 - 30
JANM38510/00904CFB	MOTA	80 - 31
JANM38510/00905BEA	MOTA SIC	68 - 7
JANM38510/00905BEB	MOTA SIC	68 - 8
JANM38510/00905BFA	MOTA SIC	68 - 9
JANM38510/00905BFB	MOTA SIC	68 - 10
JANM38510/00905CEA	MOTA SIC	68 - 11
JANM38510/00905CEB	MOTA SIC	68 - 12
JANM38510/00905CFA	MOTA SIC	68 - 13
JANM38510/00905CFB	MOTA SIC	68 - 14
JANM38510/00906BEA	MOTA	69 - 3
JANM38510/00906BEB	MOTA	69 - 4
JANM38510/00906BFA	MOTA	69 - 5
JANM38510/00906BFB	MOTA	69 - 6
JANM38510/00906CEA	MOTA	69 - 7
JANM38510/00906CEB	MOTA	69 - 8
JANM38510/00906CFA	MOTA	69 - 9
JANM38510/00906CFB	MOTA	69 - 10
JANM38510/02801BCA	none	66 - 1
JANM38510/02801BCB	none	66 - 2
JANM38510/02801BDA	NSC	66 - 3
JANM38510/02801BDB	none	66 - 4
JANM38510/02801CCA	none	66 - 5
JANM38510/02801CCB	none	66 - 6
JANM38510/02801CDA	none	66 - 7
JANM38510/02801CDB	none	66 - 8
JANM38510/05701BCA	none	75 - 28
JANM38510/05701BCB	RCA	75 - 29
JANM38510/05701BCC	MOTA	75 - 30
JANM38510/05701CCA	none	75 - 31
JANM38510/05701CCB	RCA	75 - 32
JANM38510/05701CCC	MOTA	75 - 33
JANM38510/05702BEB	RCA	79 - 53
JANM38510/05702BFA	RCA	79 - 54
JANM38510/05702CEB	RCA	79 - 55
JANM38510/05702CFA	RCA	79 - 56
JANM38510/05703BEA	SSS	73 - 81
JANM38510/05703BEB	RCA	73 - 82
JANM38510/05703BEC	SSS	73 - 83
JANM38510/05703BFA	RCA	73 - 84
JANM38510/05703CEA	SSS	73 - 85
JANM38510/05703CEB	RCA	73 - 86
JANM38510/05703CEC	SSS	73 - 87
JANM38510/05703CFA	RCA	73 - 88
JANM38510/05704BEA	SSS	79 - 57
JANM38510/05704BEB	RCA	79 - 58
JANM38510/05704BEC	SSS	79 - 59
JANM38510/05704BFA	RCA	79 - 60
JANM38510/05704CEA	SSS	79 - 61
JANM38510/05704CEB	RCA	79 - 62
JANM38510/05704CEC	SSS	79 - 63
JANM38510/05704CFA	RCA	79 - 64
JANM38510/05705BFA	RCA	84 - 28
JANM38510/05705CFA	RCA	84 - 29
JANM38510/07601BEB	AMD	72 - 80
JANM38510/07601BFB	AMD	72 - 81
JANM38510/07601CEB	AMD	72 - 82
JANM38510/07601CFB	AMD	72 - 83
JANM38510/15901BEA	MOTA	67 - 9
JANM38510/15901BEB	MOTA	67 - 10
JANM38510/15901BFA	MOTA	67 - 11
JANM38510/15901BFB	MOTA	67 - 12
JANM38510/15901CEA	MOTA	67 - 13
JANM38510/15901CEB	MOTA	67 - 14
JANM38510/15901CFA	MOTA	67 - 15
JANM38510/15901CFB	MOTA	67 - 16
JANM38510/15902BEA	MOTA	82 - 81
JANM38510/15902BEB	MOTA	82 - 82
JANM38510/15902BFA	MOTA	82 - 83
JANM38510/15902BFB	MOTA	82 - 84
JANM38510/15902CEA	MOTA	82 - 85
JANM38510/15902CEB	MOTA	82 - 86
JANM38510/15902CFA	MOTA	82 - 87
JANM38510/15902CFB	MOTA	82 - 88
JANM38510/20101BJB	HAS	47 - 24
JANM38510/20101CJB	HAS	47 - 25
JANM38510/20301BEA	SIC	48 - 35
JANM38510/20301BEB	HAS SIC	48 - 36
JANM38510/20301BEC	none	48 - 37
JANM38510/20301BFC	none	48 - 38
JANM38510/20301CEC	none	48 - 39
JANM38510/20301CFA	none	48 - 40
JANM38510/20301CFB	none	48 - 41
JANM38510/20301CFC	none	48 - 42
JANM38510/20302BEA	SIC	48 - 43
JANM38510/20302BEB	HAS SIC	48 - 44
JANM38510/20302BEC	none	48 - 45
JANM38510/20302BFC	none	48 - 46
JANM38510/20302CEA	SIC	48 - 47
JANM38510/20302CEB	HAS SIC	48 - 48
JANM38510/20302CEC	none	48 - 49
JANM38510/20302CFC	none	48 - 50
JANM38510/20401BEA	SIC	50 - 54
JANM38510/20401BEB	HAS SIC	50 - 55

Δ-Registered with JEDEC by this manufacturer

1. TYPE No. CROSS INDEX

IN TYPE NUMBER SEQUENCE

TYPE No.	MFRS	Pg&Line
JANM38510/20401BEC	none	50 - 56
JANM38510/20401BFC	none	50 - 57
JANM38510/20401CEA	SIC	50 - 58
JANM38510/20401CEB	HAS SIC	50 - 59
JANM38510/20401CEC	none	50 - 60
JANM38510/20401CFC	none	50 - 61
JANM38510/20402BEA	SIC	50 - 62
JANM38510/20402BEB	HAS SIC	50 - 63
JANM38510/20402BEC	none	50 - 64
JANM38510/20402BFC	none	50 - 65
JANM38510/20402CEA	SIC	50 - 66
JANM38510/20402CEB	HAS SIC	50 - 67
JANM38510/20402CEC	none	50 - 68
JANM38510/20402CFC	none	50 - 69
JANM38510/20601BVB	HAS SIC	53 - 73
JANM38510/20601CVB	HAS SIC	53 - 74
JANM38510/20602BVB	HAS SIC	53 - 75
JANM38510/20602CVB	HAS SIC	53 - 76
JANM38510/20901BVB	SIC	57 - 17
JANM38510/20901CVB	SIC	57 - 18
JANM38510/20902BVB	SIC	57 - 19
JANM38510/20902CVB	SIC	57 - 20
JANM38510/20903BJB	SIC	55 - 60
JANM38510/20903CJB	SIC	55 - 61
JANM38510/20904BJB	SIC	55 - 62
JANM38510/20904CJB	SIC	55 - 63
JANM38510/23501BWC	TII	39 - 65
JANM38510/23501CWC	TII	39 - 66
JANM38510/23502BVC	TII	39 - 67
JANM38510/23502CVC	TII	39 - 68
JANM38510/30106BEA	MOTA	76 - 11
JANM38510/30106BEB	AMD FSC MOTA TII	76 - 12
JANM38510/30106BFA	MOTA	76 - 13
JANM38510/30106BFB	AMD MOTA TII	76 - 14
JANM38510/30106CEA	MOTA	76 - 15
JANM38510/30106CEB	AMD FSC MOTA TII	76 - 16
JANM38510/30106CFA	MOTA	76 - 17
JANM38510/30106CFB	AMD MOTA TII	76 - 18
JANM38510/30601BEA	MOTA SIC	68 - 32
JANM38510/30601BEB	AMD MOTA SIC TII	68 - 33
JANM38510/30601BFA	MOTA SIC	68 - 34
JANM38510/30601BFB	AMD MOTA SIC TII	68 - 35
JANM38510/30601CEA	MOTA SIC	68 - 36
JANM38510/30601CEB	AMD MOTA SIC TII	68 - 37
JANM38510/30601CFA	SIC	68 - 38
JANM38510/30601CFB	AMD MOTA SIC TII	68 - 39
JANM38510/30602BEA	SIC	69 - 13
JANM38510/30602BEB	AMD SIC TII	69 - 14
JANM38510/30602BFA	SIC	69 - 15
JANM38510/30602BFB	AMD SIC TII	69 - 16
JANM38510/30602CEA	SIC	69 - 17
JANM38510/30602CEB	cont.next col.	
JANM38510/30602CEB	(cont.) AMD SIC TII	69 - 18
JANM38510/30602CFA	SIC	69 - 19
JANM38510/30602CFB	AMD SIC TII	69 - 20
JANM38510/30603BCA	SIC	68 - 40
JANM38510/30603BCB	FSC SIC TII	68 - 41
JANM38510/30603BDA	SIC	68 - 42
JANM38510/30603BDB	SIC TII	68 - 43
JANM38510/30603CCA	SIC	68 - 44
JANM38510/30603CCB	FSC SIC TII	68 - 45
JANM38510/30603CDA	SIC	68 - 46
JANM38510/30603CDB	SIC TII	68 - 47
JANM38510/30604BEA	SIC	74 - 96
JANM38510/30604BEB	SIC TII	74 - 97
JANM38510/30604BFA	SIC	74 - 98
JANM38510/30604BFB	SIC TII	75 - 1
JANM38510/30604CEA	SIC	75 - 2
JANM38510/30604CEB	SIC TII	75 - 3
JANM38510/30604CFA	SIC	75 - 4
JANM38510/30604CFB	SIC TII	75 - 5
JANM38510/30605BAB	AMD FSC	81 - 40
JANM38510/30605BAC	FSC	81 - 41
JANM38510/30605BCA	SIC	81 - 42
JANM38510/30605BCB	SIC	81 - 43
JANM38510/30605BDA	SIC	81 - 44
JANM38510/30605BDB	SIC	81 - 45
JANM38510/30605CAB	AMD FSC	81 - 46
JANM38510/30605CAC	FSC	81 - 47
JANM38510/30605CCA	SIC	81 - 48
JANM38510/30605CCB	SIC	81 - 49
JANM38510/30605CDA	SIC	81 - 50
JANM38510/30605CDB	SIC	81 - 51
JANM38510/30606BCA	SIC	67 - 87
JANM38510/30606BCB	SIC TII	67 - 88
JANM38510/30606BDA	SIC	68 - 1
JANM38510/30606BDB	SIC TII	68 - 2
JANM38510/30606CCA	SIC	68 - 3
JANM38510/30606CCB	SIC TII	68 - 4
JANM38510/30606CDA	SIC	68 - 5
JANM38510/30606CDB	SIC TII	68 - 6
JANM38510/30607BEA	SIC	68 - 48
JANM38510/30607BEB	SIC TII	68 - 49
JANM38510/30607BFA	SIC	68 - 50
JANM38510/30607BFB	SIC TII	68 - 51
JANM38510/30607CEA	SIC	68 - 52
JANM38510/30607CEB	SIC TII	68 - 53
JANM38510/30607CFA	SIC	68 - 54
JANM38510/30607CFB	SIC TII	68 - 55
M53284P	MITJ	18 - 52
M53289P	MITJ	20 - 83
M53291P	MITJ	82 - 61
M53295P	MITJ	68 - 56
M53296P	MITJ	74 - 74
M53364P	MITJ	77 -110
M53365P	MITJ	77 - 79
M53366P	MITJ	80 - 79
M53370P	MITJ	18 - 53
M53374P	MITJ	76 - 19
M53375P	MITJ	69 - 78
M53398P	MITJ	78 - 1
M53399P	MITJ	78 - 2
M53478P	MITJ	65 - 58
M54700K	MITJ	47 - 56
M54700P	MITJ	47 - 57
M54700S	MITJ	49 - 47
M54730K	MITJ	46 - 18
M54730P	MITJ	46 - 19
M54730S	MITJ	46 - 91
M58333-XXXP	MITJ	59 - 58
M58334-XXXP	MITJ	60 - 46
M58725P	MITJ	38 - 12
M58725P-15	MITJ	38 - 8
M58725S	MITJ	38 - 13
M58725S-15	MITJ	37 -105
M58764S20	MITJ	45 - 45
M58981P	MITJ	33 - 30
M58981S-45	MITJ	33 - 31
MB1412A	FMI	88 - 33
MB7072E	FMI	24 - 33
MB7072N	FMI	24 - 39
MB7122E	FMI	53 - 42
MB7128E	FMI	56 -105
MB7132E	FMI	56 -106
MB7138E	FMI	58 - 60
MB8116E	FMI	44 - 11
MB8116H	FMI	43 - 83
MB8132EH	FMI	45 - 12
MB8132EL	FMI	45 - 13
MB8164E	FMI	45 - 46
MB8167	FMI	45 - 11
MB8216E	FMI	43 - 59
MB8216N	FMI	43 - 84
MB8264-15E	FMI	45 - 37
MB8264-20N	FMI	45 - 47
MB8404E	FMI	40 - 28
MB8414E	FMI	33 - 17
MBC5101L4	AMI	24 - 21
MBC6508A	AMI	30 - 43
MBC6831B	AMI	57 - 59
MBM2147E	FMI	42 - 9
MBM2147H	FMI	42 - 5
MBM2148-55L	FMI	33 - 69
MBM2148-70L	FMI	33 - 76
MBM2149-45	FMI	33 - 64
MBM2149-55	FMI	33 - 70
MBM2149-55L	FMI	33 - 71
MBM2149-70	FMI	33 - 77
MBM2149-70L	FMI	33 - 78
MBM2716	FMI	59 - 4
MBM2732	FMI	60 - 18
MBM10415A	FMI	28 - 30
MBM10415AH	FMI	28 - 20
MBM10422	FMI	24 - 32
MBM10470	FMI	39 - 95
MBM10474	FMI	32-102
MBM93419	FMI	21 - 68
MC686L	MOTA	73 - 57
MC686P	MOTA	73 - 58
MC894P	MOTA	65-101
MC1694L	MOTA	73 - 56
MC2102A4	ITL	27 - 89
MC4004F	MOTA	19 - 15
MC4004L	MOTA	19 - 16
MC4004P	MOTA	19 - 17
MC4005F	MOTA	19 - 18
MC4005L	MOTA	19 - 19
MC4005P	MOTA	19 - 20
MC4012L	MOTA	71-107
MC4012P	MOTA	71-108
MC4039P	MOTA	63 - 44
MC4304F	MOTA	19 - 21
MC4304L	MOTA	19 - 22
MC4305F	MOTA	19 - 23
MC4305L	MOTA	19 - 24
MC5101-4	ITL	25 - 52
MC5101L-4	ITL	25 - 53
MC5484L	MOTA	19 - 25
MC5494L	MOTA	73 - 32
MC5495F	MOTA	71 - 93
MC5495L	MOTA	71 - 94
MC5496L	MOTA	74 - 75
MC7270L	MOTA	68 - 69
MC7270P	MOTA	68 - 70
MC7271L	MOTA	68 - 71
MC7271P	MOTA	68 - 72
MC7494L	MOTA	73 - 33
MC7495L	MOTA	71 - 95
MC7496L	MOTA	66 - 81
MC8270L	MOTA	69 - 1
MC8271L	MOTA	69 - 2
MC8300L	MOTA	69 - 79
MC8300P	MOTA	69 - 80
MC8328L	MOTA	82 - 71
MC8328P	MOTA	82 - 72
MC9300L	MOTA	69 - 81
MC9328L	MOTA	82 - 73
MC10141L	MOTA	73 - 14
MC10141P	MOTA	73 - 15
MC10176L	MOTA	76 - 84
MC10176P	MOTA	76 - 85
MC10186L	MOTA	76 - 86
MC10541F	MOTA	73 - 16
MC10541L	MOTA	73 - 17
MC14006BAL	MOTA	75 - 48
MC14006BCL	MOTA	75 - 49
MC14006BCP	MOTA	75 - 50
MC14014BAL	MOTA	80 - 7
MC14014BCL	MOTA	80 - 8
MC14014BCP	MOTA	80 - 9
MC14015BAL	MOTA	74 - 12
MC14015BCL	MOTA	74 - 13
MC14015BCP	MOTA	74 - 14
MC14021BAL	MOTA	80 - 10
MC14021BCL	MOTA	80 - 11
MC14021BCP	MOTA	80 - 12
MC14034BAL	MOTA	77 - 43
MC14034BCL	MOTA	77 - 44
MC14034BCP	MOTA	77 - 45
MC14035BAL	MOTA	66 - 26
MC14035BCL	MOTA	66 - 27
MC14035BCP	MOTA	66 - 28
MC14076BAL	MOTA	66 - 46
MC14076BCL	MOTA	66 - 47
MC14076BCP	MOTA	66 - 48
MC14094BAL	MOTA	81 - 7
MC14094BCL	MOTA	81 - 8
MC14094BCP	MOTA	81 - 9
MC14174BAL	MOTA	75 - 98
MC14174BCL	MOTA	75 - 99
MC14174BCP	MOTA	76 - 1
MC14175BAL	MOTA	66 - 52
MC14175BCL	MOTA	66 - 53
MC14175BCP	MOTA	66 - 54
MC14194BAL	MOTA	66 - 49
MC14194BCL	MOTA	66 - 50
MC14194BCP	MOTA	66 - 51
MC14517BAL	MOTA	84 - 68
MC14517BCL	MOTA	84 - 69
MC14517BCP	MOTA	84 - 70
MC14557BAL	MOTA	84 - 42
MC14557BCL	MOTA	84 - 43
MC14557BCP	MOTA	84 - 44
MC14562BAL	MOTA	85 - 20
MC14562BCL	MOTA	85 - 21
MC14562BCP	MOTA	85 - 22
MC14562CL	MOTA	85 - 24
MC14562CP	MOTA	85 - 25
MC14580BAL	MOTA	18 - 80
MC14580BCL	MOTA	18 - 82
MC14580BCP	MOTA	18 - 83
MC29100LC	MOTA	87 - 84
MC29100LM	MOTA	87 - 85
MC29101LC	MOTA	87 - 86
MC29101LM	MOTA	87 - 87
MC54165F	MOTA	80 - 57
MC54165L	MOTA	80 - 58
MC54195L	MOTA	71 - 53
MC74165L	MOTA	80 - 59
MC74195L	MOTA	71 - 54
MC82100LC	MOTA	87 - 88
MC82100LM	MOTA	87 - 89
MC82101LC	MOTA	87 - 90
MC82101LM	MOTA	87 - 91
MCH-01	MATC	62 - 96
MCM21L14-20L	MOTA	34 - 18
MCM21L14-20P	MOTA	34 - 19
MCM21L14-25L	MOTA	34 - 67
MCM21L14-25P	MOTA	34 - 68
MCM21L14-30L	MOTA	35 - 8
MCM21L14-30P	MOTA	35 - 9
MCM21L14-45L	MOTA	35 - 83
MCM21L14-45P	MOTA	35 - 84
MCM21L14C20	MOTA	34 - 20
MCM21L14C25	MOTA	34 - 69
MCM21L14C30	MOTA	35 - 10
MCM21L14C45	MOTA	35 - 85
MCM21L14P20	MOTA	34 - 21
MCM21L14P25	MOTA	34 - 70
MCM21L14P30	MOTA	35 - 11
MCM21L14P45	MOTA	35 - 86
MCM21L15AC-45	MOTA	30-100
MCM21L15AC-70	MOTA	31 - 2
MCM21L25AC-45	MOTA	30-101
MCM21L25AC-70	MOTA	31 - 3
MCM25A32C	MOTA	60 - 15
MCM25A32L	MOTA	60 - 16
MCM27A08C	MOTA	56 - 2
MCM27A08L	MOTA	56 - 3
MCM27A16C	MOTA	57 - 56
MCM27A16L	MOTA	57 - 57
MCM66L41-20C	MOTA	41 - 4
MCM66L41-20JL	MOTA	41 - 5
MCM66L41-20NL	MOTA	41 - 6
MCM66L41-20P	MOTA	41 - 7
MCM66L41-25C	MOTA	41 - 30
MCM66L41-25JL	MOTA	41 - 31
MCM66L41-25NL	MOTA	41 - 32
MCM66L41-25P	MOTA	41 - 33
MCM66L41-30C	MOTA	41 - 54
MCM66L41-30JL	MOTA	41 - 55
MCM66L41-30NL	MOTA	41 - 56
MCM66L41-30P	MOTA	41 - 57
MCM66L41-45C	MOTA	41 - 87
MCM66L41-45JL	MOTA	41 - 88
MCM66L41-45NL	MOTA	41 - 89
MCM66L41-45P	MOTA	41 - 90
MCM68A10CL	MOTA	22 - 22
MCM68A10CP	MOTA	22 - 23
MCM68A10L	MOTA	22 - 24
MCM68A10P	MOTA	22 - 25
MCM68A30AC	MOTA	54 - 84
MCM68A30AP	MOTA	54 - 85
MCM68A308C	MOTA	54 - 86
MCM68A308L	MOTA	54 - 87
MCM68A308P	MOTA	54 - 88
MCM68A316AC	MOTA	57-102
MCM68A316AP	MOTA	57-103
MCM68A316EC	MOTA	57-104
MCM68A316EP	MOTA	57-105
MCM68A332C	MOTA	59 - 59
MCM68A332P	MOTA	59 - 60
MCM68A364C	MOTA	60 - 82
MCM68A364L	MOTA	60 - 83
MCM68A364P	MOTA	60 - 84
MCM68A708C	MOTA	56 - 4
MCM68A708L	MOTA	56 - 5
MCM68A764C	MOTA	60 - 90
MCM68A764L	MOTA	60 - 91
MCM68B10L	MOTA	22 - 14
MCM68B10P	MOTA	22 - 15
MCM68B30AC	MOTA	54 - 78
MCM68B30AP	MOTA	54 - 79
MCM68B308C	MOTA	54 - 80
MCM68B308L	MOTA	54 - 81
MCM68B308P	MOTA	54 - 82
MCM68B364C	MOTA	60 - 69
MCM68B364L	MOTA	60 - 70
MCM68B364P	MOTA	60 - 71
MCM68L732C	MOTA	60 - 19
MCM68L732L	MOTA	60 - 20
MCM68L764-35C	MOTA	60 - 92
MCM68L764-35L	MOTA	60 - 93
MCM2114-20L	MOTA	34 - 22
MCM2114-20P	MOTA	34 - 23
MCM2114-25L	MOTA	34 - 71
MCM2114-25P	MOTA	34 - 72
MCM2114-30L	MOTA	35 - 12
MCM2114-30P	MOTA	35 - 13
MCM2114-45L	MOTA	35 - 87
MCM2114-45P	MOTA	35 - 88
MCM2114C20	MOTA	34 - 24
MCM2114C25	MOTA	34 - 73
MCM2114C30	MOTA	35 - 14
MCM2114C45	MOTA	35 - 89
MCM2114L	MOTA	35 - 90
MCM2114P20	MOTA	34 - 25
MCM2114P25	MOTA	34 - 74
MCM2114P30	MOTA	35 - 15
MCM2114P45	MOTA	35 - 91
MCM2114P	MOTA	35 - 92
MCM2115AC-45	MOTA	30-102
MCM2115AC-55	MOTA	30-104
MCM2115AC-70	MOTA	31 - 4
MCM2115AL	MOTA	30 - 86
MCM2125AC-45	MOTA	30-103
MCM2125AC-55	MOTA	30-105
MCM2125AC-70	MOTA	31 - 5
MCM2125AL	MOTA	30 - 87
MCM2147C55	MOTA	40 - 55
MCM2147C70	MOTA	40 - 68
MCM2147C85	MOTA	40 - 82
MCM2147C100	MOTA	40 - 87
MCM2147P55	MOTA	40 - 56
MCM2147P70	MOTA	40 - 69
MCM2147P85	MOTA	40 - 83
MCM2147P100	MOTA	40 - 88
MCM2532C	MOTA	60 - 21
MCM2532L	MOTA	60 - 22
MCM2708C	MOTA	56 - 24
MCM2708L	MOTA	56 - 25
MCM2716C	MOTA	59 - 5
MCM2716L	MOTA	59 - 6
MCM4027AC1	MOTA	38 - 56
MCM4027AC2	MOTA	38 - 72
MCM4027AC3	MOTA	38-100
MCM4027AC4	MOTA	39 - 21
MCM4027C2	MOTA	38 - 73
MCM4027C3	MOTA	38-101
MCM4027C4	MOTA	39 - 22
MCM4027L2	MOTA	38 - 74
MCM4027L3	MOTA	38-102
MCM4027L4	MOTA	39 - 23
MCM4027P3	MOTA	38-103
MCM4027P4	MOTA	39 - 24
MCM4064L	MOTA	20 - 69
MCM4096C6	MOTA	39 - 25
MCM4096C11	MOTA	39 - 54
MCM4096C16	MOTA	39 - 43
MCM4096L6	MOTA	39 - 26
MCM4096L11	MOTA	39 - 55
MCM4096L16	MOTA	39 - 44
MCM4116AC15	MOTA	44 - 85
MCM4116AC20	MOTA	44 - 93
MCM4116AC25	MOTA	44-103
MCM4116AC30	MOTA	45 - 2
MCM4116AL15	MOTA	44 - 86
MCM4116AL20	MOTA	44 - 94
MCM4116AL25	MOTA	44-104
MCM4116AL30	MOTA	45 - 3
MCM4116BC-20	MOTA	44 - 95
MCM4116BC-25	MOTA	45 - 9
MCM4116BC-30	MOTA	45 - 4
MCM4116BP-15	MOTA	44 - 87
MCM4116C15	MOTA	44 - 88
MCM4116C20	MOTA	44 - 96
MCM4116C25	MOTA	44-105
MCM4116C30	MOTA	45 - 5
MCM4116L15	MOTA	44 - 89
MCM4116L20	MOTA	44 - 97
MCM4116L25	MOTA	44-106
MCM4116L30	MOTA	45 - 6
MCM4117L15	MOTA	43 - 85
MCM4117L20	MOTA	44 - 12

Δ-Registered with JEDEC by this manufacturer

1. TYPE No. CROSS INDEX

IN TYPE NUMBER SEQUENCE

TYPE No.	MFRS	Pg&Line
MCM4117L25	MOTA	44 - 53
MCM4117L30	MOTA	44 - 76
MCM4364L	MOTA	20 - 70
MCM4516C	MOTA	43 - 60
MCM4516L	MOTA	43 - 61
MCM4517-10C	MOTA	43 - 52
MCM4517-10P	MOTA	43 - 53
MCM4517-12C	MOTA	43 - 62
MCM4517-12P	MOTA	43 - 63
MCM4517-15C	MOTA	43 - 86
MCM4517-15P	MOTA	43 - 87
MCM5003AL	MOTA	47 - 16
MCM5003L	MOTA	47 - 17
MCM5004AL	MOTA	47 - 18
MCM5004L	MOTA	47 - 19
MCM5303AL	MOTA	47 - 20
MCM5303L	MOTA	47 - 21
MCM5304AL	MOTA	47 - 22
MCM5304L	MOTA	47 - 23
MCM6508C-25	MOTA	29 - 22
MCM6508C-30	MOTA	29 - 24
MCM6508C-46	MOTA	29 - 28
MCM6508P-25	MOTA	29 - 23
MCM6508P-30	MOTA	29 - 27
MCM6508P-46	MOTA	29 - 29
MCM6518C-25	MOTA	29 - 20
MCM6518C-30	MOTA	29 - 25
MCM6518P-25	MOTA	29 - 21
MCM6518P-30	MOTA	29 - 26
MCM6518P-46	MOTA	29 - 30
MCM6560L# 1	MOTA	54 -100
MCM6560L# 2	MOTA	56 - 95
MCM6560P# 1	MOTA	54 -101
MCM6560P# 2	MOTA	56 - 96
MCM6561L# 1	MOTA	64 - 61
MCM6561L# 2	MOTA	64 - 17
MCM6561L# 3	MOTA	64 - 82
MCM6561L# 4	MOTA	64 - 34
MCM6561L# 5	MOTA	64 - 46
MCM6561L# 6	MOTA	64 - 4
MCM6561P# 1	MOTA	64 - 62
MCM6561P# 2	MOTA	64 - 18
MCM6561P# 3	MOTA	64 - 83
MCM6561P# 4	MOTA	64 - 35
MCM6561P# 5	MOTA	64 - 47
MCM6561P# 6	MOTA	64 - 5
MCM6562L# 1	MOTA	64 - 63
MCM6562L# 2	MOTA	64 - 19
MCM6562L# 3	MOTA	64 - 84
MCM6562L# 4	MOTA	64 - 36
MCM6562L# 5	MOTA	64 - 48
MCM6562L# 6	MOTA	64 - 6
MCM6562P# 1	MOTA	64 - 64
MCM6562P# 2	MOTA	64 - 20
MCM6562P# 3	MOTA	64 - 85
MCM6562P# 4	MOTA	64 - 37
MCM6562P# 5	MOTA	64 - 49
MCM6562P# 6	MOTA	64 - 7
MCM6580L	MOTA	63 - 15
MCM6580P	MOTA	63 - 16
MCM6581L	MOTA	62 - 40
MCM6581P	MOTA	62 - 41
MCM6583L	MOTA	62 - 42
MCM6583P	MOTA	62 - 43
MCM6590L	MOTA	58 - 38
MCM6591L# 1	MOTA	64 - 21
MCM6591L# 2	MOTA	64 - 65
MCM6591L# 3	MOTA	64 - 9
MCM6591L# 4	MOTA	64 - 38
MCM6591L# 5	MOTA	64 - 44
MCM6591L# 6	MOTA	64 - 80
MCM6604AC2	MOTA	39 - 27
MCM6604AC4	MOTA	39 - 45
MCM6604AC	MOTA	39 - 56
MCM6604AL2	MOTA	39 - 28
MCM6604AL4	MOTA	39 - 46
MCM6604AL	MOTA	39 - 57
MCM6604L2	MOTA	38 - 49
MCM6604L4	MOTA	38 - 50
MCM6604L	MOTA	38 - 51
MCM6604P2	MOTA	38 - 52
MCM6604P4	MOTA	38 - 53
MCM6604P	MOTA	38 - 54
MCM6605AL1	MOTA	38 - 75
MCM6605AL2	MOTA	38 -104
MCM6605AL	MOTA	39 - 47
MCM6605AP1	MOTA	38 - 76
MCM6605AP2	MOTA	38 -105
MCM6605AP	MOTA	39 - 48
MCM6616L3	MOTA	43 - 41
MCM6616L4	MOTA	43 - 42
MCM6616L5	MOTA	43 - 43
MCM6616L20	MOTA	44 - 98
MCM6616L25	MOTA	44 -107
MCM6616L30	MOTA	45 - 7
MCM6616P3	MOTA	43 - 44
MCM6616P4	MOTA	43 - 45
MCM6616P5	MOTA	43 - 46
MCM6616P20	MOTA	44 - 99
MCM6616P25	MOTA	44 -108
MCM6616P30	MOTA	45 - 8
MCM6630L15	MOTA	45 - 14
MCM6630L20	MOTA	45 - 18
MCM6631L15	MOTA	45 - 15
MCM6631L20	MOTA	45 - 19
MCM6633L15	MOTA	45 - 16
MCM6633L20	MOTA	45 - 20
MCM6641-20C	MOTA	41 - 8
MCM6641-20JL	MOTA	41 - 9
MCM6641-20NL	MOTA	41 - 10
MCM6641-20P	MOTA	41 - 11
MCM6641-25C	MOTA	41 - 34
MCM6641-25JL	MOTA	41 - 35
MCM6641-25NL	MOTA	41 - 36
MCM6641-25P	MOTA	41 - 37
MCM6641-30C	MOTA	41 - 58
MCM6641-30JL	MOTA	41 - 59
MCM6641-30NL	MOTA	41 - 60
MCM6641-30P	MOTA	41 - 61
MCM6641-45C	MOTA	41 - 91
MCM6641-45JL	MOTA	41 - 92
MCM6641-45NL	MOTA	41 - 93
MCM6641-45P	MOTA	41 - 94
MCM6664-15C	MOTA	45 - 29
MCM6664-15L	MOTA	45 - 30
MCM6664-20C	MOTA	45 - 31
MCM6664-20L	MOTA	45 - 32
MCM6665-15L	MOTA	45 - 38
MCM6665-20L	MOTA	45 - 48
MCM6665L25-5L		45 - 54
	MOTA	
MCM6670L	MOTA	63 - 22
MCM6670P	MOTA	63 - 23
MCM6674L	MOTA	62 - 59
MCM6674P	MOTA	62 - 60
MCM6810ACL1	MOTA	22 - 5
MCM6810ACL	MOTA	22 - 6
MCM6810AL1	MOTA	22 - 7
MCM6810AL	MOTA	22 - 8
MCM6810AP1	MOTA	22 - 9
MCM6810AP	MOTA	22 - 10
MCM6810BJCS	MOTA	22 - 33
MCM6810CJCS	MOTA	22 - 11
MCM6810CL	MOTA	22 - 34
MCM6810CP	MOTA	22 - 35
MCM6810L	MOTA	22 - 36
MCM6810P	MOTA	22 - 37
MCM6830AL	MOTA	54 - 95
MCM6832C	MOTA	58 - 32
MCM6832P	MOTA	58 - 33
MCM7620DC	MOTA	50 - 48
MCM7620DM	MOTA	50 - 70
MCM7620LDC	MOTA	50 - 13
MCM7620LDM	MOTA	50 - 15
MCM7621DC	MOTA	50 - 49
MCM7621DM	MOTA	50 - 71
MCM7621LDC	MOTA	50 - 14
MCM7621LDM	MOTA	50 - 16
MCM7640D	MOTA	52 - 43
MCM7640DC	MOTA	52 - 44
MCM7640DM	MOTA	52 - 60
MCM7640L	MOTA	51 - 99
MCM7640P	MOTA	51 -100
MCM7641D	MOTA	52 - 45
MCM7641DC	MOTA	52 - 46
MCM7641DM	MOTA	52 - 61
MCM7641L	MOTA	51 -101
MCM7641P	MOTA	51 -102
MCM7642D	MOTA	53 - 63
MCM7642DC	MOTA	53 - 64
MCM7642DM	MOTA	53 - 77
MCM7642L	MOTA	53 - 36
MCM7642P	MOTA	53 - 37
MCM7643D	MOTA	53 - 65
MCM7643DC	MOTA	53 - 66
MCM7643DM	MOTA	53 - 78
MCM7643L	MOTA	53 - 38
MCM7643P	MOTA	53 - 39
MCM7660L	MOTA	55 - 9
MCM7660P	MOTA	55 - 10
MCM7661L	MOTA	55 - 11
MCM7680CDC	MOTA	54 - 21
MCM7680CDM	MOTA	54 - 22
MCM7680DC	MOTA	55 - 46
MCM7680DCL	MOTA	54 - 41
MCM7680DM	MOTA	55 - 57
MCM7680DML	MOTA	54 - 49
MCM7680LDC	MOTA	55 - 83
MCM7680LDM	MOTA	55 - 91
MCM7681CDC	MOTA	54 - 23
MCM7681CDM	MOTA	54 - 24
MCM7681DC	MOTA	55 - 47
MCM7681DCL	MOTA	54 - 42
MCM7681DM	MOTA	55 - 58
MCM7681DML	MOTA	54 - 50
MCM7681LDC	MOTA	55 - 84
MCM7681LDM	MOTA	55 - 92
MCM7684DC	MOTA	58 - 65
MCM7684DM	MOTA	58 - 81
MCM7685DC	MOTA	58 - 66
MCM7685DM	MOTA	58 - 82
MCM10139F	MOTA	46 - 35
MCM10139L	MOTA	46 - 36
MCM10143L	MOTA	18 - 95
MCM10144F	MOTA	22 - 54
MCM10144L	MOTA	22 - 55
MCM10145F	MOTA	19 - 61
MCM10145L	MOTA	19 - 62
MCM10146F	MOTA	28 - 22
MCM10146L	MOTA	28 - 23
MCM10147F	MOTA	21 - 99
MCM10147L	MOTA	21 -100
MCM10148AL	MOTA	21 - 36
MCM10148F	MOTA	21 - 26
MCM10148L	MOTA	21 - 27
MCM10149F	MOTA	47 -107
MCM10149L	MOTA	47 -108
MCM10152F	MOTA	22 - 51
MCM10152L	MOTA	22 - 52
MCM10539F	MOTA	46 - 37
MCM10539L	MOTA	46 - 38
MCM10544F	MOTA	22 - 56
MCM10544L	MOTA	22 - 57
MCM10545F	MOTA	19 - 63
MCM10545L	MOTA	19 - 64
MCM10546F	MOTA	28 - 31
MCM10546L	MOTA	28 - 32
MCM10547F	MOTA	21 - 96
MCM10547L	MOTA	21 - 97
MCM10548F	MOTA	21 - 21
MCM10548L	MOTA	21 - 22
MCM10549F	MOTA	48 - 1
MCM10549L	MOTA	48 - 2
MCM10552F	MOTA	22 - 40
MCM10552L	MOTA	22 - 41
MCM14505BAL	MOTA	21 - 43
MCM14505BCL	MOTA	21 - 44
MCM14505BCP	MOTA	21 - 45
MCM14524AL	MOTA	47 - 89
MCM14524CL	MOTA	47 - 90
MCM14524CP	MOTA	47 - 91
MCM14537AL	MOTA	23 -109
MCM14537CL	MOTA	23 -110
MCM14552AL	MOTA	21 - 51
MCM14552CL	MOTA	21 - 52
MCM14552CP	MOTA	21 - 53
MCM65308L	MOTA	54 - 89
MCM65308P	MOTA	54 - 90
MCM65317L	MOTA	58 - 13
MCM65317P	MOTA	58 - 14
MCM66700C	MOTA	63 - 27
MCM66700P	MOTA	63 - 28
MCM66710C	MOTA	62 - 71
MCM66710P	MOTA	62 - 72
MCM66714C	MOTA	62 - 73
MCM66714P	MOTA	62 - 74
MCM66720C	MOTA	62 - 75
MCM66720P	MOTA	62 - 76
MCM66730C	MOTA	62 - 77
MCM66730P	MOTA	62 - 78
MCM66734C	MOTA	62 - 79
MCM66734L	MOTA	63 - 45
MCM66734P	MOTA	62 - 80
MCM66740C	MOTA	62 - 81
MCM66740P	MOTA	62 - 82
MCM66750C	MOTA	62 - 83
MCM66750P	MOTA	62 - 84
MCM66751C	MOTA	62 - 85
MCM66751P	MOTA	62 - 86
MCM66760C	MOTA	62 - 87
MCM66760P	MOTA	62 - 88
MCM66770C	MOTA	62 - 89
MCM66770P	MOTA	62 - 90
MCM66780C	MOTA	62 - 91
MCM66780P	MOTA	62 - 92
MCM66790C	MOTA	62 - 93
MCM66790P	MOTA	62 - 94
MCM68308L	MOTA	54 - 96
MCM68308P	MOTA	54 - 97
MCM68316EL	MOTA	58 - 15
MCM68316EP	MOTA	58 - 16
MCM68317L	MOTA	58 - 43
MCM68317P	MOTA	58 - 44
MCM68332L	MOTA	59 - 71
MCM68332P	MOTA	59 - 72
MCM68708C	MOTA	56 - 26
MCM68708L	MOTA	56 - 27
MCM68732C0	MOTA	60 - 23
MCM68732C1	MOTA	60 - 24
MCM68732C	MOTA	60 - 25
MCM68732L1	MOTA	60 - 26
MCM68732L	MOTA	60 - 27
MCM68764C	MOTA	61 - 16
MCM68764L	MOTA	61 - 17
MCM82707L	MOTA	55 - 77
MCM82707P	MOTA	55 - 78
MCM82708L	MOTA	55 - 79
MCM82708P	MOTA	55 - 80
MCM93412DC	MOTA	24 - 15
MCM93412DM	MOTA	24 - 16
MCM93412FM	MOTA	24 - 17
MCM93412PC	MOTA	24 - 18
MCM93415DC	MOTA	28 - 97
MCM93415DM	MOTA	29 - 4
MCM93415FM	MOTA	29 - 5
MCM93415PC	MOTA	28 - 98
MCM93422DC	MOTA	24 - 19
MCM93422PC	MOTA	24 - 20
MCM93425DC	MOTA	28 - 99
MCM93425DM	MOTA	29 - 6
MCM93425FM	MOTA	29 - 7
MCM93425PC	MOTA	28 -100
MCM145101-1L	MOTA	25 - 36
MCM145101-1P	MOTA	25 - 37
MCM145101-3L	MOTA	25 - 45
MCM145101-3P	MOTA	25 - 46
MCM145101-8L	MOTA	25 - 54
MCM145101-8P	MOTA	25 - 55
MCM145101L	MOTA	25 - 47
MCM145101P	MOTA	25 - 48
MCM146504	MOTA	40 - 38
MCM146508-1L	MOTA	29 - 89
MCM146508-1P	MOTA	29 - 90
MCM146508-2L	MOTA	29 - 91
MCM146508L	MOTA	30 - 12
MCM146508P	MOTA	30 - 13
MCM146514L	MOTA	33 - 50
MCM146514P	MOTA	33 - 51
MCM146518-1L	MOTA	29 - 92
MCM146518-1P	MOTA	29 - 93
MCM146518-2L	MOTA	29 - 94
MCM146518L	MOTA	30 - 14
MCM146518P	MOTA	30 - 15
MCS2027	MTY	62 - 31
MCS2114-30	MTY	35 - 16
MCS2114-35	MTY	35 - 58
MCS2114-45	MTY	35 - 93
MCS2114L-30	MTY	35 - 17
MCS2114L-35	MTY	35 - 59
MCS2114L-45	MTY	35 - 94
MCS2316	MTY	58 - 41
MCS2332	MTY	60 - 6
MCT2114-45	MTY	35 - 95
MCT2114L-45	MTY	35 - 96
MD21SC14AE10	MITC	33 - 55
MD21SC14AE15	MITC	33 - 56
MD21SC14AE25	MITC	33 - 57
MD23SC16AE	MITC	57 - 89
MD2114	ITL	35 - 97
MD2114A4	ITL	34 - 26
MD2114A5	ITL	34 - 75
MD2114L2	INL	32 - 94
MD2114L3	INL	32 - 96
MD2114L4	ITL	34 - 27
MD2114L5	ITL	34 - 76
MD2114L	INL	32 -100
MD2115A	ITL	30 -106
MD2115AL	ITL	31 - 6
MD2118-4	ITL	43 - 64
MD2118-7	ITL	43 - 88
MD2125A	ITL	30 -107
MD2125AL	ITL	31 - 7
MD2147	INL	43 - 3
	ITL	
MD2147H3	ITL	40 - 57
MD2147H	ITL	40 - 70
MD2148H	ITL	33 - 79
MD2708	ITL	56 - 28
MD2716	ITL	58 -101
MD3636	ITL	58 - 79
MD4330BC	MITC	83 -102
MD4330BD	MITC	83 - 97
MD4330BE	MITC	83 - 98
MD4331BE	MITC	83 - 99
MD4332BC	MITC	83 -104
MD4332BD	MITC	83 -105
MD4332BE	MITC	83 -106
MEM-1B	WLD	27 - 90
MEM-2	WLD	27 - 91
MEM-3	WLD	38 - 24
MEM-6	WLD	27 - 92
MGF8	WLD	76 - 95
MK1002L	AMD	85 - 26
MK1002P	AMD	85 - 27
MK2141J-2	MOS	38 - 20
MK2141J-3	MOS	38 - 22
MK2141N-2	MOS	38 - 21
MK2141N-3	MOS	38 - 23
MK2147J-55	MOS	40 - 46
MK2147J-70	MOS	40 - 47
MK2147J-85	MOS	38 - 27
MK2147J-90	MOS	40 - 48
MK2147N-55	MOS	38 - 25
MK2147N-70	MOS	38 - 26
MK2147N-85	MOS	38 - 28
MK2716J-5	MOS	58 -103
MK2716J-6	MOS	58 -108
MK2716J-7	MOS	59 - 16
MK2716J-8	MOS	59 - 7
MK2716T-5	MOS	58 -104
MK2716T-6	MOS	58 -109
MK2716T-7	MOS	59 - 1
MK2716T-8	MOS	59 - 8
MK2764J-8	MOS	60 - 94
MK2764T-8	MOS	60 - 95
MK4027J-1	MOS	38 - 57
MK4027J-2	MOS	38 - 77
MK4027J-3	MOS	38 -106
MK4027N-1	MOS	38 - 58
MK4027N-2	MOS	38 - 78
MK4027N-3	MOS	38 -107
MK4027N-4	MOS	39 - 29
MK4027P-1	MOS	38 - 59
MK4027P-2	MOS	38 - 79
MK4027P-3	MOS	38 -108
MK4104J-3	MOS	41 - 12
MK4104J-4	MOS	41 - 38
MK4104J-5	MOS	41 - 62
MK4104J-6	MOS	41 - 75
MK4104J-33	MOS	41 - 13
MK4104J-34	MOS	41 - 39
MK4104J-35	MOS	41 - 63
MK4104N-3	MOS	41 - 14
MK4104N-4	MOS	41 - 40
MK4104N-5	MOS	41 - 64
MK4104N-6	MOS	41 - 76
MK4104N-33	MOS	41 - 15
MK4104N-34	MOS	41 - 41
MK4104N-35	MOS	41 - 65
MK4104P-3	MOS	41 - 16
MK4104P-4	MOS	41 - 42
MK4104P-5	MOS	41 - 66
MK4104P-6	MOS	41 - 77
MK4104P-33	MOS	41 - 17
MK4104P-34	MOS	41 - 43
MK4104P-35	MOS	41 - 67
MK4116E-2	MOS	43 - 89
MK4116E-3	MOS	44 - 13
MK4116N-2	MOS	43 - 90
MK4116N-3	MOS	44 - 14
MK4116N-4	MOS	44 - 54
MK4116P-2	MOS	43 - 91
MK4116P-3	MOS	44 - 15
MK4116P-4	MOS	44 - 55
MK4118AJ-1	MOS	27 - 93
MK4118AJ-2	MOS	27 - 96
MK4118AJ-3	MOS	27 - 99
MK4118AJ-4	MOS	27 -102
MK4118AN-1	MOS	27 - 94
MK4118AN-2	MOS	27 - 97
MK4118AN-3	MOS	27 -100
MK4118AN-4	MOS	27 -103
MK4118AP-1	MOS	27 - 95
MK4118AP-2	MOS	27 - 98
MK4118AP-3	MOS	27 -101
MK4118AP-4	MOS	27 -104
MK4147J-55	MOS	38 - 19
MK4147J-70	MOS	40 - 71
MK4147J-85	MOS	40 - 84
MK4147N-55	MOS	40 - 58
MK4147N-70	MOS	40 - 72
MK4147N-85	MOS	40 - 85
MK4164E-12	MOS	45 - 24
MK4164E-15	MOS	45 - 25
MK4164J-12	MOS	45 - 27
MK4164N-12	MOS	45 - 28
MK4164N-15	MOS	45 - 26
MK4332D-3	MOS	45 - 21
MK4516E-12	MOS	43 - 36
MK4516E-15	MOS	43 - 37
MK4516E-20	MOS	44 - 16
MK4516J-12	MOS	43 - 39
MK4516N-12	MOS	43 - 40
MK4516N-15	MOS	43 - 38
MK4516N-20	MOS	44 - 17
MK4528D-20	MOS	45 - 57
MK4801AJ-55	MOS	37 - 56
MK4801AJ-70	MOS	37 - 57
MK4801AJ-90	MOS	37 - 59
MK4801AN-55	MOS	37 - 62
MK4801AN-70	MOS	37 - 58
MK4801AN-90	MOS	37 - 60
MK4801AP-70	MOS	37 - 63
MK4802J-1	MOS	38 - 4
MK4802J-3	MOS	37 -106
MK4802J-70	MOS	37 -100
MK4802J-90	MOS	37 -102
MK4802N-1	MOS	37 -104
MK4802N-3	MOS	38 - 14
MK4802N-70	MOS	37 -101
MK4802N-90	MOS	37 -103
MK4802P-1	MOS	38 - 5
MK4802P-3	MOS	38 - 15
MK4802P-70	MOS	37 -109
MK4802P-90	MOS	37 -110
MK4808-5	MOS	37 - 55
MK4816J-3	MOS	37 - 95
MK4816J-4	MOS	37 - 96
MK4816J-5	MOS	37 - 98
MK4816N-4	MOS	37 - 97
MK4816N-5	MOS	37 - 99
MK34000J-3	MOS	59 - 31
MK34000N-3	MOS	57 -106
MK34000P-3	MOS	58 - 1
MK34073N-3	MOS	62 - 21
MK34073P-3	MOS	62 - 22
MK36000N-4	MOS	60 - 72
MK36000N-5	MOS	60 - 73
MK36000P-4	MOS	60 - 74
MK36000P-5	MOS	60 - 78
MK37000J-4	MOS	60 - 75
MK37000J-5	MOS	60 - 79
MK37000N-4	MOS	60 - 76
MK37000N-5	MOS	60 - 80
MK37000P-5	MOS	60 - 81
MKB4027F-84	MOS	39 - 30
MKB4027J-83	MOS	38 -109
MKB4027J-84	MOS	39 - 31
MKB4104E-85	MOS	41 - 68
MKB4104E-86	MOS	41 - 78
MKB4104J-85	MOS	41 - 69
MKB4104J-86	MOS	41 - 79
MKB4104P-85	MOS	41 - 70
MKB4104P-86	MOS	41 - 80
MKB4116E-84	MOS	44 - 56
MKB4116E-93	MOS	44 - 18
MKB4116F-84	MOS	44 - 57
MKB4116F-93	MOS	44 - 19
MKB4116J-83	MOS	44 - 20
MKB4116J-84	MOS	44 - 58
MKB4116J-93	MOS	44 - 21
MKB4116P-83	MOS	44 - 22
MKB4116P-84	MOS	44 - 59
MKB4116P-93	MOS	44 - 23
MKB4118J-82	MOS	37 - 64
MKB4118J-83	MOS	37 - 67
MKB4118P-82	MOS	37 - 65
MKB4118P-83	MOS	37 - 68
MKB36000P-80	MOS	60 - 56
MKB36000P-84	MOS	60 - 60
MM1-PROM	CLI	58 -102
MM1-RAM	CLI	33 - 61
MM54C89J	NSC	20 - 98
MM54C200J	NSC	23 - 81
MM54C910J	NSC	21 - 47
MM54C920J	NSC	24 -110
MM54C920N-3	NSC	24 -105
MM54C921J	NSC	25 - 1
MM54C929J	NSC	29 - 77
MM54C930J	NSC	29 - 78
MM54C989J	NSC	21 - 1
MM74C89J	NSC	20 - 99
MM74C89N	NSC	20 -100
MM74C200J	NSC	23 - 82
MM74C200N	NSC	23 - 83
MM74C910J	NSC	21 - 48
MM74C910N	NSC	21 - 49
MM74C920J	NSC	24 -106
MM74C920J-3	NSC	25 - 2
MM74C920N	NSC	24 -107
MM74C920N-3	NSC	25 - 3
MM74C921J	NSC	24 -108
MM74C921J-3	NSC	25 - 4
MM74C921N	NSC	24 -109
MM74C921N-3	NSC	25 - 5
MM74C929J	NSC	29 - 66
MM74C929J-3	NSC	29 -101

Δ-Registered with JEDEC by this manufacturer

1. TYPE No. CROSS INDEX

IN TYPE NUMBER SEQUENCE

TYPE No.	MFRS	Pg&Line
MM74C929N	NSC	29- 67
MM74C929N-3	NSC	29-102
MM74C930J	NSC	29- 68
MM74C930J-3	NSC	29-103
MM74C930N	NSC	29- 69
MM74C930N-3	NSC	29-104
MM74C989J	NSC	21- 2
MM74C989N	NSC	21- 3
MM1702AQ	NSC	49- 59
MM2102AJ	NSC	31- 81
MM2102AJ-2	NSC	31- 39
MM2102AJ-2L	NSC	31- 40
MM2102AJ-4	NSC	32- 20
MM2102AJ-4L	NSC	32- 21
MM2102AJ-6	NSC	32- 73
MM2102AJ-6L	NSC	32- 74
MM2102AJ-L	NSC	31- 82
MM2102AN	NSC	31- 83
MM2102AN-2	NSC	31- 41
MM2102AN-2L	NSC	31- 42
MM2102AN-4	NSC	32- 22
MM2102AN-4L	NSC	32- 23
MM2102AN-6	NSC	32- 75
MM2102AN-6L	NSC	32- 76
MM2102AN-L	NSC	31- 84
MM2114J	NSC	35- 98
MM2114J-2	NSC	34- 28
MM2114J-2L	NSC	34- 29
MM2114J-3	NSC	35- 18
MM2114J-3L	NSC	35- 19
MM2114J-L	NSC	35- 99
MM2114N	NSC	35-100
MM2114N-2	NSC	34- 30
MM2114N-2L	NSC	34- 31
MM2114N-3	NSC	35- 20
MM2114N-3L	NSC	35- 21
MM2114N-L	NSC	35-101
MM2147J	NSC	40- 73
MM2147J-3	NSC	40- 59
MM2147J-L	NSC	40- 74
MM2147N	NSC	40- 75
MM2147N-3	NSC	40- 60
MM2147N-L	NSC	40- 76
MM2316ED	NSC	58- 7
MM2316EN	NSC	58- 8
MM2708Q	NSC	56- 29
MM2708Q-1	NSC	56- 10
MM2716Q-1	NSC	58-110
MM2716Q-2	NSC	59- 2
MM2716QE	NSC	59- 9
MM2716QM	NSC	59- 10
MM2758Q-A	NSC	56- 30
MM2758Q-B	NSC	56- 31
MM3200-2C	STX	60- 1
MM3200-3C	STX	60- 5
MM3200-C	STX	59-107
MM4055D	AMD	85- 38
MM4056H	AMD	85- 74
MM4057D	AMD	85- 86
MM4203Q	NSC	49- 61
MM4204Q	NSC	52-102
MM4214J	NSC	51- 93
MM4220AEJ	NSC	64- 31
MM4220DFJ	NSC	88- 16
MM4221RQJ#1	NSC	64- 40
MM4221RQJ#2	NSC	64-100
MM4221RRJ	NSC	64- 3
MM4221TMJ	NSC	64- 42
MM4230BO1J	NSC	64- 86
MM4230BOJ	NSC	64- 89
MM4230KP2J	NSC	64- 23
MM4230KPJ	NSC	64- 27
MM4231RP2J	NSC	64- 50
MM4231RPJ	NSC	64- 54
MM4240AAJ	NSC	63- 37
MM4240ABUJ	NSC	63- 38
MM4240ABZJ	NSC	63- 33
MM4240AEJ	NSC	63- 34
MM4241ABLJ	NSC	63- 10
MM4280J	NSC	39- 34
MM5055D	AMD	85- 39
MM5055N	AMD	85- 40
MM5056H	AMD	85- 75
MM5057D	AMD	85- 87
MM5057N	AMD	85- 88
MM5203Q	NSC	49- 62
MM5204Q	NSC	52-101
MM5204Q-1	NSC	52-100
MM5214J	NSC	51- 94
MM5214N	NSC	51- 95
MM5220AEJ	NSC	64- 32
MM5220AEN	NSC	64- 33
MM5220DFJ	NSC	88- 17
MM5220DFN	NSC	88- 18
MM5221RQJ#1	NSC	64- 41
MM5221RQJ#2	NSC	64-101
MM5221TMJ	NSC	64- 43
MM5221TMN	NSC	64-102
MM5230BO1J	NSC	64- 87
MM5230BO1N	NSC	64- 88
MM5230BOJ	NSC	64- 90
MM5230BON	NSC	64- 91
MM5230J#1	NSC	49- 26
MM5230KP2J	NSC	64- 24
MM5230KP2N	NSC	64- 25
MM5230KPN	NSC	64- 28
MM5230N	NSC	49- 27
MM5230N#1	NSC	49- 28
MM5231RP2J	NSC	64- 51
MM5231RP2N	NSC	64- 52
MM5231RPJ	NSC	64- 55
MM5231RPN	NSC	64- 56
MM5240AAJ	NSC	63- 39
MM5240ABUJ	NSC	63- 40
MM5240ABZN	NSC	63- 35
MM5240AEN	NSC	63- 36
MM5241ABLJ	NSC	63- 11
MM5241ABLN	NSC	63- 12
MM5257J	NSC	41- 95
MM5257J-2	NSC	41- 18
MM5257J-2L	NSC	41- 19
MM5257J-3	NSC	41- 71
MM5257J-3L	NSC	41- 72
MM5257J-6	NSC	41-101
MM5257J-6L	NSC	41-102
MM5257J-L	NSC	41- 96
MM5257N	NSC	41- 97
MM5257N-2	NSC	41- 20
MM5257N-2L	NSC	41- 21
MM5257N-3	NSC	41- 73
MM5257N-3L	NSC	41- 74
MM5257N-6	NSC	41-103
MM5257N-6L	NSC	41-104
MM5257N-L	NSC	41- 98
MM5280J	NSC	38-110
MM5280J-5	NSC	38- 40
MM5280N	NSC	39- 1
MM5280N-5	NSC	38- 41
MM5290J-2	NSC	43- 92
MM5290J-3	NSC	44- 24
MM5290J-4	NSC	44- 60
MM5290N-2	NSC	43- 93
MM5290N-3	NSC	44- 25
MM5290N-4	NSC	44- 61
MM5298AJ-2	NSC	43- 94
MM5298AJ-3	NSC	44- 26
MM5298AJ-4	NSC	44- 62
MM5298AN-2	NSC	43- 95
MM5298AN-3	NSC	44- 27
MM5298AN-4	NSC	44- 63
MM5298BJ-2	NSC	43- 96
MM5298BJ-3	NSC	44- 28
MM5298BJ-4	NSC	44- 64
MM5298BN-2	NSC	43- 97
MM5298BN-3	NSC	44- 29
MM5298BN-4	NSC	44- 65
MM52116D	NSC	58- 9
MM52116FDWD	NSC	63- 24
MM52116FDWN	NSC	63- 25
MM52116FDXD	NSC	63- 29
MM52116FDXN	NSC	63- 30
MM52116N	NSC	58- 10
MM52132D	NSC	59- 62
MM52132N	NSC	59- 63
MM52164D	NSC	60- 85
MM52164N	NSC	60- 86
MN1203	MATJ	21- 50
MN1208	MATJ	46- 11
MN2114	MATJ	35-102
MN2332	MATJ	59- 49
MN2716	MATJ	58- 46
MN4116	MATJ	44- 30
MN5101	MATJ	25- 56
MPS2114-30	MTY	35- 22
MPS2114-35	MTY	35- 60
MPS2114-45	MTY	35-103
MPS2114-50	MTY	36- 20
MPS2114L-30	MTY	35- 23
MPS2114L-35	MTY	35- 61
MPS2114L-45	MTY	35-104
MPS2316	MTY	58- 42
MPS2332	MTY	60- 7
MPT2114-45	MTY	35-105
MPT2114L-45	MTY	35-106
MS109	ECV	46- 2
MS113	ECV	46- 3
MS115	ECV	46- 8
MS116	ECV	46- 4
MS204	ECV	46- 6
MS208	ECV	46- 5
MS612	RTC	84- 66
MS618	RTC	83- 94
MS625	RTC	85- 23
MS4331BC	MITC	83-100
MS4331BD	MITC	83-101
MSL8520A	OKIJ	48- 84
MSL8521A	OKIJ	48- 85
MSL9650A	OKIJ	62- 8
MSL9650AS	OKIJ	63- 60
MSL9652A	OKIJ	63- 61
MSL9660AS	OKIJ	63- 59
MSL9661AS	OKIJ	62-104
MSL9662RS	OKIJ	62-105
MSL9663RS	OKIJ	62-106
MSL9664RS	OKIJ	62-107
MSL9665RS	OKIJ	62-108
MSM575	OKIJ	51- 88
MSM575-01	OKIJ	62- 28
MSM575-01A	OKIJ	62- 29
MSM575-02	OKIJ	62- 30
MSM575A	OKIJ	51- 13
MSM2114	OKIJ	35-107
MSM2114-2RS	OKIJ	34- 32
MSM2114-3RS	OKIJ	35- 24
MSM2114L	OKIJ	35-108
MSM2114L-2	OKIJ	34- 33
MSM2114L-3	OKIJ	35- 25
MSM2128	OKIJ	38- 16
MSM2128-1	OKIJ	38- 17
MSM2716AS	OKIJ	59- 17
MSM3716-2AS	OKIJ	43- 98
MSM3716-3AS	OKIJ	44- 31
MSM3716-4AS	OKIJ	44- 66
MSM3741-1A	OKIJ	39- 72
MSM3741-2A	OKIJ	39- 75
MSM3741A	OKIJ	39- 69
MSM3750-6A	OKIJ	32- 90
MSM3750-8A	OKIJ	32- 91
MSM3758A	OKIJ	56- 46
MSM3758AS	OKIJ	56- 40
MSM3761AS	OKIJ	63- 62
MSM3770A	OKIJ	54-109
MSM3780	OKIJ	57- 76
MSM3781AS	OKIJ	58- 20
MSM5104-2	OKIJ	42-103
MSM5104-3	OKIJ	42-104
MSM5114-2AS	OKIJ	34- 34
MSM5114-2RS	OKIJ	34- 35
MSM5114-3AS	OKIJ	35- 26
MSM5114-3RS	OKIJ	35- 27
MSM5115-2	OKIJ	36-101
MSM5115-3	OKIJ	36-102
MSR4	WLD	66- 34
MSR8	WLD	73- 66
MUF5	WLD	75- 70
MWS5101ADL3	RCA	25- 63
MWS5101AEL2	RCA	25- 61
MWS5101AEL3	RCA	25- 64
MWS5101DL3	RCA	25- 65
MWS5101EL2	RCA	25- 62
MWS5101EL3	RCA	25- 66
MWS5114D	RCA	33- 38
MWS5114E	RCA	33- 39
N8X350F	PHIN	27- 69
N25L01B	PHIN	24- 6
N25L01I	PHIN	24- 7
N74LS95BF	PHIN	69- 21
N74LS95BN	PHIN	69- 22
N74LS96F	PHIN	75- 6
N74LS96N	PHIN	75- 7
N74LS164F	PHIN	81- 66
N74LS164N	PHIN	81- 67
N74LS170B	MULB	18- 54
N74LS170F	MULB	18- 55
N74LS170N	PHIN	18- 25
N74LS174B	MULB	76- 56
N74LS174F	MULB	76- 57
N74LS174N	PHIN	76- 41
N74LS175B	MULB	71- 55
N74LS175F	MULB	71- 56
N74LS175N	PHIN	71-106
N74LS194AF	PHIN	69- 23
N74LS194AN	PHIN	69- 24
N74LS195AF	PHIN	70-100
N74LS195AN	PHIN	70-101
N74LS195BF	SIC	70-102
N74LS195BN	PHIN	70-103
N74LS273F	PHIN	78- 57
N74LS273N	PHIN	78- 58
N74LS289F	PHIN	19- 70
N74LS289N	PHIN	19- 71
N74LS295BF	SIC	70-102
N74LS295BN	PHIN	70-103
N74LS298F	PHIN	69- 25
N74LS298N	PHIN	69- 26
N74LS299F	PHIN	78-101
N74LS299N	PHIN	78-102
N74LS323F	PHIN	78-103
N74LS323N	PHIN	78-104
N74LS364F	PHIN	78-105
N74LS374F	PHIN	78-106
N74LS374N	PHIN	78-107
N74LS377F	PHIN	78- 59
N74LS377N	PHIN	78- 60
N74LS378F	PHIN	76- 42
N74LS378N	PHIN	76- 43
N74LS379F	PHIN	70-104
N74LS379N	PHIN	70-105
N74LS395AF	PHIN	70-106
N74LS395AN	PHIN	70-107
N74LS398F	PHIN	69- 27
N74LS398N	PHIN	69- 28
N74LS399F	PHIN	69- 29
N74LS399N	PHIN	69- 30
N74LS670B	MULB	18- 68
N74LS670F	MULB	18- 69
N74LS670N	PHIN	18- 26
N74S89F	MULB	20- 51
N74S89N	MULB	20- 52
N74S172F	MULB	18-102
N74S172N	MULB	18-103
N74S174F	PHIN	75- 95
N74S174N	PHIN	75- 96
N74S175F	PHIN	72- 51
N74S175N	PHIN	72- 52
N74S178A	MULB	72- 62
N74S178F	MULB	72- 63
N74S179B	MULB	72- 64
N74S179F	MULB	72- 65
N74S189F	PHIN	20- 28
N74S189N	PHIN	20- 29
N74S194B	MULB	72- 92
N74S194F	PHIN	72- 84
N74S194J	MULB	72- 93
N74S194N	PHIN	72- 85
N74S194W	MULB	72- 94
N74S195B	MULB	71- 57
N74S195F	PHIN	72- 86
N74S195J	MULB	71- 58
N74S195N	PHIN	72- 87
N74S195W	MULB	71- 59
N74S200B	MULB	23- 3
N74S200F	MULB	23- 4
N74S200I	MULB	23- 5
N74S200N	MULB	23- 6
N74S201B	MULB	23- 7
N74S206B	MULB	23- 18
N74S206I	MULB	23- 19
N74S273F	PHIN	79- 35
N74S273N	PHIN	79- 36
N74S301B	MULB	23- 8
N74S301F	MULB	23- 9
N74S301N	PHIN	23- 10
N82LS10F	MULB	28- 38
N82LS10N	MULB	28- 39
N82LS11F	MULB	28- 40
N82LS11N	MULB	28- 41
N82LS116F	MULB	23- 74
N82LS116N	MULB	23- 75
N82LS117F	MULB	23- 76
N82LS117N	MULB	23- 77
cont.next col.		
N82LS117N (cont.)	PHIN	
SIC	VALG	
N82LS181F	SIC	55- 75
N82LS181N	SIC	55- 76
N82S06I	MULB	23- 36
N82S07I	MULB	23- 37
N82S08I	PHIN	29- 19
N82S09AI	PHIN	21- 58
N82S09AN	PHIN	21- 59
N82S09I	MULB	21- 62
N82S09N	PHIN	21- 63
N82S10F	MULB	28- 42
N82S10I	MULB	28-101
N82S10N	MULB	28- 36
N82S11F	MULB	28- 43
N82S11I	MULB	28-102
N82S11N	MULB	28- 37
N82S12F	MULB	18-104
N82S12N	MULB	18-105
N82S16B	MULB	23- 11
N82S16F	MULB	22- 90
N82S16N	PHIN	22- 91
N82S17B	MULB	23- 12
N82S17F	MULB	22- 92
N82S17N	VALG	23- 13
N82S19F	SIC	21- 60
N82S19I	MULB	21- 57
N82S19N	SIC	21- 61
N82S21B	MULB	21- 8
N82S21F	MULB	21- 11
N82S21N	MULB	21- 12
N82S23B	MULB	46- 68
N82S23F	MULB	46- 69
N82S23N	MULB	46- 70
N82S25B	MULB	20- 53
N82S25F	MULB	20- 54
N82S25N	PHIN	20- 55
N82S26F	PHIN	47- 77
N82S27F	MULB	48- 51
N82S29F	MULB	47- 78
N82S70A	MULB	72- 66
N82S70F	MULB	72- 67
N82S70N	PHIN	72- 32
N82S71B	MULB	72- 68
N82S71F	MULB	72- 69
N82S71N	PHIN	72- 33
N82S100F	SIC	87- 98
N82S100I	MULB	87- 92
N82S100N	MULB	87- 93
N82S101F	SIC	87- 99
N82S101I	MULB	87- 94
N82S101N	MULB	87- 95
N82S102F	SIC	87- 43
N82S102I	MULB	87- 34
N82S102N	MULB	87- 35
N82S103F	SIC	87- 44
N82S103I	MULB	87- 36
N82S103N	MULB	87- 37
N82S104F	SIC	88- 4
N82S104N	SIC	87-100
N82S105F	SIC	88- 5

Δ-Registered with JEDEC by this manufacturer

1. TYPE No. CROSS INDEX

IN TYPE NUMBER SEQUENCE

TYPE No.	MFRS	Pg&Line
N82S105N	SIC	87-101
N82S106F	SIC	88- 14
N82S106I	MULB	47- 8
PHIN	SIC	88- 10
	VALG	
N82S106N	MULB	47- 9
PHIN	SIC	88- 11
N82S107F	SIC	88- 15
N82S107I	MULB	47- 10
PHIN	SIC	88- 12
	VALG	
N82S107N	MULB	88- 13
PHIN	SIC	
N82S110F	MULB	28- 83
PHIN	VALG	
N82S110N	MULB	28- 84
PHIN	VALG	
N82S111F	MULB	28- 85
PHIN	VALG	
N82S111N	MULB	28- 86
PHIN	VALG	
N82S114I	MULB	49- 34
	PHIN	
N82S115F	MULB	52- 20
PHIN	SIC	
	VALG	
N82S115I	MULB	52- 21
	PHIN	
N82S115N	MULB	52- 22
PHIN	SIC	
	VALG	
N82S116B	MULB	22- 93
N82S116F	MULB	22- 94
PHIN	VALG	
N82S116N	PHIN	22- 95
	VALG	
N82S117B	MULB	22- 96
N82S123B	MULB	46- 71
N82S123F	MULB	46- 72
PHIN	SIC	
	VALG	
N82S123N	MULB	46- 73
PHIN	SIC	
	VALG	
N82S126B	MULB	48- 52
N82S126F	MULB	48- 53
PHIN	SIC	
	VALG	
N82S126I	MULB	47- 79
	PHIN	
N82S126N	PHIN	48- 54
SIC	VALG	
N82S129B	MULB	48- 55
N82S129F	MULB	48- 56
PHIN	SIC	
	VALG	
N82S129I	MULB	47- 80
	PHIN	
N82S129N	PHIN	48- 57
SIC	VALG	
N82S130F	MULB	50- 72
PHIN	SIC	
	VALG	
N82S130N	PHIN	50- 73
SIC	VALG	
N82S131F	MULB	50- 74
PHIN	SIC	
	VALG	
N82S131N	PHIN	50- 25
SIC	VALG	
N82S136AF	MULB	53- 16
PHIN	VALG	
N82S136AN	MULB	53- 17
PHIN	VALG	
N82S136F	MULB	53- 25
PHIN	VALG	
N82S136N	MULB	53- 26
PHIN	VALG	
N82S137AF	MULB	53- 18
PHIN	SIC	
	VALG	
N82S137AN	MULB	53- 19
PHIN	SIC	
	VALG	
N82S137F	MULB	53- 58
PHIN	SIC	
	VALG	
N82S137N	MULB	53- 59
PHIN	SIC	
	VALG	
N82S140F	MULB	52- 70
PHIN	VALG	
N82S140N	MULB	52- 71
PHIN	VALG	
N82S141F	MULB	52- 72
PHIN	SIC	
	VALG	
N82S141N	MULB	52- 73
PHIN	SIC	
	VALG	
N82S146F	MULB	51-103
PHIN	VALG	
N82S147F	MULB	51-104
PHIN	SIC	
	VALG	
N82S180F	MULB	55- 85
PHIN	SIC	
	VALG	
N82S180N	MULB	55- 86
PHIN	SIC	
	VALG	
N82S181F	MULB	55- 87
PHIN	SIC	
	VALG	
N82S181N	MULB	55- 88
PHIN	SIC	
	VALG	
N82S182F	PHIN	55- 81
N82S182N	PHIN	55- 82
N82S183F	SIC	60- 65
N82S183N	SIC	60- 66
N82S184F	MULB	56- 92
	PHIN	
N82S184I	PHIN	57- 16
	VALG	
N82S185F	MULB	56- 93
	PHIN	
N82S185F#	SIC	56- 90
N82S185N#	SIC	56- 91
N82S190I	MULB	58- 93
PHIN	VALG	
N82S190N	MULB	58- 94
	PHIN	
N82S191I	MULB	58- 95
PHIN	SIC	
	VALG	
N82S191N	MULB	57- 77
PHIN	SIC	
N82S200I	MULB	46-110
PHIN	VALG	
N82S200N	MULB	47- 1
PHIN	VALG	
N82S201I	MULB	47- 2
PHIN	VALG	
N82S201N	MULB	47- 3
PHIN	VALG	
N82S210F	MULB	27- 83
PHIN	SIC	
N82S210N	MULB	27- 84
PHIN	SIC	
N82S212F	PHIN	27- 82
	SIC	
N82S214F	VALG	49- 11
N82S214I	MULB	49- 12
	PHIN	
N82S214N	VALG	49- 13
N82S215F	VALG	51- 49
N82S215I	MULB	51- 50
	PHIN	
N82S215N	VALG	51- 51
N82S226B	MULB	47- 81
N82S226F	MULB	47- 82
PHIN	VALG	
N82S226N	VALG	47- 70
N82S229B	MULB	47- 83
N82S229F	MULB	47- 84
PHIN	VALG	
N82S229N	VALG	47- 71
N82S230F	MULB	50- 1
PHIN	VALG	
N82S230N	VALG	49- 95
N82S231F	MULB	50- 2
PHIN	VALG	
N82S231N	VALG	49- 96
N82S240F	MULB	51- 63
PHIN	VALG	
N82S240N	MULB	51- 64
PHIN	VALG	
N82S241F	MULB	51- 65
PHIN	VALG	
N82S241N	MULB	51- 66
PHIN	VALG	
N82S280F	VALG	54- 43
N82S280I	MULB	54- 44
	PHIN	
N82S280N	VALG	54- 45
N82S281F	VALG	54- 46
N82S281I	MULB	54- 47
	PHIN	
N82S281N	VALG	54- 48
N82S290F	MULB	57- 78
PHIN	VALG	
N82S290N	MULB	57- 79
PHIN	VALG	
N82S291F	MULB	57- 80
PHIN	VALG	
N82S291N	MULB	57- 81
PHIN	VALG	
N82S400AI	MULB	39-102
PHIN	VALG	
N82S400I	MULB	39-103
PHIN	SIC	
	VALG	
N82S401AI	MULB	39-104
PHIN	VALG	
N82S401I	MULB	39-105
PHIN	SIC	
	VALG	
N82S2708F	MULB	55- 89
PHIN	VALG	
N82S2708N	MULB	55- 90
PHIN	VALG	
N93L415F	MULB	28-103
PHIN	SIC	
	VALG	
N93L415N	MULB	28-104
PHIN	SIC	
	VALG	
N93L425N	PHIN	28- 48
N2010K	MULB	85- 18
PHIN	SIC	
N2114-UMA	EMM	35- 28
N2114-UME	EMM	35- 29
N2410I	MULB	47- 92
PHIN	SIC	
N2411I	MULB	47- 93
PHIN	SIC	
N3101AB	MULB	20- 30
N3101AF	MULB	20- 31
PHIN	SIC	
	VALG	
N3101AN	PHIN	20- 32
SIC	VALG	
N7488B	MULB	46- 21
PHIN	SIC	
N7488W	MULB	46- 22
PHIN	SIC	
N7489B	MULB	20- 84
	PHIN	
N7491A	MULB	82- 37
PHIN	SIC	
N7491AF	PHIN	82- 38
SIC	VALG	
N7491AN	PHIN	82- 39
SIC	VALG	
N7491F	MULB	82- 40
PHIN	SIC	
N7494B	MULB	73- 34
PHIN	SIC	
N7494F	MULB	73- 35
PHIN	SIC	
	VALG	
N7494N	PHIN	66- 82
SIC	VALG	
N7495A	MULB	65- 98
PHIN	SIC	
N7495AF	PHIN	69- 82
	SIC	
N7495AN	PHIN	69- 83
	SIC	
N7495F	MULB	71-110
PHIN	SIC	
N7496B	MULB	74- 76
PHIN	SIC	
N7496F	MULB	74- 50
PHIN	SIC	
	VALG	
N7496N	PHIN	74- 77
SIC	VALG	
N8200F	MULB	75- 11
PHIN	SIC	
	VALG	
N8200N	MULB	75- 12
PHIN	SIC	
	VALG	
N8200Q	MULB	75- 13
PHIN	SIC	
	VALG	
N8201F	MULB	75- 14
PHIN	SIC	
	VALG	
N8201N	MULB	75- 15
PHIN	SIC	
	VALG	
N8201Q	MULB	75- 16
PHIN	SIC	
	VALG	
N8202F	MULB	83- 17
PHIN	SIC	
	VALG	
N8202N	MULB	83- 18
PHIN	SIC	
	VALG	
N8202Q	MULB	83- 19
PHIN	SIC	
	VALG	
N8203F	MULB	83- 20
PHIN	SIC	
	VALG	
N8203N	MULB	83- 21
PHIN	SIC	
	VALG	
N8203Q	MULB	83- 22
PHIN	SIC	
	VALG	
N8204Y	MULB	49- 17
	PHIN	
N8204YCB504	MULB	64- 53
	PHIN	
N8204YCB505	MULB	64- 12
	PHIN	
N8205Y	MULB	51- 67
PHIN	SIC	
N8205YCB175#1		64- 13
MULB	PHIN	
	SIC	
N8205YCB175#2		64- 58
MULB	PHIN	
	SIC	
N8220B	MULB	87- 1
	PHIN	
N8223B	MULB	46- 92
N8223F	MULB	46- 93
N8223W	MULB	46- 94
N8224B	MULB	46- 23
	PHIN	
N8224CB180	MULB	64- 11
	PHIN	
N8224F	MULB	46- 24
	PHIN	
N8224W	MULB	46- 25
	PHIN	
N8225B	MULB	20- 85
	PHIN	
N8225F	MULB	20- 86
	PHIN	
N8225W	MULB	20- 87
	PHIN	
N8228F	VALG	53- 28
N8228I	MULB	53- 29
	PHIN	
N8228ICD162	MULB	62- 56
	PHIN	
N8270A	MULB	67- 17
PHIN	SIC	
	VALG	
N8270F	MULB	67- 18
PHIN	SIC	
	VALG	
N8270N	PHIN	67- 19
SIC	VALG	
N8270W	MULB	67- 20
PHIN	SIC	
	VALG	
N8271B	MULB	67- 21
PHIN	SIC	
	VALG	
N8271F	MULB	67- 22
PHIN	SIC	
	VALG	
N8271N	PHIN	67- 23
SIC	VALG	
N8271W	MULB	67- 24
PHIN	SIC	
	VALG	
N8273B	MULB	83- 47
PHIN	SIC	
	VALG	
N8273F	MULB	83- 48
PHIN	SIC	
	VALG	
N8273N	PHIN	83- 49
SIC	VALG	
N8273W	MULB	83- 50
PHIN	SIC	
	VALG	
N8274B	MULB	83- 35
PHIN	SIC	
	VALG	
N8274F	MULB	83- 36
PHIN	SIC	
	VALG	
N8274N	PHIN	83- 37
SIC	VALG	
N8274W	MULB	83- 38
PHIN	SIC	
	VALG	
N8275B	MULB	65- 59
PHIN	SIC	
	VALG	
N8275E	MULB	65- 60
PHIN	SIC	
	VALG	
N8275R	MULB	65- 61
PHIN	SIC	
	VALG	
N8276A	MULB	82- 58
PHIN	SIC	
	VALG	
N8276F	MULB	82- 59
PHIN	SIC	
	VALG	
N8277B	MULB	82- 89
PHIN	SIC	
	VALG	
N8277F	MULB	82- 90
PHIN	SIC	
	VALG	
N8277N	PHIN	82- 91
SIC	VALG	
N9300B	MULB	67- 25
PHIN	SIC	
	VALG	
N9300E	MULB	67- 26
PHIN	SIC	
	VALG	
N9300F	SIC	71- 60
	VALG	
N9300N	SIC	71- 61
	VALG	
N21143MA	EMM	36- 73
N74164A	MULB	81- 77
PHIN	SIC	
N74164F	MULB	81- 78
PHIN	SIC	
	VALG	
N74164N	PHIN	81- 79
SIC	VALG	
N74165B	MULB	77- 80
PHIN	SIC	
N74165F	MULB	78- 37
PHIN	SIC	
	VALG	
N74165N	PHIN	77- 81
SIC	VALG	
N74166B	MULB	78- 3
PHIN	SIC	
N74166F	MULB	80- 80
PHIN	SIC	
	VALG	
N74166N	PHIN	80- 81
SIC	VALG	
N74170B	MULB	18- 27
PHIN	SIC	
N74170F	MULB	18- 28
PHIN	SIC	
	VALG	
N74170N	PHIN	18- 67
SIC	VALG	
N74172F	MULB	18- 96
PHIN	SIC	
N74172N	MULB	18- 97
PHIN	SIC	
N74174F	PHIN	76- 20
SIC	VALG	
N74174N	PHIN	76- 21
SIC	VALG	
N74175F	PHIN	69- 84
SIC	VALG	
N74175N	PHIN	69- 85
SIC	VALG	
N74178A	MULB	67- 27
PHIN	SIC	
N74178F	MULB	67- 28
PHIN	SIC	
N74179B	MULB	67- 29
PHIN	SIC	
N74179F	MULB	67- 30
PHIN	SIC	
N74194B	MULB	69- 86
PHIN	SIC	
N74194F	MULB	69- 87
PHIN	SIC	
	VALG	
N74194N	PHIN	69- 88
SIC	VALG	
N74195B	MULB	71- 62
PHIN	SIC	
N74195F	MULB	71- 63
PHIN	SIC	
	VALG	
N74195N	PHIN	71- 64
SIC	VALG	
N74198F	MULB	78- 4
PHIN	SIC	
	VALG	
N74198N	MULB	78- 5
PHIN	SIC	
	VALG	
N74199F	MULB	78- 6
PHIN	SIC	
	VALG	
N74199N	MULB	78- 7
PHIN	SIC	
	VALG	
N74298F	PHIN	69- 89
SIC	VALG	
N74298N	PHIN	69- 90
SIC	VALG	
N93415AF	MULB	28- 34
	PHIN	
N93425AF	MULB	28- 35
	PHIN	
NC6560L#2	NIT	56- 94
NC6561L#6	NIT	64- 8
NC6570L	NIT	63- 26
NC6571L	NIT	62- 65
NC6572L	NIT	62- 66
NC6573L	NIT	62- 67
NC6574L	NIT	62- 68
NC6575L	NIT	62- 69
NC6576L	NIT	62- 70
NC6580L	NIT	63- 14
NC6581L	NIT	62- 36
NC6583L	NIT	62- 37
NC6590L	NIT	57- 99
NC6591#1	NIT	64- 66
NC6591#2	NIT	64- 22
NC6591#3	NIT	64- 92
NC6591#4	NIT	64- 39
NC6591#5	NIT	64- 57
NC6591#6	NIT	64- 10
NC7033L	NIT	88- 34
NC7033P	NIT	88- 35
NC7051	NIT	46-107
NC7053L	NIT	47- 34
		88- 36
NC7053M	NIT	47- 35
NC7053P	NIT	47- 36
		88- 37
NC7055	NIT	47- 26
NC7400	NIT	47- 30
NC7451	NIT	53- 98
NC7714	NIT	88- 38
NC7810	NIT	57- 24
NCM6560AL	NIT	54-102
NCM6560AP	NIT	54-103
NCM6560BL	NIT	56- 97
NCM6560BP	NIT	56- 98
NCM6561L#1	NIT	64- 29
NCM6561L#2	NIT	64- 15
NCM6561L#3	NIT	64- 1
NCM6561L#4	NIT	64- 60
NCM6561L#6	NIT	64- 45
NCM6561P#1	NIT	64- 30
NCM6561P#2	NIT	64- 16
NCM6561P#3	NIT	64- 2
NCM6561P#5	NIT	64- 81
NCM6571L	NIT	63- 48
NCM6571P	NIT	63- 49
NCM6572L	NIT	63- 50
NCM6573L	NIT	63- 51
NCM6573P	NIT	63- 52
NCM6574L	NIT	63- 53
NCM6574P	NIT	63- 54
NCM6575L	NIT	63- 55
NCM6575P	NIT	63- 56
NCM6576L	NIT	63- 57
NCM6576P	NIT	63- 58
NCM6580L	NIT	63- 46
NCM6580P	NIT	63- 47
NCM6581L	NIT	62- 38
NCM6581P	NIT	62- 39
NCM6583L	NIT	62-102
NCM6583P	NIT	62-103
NMC2114AJ	NSC	33- 82
NMC2114AN	NSC	33- 83
NMC2114APJ	NSC	33- 84
NMC2114APN	NSC	33- 85
NMC2141J	NSC	40- 91
NMC2141N	NSC	40- 92
NMC2142AJ	NSC	33- 86
NMC2142AN	NSC	33- 87
NMC2142APJ	NSC	33- 88
NMC2142APN	NSC	33- 89
NMC2532Q	NSC	60- 30
NMC2724Q-A	NSC	57- 35
NMC2724Q-B	NSC	57- 36
NMC2732Q	NSC	60- 31
NMC4164J-1	NSC	45- 33
NMC4164J-2	NSC	45- 34
NMC4864	NSC	43- 32
NMC5257AJ	NSC	40- 93
NMC5257AN	NSC	40- 94
NMC5295J-2	NSC	43- 65
NMC5295J-3	NSC	43- 54
NMC5295J-4	NSC	43- 66
NMC5295N-2	NSC	43- 49

Δ-Registered with JEDEC by this manufacturer

1. TYPE No. CROSS INDEX

IN TYPE NUMBER SEQUENCE

TYPE No.	MFRS	Pg&Line
NMC5295N-3	NSC	43 - 55
NMC5295N-4	NSC	43 - 67
NMC6504J-2	NSC	40 - 29
NMC6504J-5	NSC	40 - 36
NMC6504J-9	NSC	40 - 30
NMC6504N-5	NSC	40 - 37
NMC6504N-9	NSC	40 - 31
NMC6508BJ-2	NSC	29 - 59
NMC6508BJ-9	NSC	29 - 60
NMC6508BN-9	NSC	29 - 61
NMC6508J-2	NSC	29 - 70
NMC6508J-5	NSC	29 - 95
NMC6508J-9	NSC	29 - 71
NMC6508N-5	NSC	29 - 96
NMC6508N-9	NSC	29 - 72
NMC6514J-2	NSC	33 - 18
NMC6514J-5	NSC	33 - 28
NMC6514J-9	NSC	33 - 19
NMC6514N-5	NSC	33 - 29
NMC6514N-9	NSC	33 - 20
NMC6518AJ-9	NSC	29 - 62
NMC6518BJ-2	NSC	29 - 63
NMC6518BJ-9	NSC	29 - 64
NMC6518BN-9	NSC	29 - 65
NMC6518J-2	NSC	29 - 73
NMC6518J-5	NSC	29 - 97
NMC6518J-9	NSC	29 - 74
NMC6518N-5	NSC	29 - 98
NMC6518N-9	NSC	29 - 75
NMC6551BJ-2	NSC	24 - 99
NMC6551BJ-9	NSC	24-100
NMC6551BN-9	NSC	24-101
NMC6551J-2	NSC	25 - 6
NMC6551J-5	NSC	25 - 14
NMC6551J-9	NSC	25 - 7
NMC6551N-5	NSC	25 - 15
NMC6551N-9	NSC	25 - 8
NMC6552BJ-2	NSC	24-102
NMC6552BJ-9	NSC	24-103
NMC6552BN-9	NSC	24-104
NMC6552J-2	NSC	25 - 9
NMC6552J-5	NSC	25 - 16
NMC6552J-9	NSC	25 - 10
NMC6552N-5	NSC	25 - 17
NMC6552N-9	NSC	25 - 11
NSC810IJ	NSC	21-107
NSC810IN	NSC	21-108
NSC810J	NSC	21-109
NSC810N	NSC	21-110
NSC830IJ	NSC	59 - 21
NSC830IN	NSC	59 - 22
NSC830J	NSC	59 - 23
NSC830N	NSC	59 - 24
P1101A1	AMD	24 - 8
	ITL	
P1101A	AMD	24 - 13
	ITL	
P2101	AMD	26 - 73
P2101-1	AMD	26 - 59
P2101-2	AMD	26 - 64
P2101A	ITL	26 - 28
P2101A-2	ITL	26 - 7
P2101A-4	ITL	26 - 52
P2102	AMD	32 - 85
P2102-1	AMD	32 - 38
P2102-2	AMD	32 - 77
P2102A2	ITL	31 - 43
P2102A4	ITL	32 - 24
P2102A6	ITL	32 - 78
P2102A	ITL	31 - 85
P2102AL2	ITL	31 - 44
P2102AL4	ITL	32 - 25
P2102AL	ITL	31 - 86
P2104A	ITL	39 - 58
P2104A-1	ITL	38 - 80
P2104A-2	ITL	39 - 2
P2104A-3	ITL	39 - 32
P2104A-4	ITL	39 - 49
P2107C	ITL	39 - 33
P2107C-1	ITL	38 - 81
P2107C-2	ITL	39 - 3
P2107C-4	ITL	39 - 50
P2111	AMD	26 - 74
P2111-1	AMD	26 - 60
P2111-2	AMD	26 - 65
P2111A	ITL	26 - 29
P2111A-2	ITL	26 - 8
P2111A-4	ITL	26 - 53
P2112	AMD	26 - 75
P2112-2	AMD	26 - 66
P2112A	ITL	26 - 30
P2112A-2	ITL	26 - 9
P2112A-4	ITL	26 - 54
P2114	ITL	35-109
P2114-2	ITL	34 - 36
P2114-3	ITL	35 - 30
P2114A4	ITL	34 - 37
P2114A5	ITL	34 - 77
P2114AL1	ITL	33 - 80
P2114AL2	ITL	33 - 90
P2114AL3	ITL	33 - 98
P2114AL4	ITL	34 - 38
P2114L2	ITL	34 - 39
P2114L3	ITL	35 - 31
P2114L	ITL	35-110
P2141-3	ITL	40-101
P2141-4	ITL	40 - 95
P2141-5	ITL	41 - 44
P2141L3	ITL	40-102
P2141L4	ITL	41 - 22
P2141L5	ITL	41 - 45
P2142-2	ITL	34 - 40
P2142-3	ITL	35 - 32
P2142L3	ITL	35 - 33
P2142L	ITL	32-101
P2401	AMD	86 - 24
P3101	AMD	20 - 71
	ITL	
P3101A	AMD	20 - 33
	ITL	
P3301	ITL	47 - 76
P3301A	ITL	47 - 69
P3302	ITL	49 - 83
P3302-4	ITL	49 - 85
P3322	ITL	49 - 84
P3322-4	ITL	49 - 86
P5101L	ITL	25 - 49
P5101L-1	ITL	25 - 38
P5101L-3	ITL	25 - 39
PAL10H8CJ	MMI	87 - 49
PAL10H8MJ	MMI	87 - 50
PAL10L8CJ	MMI	87 - 51
PAL10L8MJ	MMI	87 - 52
PAL12H6CJ	MMI	87 - 57
PAL12H6MJ	MMI	87 - 58
PAL12L6CJ	MMI	87 - 59
PAL12L6MJ	MMI	87 - 60
PAL14H4CJ	MMI	87 - 53
PAL14H4MJ	MMI	87 - 54
PAL14L4CJ	MMI	87 - 55
PAL14L4MJ	MMI	87 - 56
PAL16A4CJ	MMI	87 - 65
PAL16A4MJ	MMI	87 - 66
PAL16C1CJ	MMI	87 - 77
PAL16C1MJ	MMI	87 - 78
PAL16H2CJ	MMI	87 - 61
PAL16H2MJ	MMI	87 - 62
PAL16L2CJ	MMI	87 - 63
PAL16L2MJ	MMI	87 - 64
PAL16L8CJ	MMI	87 - 73
PAL16L8MJ	MMI	87 - 74
PAL16R4CJ	MMI	87 - 67
PAL16R4MJ	MMI	87 - 68
PAL16R6CJ	MMI	87 - 71
PAL16R6MJ	MMI	87 - 72
PAL16R8CJ	MMI	87 - 75
PAL16R8MJ	MMI	87 - 76
PAL16X4CJ	MMI	87 - 69
PAL16X4MJ	MMI	87 - 70
R2316BC	RKW	57 - 60
R2316BCE	RKW	57 - 64
R2316BMT	RKW	57 - 68
R2316BP	RKW	57 - 61
R2316BPE	RKW	57 - 65
R2316EC	RKW	57 - 62
R2316ECE	RKW	57 - 66
R2316EMT	RKW	57 - 69
R2316EP	RKW	57 - 63
R2316EPE	RKW	57 - 67
R2332-3C	RKW	59 - 83
R2332-3CE	RKW	59 - 84
R2332-3CMT	RKW	59 - 85
R2332-3P	RKW	59 - 86
R2332-3PE	RKW	59 - 87
R2332-4LC	RKW	60 - 34
R2332-4LCE	RKW	60 - 35
R2332-4LP	RKW	60 - 36
R2332-4LPE	RKW	60 - 37
R2332-35LC	RKW	60 - 32
R2332-35LP	RKW	60 - 33
R2332C	RKW	59 - 96
R2332CE	RKW	59 - 97
R2332CMT	RKW	59 - 98
R2332LC	RKW	60 - 38
R2332LCE	RKW	60 - 39
R2332LP	RKW	60 - 40
R2332LPE	RKW	60 - 41
R2332P	RKW	59 - 99
R2332PE	RKW	59-100
R2364A2C	RKW	60 - 97
R2364A2CE	RKW	60 - 98
R2364A2P	RKW	60 - 99
R2364A2PE	RKW	60-100
R2364A3C	RKW	61 - 7
R2364A3CE	RKW	61 - 8
R2364A3P	RKW	61 - 9
R2364A3PE	RKW	61 - 10
R2364A25C	RKW	60-105
R2364A25CE	RKW	60-106
R2364A25P	RKW	61 - 1
R2364A25PE	RKW	61 - 2
R2364B2C	RKW	60-101
R2364B2CE	RKW	60-102
R2364B2P	RKW	60-103
R2364B2PE	RKW	60-104
R2364B3C	RKW	61 - 11
R2364B3CE	RKW	61 - 12
R2364B3P	RKW	61 - 13
R2364B3PE	RKW	61 - 14
R2364B25C	RKW	61 - 3
R2364B25CE	RKW	61 - 4
R2364B25P	RKW	61 - 5
R2364B25PE	RKW	61 - 6
R8108-3C	RKW	37 - 75
R8108-3P	RKW	37 - 76
R8108-4C	RKW	37 - 78
R8108-4P	RKW	37 - 79
R8108-5C	RKW	37 - 87
R8108-5P	RKW	37 - 88
RBM256	RKW	87 - 14
RC54LS170F	MULB	18 - 56
RC54LS170W	MULB	18 - 57
RC54LS174B	MULB	76 - 58
RC54LS174F	MULB	76 - 59
RC54LS174W	MULB	76 - 60
RC54LS175B	MULB	71 - 65
RC54LS175F	MULB	71 - 66
RC54LS175W	MULB	71 - 67
RC54S194J	MULB	72 - 95
RC54S194W	MULB	72 - 96
RC54S195J	MULB	71 - 68
RC54S195W	MULB	71 - 69
RC54S200F	MULB	23 - 28
RC54S201F	MULB	22 - 38
RC54S301F	MULB	22 - 39
RC82S09I	MULB	21 - 56
RC82S10F	MULB	27-105
RC82S10I	MULB	27-106
RC82S11F	MULB	28 - 49
RC82S11I	MULB	29 - 16
RC82S16F	MULB	23 - 29
RC82S17F	MULB	23 - 30
RC82S21F	MULB	21 - 9
RC82S23F	MULB	46 - 98
RC82S23N	MULB	46 - 99
RC82S25F	MULB	20 - 72
RC82S100I	MULB	87-102
RC82S100N	MULB	87-103
RC82S101I	MULB	87-104
RC82S101N	MULB	87-105
RC82S102I	MULB	87 - 45
RC82S102N	MULB	87 - 46
RC82S103I	MULB	87 - 47
RC82S103N	MULB	87 - 48
RC82S106I	MULB	47 - 11
RC82S107I	MULB	47 - 12
RC82S114F	MULB	49 - 43
RC82S114I	MULB	49 - 44
RC82S114N	MULB	49 - 45
RC82S115F	MULB	52 - 65
RC82S115I	MULB	52 - 66
RC82S115N	MULB	52 - 67
RC82S116F	MULB	22 - 97
RC82S117F	MULB	22 - 98
RC82S123F	MULB	46-100
RC82S123N	MULB	46-101
RC82S126F	MULB	48 - 58
RC82S129F	MULB	48 - 59
RC82S130F	MULB	50 - 75
RC82S131F	MULB	50 - 76
RC82S136F	MULB	53 - 27
RC82S137F	MULB	53 - 60
RC82S140F	MULB	52 - 78
RC82S140N	MULB	52 - 79
RC82S141F	MULB	52 - 80
RC82S141N	MULB	52 - 81
RC82S180F	MULB	55 - 93
RC82S180N	MULB	55 - 94
RC82S181F	MULB	55 - 95
RC82S181N	MULB	55 - 96
RC82S184F	MULB	57 - 22
RC82S185F	MULB	57 - 23
RC82S190I	MULB	58 - 96
RC82S190N	MULB	58 - 97
RC82S191I	MULB	58 - 98
RC82S191N	MULB	57 - 85
RC82S200I	MULB	47 - 4
RC82S200N	MULB	47 - 5
RC82S201I	MULB	47 - 6
RC82S201N	MULB	47 - 7
RC82S214I	MULB	49 - 14
RC82S215I	MULB	51 - 60
RC82S226F	MULB	47 - 85
RC82S229F	MULB	47 - 86
RC82S230F	MULB	50 - 3
RC82S231F	MULB	49 - 87
RC82S240F	MULB	49 - 88
RC82S240N	MULB	51 - 10
RC82S241F	MULB	51 - 11
RC82S241N	MULB	51 - 12
RC82S280I	MULB	53-102
RC82S281I	MULB	53-103
RC82S290F	MULB	57 - 30
RC82S290N	MULB	57 - 28
RC82S291F	MULB	57 - 31
RC82S291N	MULB	57 - 29
RC82S2708F	MULB	55 - 97
RC82S2708N	MULB	55 - 98
RC2001K	MULB	83 - 76
RC2002K	MULB	83 - 95
RC2003K	MULB	84 - 1
RC2004K	MULB	84 - 18
RC2005K	MULB	85 - 14
RC3101AF	MULB	20 - 56
RC5491A	MULB	82 - 67
RC5491F	MULB	82 - 68
RC5491W	MULB	82 - 69
RC5494B	MULB	73 - 53
RC5494F	MULB	73 - 54
RC5494W	MULB	73 - 55
RC5495A	MULB	69 - 91
RC5495F	MULB	69 - 92
RC5496B	MULB	74 - 78
RC5496F	MULB	74 - 79
RC5496W	MULB	74 - 80
RC8200N	MULB	75 - 17
RC8200Q	MULB	75 - 18
RC8201F	MULB	75 - 19
RC8201N	MULB	75 - 20
RC8201Q	MULB	75 - 21
RC8202F	MULB	83 - 23
RC8202N	MULB	83 - 24
RC8202Q	MULB	83 - 25
RC8203F	MULB	83 - 26
RC8203N	MULB	83 - 27
RC8203Q	MULB	83 - 28
RC8223B	MULB	46 - 95
RC8223F	MULB	46 - 96
RC8223W	MULB	46 - 97
RC8224B	MULB	46 - 26
RC8224F	MULB	46 - 27
RC8224W	MULB	46 - 28
RC8270A	MULB	67 - 31
RC8270F	MULB	67 - 32
RC8270W	MULB	67 - 33
RC8271B	MULB	67 - 34
RC8271F	MULB	67 - 35
RC8271W	MULB	67 - 36
RC8273B	MULB	83 - 39
RC8273F	MULB	83 - 40
RC8273W	MULB	83 - 41
RC8274B	MULB	83 - 51
RC8274F	MULB	83 - 52
RC8274W	MULB	83 - 53
RC8275B	MULB	76 - 91
RC8275E	MULB	76 - 92
RC8275R	MULB	76 - 93
RC9300B	MULB	67 - 37
RC54164A	MULB	81 - 80
RC54164F	MULB	81 - 81
RC54165B	MULB	77 - 82
RC54165F	MULB	77 - 83
RC54165W	MULB	77 - 84
RC54166B	MULB	78 - 8
RC54166F	MULB	78 - 9
RC54166W	MULB	78 - 10
RC54170B	MULB	18 - 29
		65 - 14
RC54170F	MULB	18 - 30
		65 - 15
RC54170W	MULB	18 - 31
		65 - 16
RC54178A	MULB	67 - 38
RC54178F	MULB	67 - 39
RC54178W	MULB	67 - 40
RC54179B	MULB	67 - 41
RC54179F	MULB	67 - 42
RC54179W	MULB	67 - 43
RC54194B	MULB	69 - 93
RC54194F	MULB	69 - 94
RC54194W	MULB	70 - 1
RC54195B	MULB	71 - 70
RC54195F	MULB	71 - 71
RC54195W	MULB	71 - 72
RC54198F	MULB	78 - 11
RC54198N	MULB	78 - 12
RC54198Q	MULB	78 - 13
RC54199F	MULB	78 - 14
RC54199N	MULB	78 - 15
RC54199Q	MULB	78 - 16
RCD10241	RKW	87 - 17
RCP3271B	MULB	66 - 83
RCT10241	RKW	87 - 21
RD803	MON	73 - 67
RD804	MON	74 - 15
RD806	MON	76 - 90
RFD10241	RKW	87 - 19
RH803	MON	73 - 65
RH804	MON	73 - 80
RH806	MON	76 - 89
RM15	ECV	46 - 7
RM15Y	ECV	46 - 9
RM32	ECV	46 - 10
RM256A#1	ECV	47 - 46
RM256A#2	ECV	47 - 33
RM256A#3	ECV	47 - 15
RM256A#4	ECV	46-104
RM256A#5	ECV	46 - 12
RO3-2513	GIC	62 - 48
RO3-5120	GIC	52-104
RO3-8316A	GIC	58 - 24
RO3-8316B	GIC	58 - 22
RO3-9316A	GIC	58 - 25
RO3-9316B	GIC	58 - 23
RO3-9316C	GIC	58 - 21
RO3-9332A	GIC	59 - 76
RO3-9332B	GIC	59 - 75
RO6-2048S#2	GIC	51 - 2
ROM4732	SMC	59 - 64
ROM36000	SMC	60 - 77
RPD10241	RKW	87 - 18
RSA10241	RKW	87 - 20
RT801	MON	73 - 68
RT802	MON	74 - 22
RT807	MON	82 - 70
RT808	MON	81 - 21
RT809	MON	83-103
RT813	MON	83 - 91
S8X350F	PHIN	27 - 70
	SIC	
S54LS95BF	PHIN	69 - 31
	SIC	VALG
S54LS95BW	PHIN	69 - 32
	SIC	VALG
S54LS96F	PHIN	75 - 8
	SIC	VALG
S54LS96W	PHIN	75 - 9
	SIC	VALG
S54LS164F	PHIN	81 - 68
	SIC	VALG
S54LS164W	PHIN	81 - 69
	SIC	VALG
S54LS170F	PHIN	18 - 58
	SIC	VALG
S54LS170W	PHIN	18 - 59
	SIC	VALG
S54LS174B	MULB	76 - 61
	PHIN	SIC
S54LS174F	MULB	76 - 62
	PHIN	SIC
S54LS174W	MULB	76 - 63
	PHIN	SIC
S54LS175B	MULB	71 - 73
	PHIN	SIC
S54LS175F	MULB	71 - 74
	PHIN	SIC
		VALG
S54LS175W	MULB	71 - 75
	PHIN	SIC
		VALG
S54LS194AF	PHIN	69 - 33
	SIC	VALG
S54LS194AW	PHIN	69 - 34
	SIC	VALG
S54LS195AF	PHIN	70-108
	SIC	VALG
S54LS195AW	PHIN	70-109
	SIC	VALG
S54LS273F	PHIN	78 - 61
	SIC	VALG
S54LS289F	PHIN	19 - 72
	SIC	VALG
S54LS289W	PHIN	19 - 73
	SIC	VALG
S54LS295BF	PHIN	70-110
	SIC	VALG
S54LS295BW	PHIN	71 - 1
	SIC	VALG
S54LS298F	PHIN	69 - 35
	SIC	VALG
S54LS298W	PHIN	69 - 36
	SIC	VALG
S54LS299F	PHIN	78-108
	SIC	VALG
S54LS323F	PHIN	78-109
	SIC	VALG
S54LS364F	SIC	78-110
		VALG
S54LS374F	PHIN	79 - 1
	SIC	VALG
S54LS377F	PHIN	78 - 62
	SIC	VALG
S54LS378F	PHIN	76 - 44
	SIC	VALG
S54LS378W	PHIN	76 - 45
	SIC	VALG
S54LS379F	PHIN	71 - 2
	SIC	VALG
S54LS379W	PHIN	71 - 3
	SIC	VALG
S54LS395AF	PHIN	71 - 4
	SIC	VALG
S54LS395AW	PHIN	71 - 5
	SIC	VALG
S54LS398F	PHIN	69 - 37
	SIC	VALG
S54LS399F	PHIN	69 - 38
	SIC	VALG
S54LS399W	PHIN	69 - 39
	SIC	VALG
S54LS670F	PHIN	18 - 70
	SIC	VALG
S54LS670W	PHIN	18 - 71
	SIC	VALG
S54S89F	PHIN	20 - 73
	SIC	VALG
S54S172F	PHIN	18 - 98
	SIC	
S54S172N	PHIN	18 - 99
	SIC	
S54S189F	PHIN	20 - 57
	SIC	VALG
S54S194J	PHIN	72 - 97
	SIC	
S54S194W	PHIN	72 - 98
	SIC	
S54S195J	PHIN	71 - 76
	SIC	
S54S195W	PHIN	71 - 77
	SIC	
S54S301F	PHIN	23 - 31
	SIC	VALG
S68A10	AMI	21-106
S68A332	AMI	59-101
S68B10	AMI	21-105
S82LS10N	PHIN	28 - 50
S82LS11N	PHIN	28 - 51
S82LS116F	PHIN	23 - 78
	SIC	VALG
S82LS117F	PHIN	23 - 79
	SIC	VALG
S82S09AI	PHIN	21 - 64
S82S09I	PHIN	21 - 65
	SIC	VALG
S82S09N	VALG	21 - 66
S82S10N	VALG	28 - 52
S82S11N	VALG	28 - 53
S82S16F	PHIN	23 - 32
	SIC	VALG
S82S16N	VALG	23 - 33
S82S17F	PHIN	23 - 34
	VALG	
S82S17N	VALG	23 - 35
S82S21F	PHIN	21 - 10
S82S23F	PHIN	46-102
	SIC	VALG
S82S25F	PHIN	20 - 74
	SIC	VALG
S82S100I	PHIN	87 - 96
	SIC	VALG
S82S101I	PHIN	87 - 97
	SIC	VALG
S82S102I	PHIN	87 - 38
	SIC	VALG
S82S103I	PHIN	87 - 39
	SIC	VALG
S82S104I	SIC	87-106
S82S105I	SIC	87-107

△-Registered with JEDEC by this manufacturer

1. TYPE No. CROSS INDEX

IN TYPE NUMBER SEQUENCE

TYPE No.	MFRS	Pg&Line
S82S106I	PHIN	47 - 13
	SIC	
S82S107I	PHIN	47 - 14
	SIC	
S82S114F	PHIN	49 - 46
	VALG	
S82S115F	PHIN	52 - 68
	SIC	
S82S115N	VALG	
S82S116F	MULB	52 - 69
S82S117F	PHIN	22 - 99
S82S123F	PHIN	22 -100
	PHIN	46 -103
	SIC	
S82S126F	VALG	
	PHIN	48 - 80
	SIC	
S82S129F	VALG	
	PHIN	48 - 81
	SIC	
S82S130F	VALG	
	PHIN	50 - 91
	SIC	
S82S131F	VALG	
	PHIN	50 - 92
	SIC	
S82S136AF	VALG	
	PHIN	53 - 30
S82S136F	PHIN	53 - 32
	VALG	
S82S137AF	PHIN	53 - 31
S82S137F	PHIN	53 - 33
	SIC	
S82S140F	VALG	
	PHIN	52 - 82
	VALG	
S82S140N	MULB	52 - 83
	VALG	
S82S141F	PHIN	52 - 84
	SIC	
S82S181F	VALG	
	PHIN	55 - 99
	SIC	
S82S182F	VALG	
	PHIN	55 -100
S82S183F	PHIN	55 -101
S82S185I	PHIN	57 - 21
	SIC	
S82S191I	VALG	
	PHIN	58 - 99
	SIC	
S82S214F	VALG	49 - 15
S82S214I	PHIN	49 - 16
S82S215F	VALG	51 - 61
S82S215I	PHIN	51 - 62
S82S226F	PHIN	47 - 87
	VALG	
S82S229F	PHIN	47 - 88
	VALG	
S82S230F	PHIN	50 - 4
	VALG	
S82S231F	PHIN	50 - 5
	VALG	
S82S240F	PHIN	51 - 68
	VALG	
S82S241F	PHIN	51 - 69
	VALG	
S82S280F	VALG	54 - 51
S82S280I	PHIN	54 - 52
S82S281F	VALG	54 - 53
S82S281I	PHIN	54 - 54
S82S290F	PHIN	57 - 86
	VALG	
S82S290N	MULB	57 - 82
S82S291F	PHIN	57 - 87
	VALG	
S82S2708F	PHIN	55 -102
	SIC	
S93L415F	VALG	
S93L415N	PHIN	28 - 54
S93L425F	PHIN	28 - 55
S93L425N	PHIN	28 - 56
S2001K	PHIN	28 - 57
	PHIN	83 - 77
	SIC	
S2002K	PHIN	83 - 96
	SIC	
S2003K	PHIN	84 - 2
	SIC	
S2004K	PHIN	84 - 19
	SIC	
S2005K	PHIN	85 - 15
	SIC	
S2332	AMI	59 - 48
S2364	AMI	60 - 62
S3101AF	PHIN	20 - 58
	VALG	
S4264C	AMI	60 - 87
S4264D	AMI	60 - 88
S4264P	AMI	60 - 89
S5101	AMI	25 - 79
	SIC	
S5101-1	AMI	25 - 75
S5101-3	AMI	25 - 80
S5101-8	AMI	25 - 85
S5101L1	AMI	25 - 76
	SIC	
S5101L3	AMI	25 - 81
S5101L8	AMI	25 - 86
	SIC	
S5101L	AMI	25 - 82
S5491A	PHIN	82 - 41
	SIC	
	SIC	
S5491AF	PHIN	82 - 42
	SIC	
	SIC	
S5491AW	PHIN	82 - 43
	SIC	
S5491F	PHIN	82 - 44
	SIC	
S5491W	VALG	
	PHIN	82 - 45
	SIC	
S5494B	VALG	
	MULB	73 - 36
	PHIN	
	SIC	
S5494F	PHIN	73 - 37
	SIC	
S5494W	VALG	
	PHIN	73 - 38
	SIC	
	VALG	

TYPE No.	MFRS	Pg&Line
S5495A	PHIN	70 - 2
	SIC	
S5495AF	PHIN	70 - 3
	SIC	
S5495AW	VALG	
	PHIN	70 - 4
	SIC	
S5495F	VALG	
	PHIN	70 - 5
	SIC	
S5496B	VALG	
	PHIN	74 - 81
	SIC	
S5496F	VALG	
	PHIN	74 - 82
	SIC	
S5496W	VALG	
	PHIN	74 - 83
	SIC	
S6504	VALG	
	AMI	43 - 18
S6508	AMI	30 - 75
S6508-1	AMI	30 - 72
S6508A1	AMI	31 - 8
S6508A	AMI	30 - 76
S6514	AMI	33 - 58
S6831B	AMI	58 - 11
S8200F	PHIN	75 - 22
	SIC	
S8200N	VALG	
	PHIN	75 - 23
	SIC	
S8200Q	VALG	
	PHIN	75 - 24
	SIC	
S8201F	VALG	
	PHIN	75 - 25
	SIC	
S8201N	VALG	
	PHIN	75 - 26
	SIC	
S8201Q	VALG	
	PHIN	75 - 27
	SIC	
S8202F	VALG	
	PHIN	83 - 29
	SIC	
S8202N	VALG	
	PHIN	83 - 30
	SIC	
S8202Q	VALG	
	PHIN	83 - 31
	SIC	
S8203F	VALG	
	PHIN	83 - 32
	SIC	
S8203N	VALG	
	PHIN	83 - 33
	SIC	
S8203Q	VALG	
	PHIN	83 - 34
	SIC	
S8224B	VALG	
	PHIN	46 - 29
S8224F	PHIN	46 - 30
S8224W	PHIN	46 - 31
S8270A	PHIN	67 - 44
	SIC	
S8270F	PHIN	67 - 45
	SIC	
S8270W	VALG	
	PHIN	67 - 46
	SIC	
S8271B	VALG	
	PHIN	67 - 47
	SIC	
S8271F	VALG	
	PHIN	67 - 48
	SIC	
S8271W	VALG	
	PHIN	67 - 49
	SIC	
S8273B	VALG	
	PHIN	83 - 54
	SIC	
S8273F	VALG	
	PHIN	83 - 55
	SIC	
S8273W	VALG	
	PHIN	83 - 56
	SIC	
S8274B	VALG	
	PHIN	83 - 42
	SIC	
S8274F	VALG	
	PHIN	83 - 43
	SIC	
S8274W	VALG	
	PHIN	83 - 44
	SIC	
S8275B	VALG	
	PHIN	65 - 62
	SIC	
S8275E	VALG	
	PHIN	65 - 63
	SIC	
S8275R	VALG	
	PHIN	65 - 64
	SIC	
S9300B	VALG	
	PHIN	67 - 50
	SIC	
S9300E	VALG	
	PHIN	67 - 51
	SIC	
S9300F	VALG	
	SIC	71 - 78
	VALG	
S9300W	SIC	71 - 79
	VALG	
S54164A	PHIN	81 - 82
	SIC	
S54164F	PHIN	81 - 83
	SIC	
S54165B	VALG	
	PHIN	77 - 85
	SIC	
S54165F	VALG	
	PHIN	77 - 86
	SIC	
S54166W	VALG	
	PHIN	77 - 87
	SIC	
S54166B	VALG	
	PHIN	78 - 17
	SIC	
S54166F	VALG	
	PHIN	78 - 18
	SIC	
S54166W	VALG	
	PHIN	78 - 19
	SIC	
S54170B	VALG	
	PHIN	18 - 32
	SIC	
S54170F	VALG	
	PHIN	18 - 33
	SIC	
S54170W	VALG	
	PHIN	18 - 34
	SIC	
S54174F	VALG	
	PHIN	76 - 22
	SIC	
S54174W	VALG	
	PHIN	76 - 23
	SIC	
S54175F	VALG	
	PHIN	70 - 6
	SIC	
	VALG	

TYPE No.	MFRS	Pg&Line
S54175W	PHIN	70 - 7
	SIC	
S54178A	VALG	
	PHIN	67 - 52
	SIC	
S54178F	VALG	
	PHIN	67 - 53
	SIC	
S54178W	VALG	
	PHIN	67 - 54
	SIC	
S54179B	VALG	
	PHIN	67 - 55
	SIC	
S54179F	VALG	
	PHIN	67 - 56
	SIC	
S54179W	VALG	
	PHIN	67 - 57
	SIC	
S54194B	VALG	
	PHIN	70 - 8
	SIC	
S54194F	VALG	
	PHIN	70 - 9
	SIC	
S54194W	VALG	
	PHIN	70 - 10
	SIC	
S54195B	VALG	
	PHIN	71 - 80
	SIC	
S54195F	VALG	
	PHIN	71 - 81
	SIC	
S54195W	VALG	
	PHIN	71 - 82
	SIC	
S54198F	VALG	
	PHIN	78 - 20
	SIC	
S54198N	VALG	
	PHIN	78 - 21
	SIC	
S54198Q	VALG	
	PHIN	78 - 22
	SIC	
S54198W	VALG	
	PHIN	78 - 23
	SIC	
S54199F	VALG	
	PHIN	78 - 24
	SIC	
S54199N	VALG	
	PHIN	78 - 25
	SIC	
S54199Q	VALG	
	PHIN	78 - 26
	SIC	
S54199W	VALG	
	SIC	78 - 27
	VALG	
S54298F	PHIN	70 - 11
	SIC	
S54298W	VALG	
	PHIN	70 - 12
	SIC	
SCL4006ABC	VALG	
SCL4006BC	SSS	75 - 47
SCL4006BD	SSS	65 - 5
SCL4006BE	SSS	65 - 6
SCL4006BF	SSS	65 - 7
SCL4014BC	SSS	65 - 8
SCL4014BD	SSS	80 - 3
SCL4014BE	SSS	80 - 4
SCL4014BF	SSS	80 - 5
SCL4014BHN	SSS	79 - 82
SCL4015BC	SSS	80 - 6
SCL4015BD	SSS	73 -100
SCL4015BE	SSS	73 -101
SCL4015BF	SSS	73 -102
SCL4015BHN	SSS	74 - 1
SCL4021AD	SSS	74 - 2
SCL4021BC	SSS	80 - 13
SCL4021BD	SSS	80 - 14
SCL4021BE	SSS	80 - 15
SCL4021BF	SSS	80 - 16
SCL4021BHN	SSS	80 - 17
SCL4034AH	SSS	80 - 18
SCL4034BC	SSS	77 - 46
SCL4034BD	SSS	77 - 25
SCL4034BE	SSS	77 - 26
SCL4034BH	SSS	77 - 27
SCL4034D	SSS	77 - 28
SCL4035ABC	SSS	77 - 47
SCL4035ABD	SSS	77 - 48
SCL4035ABE	SSS	66 - 41
SCL4035ABF	SSS	77 - 49
SCL4035ABHN	SSS	66 - 42
SCL4035BC	SSS	66 - 43
SCL4035BD	SSS	66 - 29
SCL4035BE	SSS	66 - 30
SCL4035BF	SSS	66 - 31
SCL4035BHN	SSS	66 - 32
SCL4042BC	SSS	66 - 33
SCL4042BD	SSS	65 - 92
SCL4042BE	SSS	65 - 93
SCL4042BF	SSS	65 - 94
SCL4042BHN	SSS	65 - 95
SCL4076BC	SSS	65 - 96
SCL4076BD	SSS	66 - 55
SCL4076BE	SSS	66 - 56
SCL4076BF	SSS	66 - 57
SCL4076BHN	SSS	66 - 58
SCL4094BC	SSS	66 - 59
SCL4094BD	SSS	81 - 4
SCL4094BE	SSS	83 - 7
SCL4094BF	SSS	81 - 5
SCL4094BHN	SSS	83 - 8
SCM5101-1	SSS	81 - 6
SCM5101-1A	SSS	25 - 77
SCM5101-3	SSS	25 - 67
SCM5101-8	SSS	25 - 83
SCM5102-1	SSS	25 - 87
SCM5102-1A	SSS	30 - 74
SCM5102-3	SSS	30 - 73
SCM5102-8	SSS	30 - 82
SCM5114-1	SSS	30 - 83
SCM5114-3	SSS	33 - 21
SCM5114-5	SSS	33 - 22
SCM5114-8	SSS	33 - 32
SCM5316	SSS	33 - 33
SCM5317	SSS	57 - 88
SCM5532	SSS	59 - 29
SCM5534	SSS	60 - 43
	SSS	60 - 42

TYPE No.	MFRS	Pg&Line
SDA2006	SIEG	46 -105
SFC4174E	NPC	76 - 24
	THCF	
SFC4174EM	NPC	76 - 25
	THCF	
SFC4174ET	NPC	76 - 26
	THCF	
SFC4175E	NPC	70 - 13
	THCF	
SFC4175EM	NPC	70 - 14
	THCF	
SFC4175ET	NPC	70 - 15
	THCF	
SFC70301K	NPC	47 - 59
	THCF	
SFC70301KM	NPC	47 - 60
	THCF	
SFC70301KT	NPC	47 - 61
	THCF	
SFC80101AK	NPC	20 - 34
	THCF	
SFC80101K	NPC	20 - 75
	THCF	
SFC80106AK	NPC	22 - 67
	THCF	
SFC80107K	NPC	22 - 68
	THCF	
SFF821L14E-20		34 - 41
	THCF	
SFF821L14E-25		34 - 78
	THCF	
SFF821L14E-30		35 - 34
	THCF	
SFF821L14E-45		36 - 1
	THCF	
SFF821L14J-25		34 - 79
	THCF	
SFF821L14J-30		35 - 35
	THCF	
SFF821L14J-45		36 - 2
	THCF	
SFF70611KM#1	NPC	49 - 24
	THCF	
SFF70611KM#2	NPC	50 - 6
	THCF	
SFF70611KT#1	NPC	49 - 25
	THCF	
SFF70611KT#2	NPC	50 - 7
	THCF	
SFF70612KM#1	NPC	51 - 89
	THCF	
SFF70612KM#2	NPC	53 - 34
	THCF	
SFF70612KT#1	NPC	51 - 90
	THCF	
SFF70612KT#2	NPC	53 - 35
	THCF	
SFF70701KM	NPC	49 - 70
	THCF	
SFF70701KT	NPC	49 - 71
	THCF	
SFF71708J	THCF	56 - 32
SFF71708K	THCF	56 - 33
SFF71716J	THCF	59 - 11
SFF71716K	THCF	59 - 12
SFF82114E-20	THCF	34 - 42
SFF82114E-25	THCF	34 - 80
SFF82114E-30	THCF	35 - 36
SFF82114E-45	THCF	36 - 3
SFF82114J-20	THCF	34 - 43
SFF82114J-25	THCF	34 - 81
SFF82114J-30	THCF	35 - 37
SFF82114J-45	THCF	36 - 4
SFF96364AE	THCF	88 - 39
SFF96364AK	THCF	88 - 40
SFF96364BE	THCF	88 - 41
SFF96364BK	THCF	88 - 42
SL7-C2100-30	GIC	85 - 17
SM61	TRW	68 - 57
SM63	TRW	68 - 58
SM71	TRW	68 - 59
SM73	TRW	68 - 60
SM81	TRW	19 - 3
SM82	TRW	19 - 2
SM83	TRW	19 - 4
SMJ2708JM	TII	56 - 34
SN54L91J	TII	82 - 16
SN54L91N	TII	82 - 17
SN54L91T	TII	82 - 18
SN54L95J	TII	66 - 9
SN54L95T	TII	66 - 10
SN54L96J	TII	74 - 51
SN54L99J	TII	66 - 11
SN54L164J	TII	81 - 25
SN54L164N	TII	81 - 26
SN54L164T	TII	81 - 27
SN54LS89J	MOTA	19 - 74
SN54LS89W	MOTA	19 - 75
SN54LS91J	TII	82 - 46
SN54LS91W	TII	82 - 47
SN54LS95AJ	TII	70 - 48
SN54LS95AW	TII	70 - 49
SN54LS95BJ	MOTA	71 - 6
	TII	
SN54LS95BW	MOTA	71 - 7
	TII	
SN54LS96J	TII	74 - 84
SN54LS96W	TII	74 - 85
SN54LS164J	AMD	81 - 70
	MOTA	
SN54LS164W	AMD	81 - 71
	MOTA	
SN54LS165J	MOTA	80 - 95
	TII	

TYPE No.	MFRS	Pg&Line
SN54LS165W	MOTA	80 - 96
	TII	
SN54LS166J	TII	80 - 73
SN54LS166W	TII	80 - 74
SN54LS170J	MOTA	18 - 15
	TII	
SN54LS170W	MOTA	18 - 16
	TII	
SN54LS174J	MOTA	76 - 46
	TII	
SN54LS174W	MOTA	76 - 47
	TII	
SN54LS175J	MOTA	71 - 8
	TII	
SN54LS175W	MOTA	71 - 9
	TII	
SN54LS189J	MOTA	19 - 76
	TII	
SN54LS189W	MOTA	19 - 77
	TII	
SN54LS194AJ	AMD	71 - 10
	MOTA	
SN54LS194AW	AMD	71 - 11
	MOTA	
SN54LS195AJ	AMD	71 - 12
	MOTA	
SN54LS195AW	AMD	71 - 13
	MOTA	
SN54LS200AJ	TII	23 - 20
SN54LS200AW	TII	23 - 21
SN54LS202J	TII	22 - 82
SN54LS202W	TII	22 - 83
SN54LS207J	TII	24 - 49
SN54LS208J	TII	24 - 50
SN54LS214J	TII	28 - 78
SN54LS215J	TII	28 - 62
SN54LS219J	TII	19 - 78
SN54LS219W	TII	19 - 79
SN54LS273J	AMD	78 - 63
	MOTA	
SN54LS273W	AMD	78 - 64
	MOTA	
SN54LS289J	MOTA	19 - 80
	TII	
SN54LS289W	MOTA	19 - 81
	TII	
SN54LS295AJ	MOTA	71 - 14
	TII	
SN54LS295AW	MOTA	71 - 15
	TII	
SN54LS295BJ	TII	69 - 40
SN54LS295BW	TII	69 - 41
SN54LS299J	MOTA	78 - 65
	TII	
SN54LS299W	AMD	81 - 92
	MOTA	
SN54LS300AJ	TII	23 - 22
SN54LS300AW	TII	23 - 23
SN54LS302J	TII	22 - 84
SN54LS302W	TII	22 - 85
SN54LS314J	TII	28 - 79
SN54LS315J	TII	28 - 63
SN54LS319J	TII	19 - 82
SN54LS319W	TII	19 - 83
SN54LS322J	AMD	79 - 2
	MOTA	
SN54LS322W	AMD	79 - 3
	MOTA	
SN54LS323J	AMD	79 - 4
	MOTA	
SN54LS323W	AMD	79 - 5
	MOTA	
SN54LS373J	TII	79 - 6
SN54LS374J	AMD	79 - 7
	MOTA	
SN54LS374W	AMD	79 - 8
	MOTA	
SN54LS377J	AMD	78 - 66
	MOTA	
SN54LS377W	AMD	78 - 67
	MOTA	
SN54LS378J	MOTA	76 - 48
	TII	
SN54LS378W	MOTA	76 - 49
	TII	
SN54LS379J	MOTA	71 - 16
	TII	
SN54LS379W	MOTA	71 - 17
	TII	
SN54LS395AJ	TII	69 - 42
SN54LS395AW	TII	69 - 43
SN54LS395J	MOTA	71 - 18
	TII	
SN54LS395W	MOTA	71 - 19
	TII	
SN54LS396J	TII	73 - 70
SN54LS396W	TII	73 - 71
SN54LS478J	TII	55 - 55
SN54LS479J	TII	55 - 56
SN54LS574J	MOTA	79 - 9
SN54LS574W	MOTA	79 - 10
SN54LS600J	TII	88 - 45
SN54LS601J	TII	88 - 51
SN54LS602J	TII	88 - 46
SN54LS603J	TII	88 - 52
SN54LS610J	TII	87 - 22
SN54LS611J	TII	87 - 23
SN54LS612J	TII	87 - 24
SN54LS613J	TII	87 - 25
SN54LS670J	MOTA	18 - 17
	TII	
SN54LS670W	MOTA	18 - 18
	TII	
SN54LS673J	TII	83 - 68

Δ-Registered with JEDEC by this manufacturer

1. TYPE No. CROSS INDEX

IN TYPE NUMBER SEQUENCE

TYPE No.	MFRS	Pg&Line
SN54LS673W	TII	83 - 69
SN54LS674J	TII	83 - 70
SN54LS674W	TII	83 - 71
SN54S174J	AMD	76 - 79
	TII	
SN54S174W	AMD	76 - 80
	TII	
SN54S175J	AMD	73 - 1
	TII	
SN54S175W	AMD	73 - 2
	TII	
SN54S189J	AMD	20 - 10
SN54S189W	AMD	20 - 11
SN54S194J	AMD	72 - 99
	TII	
SN54S194W	AMD	72 -100
	TII	
SN54S195J	AMD	72 - 88
	TII	
SN54S195W	AMD	72 - 89
	TII	
SN54S200AJ	TII	23 - 24
SN54S200AW	TII	23 - 25
SN54S207J	TII	24 - 43
SN54S208J	TII	24 - 44
SN54S214J	TII	28 - 64
SN54S281J	TII	72 - 53
SN54S281W	TII	72 - 54
SN54S289J	AMD	20 - 12
SN54S289W	AMD	20 - 13
SN54S299J	TII	79 - 32
SN54S300AJ	TII	23 - 26
SN54S300AW	TII	23 - 27
SN54S301J	TII	22 - 76
SN54S301W	TII	22 - 77
SN54S314J	TII	28 - 65
SN54S330J	TII	87 -108
SN54S331J	TII	87 -109
SN54S373J	TII	79 - 37
SN54S374J	MMI	79 - 38
	TII	
SN54S374J#	MMI	79 - 43
SN54S400J	TII	39 - 96
SN54S401J	TII	39 - 97
SN54S452J	TII	58 - 54
SN54S453J	TII	58 - 55
SN54S474J	TII	52 - 62
SN54S475J	TII	52 - 63
SN54S476J	TII	53 - 40
SN54S477J	TII	53 - 41
SN54S478J	TII	55 - 16
SN54S479J	TII	55 - 17
SN54S2708J	TII	55 - 18
SN54S3708J	TII	55 - 19
SN74L91J	TII	82 - 19
SN74L91N	TII	82 - 20
SN74L95J	TII	66 - 12
SN74L95N	TII	66 - 13
SN74L96J	TII	74 - 52
SN74L96N	TII	74 - 53
SN74L99J	TII	66 - 14
SN74L99N	TII	66 - 15
SN74L164J	TII	81 - 28
SN74L164N	TII	81 - 29
SN74L164T	TII	81 - 30
SN74LS89J	MOTA	19 - 84
SN74LS89N	MOTA	19 - 85
SN74LS89W	MOTA	19 - 86
SN74LS91J	TII	82 - 48
SN74LS91N	TII	82 - 49
SN74LS95AJ	TII	70 - 50
SN74LS95AN	TII	70 - 51
SN74LS95AW	TII	70 - 52
SN74LS95BJ	MOTA	71 - 20
	TII	
SN74LS95BN	MOTA	71 - 21
	TII	
SN74LS95BW	MOTA	71 - 22
SN74LS96J	TII	74 - 86
SN74LS96N	TII	74 - 87
SN74LS164J	AMD	81 - 72
MOTA	TII	
SN74LS164N	AMD	81 - 73
MOTA	TII	
SN74LS164W	MOTA	81 - 74
SN74LS165J	MOTA	80 - 97
	TII	
SN74LS165N	MOTA	80 - 98
	TII	
SN74LS165W	MOTA	80 - 99
SN74LS166J	TII	80 - 75
SN74LS166N	TII	80 - 76
SN74LS170J	MOTA	18 - 19
	TII	
SN74LS170N	MOTA	18 - 20
	TII	
SN74LS170W	MOTA	18 - 21
SN74LS174J	MOTA	76 - 50
	TII	
SN74LS174N	MOTA	76 - 51
	TII	
SN74LS174W	MOTA	76 - 52
SN74LS175J	MOTA	71 - 23
	TII	
SN74LS175N	MOTA	71 - 24
	TII	
SN74LS175W	MOTA	71 - 25
SN74LS189J	MOTA	19 - 87
	TII	
SN74LS189N	MOTA	19 - 88
	TII	
SN74LS189W	MOTA	19 - 89
SN74LS194AJ	AMD	71 - 26
MOTA	TII	

TYPE No.	MFRS	Pg&Line
SN74LS194AN	AMD	71 - 27
MOTA	TII	
SN74LS194AW	MOTA	71 - 28
SN74LS195AJ	AMD	71 - 29
MOTA	TII	
SN74LS195AN	AMD	71 - 30
MOTA	TII	
SN74LS195AW	MOTA	71 - 31
SN74LS200AJ	TII	22 -107
SN74LS200AN	TII	22 -108
SN74LS202J	TII	22 - 86
SN74LS202N	TII	22 - 87
SN74LS207J	TII	24 - 51
SN74LS207N	TII	24 - 52
SN74LS208J	TII	24 - 53
SN74LS208N	TII	24 - 54
SN74LS214J	TII	28 - 70
SN74LS214N	TII	28 - 71
SN74LS215J	TII	28 - 66
SN74LS215N	TII	28 - 67
SN74LS219J	TII	19 - 90
SN74LS219N	TII	19 - 91
SN74LS273J	AMD	78 - 68
MOTA	TII	
SN74LS273N	AMD	78 - 69
MOTA	TII	
SN74LS273W	MOTA	78 - 70
SN74LS289J	MOTA	19 - 92
	TII	
SN74LS289N	MOTA	19 - 93
	TII	
SN74LS289W	MOTA	19 - 94
SN74LS295AJ	MOTA	71 - 32
	TII	
SN74LS295AN	MOTA	71 - 33
	TII	
SN74LS295AW	MOTA	71 - 34
SN74LS295BJ	TII	69 - 44
SN74LS295BN	TII	69 - 45
SN74LS299J	AMD	78 - 71
MOTA	TII	
SN74LS299N	AMD	78 - 72
MOTA	TII	
SN74LS299W	MOTA	79 - 11
SN74LS300AJ	TII	22 -109
SN74LS300AN	TII	22 -110
SN74LS302J	TII	22 - 88
SN74LS302N	TII	22 - 89
SN74LS314J	TII	28 - 72
SN74LS314N	TII	28 - 73
SN74LS315J	TII	28 - 68
SN74LS315N	TII	28 - 69
SN74LS319J	TII	19 - 95
SN74LS319N	TII	19 - 96
SN74LS322J	AMD	79 - 12
MOTA	TII	
SN74LS322N	AMD	79 - 13
MOTA	TII	
SN74LS322W	MOTA	79 - 14
SN74LS323J	AMD	79 - 15
MOTA	TII	
SN74LS323N	AMD	79 - 16
MOTA	TII	
SN74LS323W	MOTA	79 - 17
SN74LS373J	TII	79 - 18
SN74LS373N	TII	79 - 19
SN74LS374J	AMD	79 - 20
	TII	
SN74LS374W	MOTA	78 - 73
SN74LS377J	AMD	78 - 74
MOTA	TII	
SN74LS377N	AMD	78 - 75
MOTA	TII	
SN74LS377W	MOTA	76 - 53
SN74LS378J	MOTA	76 - 54
	TII	
SN74LS378N	MOTA	76 - 55
SN74LS378W	MOTA	71 - 35
SN74LS379J	MOTA	71 - 36
	TII	
SN74LS379N	MOTA	71 - 37
SN74LS379W	MOTA	69 - 46
SN74LS395AJ	TII	69 - 47
SN74LS395AN	TII	71 - 38
SN74LS395J	MOTA	79 - 23
	TII	
SN74LS395N	MOTA	79 - 24
SN74LS395W	MOTA	79 - 25
SN74LS574J	MOTA	79 - 26
SN74LS574N	MOTA	79 - 27
SN74LS574W	MOTA	79 - 28
SN74LS600J	TII	88 - 47
SN74LS600N	TII	88 - 48
SN74LS601J	TII	88 - 53
SN74LS601N	TII	88 - 54
SN74LS602J	TII	88 - 49
SN74LS602N	TII	88 - 50
SN74LS603J	TII	88 - 55
SN74LS603N	TII	88 - 56
SN74LS610J	TII	87 - 26
SN74LS610N	TII	87 - 27
SN74LS611J	TII	87 - 28
SN74LS611N	TII	87 - 29
SN74LS612J	TII	87 - 30
SN74LS612N	TII	87 - 31

TYPE No.	MFRS	Pg&Line
SN74LS613J	TII	87 - 32
SN74LS613N	TII	87 - 33
SN74LS670J	MOTA	18 - 22
	TII	
SN74LS670N	MOTA	18 - 23
	TII	
SN74LS670W	MOTA	18 - 24
SN74LS673J	TII	83 - 74
SN74LS673N	TII	83 - 75
SN74LS674J	TII	83 - 72
SN74LS674N	TII	83 - 73
SN74S174J	AMD	76 - 81
	TII	
SN74S174N	AMD	76 - 82
	TII	
SN74S175J	AMD	73 - 3
	TII	
SN74S175N	AMD	73 - 4
	TII	
SN74S189J	AMD	20 - 14
SN74S189N	AMD	20 - 15
SN74S194J	AMD	72 -101
	TII	
SN74S194N	AMD	72 -102
	TII	
SN74S195J	AMD	72 - 90
	TII	
SN74S195N	AMD	72 - 91
	TII	
SN74S200AJ	TII	22 -101
SN74S200AN	TII	22 -102
SN74S201J	TII	22 - 78
SN74S201N	TII	22 - 79
SN74S207J	TII	24 - 45
SN74S207N	TII	24 - 46
SN74S208J	TII	24 - 47
SN74S208N	TII	24 - 48
SN74S209J	TII	28 - 74
SN74S209N	TII	28 - 75
SN74S214AJ	TII	28 - 44
SN74S214AN	TII	28 - 45
SN74S214J	TII	28 - 58
SN74S214N	TII	28 - 59
SN74S281J	TII	72 - 55
SN74S281N	TII	72 - 56
SN74S289J	AMD	20 - 16
SN74S289N	AMD	20 - 17
SN74S299J	TII	79 - 33
SN74S299N	TII	79 - 34
SN74S300AJ	TII	23 - 1
SN74S300AN	TII	23 - 2
SN74S301J	TII	22 - 80
SN74S301N	TII	22 - 81
SN74S309J	TII	28 - 76
SN74S309N	TII	28 - 77
SN74S314AJ	TII	28 - 46
SN74S314AN	TII	28 - 47
SN74S314J	TII	28 - 60
SN74S314N	TII	28 - 61
SN74S330J	TII	87 -110
SN74S330N	TII	88 - 1
SN74S331J	TII	88 - 2
SN74S331N	TII	88 - 3
SN74S373J	TII	79 - 39
SN74S373N	TII	79 - 40
SN74S374J	MMI	79 - 41
	TII	
SN74S374N	TII	79 - 42
SN74S400J	TII	39 - 98
SN74S400N	TII	39 - 99
SN74S401J	TII	39 -100
SN74S401N	TII	39 -101
SN74S452J	TII	58 - 56
SN74S452N	TII	58 - 57
SN74S453J	TII	58 - 58
SN74S453N	TII	58 - 59
SN74S454J	TII	56 -102
SN74S454N	TII	56 -103
SN74S455J	TII	56 -104
SN74S455N	TII	58 - 49
SN74S474N	TII	52 - 51
SN74S479J	TII	55 - 20
SN74S3708J	TII	55 - 21
SN74S3708N	TII	55 - 22
SN5481AJ	TII	19 - 26
SN5481AW	TII	19 - 27
SN5484AJ	TII	19 - 28
SN5484AW	TII	19 - 29
SN5489J	AMD	20 - 76
SN5489W	AMD	20 - 77
SN5491AJ	TII	82 - 50
SN5491AW	TII	82 - 51
SN5494J	TII	73 - 39
SN5494W	TII	73 - 40
SN5495AJ	TII	70 - 16
SN5495AW	TII	70 - 17
SN5496J	TII	74 - 88
SN5496W	TII	74 - 89
SN7481AJ	TII	19 - 5
SN7481AN	TII	19 - 6
SN7484AJ	TII	19 - 7
SN7484AN	TII	19 - 8
SN7491AJ	TII	82 - 52
SN7491AN	TII	82 - 53
SN7494J	TII	73 - 41
SN7494N	TII	73 - 42
SN7495AJ	TII	70 - 18
SN7495AN	TII	70 - 19
SN7496J	TII	74 - 90
SN7496N	TII	74 - 91
SN10140JE	TII	21 - 37
SN10142JE	TII	21 - 28
SN10144JE	TII	22 - 66
SN10147JE	TII	21-104

TYPE No.	MFRS	Pg&Line
SN10148JE	TII	21 - 38
SN15370J	TII	65 - 35
SN15370N	TII	65 - 36
SN54164J	AMD	81 - 84
	TII	
SN54164W	AMD	81 - 85
	TII	
SN54165J	TII	80 - 60
SN54165W	TII	80 - 61
SN54166J	TII	80 - 82
SN54166W	TII	80 - 83
SN54170J	TII	18 - 60
SN54170W	TII	18 - 61
SN54174J	TII	76 - 27
SN54174W	TII	76 - 28
SN54175J	TII	70 - 20
SN54175W	TII	70 - 21
SN54178J	TII	70 - 22
SN54178W	TII	70 - 23
SN54179J	TII	70 - 24
SN54179W	TII	70 - 25
SN54184J	TII	64 - 70
SN54184W	TII	64 - 71
SN54185AJ	TII	64 - 76
SN54185AW	TII	64 - 77
SN54194J	AMD	70 - 26
	TII	
SN54194W	AMD	70 - 27
	TII	
SN54195J	AMD	71 - 83
	TII	
SN54195N	TII	71 - 84
SN54195W	AMD	71 - 85
	TII	
SN54198J	TII	78 - 28
SN54198W	TII	78 - 29
SN54199J	TII	78 - 30
SN54199W	TII	78 - 31
SN54273J	TII	78 - 76
SN54278J	TII	65 - 65
SN54278W	TII	65 - 66
SN54376J	TII	71 - 86
SN54376W	TII	71 - 87
SN74164J	AMD	81 - 86
	TII	
SN74164N	AMD	81 - 87
	TII	
SN74165J	TII	80 - 62
SN74165N	TII	80 - 63
SN74166J	TII	80 - 84
SN74166N	TII	80 - 85
SN74170J	TII	18 - 62
SN74170N	TII	18 - 63
SN74172J	TII	18 -100
SN74172N	TII	18 -101
SN74174J	TII	76 - 29
SN74174N	TII	76 - 30
SN74175J	TII	70 - 28
SN74175N	TII	70 - 29
SN74178J	TII	70 - 30
SN74178N	TII	70 - 31
SN74179J	TII	70 - 32
SN74179N	TII	70 - 33
SN74184J	TII	64 - 72
SN74184N	TII	64 - 73
SN74185AJ	TII	64 - 78
SN74185AN	TII	64 - 79
SN74194J	AMD	70 - 34
	TII	
SN74194N	AMD	70 - 35
	TII	
SN74195J	AMD	71 - 88
	TII	
SN74195N	AMD	71 - 89
	TII	
SN74195W	TII	71 - 90
SN74198J	TII	78 - 32
SN74198N	TII	78 - 33
SN74199J	TII	78 - 34
SN74199N	TII	78 - 35
SN74273J	TII	78 - 77
SN74273N	TII	78 - 78
SN74278J	TII	65 - 67
SN74278N	TII	65 - 68
SN74376J	TII	71 - 91
SN74376N	TII	71 - 92
SN81002	TII	21 - 29
SP3271B	PHIN	66 - 84
	SIC	
SR5015-80	SMC	84 -100
SR5015-81	SMC	84 -108
SR5015-133	SMC	85 - 44
SR5017	SMC	85 - 45
SR5018	SMC	85 - 1
SS5-1032-31	GIC	83 - 90
SS6-8212-16	GIC	83 - 78
SS4015AE	SST	73 - 95
SYC2101-1	SYK	26 - 94
SYC2101A	SYK	26 - 82
SYC2101A-2	SYK	26 - 76
SYC2101A-4	SYK	26 - 88
SYC2111-1	SYK	26 - 95
SYC2111A	SYK	26 - 83
SYC2111A-2	SYK	26 - 77
SYC2111A-4	SYK	26 - 89
SYC2112-1	SYK	26 - 96
SYC2112A	SYK	26 - 84
SYC2112A-2	SYK	26 - 78
SYC2112A-4	SYK	26 - 90
SYC2114	SYK	36 - 33
SYC2114-2	SYK	36 - 21
SYC2114-3	SYK	36 - 27
SYC2114L	SYK	36 - 34
SYC2114L-2	SYK	36 - 22

TYPE No.	MFRS	Pg&Line
SYC2114L-3	SYK	36 - 28
SYC2114LV	SYK	36 - 35
SYC2114LV-2	SYK	36 - 23
SYC2114LV-3	SYK	36 - 29
SYC2142	SYK	36 - 5
SYC2142-2	SYK	34 - 44
SYC2142-3	SYK	35 - 38
SYC2142L	SYK	36 - 6
SYC2142L-2	SYK	34 - 45
SYC2142L-3	SYK	35 - 39
SYC2142LV	SYK	36 - 7
SYC2142LV-2	SYK	34 - 46
SYC2142LV-3	SYK	35 - 40
SYC2147	SYK	40 - 77
SYC2147-3	SYK	40 - 61
SYC2147L	SYK	40 - 78
SYC2316A	SYK	57 - 74
SYC2316B	SYK	57 - 72
SYC2316B-3	SYK	57 - 70
SYC2332	SYK	59 - 54
SYC2332-3	SYK	59 - 50
SYC2333	SYK	59 - 55
SYC2333-3	SYK	59 - 51
SYC2364	SYK	60 - 48
SYC2364-3	SYK	60 - 67
SYC3316	SYK	57 - 83
SYD3316	SYK	57 - 84
SYMC2114	SYK	36 - 8
SYMC2114-3	SYK	35 - 41
SYP2101-1	SYK	26 - 97
SYP2101A	SYK	26 - 85
SYP2101A-2	SYK	26 - 79
SYP2101A-4	SYK	26 - 91
SYP2111-1	SYK	26 - 98
SYP2111A	SYK	26 - 86
SYP2111A-2	SYK	26 - 80
SYP2111A-4	SYK	26 - 92
SYP2112-1	SYK	26 - 99
SYP2112A	SYK	26 - 87
SYP2112A-2	SYK	26 - 81
SYP2112A-4	SYK	26 - 93
SYP2114	SYK	36 - 36
SYP2114-2	SYK	36 - 24
SYP2114-3	SYK	36 - 30
SYP2114L	SYK	36 - 37
SYP2114L-2	SYK	36 - 25
SYP2114L-3	SYK	36 - 31
SYP2114LV	SYK	36 - 38
SYP2114LV-2	SYK	36 - 26
SYP2114LV-3	SYK	36 - 32
SYP2142	SYK	36 - 9
SYP2142-2	SYK	34 - 47
SYP2142-3	SYK	35 - 42
SYP2142L	SYK	36 - 10
SYP2142L-2	SYK	34 - 48
SYP2142L-3	SYK	35 - 43
SYP2142LV	SYK	36 - 11
SYP2142LV-2	SYK	34 - 49
SYP2142LV-3	SYK	35 - 44
SYP2316A	SYK	57 - 75
SYP2316B	SYK	57 - 73
SYP2316B-3	SYK	57 - 71
SYP2332	SYK	59 - 56
SYP2332-3	SYK	59 - 52
SYP2333	SYK	59 - 57
SYP2333-3	SYK	59 - 53
SYP2364	SYK	60 - 49
SYP2364-3	SYK	60 - 68
T100	ICC	67 - 58
T101	ICC	67 - 59
T102	ICC	74 - 36
T104	ICC	83 - 6
T113	ICC	83 - 92
T114	ICC	76 - 35
T150B1	SGAI	68 - 61
T150D1	SGAI	68 - 62
T150D2	SGAI	68 - 63
T153B1A	SGAI	18 -106
T153B1B	SGAI	18 -107
T154D1	SGAI	46 - 32
T154D1A%	SGAI	63 - 41
T154D1B%	SGAI	63 - 42
T165D1	SGAI	20 - 96
T7481B1	SGAI	19 - 30
T7484B1	SGAI	19 - 31
TBP14S10J	TII	47 - 51
TBP14S10MJ	TII	47 - 55
TBP14S10N	TII	47 - 52
TBP14SA10J	TII	47 - 53
TBP14SA10N	TII	47 - 54
TBP18S22J	TII	49 - 4
TBP18S22MJ	TII	49 - 8
TBP18S22N	TII	49 - 5
TBP18S030J	TII	46 - 16
TBP18S030N	TII	46 - 17
TBP18S42J	TII	51 - 37
TBP18S42MJ	TII	51 - 35
TBP18S42N	TII	51 - 38
TBP18S46J	TII	51 - 29
TBP18S46MJ	TII	51 - 36
TBP18S46N	TII	51 - 30
TBP18SA22J	TII	49 - 6
TBP18SA22N	TII	49 - 7
TBP18SA42J	TII	51 - 31
TBP18SA42N	TII	51 - 32
TBP18SA46J	TII	51 - 33
TBP18SA46N	TII	51 - 34
TBP24S10J	TII	47 - 47
TBP24S10N	TII	47 - 48
TBP24S41J	TII	53 - 11
TBP24S41MJ	TII	53 - 15
TBP24S41N	TII	53 - 12
TBP24S81J	TII	56 - 86
TBP24S81N	TII	56 - 87

Δ-Registered with JEDEC by this manufacturer

1. TYPE No. CROSS INDEX

IN TYPE NUMBER SEQUENCE

TYPE No.	MFRS	Pg&Line
TBP24SA10J	TII	47- 49
TBP24SA10N	TII	47- 50
TBP24SA41J	TII	53- 13
TBP24SA41N	TII	53- 14
TBP24SA81J	TII	56- 88
TBP24SA81N	TII	56- 89
TBP28L22J	TII	49- 2
TBP28L22N	TII	49- 3
TBP28L42J	TII	51- 25
TBP28L42N	TII	51- 26
TBP28L45J	TII	51- 27
TBP28L45N	TII	51- 28
TBP28L85J	TII	54- 10
TBP28L85N	TII	54- 11
TBP28L86J	TII	54- 16
TBP28L86MJ	TII	54- 18
TBP28L86N	TII	54- 17
TBP28L166J	TII	57- 48
TBP28L166N	TII	57- 49
TBP28P42J	TII	51- 17
TBP28P42N	TII	51- 18
TBP28P45J	TII	51- 19
TBP28P45N	TII	51- 20
TBP28P85J	TII	54- 6
TBP28P85N	TII	54- 7
TBP28P166J	TII	57- 44
TBP28P166N	TII	57- 45
TBP28R45J	TII	51- 15
TBP28R45N	TII	51- 16
TBP28R85J	TII	54- 4
TBP28R85N	TII	54- 5
TBP28R166J	TII	57- 42
TBP28R166N	TII	57- 43
TBP28S42J	TII	51- 21
TBP28S42N	TII	51- 22
TBP28S45J	TII	51- 23
TBP28S45N	TII	51- 24
TBP28S85J	TII	54- 8
TBP28S85N	TII	54- 9
TBP28S86J	TII	54- 12
TBP28S86N	TII	54- 13
TBP28S166J	TII	57- 46
TBP28S166N	TII	57- 47
TBP28SA86J	TII	54- 14
TBP28SA86N	TII	54- 15
TC5047AP-1	TOSJ	33- 36
TC5047AP-2	TOSJ	33- 42
TC5047APL-1	TOSJ	33- 37
TC5047APL-2	TOSJ	33- 43
TC5501D	TOSJ	25- 40
TC5501D-1	TOSJ	25- 50
TC5501P	TOSJ	25- 41
TC5501P-1	TOSJ	25- 51
TC5504AD-2	TOSJ	40- 24
TC5504AD-3	TOSJ	40- 32
TC5504ADL-2	TOSJ	40- 25
TC5504ADL-3	TOSJ	40- 33
TC5504AP-2	TOSJ	40- 26
TC5504AP-3	TOSJ	40- 34
TC5504APL-2	TOSJ	40- 27
TC5504APL-3	TOSJ	40- 35
TC5504P	TOSJ	40- 39
TC5504P-1	TOSJ	40- 41
TC5504P-2	TOSJ	40- 43
TC5504PL	TOSJ	40- 40
TC5504PL-1	TOSJ	40- 42
TC5504PL-2	TOSJ	40- 44
TC5508P	TOSJ	29-105
TC5508P-1	TOSJ	30- 16
TC5508P-4	TOSJ	29-106
TC5514AD-2	TOSJ	33- 12
TC5514AD-3	TOSJ	33- 23
TC5514ADL-2	TOSJ	33- 13
TC5514ADL-3	TOSJ	33- 24
TC5514AP-2	TOSJ	33- 14
TC5514AP-3	TOSJ	33- 25
TC5514APL-2	TOSJ	33- 15
TC5514APL-3	TOSJ	33- 26
TC5514P	TOSJ	33- 34
TC5514P-1	TOSJ	33- 40
TC5514P-2	TOSJ	33- 44
TC5514PL	TOSJ	33- 35
TC5514PL-1	TOSJ	33- 41
TC5514PL-2	TOSJ	33- 45
TC5516AP	TOSJ	37-107
TC5516APL	TOSJ	37-108
TDC1005J	TRW	84- 77
TDC1006J	TRW	85- 53
TF4014AJ	TII	79- 70
TF4014AN	TII	79- 71
TF4015AJ	TII	73- 93
TF4015AN	TII	73- 94
TF4021AJ	TII	79- 72
TF4021AN	TII	79- 73
TIB0203	TII	87- 9
TM101	TUNH	19- 32
TM106	TUNH	23- 47
TM107	TUNH	23- 55
TM188	TUNH	46- 20
TM601	TUNH	48- 11
TM621	TUNH	48- 12
TM622	TUNH	50- 31
TM624	TUNH	50- 32
TMM314AP	TOSJ	36- 12
TMM314AP-1	TOSJ	34- 50
TMM314AP-3	TOSJ	35- 45
TMM314APL	TOSJ	36- 13
TMM314APL-1	TOSJ	33- 62
TMM314APL-3	TOSJ	34- 51
TMM315D	TOSJ	40- 79
TMM315D-1	TOSJ	40- 62
TMM323D	TOSJ	57- 33
TMM323D-1	TOSJ	57- 32
TMM333P	TOSJ	59- 39
TMM334P	TOSJ	57- 34
TMM416D-2	TOSJ	43- 99
TMM416D-3	TOSJ	44- 32
TMM416D-4	TOSJ	44- 67
TMM416P-2	TOSJ	43-100
TMM416P-3	TOSJ	44- 33
TMM416P-4	TOSJ	44- 68
TMM2016P	TOSJ	38- 9
TMM2016P-1	TOSJ	38- 1
TMM2332P	TOSJ	59- 37
TMM2364P	TOSJ	60- 47
TMM2732D	TOSJ	59- 38
TMM4164C-3	TOSJ	45- 39
TMM4164C-4	TOSJ	45- 49
TMS21L47-7JDL	TII	38- 29
TMS21L47-7JL	TII	38- 30
TMS21L47-7NL	TII	40- 80
TMS25L32JL	TII	60- 28
TMS27A16C	MOTA	58-105
TMS27A16L	MOTA	58-106
TMS27L08JL	TII	56- 35
TMS40L44-15NL	TII	40-103
TMS40L44-20NL	TII	41- 23
TMS40L44-25NL	TII	41- 46
TMS40L44-45NL	TII	41- 99
TMS40L45-20NL	TII	34- 52
TMS40L45-25NL	TII	34- 82
TMS40L45-45NL	TII	36- 14
TMS2114-15NL	TII	33- 99
TMS2114-20NL	TII	34- 53
TMS2114-25NL	TII	34- 83
TMS2114-45NL	TII	36- 15
TMS2114L-15NL	TII	33-100
TMS2114L-20NL	TII	34- 54
TMS2114L-25NL	TII	34- 84
TMS2114L-45NL	TII	36- 16
TMS2147-5JDL	TII	38- 31
TMS2147-5NL	TII	40- 63
TMS2147-7JDL	TII	38- 32
TMS2147-7JL	TII	38- 33
TMS2147-7NL	TII	40- 81
TMS2147-9JDL	TII	38- 34
TMS2147-9JL	TII	38- 35
TMS2147-9NL	TII	38- 36
TMS2508-25JL	TII	56- 1
TMS2508-30JL	TII	56- 6
TMS2516JL	TII	59- 13
TMS2532JL	TII	60- 29
TMS2564JL	TII	60- 96
TMS2708-35JL	TII	56- 11
TMS2708JL	TII	56- 36
TMS2716JL	TII	59- 14
TMS2716L	MOTA	59- 15
TMS2758JL0	TII	56- 37
TMS2758JL1	TII	56- 38
TMS3114JC	AMD	85- 31
TMS3114NC	AMD	85- 32
TMS4008NL0	TII	37- 80
TMS4008NL1	TII	37- 81
TMS4016NL	TII	38- 18
TMS4036NL	TII	21- 55
TMS4044-15NL	TII	40-104
TMS4044-20NL	TII	41- 24
TMS4044-25NL	TII	41- 47
TMS4044-45NL	TII	41-100
TMS4108-15NL	TII	43- 25
TMS4108-20NL	TII	43- 26
TMS4108-25NL	TII	43- 27
TMS4116-15JDL	TII	43-101
TMS4116-15NL	TII	43-102
TMS4116-20JDL	TII	44- 34
TMS4116-20NL	TII	44- 35
TMS4116-25JDL	TII	44- 69
TMS4116-25NL	TII	44- 70
TMS4132-15JDL	TII	45- 17
TMS4132-20JDL	TII	45- 22
TMS4132-25JDL	TII	45- 23
TMS4164-10JDL	TII	38- 37
TMS4164-12JDL	TII	38- 38
TMS4164-15JDL	TII	45- 40
TMS4164-20JDL	TII	45- 50
TMS4164JDL	TII	45- 41
TMS4244JL	TII	40- 96
TMS4244NL	TII	40- 97
TMS4245JL	TII	33- 91
TMS4245NL	TII	33- 92
TMS4732NL	TII	59- 65
TMS4764NL	TII	60- 61
TMSR4A	WLD	70- 36
TMSR8	WLD	82- 60
TMSR8A	WLD	73- 69
TMSR16	WLD	82- 92
TMSR24	WLD	83- 4
TMSR32	WLD	83- 5
TP4014AJ	TII	79- 66
TP4014AN	TII	79- 67
TP4015AJ	TII	73- 90
TP4015AN	TII	73- 91
TP4021AJ	TII	79- 68
TP4021AN	TII	79- 69
uPB403D	NECJ	48- 79
uPB405C	NECJ	52- 74
uPB405D	NECJ	52- 75
uPB406D	NECJ	53- 87
uPB409C	NECJ	61- 18
uPB409C-1	NECJ	61- 19
uPB409C-2	NECJ	61- 20
uPB409D	NECJ	61- 21
uPB409D-1	NECJ	61- 22
uPB409D-2	NECJ	61- 23
uPB417C	NECJ	55-103
uPB417D	NECJ	55-104
uPB425C	NECJ	52- 76
uPB425D	NECJ	52- 77
uPB426D	NECJ	53- 88
uPB429C	NECJ	61- 24
uPB429D	NECJ	61- 25
uPB429D-1	NECJ	61- 26
uPB429D-2	NECJ	61- 27
uPB2091D	NECJ	77- 73
uPB2164D	NECJ	81- 93
uPB2170D	NECJ	18- 64
uPB2175D	NECJ	73- 31
uPB2195D	NECJ	72- 34
uPB2198D	NECJ	78- 79
uPB2200D	NECJ	23- 48
uPB2202D	NECJ	23- 63
uPB2205D	NECJ	28-105
uPB2206D	NECJ	23- 49
uPB2918D	NECJ	65- 69
uPB7491C	NECJ	82- 62
uPB10142D	NECJ	21- 30
uPB10144D	NECJ	22- 53
uPB10148D	NECJ	21- 39
uPB10176D	NECJ	75- 97
uPB74164C	NECJ	81- 94
uPB74175C	NECJ	71-109
uPB74195C	NECJ	72- 1
uPB74198C	NECJ	79- 26
uPD410D	NECM	42- 12
uPD410D-1	NECJ	42- 18
uPD410D-2	NECJ	42- 31
uPD410D-3	NECM	40- 86
uPD411AC	NECJ	39- 70
uPD411AC-1	NECJ	39- 63
uPD411AC-2	NECJ	39- 61
uPD411AC-E	NECJ	39- 73
uPD411D	NECJ	39- 71
uPD411D-1	NECJ	39- 64
uPD411D-2	NECJ	39- 62
uPD411D-3	NECJ	39- 60
uPD411D-4	NECM	39- 59
uPD412C	NECJ	27- 38
uPD412D	NECJ	26- 31
uPD414AC-E	NECM	39- 74
uPD414D-1	NECM	38- 39
uPD416C	NECJ	44- 77
uPD416C-1	NECJ	44- 71
uPD416C-2	NECJ	44- 36
uPD416C-3	NECJ	43-103
uPD416C-5	NECM	43- 47
uPD416C-E	NECJ	44- 79
uPD416D	NECJ	44- 78
uPD416D-1	NECJ	44- 72
uPD416D-2	NECJ	44- 37
uPD416D-3	NECJ	43-104
uPD416D-5	NECM	43- 48
uPD416D-E	NECJ	44- 80
uPD421D	NECM	37- 82
uPD421D-1	NECM	37- 77
uPD421D-2	NECM	37- 70
uPD421D-3	NECM	37- 69
uPD421D-5	NECM	37- 66
uPD443/6508D-1		29- 76
uPD443C	NECJ	29-107
uPD443C-1	NECJ	29- 99
uPD443D	NECJ	29-108
uPD443D-1	NECJ	29-100
uPD444C	NECJ	32- 92
uPD444C-1	NECJ	33- 16
uPD444C-2	NECJ	35- 46
uPD444C-3	NECJ	33- 27
uPD444C#	NECM	34- 55
uPD445LC	NECJ	33- 60
uPD445LC-1	NECJ	33- 59
uPD458D	NECJ	56- 45
uPD465D	NECJ	54- 98
uPD471D	NECJ	52-105
uPD472D01	NECJ	62- 61
uPD472D	NECJ	53- 99
uPD473D01	NECJ	63- 19
uPD473D02	NECJ	62- 26
uPD473D03	NECJ	63- 9
uPD473D04	NECJ	62- 27
uPD473D	NECJ	62-109
uPD474D01	NECJ	63- 8
uPD474D02	NECJ	62- 25
uPD474D	NECJ	63- 13
uPD481D-001	NECJ	62- 1
uPD481D-002	NECJ	62- 2
uPD482D-001	NECJ	62- 3
uPD482D-002	NECJ	62- 4
uPD2101ALC	NECJ	27- 39
uPD2101ALC-2	NECJ	27- 40
uPD2101ALC-4	NECJ	27- 41
uPD2102ALC	NECJ	32- 88
uPD2102ALC-2	NECJ	32- 87
uPD2102ALC-4	NECJ	32- 89
uPD2111ALC	NECJ	27- 42
uPD2111ALC-2	NECJ	27- 43
uPD2111ALC-4	NECJ	27- 44
uPD2114LC	NECJ	36- 17
uPD2114LC-1	NECJ	35- 47
uPD2114LC-2	NECJ	34- 85
uPD2114LC-3	NECJ	34- 56
uPD2114LC-5	NECJ	33-101
uPD2114LD	NECJ	36- 18
uPD2114LD-1	NECJ	35- 48
uPD2114LD-2	NECJ	34- 86
uPD2114LD-3	NECJ	34- 57
uPD2114LD-5	NECJ	33-102
uPD2147D	NECM	42- 14
uPD2147D-2	NECJ	42- 10
uPD2147D-3	NECJ	42- 6
uPD2167	NECM	45- 10
uPD2308AC	NECM	54- 93
uPD2308AD	NECM	54- 94
uPD2308C	NECJ	54-104
uPD2308D	NECJ	54-105
uPD2316EC	NECJ	58- 27
uPD2316EC#	NECM	58- 28
uPD2316ED	NECJ	58- 29
uPD2316ED#	NECM	58- 30
uPD2332AC	NECM	59- 66
uPD2332AD	NECM	59- 67
uPD2332BC	NECM	59- 68
uPD2332BD	NECM	59- 69
uPD2332C	NECJ	59-102
uPD2332D	NECJ	59-103
uPD2364C	NECJ	60- 63
uPD2364D	NECJ	60- 64
uPD2716	NECM	58- 12
uPD2716D	NECJ	58- 47
uPD2732	NECM	60- 13
uPD2732D	NECJ	60- 11
uPD4014C	NECJ	80- 88
uPD4015C	NECJ	74- 16
uPD4021C	NECJ	80- 89
uPD4035C	NECJ	66- 44
uPD4104C	NECJ	42- 76
uPD4104C-1	NECJ	42- 52
uPD4104C-1#	NECM	42- 53
uPD4104C-2	NECJ	42- 32
uPD4104C-2#	NECM	42- 33
uPD4104C-3	NECM	40-105
uPD4104C-30	NECM	41-105
uPD4104C-33	NECM	41-106
uPD4104C-36	NECM	41-107
uPD4104C#	NECM	42- 77
uPD4104D	NECJ	42- 78
uPD4104D-1	NECJ	42- 54
uPD4104D-1#	NECM	42- 55
uPD4104D-2	NECJ	42- 34
uPD4104D-2#	NECM	42- 35
uPD4104D-3	NECM	40-106
uPD4104D-30	NECM	41-108
uPD4104D-33	NECM	41-109
uPD4104D-35	NECM	41-110
uPD4104D-36	NECM	42- 1
uPD4164C-1	NECM	45- 55
uPD4164C-2	NECM	45- 51
uPD4164D2	NECM	45- 52
uPD4164D-1	NECJ	45- 56
uPD4164D-2	NECJ	45- 53
uPD4164D-3	NECJ	45- 42
uPD5101-E	NECJ	25- 88
uPD5101C-E	NECJ	25- 42
uPD5101LC	NECJ	25- 84
uPD5101LC-1	NECJ	25- 78
uPD6514C	NECM	34- 58
uPD6514C-1	NECM	34- 87
uPD6514C-2	NECM	35- 49
uPD6514C-3	NECM	36- 19
uPD8355C	NECM	57-101
uPD8755AD	NECM	58-107
uPD41046-35	NECM	42- 2
UA2525D#1	SOD	47- 42
UA2525D#2	SOD	47- 98
UA2525D#3	SOD	49- 80
UA2525D#4	SOD	53- 2
UA2548#1	SOD	49- 32
UA2548#2	SOD	50- 10
UA2548#3	SOD	53- 5
UA2548#4	SOD	56- 77
UA2572D	SOD	49- 74
UA3525D#1	SOD	47- 43
UA3525D#2	SOD	47- 99
UA3525D#3	SOD	49- 81
UA3525D#4	SOD	53- 3
UA3525F#1	SOD	47- 44
UA3525F#2	SOD	47-100
UA3525F#3	SOD	49- 82
UA3525F#4	SOD	53- 4
UA3548#1	SOD	49- 33
UA3548#2	SOD	50- 11
UA3548#3	SOD	53- 6
UA3548#4	SOD	56- 78
UA3572D	SOD	49- 75
UC6548#1	SOD	56- 80
UC6548#2	SOD	53- 8
UC6548#3	SOD	51- 3
UC6548#4	SOD	49- 64
UC6572	SOD	49- 72
UC7523#1	SOD	49- 29
UC7523#2	SOD	50- 8
UC7548#1	SOD	56- 81
UC7548#2	SOD	53- 9
UC7548#3	SOD	51- 4
UC7548#4	SOD	49- 65
UC7572	SOD	49- 73
UC65253K#1	SOD	47- 37
UC65253K#2	SOD	49- 76
UC65253K#3	SOD	47- 94
UC65253K#4	SOD	52-108
UC65254K#1	SOD	47- 38
UC65254K#2	SOD	49- 77
UC65254K#3	SOD	47- 95
UC65254K#4	SOD	52-109
UC65723K	SOD	49- 68
UC75253K#1	SOD	47- 39
UC75253K#2	SOD	49- 78
UC75253K#3	SOD	47- 96
UC75253K#4	SOD	52-110
UC75254K#1	SOD	47- 40
UC75254K#2	SOD	49- 79
UC75254K#3	SOD	47- 97
UC75254K#4	SOD	53- 1
UC75723K	SOD	49- 69
V2114-UCB	EMM	35- 50
V2114-UCE	EMM	35- 51
Z6104-2CS	ZIL	40-107
Z6104-2PS	ZIL	40-108
Z6104-3CS	ZIL	41- 25
Z6104-3PS	ZIL	41- 26
Z6104-4CS	ZIL	41- 48
Z6104-4PS	ZIL	41- 49
Z6104L-4CS	ZIL	41- 50
Z6104L-4PS	ZIL	41- 51
Z6114-2CS	ZIL	33-103
Z6114-2PS	ZIL	33-104
Z6114-3CS	ZIL	34- 59
Z6114-3PS	ZIL	34- 60
Z6114-4CS	ZIL	34- 88
Z6114-4PS	ZIL	34- 89
Z6114-5CS	ZIL	35- 52
Z6114-5PS	ZIL	35- 53
Z6114-6CS	ZIL	35- 62
Z6114-6PS	ZIL	35- 63
Z6132-3CS	ZIL	43- 19
Z6132-3PS	ZIL	43- 20
Z6132-4CS	ZIL	43- 21
Z6132-4PS	ZIL	43- 22
Z6132-5CS	ZIL	43- 23
Z6132-5PS	ZIL	43- 24
Z6142-2CS	ZIL	33-105
Z6142-2PS	ZIL	33-106
Z6142-3CS	ZIL	34- 61
Z6142-3PS	ZIL	34- 62
Z6142-4CS	ZIL	34- 90
Z6142-4PS	ZIL	34- 91
Z6142-5CS	ZIL	35- 54
Z6142-5PS	ZIL	35- 55
Z6142-6CS	ZIL	35- 64
Z6142-6PS	ZIL	35- 65
ZN54L91E	FERB	82- 21
ZN54L91J	FERB	82- 22
ZN54L95E	FERB	66- 16
ZN54L95J	FERB	66- 17
ZN54L96E	FERB	74- 54
ZN54L96J	FERB	74- 55
ZN54L164E	FERB	81- 31
ZN54L164J	FERB	81- 32
ZN74L91E	FERB	82- 23
ZN74L91J	FERB	82- 24

Δ-Registered with JEDEC by this manufacturer

1. TYPE No. CROSS INDEX

IN TYPE NUMBER SEQUENCE

TYPE No.	MFRS	Pg&Line	TYPE No.	MFRS	Pg&Line	TYPE No.	MFRS	Pg&Line	TYPE No.	MFRS	Pg&Line	TYPE No.	MFRS	Pg&Line
ZN74L95E	FERB	66- 18												
ZN74L95J	FERB	66- 19												
ZN74L96E	FERB	74- 56												
ZN74L96J	FERB	74- 57												
ZN74L164E	FERB	81- 33												
ZN74L164J	FERB	81- 34												
ZN5491AE	FERB	82- 54												
ZN5491AJ	FERB	82- 55												
ZN5494E	FERB	73- 43												
ZN5494J	FERB	73- 44												
ZN5495AE	FERB	73- 52												
ZN5495AJ	FERB	70- 37												
ZN5496E	FERB	74- 92												
ZN5496J	FERB	74- 93												
ZN7491AE	FERB	82- 56												
ZN7491AJ	FERB	82- 57												
ZN7494E	FERB	73- 45												
ZN7494J	FERB	73- 46												
ZN7495AE	FERB	70- 38												
ZN7495AJ	FERB	70- 39												
ZN7496E	FERB	74- 94												
ZN7496J	FERB	74- 95												
ZN54164E	FERB	81- 88												
ZN54164J	FERB	81- 89												
ZN54165E	FERB	80- 64												
ZN54165J	FERB	80- 65												
ZN54166J	FERB	80- 86												
ZN54174E	FERB	76- 31												
ZN54174J	FERB	76- 32												
ZN54175E	FERB	70- 40												
ZN54175J	FERB	70- 41												
ZN54194E	FERB	70- 42												
ZN54194J	FERB	70- 43												
ZN74164E	FERB	81- 90												
ZN74164J	FERB	81- 91												
ZN74165E	FERB	80- 66												
ZN74165J	FERB	80- 67												
ZN74166E	FERB	80- 87												
ZN74166J	FERB	78- 36												
ZN74174E	FERB	76- 33												
ZN74174J	FERB	76- 34												
ZN74175E	FERB	70- 44												
ZN74175J	FERB	70- 45												
ZN74194E	FERB	70- 46												
ZN74194J	FERB	70- 47												

2. READ-WRITE MEMORIES (RAMS)

IN ORDER OF (1)No.WORDS(2)No.BITS/WORD (3)MODE(4)STRUCT.(5)MAX ACC.TIME(6)TYPE No.

LINE No.	6 TYPE No.	ORGANIZATION 1 No. WORDS	2 BITS PER WORD	3 MODE	4 STRUCTURE CODE	5 MAX ACCESS TIME (s)	MAX WRITE CYCLE TIME (s)	MAX OPER. POWER DISS. (W)	RATED POWER SUP. SPAN NEG. (V)	POS. (V)	INPUT LOGIC LEVELS MAX '0' (V)	MIN '1' (V)	MIN OUTPUT SINK CURRENT (A)	@ OUT (V)	MIN CLOCK FREQ. (Hz)	OPER. TEMP. RANGE CODE -	+	DRAWINGS LOGIC/ BLOCK	OUTLINE
1	9030DC	4	2	S	BTX	25n	45n	350m†	0.0	4.5	.80	1.25	5.0uΔ			0	7	PN14d	ML19c
2	95401DC	4	4	S	BEX	10nØ	6.0n$Ø	416m	5.2	0.0	-1.4Ø	-1.1	50mⓏ			0	7	A60a	TO116
3	54LS170DM	4	4	S	BTD	20n†	25n$Ø	200m	0.0	5.0	.70	2.0Δ	4.0m	.40		5	C	A156	ML127
4	54LS170FM	4	4	S	BTD	20n†	25n$Ø	200m	0.0	5.0	.70	2.0Δ	4.0m	.40		5	C	A156	FL14g
5	54LS670DM	4	4	S	BTD	20n†	25n$Ø	250m	0.0	5.0	.70	2.0§	4.0m	.40		5	C	A157	ML127k
6	54LS670FM	4	4	S	BTD	20n†	25n$Ø	250m	0.0	5.0	.70	2.0§	4.0m	.40		5	C	A157	FL14g
7	54LS670J	4	4	S	BTD	20n†	25n$	250m	0.0	5.0	.70	2.0§	4.0m	.40		5	C	A157	MLⓏ
8	54LS670W	4	4	S	BTD	20n†	25n$	250m	0.0	5.0	.70	2.0§	4.0m	.40		5	C	A157	FL14h
9	74LS170DC	4	4	S	BTD	20n†	25n$Ø	200m	0.0	5.0	.80	2.0Δ	4.0m	.40		0	7	A156	ML127e
10	74LS170FC	4	4	S	BTD	20n†	25n$Ø	200m	0.0	5.0	.80	2.0Δ	4.0m	.40		0	7	A156	FL14g
11	74LS170PC	4	4	S	BTD	20n†	25n$Ø	200m	0.0	5.0	.80	2.0Δ	4.0m	.40		0	7	A156	ML170
12	74LS670DC	4	4	S	BTD	20n†	25n$Ø	250m	0.0	5.0	.80	2.0§	4.0m	.40		0	7	A157	ML127k
13	74LS670FC	4	4	S	BTD	20n†	25n$Ø	250m	0.0	5.0	.80	2.0§	4.0m	.40		0	7	A157	FL14g
14	74LS670PC	4	4	S	BTD	20n†	25n$Ø	250m	0.0	5.0	.80	2.0§	4.0m	.40		0	7	A157	ML170
15♦	SN54LS170J	4	4	S§	BTD	20n†	25n*$	200m	0.0	5.0	.70	2.0	4.0m	.40		5	C	A156	ML61a
16♦	SN54LS170W	4	4	S§	BTD	20n†	25n*$	200m	0.0	5.0	.70	2.0	4.0m	.40		5	C	A156	FL34
17♦	SN54LS670J	4	4	S§	BTD	20n†	25n*$	250m	0.0	5.0	.70	2.0§	4.0m	.40		5	C	A157	ML61a
18♦	SN54LS670W	4	4	S§	BTD	20n†	25n*$	250m	0.0	5.0	.70	2.0§	4.0m	.40		5	C	A157	MO004AC
19♦	SN74LS170J	4	4	S§	BTD	20n†	25n*$	200m	0.0	5.0	.80	2.0	4.0m	.40		0	7	A156	ML157a
20♦	SN74LS170N	4	4	S§	BTD	20n†	25n*$	200m	0.0	5.0	.80	2.0	4.0m	.40		0	7	A156	ML209
21♦	SN74LS170W	4	4	S	BTD	20n†	25n*$	200m	0.0	5.0	.80	2.0	4.0m	.40		0	7	A156	FL34
22♦	SN74LS670J	4	4	S§	BTD	20n†	25n*$	250m	0.0	5.0	.80	2.0§	4.0m	.40		0	7	A157	ML157a
23♦	SN74LS670N	4	4	S§	BTD	20n†	25n*$	250m	0.0	5.0	.80	2.0§	4.0m	.40		0	7	A157	ML209
24♦	SN74LS670W	4	4	S§	BTD	20n†	25n*$	250m	0.0	5.0	.80	2.0§	4.0m	.40		0	7	A157	FL34
25	N74LS170N	4	4	S§	BTD	35n$	25n$	200m	0.0	5.0	.80	2.0	16m	.40		0	7	A141	MO001AE
26	N74LS670N	4	4	S	BTD	45n$	25n$	250m	0.0	5.0	.80	2.0§	16m	.40		0	7	A156	MO001AE
27	N74170B	4	4	S§	BTX		25n$	750m♦	0.0	5.0	.80	2.0	16m	.40		0	7	A141	ML132
28	N74170F	4	4	S§	BTX		25n$	750m♦	0.0	5.0	.80	2.0	16m	.40		0	7	A141	ML61d
29#	RC54170B	4	4	S§	BTX		25nØ	750m♦	0.0	5.0	.80	2.0	16m	.40		5	C	A141	ML132
30#	RC54170F	4	4	S§	BTX		25nØ	750m♦	0.0	5.0	.80	2.0	16m	.40		5	C	A141	ML61d
31#	RC54170W	4	4	S§	BTX		25nØ	750m♦	0.0	5.0	.80	2.0	16m	.40		5	C	A141	FL25
32	S54170B	4	4	S§	BTX		25nØ	750m♦	0.0	5.0	.80	2.0	16m	.40		5	C	A141	ML132
33	S54170F	4	4	S§	BTX		25nØ	750m♦	0.0	5.0	.80	2.0	16m	.40		5	C	A141	ML61d
34	S54170W	4	4	S§	BTX		25nØ	750m♦	0.0	5.0	.80	2.0	16m	.40		5	C	A141	FL25
35	9LS170DC	4	4	S	BTX	20n†	25n$Ø	210m♦	0.0	5.0	.80	2.0Δ	4.0m	.40		0	7	A156	ML127s
36	9LS170DM	4	4	S	BTX	20n†	25n$Ø	220m♦	0.0	5.0	.70	2.0Δ	4.0m	.40		5	C	A156	ML127s
37	9LS170FC	4	4	S	BTX	20n†	25n$Ø	210m♦	0.0	5.0	.80	2.0Δ	4.0m	.40		0	7	A156	FL14g
38	9LS170FM	4	4	S	BTX	20n†	25n$Ø	220m♦	0.0	5.0	.70	2.0Δ	4.0m	.40		5	C	A156	FL14g
39	9LS170PC	4	4	S	BTX	20n†	25n$Ø	210m♦	0.0	5.0	.80	2.0Δ	4.0m	.40		0	7	A156	ML170
40	9LS670DC	4	4	S	BTX	20n†	25n$Ø	262m♦	0.0	5.0	.80	2.0§	4.0m	.40		0	7	A157	ML127s
41	9LS670DM	4	4	S	BTX	20n†	25n$Ø	275m♦	0.0	5.0	.70	2.0§	4.0m	.40		5	C	A157	ML127s
42	9LS670FC	4	4	S	BTX	20n†	25n$Ø	262m♦	0.0	5.0	.80	2.0§	4.0m	.40		0	7	A157	FL14g
43	9LS670FM	4	4	S	BTX	20n†	25n$Ø	275m♦	0.0	5.0	.70	2.0§	4.0m	.40		5	C	A157	FL14g
44	9LS670PC	4	4	S	BTX	20n†	25n$Ø	262m♦	0.0	5.0	.80	2.0§	4.0m	.40		0	7	A157	ML170
45	54170DM	4	4	S	BTX	20n†Ø	25n$Ø	700m	0.0	5.0	.80	2.0Δ	16m	.40		5	C	A157	ML127e
46	54170FM	4	4	S	BTX	20n†Ø	25n$Ø	700m	0.0	5.0	.80	2.0Δ	16m	.40		5	C	A157	FL14g
47	74170DC	4	4	S	BTX	20n†Ø	25n$Ø	750m	0.0	5.0	.80	2.0Δ	16m	.40		0	7	A157	ML127e
48	74170FC	4	4	S	BTX	20n†Ø	25n$Ø	750m	0.0	5.0	.80	2.0Δ	16m	.40		0	7	A157	FL14g
49	74170PC	4	4	S	BTX	20n†Ø	25n$Ø	750m	0.0	5.0	.80	2.0Δ	16m	.40		0	7	A157	ML170
50#	M74LS170P	4	4	S	BTX	20n†	25n$Ø	262m	0.0	5.0	0.8	2.0	4.0m	0.4		0	7	A156	ML409
51#	M74LS630P	4	4	S	BTX	20n†	25n$Ø	262m	0.0	5.0	0.8	2.0	4.0m	0.4		0	7	A157	ML409
52#	M53284P	4	4	S	BTX	20n	60n	480m	0.0	5.0	.80	2.0	40m	.40		0	7	A84	ML5a
53#	M53370P	4	4	S§	BTX	20n†	25n$	787m	0.0	5.0	.80	2.0	16m	.40		0	7	A141	ML5a
54	N74LS170B	4	4	S	BTX	20n†	25n$	210m	0.0	5.0	.80	2.0Δ	8.0m	.50		0	7	A156	ML132
55	N74LS170F	4	4	S	BTX	20n†	25n$	210m	0.0	5.0	.80	2.0Δ	8.0m	.50		0	7	A156	ML127m
56▼#	RC54LS170F	4	4	S	BTX	20n†	25n$	210m	0.0	5.0	.80	2.0Δ	4.0m	.40		5	C	A156	ML127m
57▼#	RC54LS170W	4	4	S	BTX	20n†	25n$	210m	0.0	5.0	.80	2.0Δ	4.0m	.40		5	C	A156	FL25
58	S54LS170F	4	4	S	BTX	20n†	25n$	210m	0.0	5.0	.80	2.0Δ	4.0m	.40		5	C	A156	ML127m
59	S54LS170W	4	4	S	BTX	20n†	25n$	210m	0.0	5.0	.80	2.0Δ	4.0m	.40		5	C	A156	FL25
60	SN54170J	4	4	S§	BTX	20n†	25n*$	770m	0.0	5.0	.80	2.0	16m	.40		5	C	A141	ML61a
61	SN54170W	4	4	S§	BTX	20n†	25n*$	770m	0.0	5.0	.80	2.0	16m	.40		5	C	A141	MO004AC
62	SN74170J	4	4	S§	BTX	20n†	25n*$	787m	0.0	5.0	.80	2.0	16m	.40		0	7	A141	ML61a
63	SN74170N	4	4	S§	BTX	20n†	25n*$	787m	0.0	5.0	.80	2.0	16m	.40		0	7	A141	ML48
64#	uPB2170D	4	4	S	BTX	30n$†		630mⓏ	0.0	5.0	.80	2.0				2	7	PN16q	ML127s
65#	FLQ131-74170	4	4	S	BTX	40n	25n*	700m	0.0	5.0	.80	2.0	16m	.40		0	7	A141	MLⓏ
66#	FLQ135-84170	4	4	S	BTX	40n	25n*	700m	0.0	5.0	.80	2.0	16m	.40		2	8	A141	MLⓏ
67	N74170N	4	4	S§	BTX	45n$	25n$	750m	0.0	5.0	.80	2.0	16m	.40		0	7	A141	MO001AE
68	N74LS670B	4	4	S	BTX	50n$	25n$	250m	0.0	5.0	.80	2.0§	8.0m	.50		0	7	A156	ML132
69	N74LS670F	4	4	S	BTX	50n$	25n$	250m	0.0	5.0	.80	2.0§	8.0m	.50		0	7	A156	ML127m
70	S54LS670F	4	4	S	BTX	50n$	25n$	250m	0.0	5.0	.80	2.0§	4.0m	.40		5	C	A156	ML127m
71	S54LS670W	4	4	S	BTX	50n$	25n$	250m	0.0	5.0	.80	2.0§	4.0m	.40		5	C	A156	FL25
72	CD40108BD	4	4Δ	S	MCX	110n$	45n$	500mⓏ	0.0	15	4.0	11§	6.0m	1.5		5	C	PN24b	MO015AC
73	CD40108BE	4	4Δ	S	MCX	110n$	45n$	500mⓏ	0.0	15	4.0	11§	6.0m	1.5		4	8	PN24b	MO015AA
74▼	CD40108BH	4	4Δ	S	MCX	110n$	45n$		0.0	15	4.0	11§	6.0m	1.5		5	C	PN246	
75	CD40208BD	4	4Δ	S	MCX	170n	90n$	500mⓏ	0.0	15	4.0	11§	3.4m	1.5		5	C	A302	MO015AC
76	CD40208BE	4	4Δ	S	MCX	170n	90n$	500mⓏ	0.0	15	4.0	11§	3.4m	1.5		4	8	A302	MO015AA
77	CD40208BF	4	4Δ	S	MCX	170n	90n$	500mⓏ	0.0	15	4.0	11§	3.4m	1.5		5	C	A302	MO015AA
78	CD40208BH	4	4Δ	S	MCX	170n	90n$		0.0	15	4.0	11§	3.4m	1.5		5	C	A302	CH13
79	CD40108BF	4	4Δ	S	MCX	200n$	90n$	500mⓏ	0.0	15	4.0	11§	6.8m†	.50		5	C	A302	MO015AA
80	MC14580BAL	4	4Δ	S	MCX	1.0u$Ø	600n	400u♦Ø	0.0	10	3.0	7.0§	1.3m	.50		5	C	A205	ML150a
81▼#	HD14580B	4	4Δ	S	MCX	1.1u$			0.0	15	4.0	11§	3.0m	1.5		4	8	A205	
82	MC14580BCL	4	4Δ	S	MCX	1.5u$Ø	900n	4.0m♦Ø	0.0	10	3.0	7.0§	1.1m	.50		4	8	A205	ML150a
83	MC14580BCP	4	4Δ	S	MCX	1.5u$Ø	900n	4.0n♦Ø	0.0	10	3.0	7.0§	1.1m	.50		4	8	A205	ML39
84#	HBC4036AD	4	8	S	MCA	200n†	60n$	200mⓏ	0.0	10	.01%	4.99	250u%	.50		5	C	A110	ML23b
85#	HBC4039AD	4	8	S	MCA	200n†	60n$	200mⓏ	0.0	10	.01%	4.99	250u%	.50		5	C	A111	ML23b
86#	HBC4039AK	4	8	S	MCA	200n†	60n$	200mⓏ	0.0	10	.01%	4.99	250u%	.50		5	C	A111	FL28
87#	HBF4036AD	4	8	S	MCA	200n†	60n$	200mⓏ	0.0	10	.01%	4.99	250u%	.50		4	8	A110	ML23b
88#	HBF4036AE	4	8	S	MCA	200n†	60n$	200mⓏ	0.0	10	.01%	4.99	250u%	.50		4	8	A110	ML88g
89#	HBF4039AD	4	8	S	MCA	200n†	60n$	200mⓏ	0.0	10	.01%	4.99	250u%	.50		4	8	A111	ML23b
90#	HBF4039AE	4	8	S	MCA	200n†	60n$	200mⓏ	0.0	10	.01%	4.99	250u%	.50		4	8	A111	ML88g
91	CD4036AD	4	8	S	MCA	1.0uØ	125u†Ø	200mØⓏ	0.0	5.0	.050%	4.95	120u%	.50		5	C	A110	ML30e
92	CD4039AD	4	8	S	MCA	1.0uØ	125u†Ø	200mØⓏ	0.0	5.0	.050%	4.95	120u%	.50		5	C	A111	ML30e
93	CD4039AK	4	8	S	MCA	1.0uØ	125u†Ø	200mØⓏ	0.0	5.0	.050%	4.95	120u%	.50		5	C	A111	FL28
94#	HBC4036AK	4	8	S	MCA	1.0uØ	125u†Ø	200mØⓏ	0.0	5.0	.05%	4.95	120u%	.50		5	C	A110	FL28
95	MCM10143L	8	2	S	BEX	2.0n$	8.0n$	764mØ	5.2	0.0	-1.7	-0.9	50m#$			0	7	A134	ML319
96	N74172F	8	2	S§	BTX			850m♦	0.0	5.0	.80	2.0	16m	.40		0	7	A172	ML133
97	N74172N	8	2	S§	BTX			850m♦	0.0	5.0	.80	2.0	16m	.40		0	7	A172	ML135
98	S54S172F	8	2	S§	BTX			850m♦	0.0	5.0	.80	2.0	16m	.40		0	7	A172	ML133
99	S54S172N	8	2	S§	BTX			850m♦	0.0	5.0	.80	2.0	16m	.40		0	7	A172	ML135
100	SN74172J	8	2	S§	BTX	35n†	25n*$	850m	0.0	5.0	.80	2.0§	16m	.40		0	7	PN24a	MO015AA
101	SN74172N	8	2	S§	BTX	35n†	25n*$	850m	0.0	5.0	.80	2.0§	16m	.40		0	7	PN24a	ML72
102	N74S172F	8	2	S§	BTX	38n$	25n$	850m♦	0.0	5.0	.80	2.0	16m	.40		0	7	A172	ML133
103	N74S172N	8	2	S§	BTX	38n$	25n$	850m♦	0.0	5.0	.80	2.0	16m	.40		0	7	A172	ML135
104	N82S12F	8	4	S	BTD	40n	45n$	800m	0.0	5.0	.85	2.0Δ	9.6m	.45		1	7	A397	ML133
105	N82S12N	8	4	S	BTD	40n	45n$	800m	0.0	5.0	.85	2.0Δ	9.6m	.45		1	7	A397	ML135
106#	T153B1A	16	1	S				250m	0.0	7.0						0	7	A60	ML71c
107#	T153B1B	16	1	S				250m	0.0	7.0						0	7	A60	ML71c
108#	FLQ111-7481A	16	1	S	BTX	20n	30n$	325m	0.0	5.0	.80	2.0	40m	.40		0	7	A306	MLⓏ
109#	FLQ115-8481A	16	1	S	BTX	20n	30n$	325m	0.0	5.0	.80	2.0	40m	.40		2	8	A306	MLⓏ
110#	FLQ121-7484A	16	1	S	BTX	20n	30n$	325m	0.0	5.0	.80	2.0	40m	.40		0	7	A306a	MLⓏ

SYMBOLS AND CODES EXPLAINED IN INTERPRETER

2. READ-WRITE MEMORIES (RAMS)

IN ORDER OF (1)No.WORDS(2)No.BITS/WORD (3)MODE(4)STRUCT.(5)MAX ACC.TIME(6)TYPE No.

LINE No.	6 TYPE No.	ORGANIZATION 1 No. WORDS	2 BITS PER WORD	3 MODE	4 STRUCTURE CODE	5 MAX ACCESS TIME (s)	MAX WRITE CYCLE TIME (s)	MAX OPER. POWER DISS. (W)	RATED POWER SUP. SPAN NEG. (V)	POS. (V)	INPUT LOGIC LEVELS MAX '0' (V)	MIN '1' (V)	MIN OUTPUT SINK CURRENT (A)	@ OUT (V)	MIN CLOCK FREQ. (Hz)	OPER. TEMP. RANGE CODE -	+	DRAWINGS LOGIC/ BLOCK	OUTLINE
1#	FLQ125-8484A	16	1	S	BTX	20n	30n$	325m	0.0	5.0	.80	2.0	40m	.40		2	8	A306a	ML∅
2	SM82	16	1	S	BTX	20n	25n$	250m∅	0.0	5.0	1.0	2.1	40m	.45		0	7	A126	ML9
3	SM81	16	1	S	BTX	25n	25n$	250m∅	0.0	5.0	.85	2.2	20m	.45		5	C	A126	ML9
4	SM83	16	1	S	BTX	25n	25n$	250m∅	0.0	5.0	.85	2.2	20m	.45		0	7	A126	ML9
5	SN7481AJ	16	1	S	BTX	28n$	20n$	300m	0.0	5.0	.80	2.0	40m	.40		0	7	A27	ML66a
6	SN7481AN	16	1	S	BTX	28n$	20n$	300m	0.0	5.0	.80	2.0	40m	.40		0	7	A27	ML71
7	SN7484AJ	16	1	S	BTX	28n$	20n$	300m	0.0	5.0	.80	2.0	40m	.40		0	7	A67	ML61a
8	SN7484AN	16	1	S	BTX	28n$	20n$	300m	0.0	5.0	.80	2.0	40m	.40		0	7	A67	ML48
9	93407ADC	16	1	S	BTX	30n$	25n$∅	357m	0.0	5.0	.80	2.1	40m	.45		0	7	PN14b	TO116
10	93407AFC	16	1	S	BTX	30n$	25n$∅	357m	0.0	5.0	.80	2.1	40m	.45		0	7	PN14b	TO86
11	93407BDC	16	1	S	BTX	30n$	25n$∅	357m	0.0	5.0	.80	2.1	20m	.45		0	7	PN14b	TO116
12	93407BFC	16	1	S	BTX	30n$	25n$∅	357m	0.0	5.0	.80	2.1	20m	.45		0	7	PN14b	TO86
13	93407BDM	16	1	S	BTX	35n$	25n$∅	357m	0.0	5.0	.80	2.1	20m	.40		5	C	PN14b	TO116
14	93407BFM	16	1	S	BTX	35n$∅	25n$∅	357m	0.0	5.0	.80	2.1	20m	.40		5	C	PN14b	TO86
15	MC4004F	16	1	S	BTX	35n	25n$	250m♦†	0.0	5.0	.45%	2.5	40m	.45		0	7	A27	TO86
16	MC4004L	16	1	S	BTX	35n	25n$	250m†♦	0.0	5.0	.45%	2.5	40m	.45		0	7	A27	TO116
17	MC4004P	16	1	S	BTX	35n	25n$	250m♦†	0.0	5.0	.45%	2.5	40m	.45		0	7	A27	ML38
18	MC4005F	16	1	S	BTX	35n	25n$	250m♦†	0.0	5.0	.45%	2.5	20m	.45		0	7	A27	TO86
19	MC4005L	16	1	S	BTX	35n	25n$	250m†♦	0.0	5.0	.45%	2.5	20m	.45		0	7	A27	TO116
20	MC4005P	16	1	S	BTX	35n	25n$	250m†♦	0.0	5.0	.45%	2.5	20m	.45		0	7	A27	ML38
21	MC4304F	16	1	S	BTX	35n	25n$	250m†♦	0.0	5.0	.45%	2.5	40m	.45		5	C	A27	TO86
22	MC4304L	16	1	S	BTX	35n	25n$	250m†♦	0.0	5.0	.45%	2.5	40m	.45		5	C	A27	TO116
23	MC4305F	16	1	S	BTX	35n	25n$	250m†♦	0.0	5.0	.45%	2.5	20m	.45		5	C	A27	TO86
24	MC4305L	16	1	S	BTX	35n	25n$	250m†♦	0.0	5.0	.45%	2.5	20m	.45		5	C	A27	TO116
25	MC5484L	16	1	S	BTX	35n	60n*	250m†	0.0	5.0	.45%		40m	.45		5	C	A67	ML5
26	SN5481AJ	16	1	S	BTX	40n$	20n$	300m	0.0	5.0	.80	2.0	20m	.40		5	C	A27	ML66a
27	SN5481AW	16	1	S	BTX	40n$	20n$	300m	0.0	5.0	.80	2.0	20m	.40		5	C	A27	MO0004AA
28	SN5484AJ	16	1	S	BTX	40n$	20n$	300m	0.0	5.0	.80	2.0	20m	.40		5	C	A67	ML61a
29	SN5484AW	16	1	S	BTX	40n$	20n$	300m	0.0	5.0	.80	2.0	20m	.40		5	C	A67	MO0004AC
30#	T7481B1	16	1	S	BTX	60n	25n$	275m†	0.0	5.0	.40%	5.5	40m	.40		0	7	A84a	MO0001AE
31#	T7484B1	16	1	S	BTX	60n	25n$	275m†	0.0	5.0	.40†	5.5	40m	.40		0	7	A84	MO0001AC
32#	TM101	16	4	S		50n	35n$	500m	0.0	5.0	.80	2.0	100u△	2.4		0	7	A155	ML394
33	AM27S02ADC	16	4	S	BED	25n∅		500m	0.0	5.0	.80	2.0△				0	7	A382	ML312a
34	AM27S02APC	16	4	S	BED	25n∅		500m	0.0	5.0	.80	2.0△				0	7	A382	ML89d
35	AM27S03ADC	16	4	S	BED	25n∅		500m	0.0	5.0	.80	2.0§				0	7	A382	ML312a
36	AM27S03APC	16	4	S	BED	25n∅		500m	0.0	5.0	.80	2.0§				0	7	A382	ML89d
37	AM27S02ADM	16	4	S	BED	30n∅		525m	0.0	5.0	.80	2.0△				5	C	A382	ML312a
38	AM27S02AFM	16	4	S	BED	30n∅		525m	0.0	5.0	.80	2.0△				5	C	A382	FL33b
39	AM27S03ADM	16	4	S	BED	30n∅		525m	0.0	5.0	.80	2.0§				5	C	A382	ML312a
40	AM27S03AFM	16	4	S	BED	30n∅		525m	0.0	5.0	.80	2.0§				5	C	A382	FL33b
41	AM27LS02DC	16	4	S	BED	55n∅	30n$∅	175m	0.0	5.0	.80	2.0△				0	7	A382	ML312a
42	AM27LS02PC	16	4	S	BED	55n∅	30n$∅	175m	0.0	5.0	.80	2.0△				0	7	A382	ML89d
43	AM27LS03DC	16	4	S	BED	55n∅	45n$∅	175m	0.0	5.0	.80	2.0§	8.0m	.45		0	7	A382	ML312a
44	AM27LS03PC	16	4	S	BED	55n∅	45n$∅	175m	0.0	5.0	.80	2.0§	8.0m	.45		0	7	A382	ML89d
45	AM27LS02DM	16	4	S	BED	65n∅	35n$∅	190m	0.0	5.0	.80	2.0△				5	C	A382	ML312a
46	AM27LS02FM	16	4	S	BED	65n∅	35n$∅	190m	0.0	5.0	.80	2.0△				5	C	A382	FL33b
47	AM27LS03DM	16	4	S	BED	65n∅	55n$∅	190m	0.0	5.0	.80	2.0§	8.0m	.45		5	C	A382	ML312a
48	AM27LS03FM	16	4	S	BED	65n∅	55n$∅	190m	0.0	5.0	.80	2.0§	8.0m	.45		5	C	A382	FL33b
49	F100145DC	16	4	S	BEX	5.5n†	4.0n$	1.1	4.5	0.0	-1.4	-1.1				0	7	A345	ML133h
50	F100145FC	16	4	S	BEX	5.5n†	4.0n$	1.1	4.5	0.0	-1.4	-1.1				0	7	A345	FL48
51	10145F	16	4	S	BEX	8.5n†		754m	5.2	0.0	-1.6	-.96				3	8	PN16o	ML127m
52	10145I	16	4	S	BEX	8.5n†		754m	5.2	0.0	-1.6	-.96				3	8	PN16o	ML107
53	F10145ADC	16	4	S	BEX	9.0n	4.0n$	650m	5.2	0.0	-1.4	-1.1				0	7	A318	ML157d
54	F10145AFC	16	4	S	BEX	9.0n	4.0n$	650m	5.2	0.0	-1.4	-1.1				0	7	A318	FL14
55	F10145APC	16	4	S	BEX	9.0n	4.0n$	650m	5.2	0.0	-1.4	-1.1				0	7	A318	ML170
56	F10545ADM	16	4	S	BEX	9.0n	4.0n$	520m†♦	5.2	0.0	-1.4	-1.1	50m∅			5	C	A318	ML127s
57	F10545AFM	16	4	S	BEX	9.0n	4.0n$	520m†♦	5.2	0.0	-1.4	-1.1	50m∅			5	C	A318	FL14j
58	95400DC	16	4	S	BEX	12n†∅	9.0n$†	442m	5.2	0.0	-1.4	-1.1	50m∅			0	7	A81	ML15a
59▼#	HD10148	16	4	S	BEX	12n			5.2	0.0	1.85*%	.81#				3	8	A175a	
60#	GXB10145	16	4	S	BEX	13n∅	11n$	780m∅	5.2	0.0	-1.4	-1.1	50m∅			3	8	PN16o	ML176
61	MCM10145F	16	4	S	BEX	15n	8.0n$	650m	5.2	0.0	-1.4	-1.1	50m∅			0	7	A318	FL34
62	MCM10145L	16	4	S	BEX	15n	8.0n$	650m	5.2	0.0	-1.4	-1.1	50m∅			0	7	A318	ML157a
63	MCM10545F	16	4	S	BEX	18n	8.0n$	650m	5.2	0.0	-1.4	-1.1	50m∅			5	C	A318	FL34
64	MCM10545L	16	4	S	BEX	18n	8.0n$	650m	5.2	0.0	-1.4	-1.1	50m∅			5	C	A318	ML157a
65	54LS89DM	16	4	S	BTD				0.0	5.0	.70	2.0△	4.0m	.40		5	C	PN16aw	ML157e
66	54LS89FM	16	4	S	BTD				0.0	5.0	.70	2.0△	4.0m	.40		5	C	PN16aw	FL14j
67	74LS89DC	16	4	S	BTD				0.0	5.0	.80	2.0△	8.0m	.50		0	7	PN16aw	ML157e
68	74LS89FC	16	4	S	BTD				0.0	5.0	.80	2.0△	8.0m	.50		0	7	PN16aw	FL14j
69	74LS89PC	16	4	S	BTD				0.0	5.0	.80	2.0△	8.0m	.50		0	7	PN16aw	ML170
70	N74LS289F	16	4	S	BTD			185m	0.0	5.0	.80	2.0△	24m	.50		0	7	A73	ML127r
71	N74LS289N	16	4	S	BTD			185m	0.0	5.0	.80	2.0△	24m	.50		0	7	A73	MO0001AE
72	S54LS289F	16	4	S	BTD			225m	0.0	5.0	.80	2.0△	12m	.40		5	C	A73	ML127r
73	S54LS289W	16	4	S	BTD			225m	0.0	5.0	.80	2.0△	12m	.40		5	C	A73	FL14d
74	SN54LS89J	16	4	S	BTD				0.0	5.0	.70	2.0△	4.0m	.40		5	C	PN16aw	ML157a
75	SN54LS89W	16	4	S	BTD				0.0	5.0	.70	2.0△	4.0m	.40		5	C	PN16aw	FL34
76♦	SN54LS189J	16	4	S	BTD				0.0	5.0	.70	2.0§				5	C	PN16bc	ML157a
77♦	SN54LS189W	16	4	S	BTD				0.0	5.0	.70	2.0§				5	C	PN16bc	FL34
78	SN54LS219J	16	4	S	BTD				0.0	5.0	.70	2.0§				5	C	PN16bd	ML61a
79	SN54LS219W	16	4	S	BTD				0.0	5.0	.70	2.0§				5	C	PN16bd	MO0004AC
80	SN54LS289J	16	4	S	BTD				0.0	5.0	.70	2.0△				5	C	PN16bc	ML331
81♦	SN54LS289W	16	4	S	BTD				0.0	5.0	.70	2.0△				5	C	PN16bc	MO0004AC
82	SN54LS319J	16	4	S	BTD				0.0	5.0	.70	2.0△				5	C	PN16bd	ML61a
83	SN54LS319W	16	4	S	BTD				0.0	5.0	.70	2.0△				5	C	PN16bd	MO0004AC
84	SN74LS89J	16	4	S	BTD				0.0	5.0	.80	2.0△	8.0m	.50		0	7	PN16aw	ML157a
85	SN74LS89N	16	4	S	BTD				0.0	5.0	.80	2.0△	8.0m	.50		0	7	PN16aw	ML317
86	SN74LS89W	16	4	S	BTD				0.0	5.0	.80	2.0△	8.0m	.50		0	7	PN16aw	FL34
87♦	SN74LS189J	16	4	S	BTD				0.0	5.0	.80	2.0§				0	7	PN16bc	ML61a
88♦	SN74LS189N	16	4	S	BTD				0.0	5.0	.80	2.0§				0	7	PN16bc	ML317
89♦	SN74LS189W	16	4	S	BTD				0.0	5.0	.80	2.0§				0	7	PN16bc	FL34
90	SN74LS219J	16	4	S	BTD				0.0	5.0	.80	2.0§				0	7	PN16bd	ML61a
91	SN74LS219N	16	4	S	BTD				0.0	5.0	.80	2.0§				0	7	PN16bd	ML48
92♦	SN74LS289J	16	4	S	BTD				0.0	5.0	.80	2.0△				0	7	PN16bc	ML61a
93♦	SN74LS289N	16	4	S	BTD				0.0	5.0	.80	2.0△				0	7	PN16bc	ML209
94	SN74LS289W	16	4	S	BTD				0.0	5.0	.80	2.0△				0	7	PN16bc	FL63
95	SN74LS319J	16	4	S	BTD				0.0	5.0	.80	2.0△				0	7	PN16bd	ML61a
96	SN74LS319N	16	4	S	BTD				0.0	5.0	.80	2.0△				0	7	PN16bd	ML48
97	C3101ADM	16	4	S	BTD	17n	25n	500m	0.0	5.0	.70	2.0	3.6m	.30		5	C		MO∅
98	54F189DM	16	4	S	BTD	20n†	20n$		0.0	5.0		§§				5	C	A516	ML389d
99	54F189FM	16	4	S	BTD	20n†	20n$		0.0	5.0		§§				5	C	A516	FL14j
100	54F289DM	16	4	S	BTD	20n†	20n$		0.0	5.0		△△				5	C	A516	ML389d
101	54F289FM	16	4	S	BTD	20n†	20n$		0.0	5.0		△△				5	C	A516	FL14j
102	74F189DC	16	4	S	BTD	20n†	20n$		0.0	5.0		§§				0	7	A516	ML389d
103	74F189FC	16	4	S	BTD	20n†	20n$		0.0	5.0		§§				0	7	A516	FL14j
104♦	74F189PC	16	4	S	BTD	20n†	20n$		0.0	5.0		§§				0	7	A516	ML261
105	74F289DC	16	4	S	BTD	20n†	20n$		0.0	5.0		△△				0	7	A516	ML389d
106	74F289FC	16	4	S	BTD	20n†	20n$		0.0	5.0		△△				0	7	A516	FL14j
107	74F289PC	16	4	S	BTD	20n†	20n$		0.0	5.0		△△				0	7	A516	ML261
108	AM27S02DC	16	4	S	BTD	22n†	25n$	525m♦	0.0	5.0	.80	2.0	16m	.45		0	7	A388a	ML127k
109	AM27S02DM	16	4	S	BTD	22n†	25n$	525m♦	0.0	5.0	.80	2.0	16m	.45		5	C	A388a	ML62c
110	AM27S02FM	16	4	S	BTD	22n†	25n$	525m♦	0.0	5.0	.80	2.0	16m	.45		5	C	A388a	FL33b

SYMBOLS AND CODES EXPLAINED IN INTERPRETER

2. READ-WRITE MEMORIES (RAMS)

IN ORDER OF (1)No.WORDS(2)No.BITS/WORD (3)MODE(4)STRUCT.(5)MAX ACC.TIME(6)TYPE No.

LINE No.	6 TYPE No.	ORGANIZATION 1 No. WORDS	2 BITS PER WORD	3 MODE	4 STRUCTURE CODE	5 MAX ACCESS TIME (s)	MAX WRITE CYCLE TIME (s)	MAX OPER. POWER DISS. (W)	RATED POWER SUP. SPAN NEG. (V)	POS. (V)	INPUT LOGIC LEVELS MAX '0' (V)	MIN '1' (V)	MIN OUTPUT SINK CURRENT (A)	@ OUT (V)	MIN CLOCK FREQ. (Hz)	OPER. TEMP. RANGE CODE -	+	DRAWINGS LOGIC/ BLOCK	OUTLINE
1	AM27S02PC	16	4	S	BTD	22n†	25n$	525m♦	0.0	5.0	.80	2.0	16m	.45		0	7	A388a	ML89a
2	AM27S03DC	16	4	S	BTD	22n†	25n$	625m♦	0.0	5.0	.80	2.0§	16m	.45		0	7	A388a	ML127k
3	AM27S03DM	16	4	S	BTD	22n†	25n$	625m♦	0.0	5.0	.80	2.0§	16m	.45		5	C	A388a	ML62c
4	AM27S03FM	16	4	S	BTD	22n†	25n$	625m♦	0.0	5.0	.80	2.0§	16m	.45		5	C	A388a	FL33b
5	AM27S03PC	16	4	S	BTD	22n†	25n$	625m♦	0.0	5.0	.80	2.0§	16m	.45		0	7	A388a	ML89a
6	AM3101ADC	16	4	S	BTD	22n†	95n	525m	0.0	5.0	.80	2.0	16m	.45		0	7	A388a	ML62
7	AM3101ADM	16	4	S	BTD	22n†	25n$	525m	0.0	5.0	.80	2.0	16m	.45		5	C	A388a	ML62c
8	AM3101AFM	16	4	S	BTD	22n†	25n$	525m	0.0	5.0	.80	2.0	16m	.45		5	C	A388a	FL33b
9	AM3101APC	16	4	S	BTD	22n†	95n	525m	0.0	5.0	.80	2.0	16m	.45		0	7	A388a	ML89a
10	SN54S189J	16	4	S	BTD	25n†	25n$	550m	0.0	5.0	.80	2.0§				5	C	A388a	ML☐
11	SN54S189W	16	4	S	BTD	25n†	25n$	550m	0.0	5.0	.80	2.0§				5	C	A388a	FL☐
12	SN54S289J	16	4	S	BTD	25n†	25n$	550m	0.0	5.0	.80	2.0△				5	C	A388a	ML☐
13	SN54S289W	16	4	S	BTD	25n†	25n$	550m	0.0	5.0	.80	2.0△				5	C	A388a	FL☐
14	SN74S189J	16	4	S	BTD	25n†	25n$	550m	0.0	5.0	.80	2.0§				0	7	A388a	ML☐
15	SN74S189N	16	4	S	BTD	25n†	25n$	550m	0.0	5.0	.80	2.0§				0	7	A388a	ML☐
16	SN74S289J	16	4	S	BTD	25n†	25n$	550m	0.0	5.0	.80	2.0△				0	7	A388a	ML☐
17	SN74S289N	16	4	S	BTD	25n†	25n$	550m	0.0	5.0	.80	2.0△				0	7	A388a	ML☐
18	3101E	16	4	S	BTD	30n†	25n†	525m♦	0.0	5.0	.85	1.8	16m	.45		0	7	A132	ML62
19	31013E	16	4	S	BTD	30n†	25n†	525m♦	0.0	5.0	.90	1.7	16m	.45		5	C	A132	ML62
20	74S189DC	16	4	S	BTD	35n	20n$	550m	0.0	5.0	.80	2.0§	16m	.45		0	7	PN16bc	ML157e
21	74S189FC	16	4	S	BTD	35n	20n$	550m	0.0	5.0	.80	2.0§	16m	.45		0	7	PN16bc	FL14j
22	74S189PC	16	4	S	BTD	35n	20n$	550m	0.0	5.0	.80	2.0§	16m	.45		0	7	PN16bc	ML170
23	74S289DC	16	4	S	BTD	35n	20n$	525m	0.0	5.0	.80	2.0△	16m	.45		0	7	PN16bc	ML157e
24	74S289FC	16	4	S	BTD	35n	20n$	525m	0.0	5.0	.80	2.0△	16m	.45		0	7	PN16bc	FL14j
25	74S289PC	16	4	S	BTD	35n	20n$	525m	0.0	5.0	.80	2.0△	16m	.45		0	7	PN16bc	ML170
26	C3101A	16	4	S	BTD	35n	25n$	525m♦	0.0	5.0	.80	2.0	16m	.45		0	7	A388a	ML358
27	D3101A	16	4	S	BTD	35n	25n$	525m♦	0.0	5.0	.85	2.0	15m	.45		0	7	PN16a	ML359
28	N74S189F	16	4	S	BTD	35n	25n$	550m	0.0	5.0	.80	2.0§	16m	.45		0	7	A73	ML127r
29	N74S189N	16	4	S	BTD	35n	25n$	550m	0.0	5.0	.80	2.0§	16m	.45		0	7	A73	ML132
30	N3101AB	16	4	S	BTD	35n	25n	525m	0.0	5.0	.85	2.0△	16m	.45		0	7	A155	ML132
31	N3101AF	16	4	S	BTD	35n	25n$	525m	0.0	5.0	.85	2.0△	16m	.45		0	7	A73	ML127r
32	N3101AN	16	4	S	BTD	35n	25n$	525m	0.0	5.0	.85	2.0△	16m	.45		0	7	A73	ML132
33	P3101A	16	4	S	BTD	35n	25n$	525m♦	0.0	5.0	.85	2.0	15m	.45		0	7	PN16a	ML361
34#	SFC80101AK	16	4	S	BTD	35nØ	25nØ	525m	0.0	5.0	.85	2.0	15m	.45		0	8	PN16a	ML139
35	54LS189DM	16	4	S	BTD	37n†	25n$†	200m	0.0	5.0	.70	2.0§	4.0m	.40		5	C	PN16bc	ML157e
36	54LS189FM	16	4	S	BTD	37n†	25n$†	200m	0.0	5.0	.70	2.0§	4.0m	.40		5	C	PN16bc	FL14j
37	54LS289DM	16	4	S	BTD	37n†	25n$†	200m	0.0	5.0	.70	2.0△	4.0m	.40		5	C	PN16bc	ML157e
38	54LS289FM	16	4	S	BTD	37n†	25n$†	200m	0.0	5.0	.70	2.0△	4.0m	.40		5	C	PN16bc	FL14j
39	74LS189DC	16	4	S	BTD	37n†	25n$†	200m	0.0	5.0	.80	2.0§	8.0m	.50		0	7	PN16bc	ML157e
40	74LS189FC	16	4	S	BTD	37n†	25n$†	200m	0.0	5.0	.80	2.0§	8.0m	.50		0	7	PN16bc	FL14j
41	74LS189PC	16	4	S	BTD	37n†	25n$†	200m	0.0	5.0	.80	2.0§	8.0m	.50		0	7	PN16bc	ML170
42	74LS289DC	16	4	S	BTD	37n†	25n$†	200m	0.0	5.0	.80	2.0△	8.0m	.50		0	7	PN16bc	ML157e
43	74LS289FC	16	4	S	BTD	37n†	25n$†	200m	0.0	5.0	.80	2.0△	8.0m	.50		0	7	PN16bc	FL14j
44	74LS289PC	16	4	S	BTD	37n†	25n$†	200m	0.0	5.0	.80	2.0△	8.0m	.50		0	7	PN16bc	ML170
45	DM85S68D	16	4	S§	BTD	40n		500m	0.0	5.0	.80	2.0§	16m	.45		0	7	A294	ML115a
46	DM85S68N	16	4	S§	BTD	40n		500m	0.0	5.0	.80	2.0§	16m	.45		0	7	A294	ML196
47	54S189FM	16	4	S	BTD	50n	20n$	550m	0.0	5.0	.80	2.0§	16m	.50		5	C	PN16bc	FL14j
48	54S289DM	16	4	S	BTD	50n	20n$	525m	0.0	5.0	.80	2.0△	16m	.50		5	C	PN16bc	ML157e
49	54S289FM	16	4	S	BTD	50n	20n$	525m	0.0	5.0	.80	2.0△	16m	.50		5	C	PN16bc	FL14j
50	AM31013	16	4	S	BTD	50n	40n	500m	0.0	5.0	.90	1.7	16m	.45		5	C		MO☐
51	N74S89F	16	4	S	BTD	50n	30n$	525m	0.0	5.0	.80	2.0△	16m	.45		0	7	A73	ML127r
52	N74S89N	16	4	S	BTD	50n	30n$	525m	0.0	5.0	.85	2.0△	16m	.45		0	7	A73	ML132
53	N82S25B	16	4	S	BTD	50n	35n	6.2m%†	0.0	5.0	.85	2.0△	16m	.45		0	7	A73	ML132
54	N82S25F	16	4	S	BTD	50n	35n	6.2m%†	0.0	5.0	.85	2.0△	16m	.45		0	7	A73	ML127r
55	N82S25N	16	4	S	BTD	50n	30n$	525m	0.0	5.0	.85	2.0△	16m	.45		0	7	A73	ML132
56#	RC3101AF	16	4	S	BTD	50n	30n$	600m	0.0	5.0	.80	2.0△	16m	.50		5	C	A73	ML127r
57	S54S189F	16	4	S	BTD	50n	30n$	550m	0.0	5.0	.80	2.0§	16m	.50		5	C	A73	ML127r
58	S3101AF	16	4	S	BTD	50n	30n$	600m	0.0	5.0	.80	2.0△	16m	.50		5	C	A73	ML127r
59	9410DC	16	4	S	BTD	58n	26n	375m	0.0	5.0	.80	2.0	16m	.50		0	7	A431	ML194d
60	9410DM	16	4	S	BTD	58n	26n	375m	0.0	5.0	.80	2.0	8.0m	.40		5	C	A431	ML194d
61	93403DM	16	4	S	BTD	60n$	40n$	525m♦	0.0	5.0	.80	2.0	16m	.45		5	C	A132	ML62c
62	93403FM	16	4	S	BTD	60n$	40n$	525m♦	0.0	5.0	.80	2.0	16m	.45		5	C	A132	FL33
63	93403PC	16	4	S	BTD	60n$	40n$	525m♦	0.0	5.0	.80	2.0	16m	.45		0	7	A132	ML89a
64	AM3101DM	16	4	S	BTD	60n	40n$	525m	0.0	5.0	.80	2.0	16m	.45		5	C	A132	ML62c
65	AM3101FM	16	4	S	BTD	60n$	40n$	525m♦	0.0	5.0	.80	2.0	16m	.45		5	C	A132	FL33
66	C3101	16	4	S	BTD	60n	40n$	525m♦	0.0	5.0	.80	2.0	16m	.45		0	7	A132	ML358
67	C31013	16	4	S	BTD	60n$	40n$	525m♦	0.0	5.0	.80	2.0	16m	.45		5	C	A132	ML62c
68	D3101	16	4	S	BTD	60n	40n$	525m♦	0.0	5.0	.85	2.0	15m	.45		0	7	PN16a	ML359
69	MCM4064L	16	4	S	BTD	60n		551m	0.0	5.0	0.8	2.0				0	8	A493	ML317
70	MCM4364L	16	4	S	BTD	60n		551m	0.0	5.0	0.8	2.0				5	C	A493	ML317
71	P3101	16	4	S	BTD	60n	40n$	525m♦	0.0	5.0	.80	2.0	16m	.45		0	7	PN16a	ML361
72#	RC82S25F	16	4	S	BTD	60n	30n$	600m	0.0	5.0	.80	2.0△	16m	.50		5	C	A73	ML127r
73	S54S89F	16	4	S	BTD	60n	30n$	600m	0.0	5.0	.80	2.0△	16m	.50		5	C	A73	ML127r
74	S82S25F	16	4	S	BTD	60n	30n$	600m	0.0	5.0	.80	2.0△	16m	.50		5	C	A73	ML127r
75#	SFC80101K	16	4	S	BTD	60nØ	45nØ	525m	0.0	5.0	.85	2.0	15m	.45		0	8	PN16a	ML139
76	SN5489J	16	4	S	BTD	60n$	40n$	525m♦	0.0	5.0	.80	2.0	16m	.45		5	C	A132	ML62c
77	SN5489W	16	4	S	BTD	60n$	40n$	525m♦	0.0	5.0	.80	2.0	16m	.45		5	C	A132	FL33
78	AM31L01DM	16	4	S	BTD	70n†	100n	175m♦	0.0	5.0	.70	2.0	4.8m	.40		5	C	A132	ML62
79	AM31L01FM	16	4	S	BTD	70n†	135n†Ø	175m♦	0.0	5.0	.70	2.0	4.8m	.40		5	C	A132	FL33
80	AM31L01PC	16	4	S	BTD	70n†	135n†Ø	175m♦	0.0	5.0	.70	2.0	4.8m	.40		0	7	A132	ML89a
81	AM31L01E	16	4	S	BTD	105n	80n	200m	0.0	5.0	.70	2.0	3.6m	.30		0	7		MO☐
82	AM31L013E	16	4	S	BTD	105n	80n	200m	0.0	5.0	.70	2.0	3.6m	.30		5	C		MO☐
83#	M53289P	16	4	S	BTX	50nØ	40n$	375m†	0.0	5.0	.80	2.0	12m	.40		0	7	A68	ML5a
84	N7489B	16	4	S	BTX	50nØ	60nØ	550m	0.0	5.0	.80%	2.0	16m	.40		0	7	A73	ML85
85	N8225B	16	4	S	BTX	50nØ	40n	550m	0.0	5.0	.40%		16m	.40		0	7	A73	ML89a
86	N8225F	16	4	S	BTX	50nØ	40n	550m	0.0	5.0	.40%		16m	.40		0	7	A73	ML60a
87	N8225W	16	4	S	BTX	50nØ	40n	550m	0.0	5.0	.40%		16m	.40		0	7	A73	FL25
88	5489DM	16	4	S	BTX	60n$	40n$	525m	0.0	5.0	.80	2.0△	12m	.40		5	C	A184	ML127e
89	5489FM	16	4	S	BTX	60n$	40n$	525m	0.0	5.0	.80	2.0△	12m	.40		5	C	A184	FL14g
90	7489DC	16	4	S	BTX	60n$	40n$	525m	0.0	5.0	.80	2.0△	12m	.40		0	7	A184	ML127e
91	7489FC	16	4	S	BTX	60n$	40n$	525m	0.0	5.0	.80	2.0△	12m	.40		0	7	A184	FL14g
92	7489PC	16	4	S	BTX	60n$	40n$	525m	0.0	5.0	.80	2.0△	12m	.40		0	7	A184	ML170
93	93403DC	16	4	S	BTX	60nØ	45n$Ø	577m	0.0	5.0	.85	2.0	16m	.45		0	7	PN16bb	ML15a
94#	FLQ101-7489	16	4	S	BTX	60n	40n*	525m	0.0	5.0	.80	2.0	16m	.45		0	7	A305	ML☐
95#	FLQ105-8489	16	4	S	BTX	60n	40n*	525m	0.0	5.0	.80	2.0	16m	.45		2	8	A305	ML☐
96#	T165D1	16	4	S	BTX	60n	40n$	6.0m%	0.0	5.0	.85	2.0	15m	.45		0	8	A176	ML127d
97	AM31L01DC	16	4	S	BXD	70n†	100n	175m♦	0.0	5.0	.70	2.0	4.8m	.40		0	7	A132	ML62
98	MM54C89J	16	4	S	MCA	650n	300n$	4.5m☐	0.0	5.0	1.5	3.5§	17mØ	5.0		5	C	A182	ML1e
99	MM74C89J	16	4	S	MCA	650n	300n$	4.5m☐	0.0	5.0	1.5	3.5§	17mØ	5.0		4	8	A182	ML1e
100	MM74C89N	16	4	S	MCA	650n	300n$	4.5m☐	0.0	5.0	1.5	3.5§	1.7mØ	5.0		4	8	A182	ML1e
101	34725DC	16	4	S	MCX	70n$Ø	100n$Ø	300u♦	0.0	10	3.0	7.0§	1.2m	.50		4	8	A269	ML127s
102	34725DM	16	4	S	MCX	70n$Ø	100n$Ø	300u♦	0.0	10	3.0	7.0§	1.2m	.50		5	C	A269	ML127s
103	34725FC	16	4	S	MCX	70n$Ø	100n$Ø	300u♦	0.0	10	3.0	7.0§	1.2m	.50		4	8	A269	FL14g
104	34725FM	16	4	S	MCX	70n$Ø	100n$Ø	300u♦	0.0	10	3.0	7.0§	1.2m	.50		5	C	A269	FL14g
105	34725PC	16	4	S	MCX	70n$Ø	100n$Ø	300u♦	0.0	10	3.0	7.0§	1.2m	.50		4	8	A269	ML170
106	4725BDC	16	4	S	MCX	196n$	72n$	3.0m♦	0.0	10	3.0	7.0§	1.2m	.50		4	8	A343	ML157e
107	4725BDM	16	4	S	MCX	196n$	72n$	3.0m♦	0.0	10	3.0	7.0§	1.2m	.50		5	C	A343	ML157e
108	4725BFC	16	4	S	MCX	196n$	72n$	3.0m♦	0.0	10	3.0	7.0§	1.2m	.50		4	8	A343	FL14j
109	4725BFM	16	4	S	MCX	196n$	72n$	3.0m♦	0.0	10	3.0	7.0§	1.2m	.50		5	C	A343	FL14j
110	4725BPC	16	4	S	MCX	196n$	72n$	3.0m♦	0.0	10	3.0	7.0§	1.2m	.50		4	8	A343	ML170

SYMBOLS AND CODES EXPLAINED IN INTERPRETER

2. READ-WRITE MEMORIES (RAMS)

IN ORDER OF (1)No.WORDS(2)No.BITS/WORD (3)MODE(4)STRUCT.(5)MAX ACC.TIME(6)TYPE No.

LINE No.	6 TYPE No.	ORGANIZATION 1 No. WORDS	2 BITS PER WORD	3 MODE	4 STRUCTURE CODE	5 MAX ACCESS TIME (s)	MAX WRITE CYCLE TIME (s)	MAX OPER. POWER DISS. (W)	RATED POWER SUP. SPAN NEG. (V)	POS. (V)	INPUT LOGIC LEVELS MAX '0' (V)	MIN '1' (V)	MIN OUTPUT SINK CURRENT (A)	@ OUT (V)	MIN CLOCK FREQ. (Hz)	OPER. TEMP. RANGE CODE -	+	DRAWINGS LOGIC/ BLOCK	OUTLINE
1	MM54C989J	16	4	S	MCX	500nØ	140nØ$	500mⓂ	0.0	5.0	.80	3.5§				5	C	A182	MLⓂ
2	MM74C989J	16	4	S	MCX	500nØ	140nØ$	500mⓂ	0.0	5.0	.80	3.5§				4	8	A182	MLⓂ
3	MM74C989N	16	4	S	MCX	500nØ	140nØ$	500mⓂ	0.0	5.0	.80	3.5§				4	8	A182	MLⓂ
4	CD40114BD	16	8	S	MCX	650n	300n$	500m	0.5	20 #	1.5	2.5	3.0m	1.5		5	C	A496	MO001AE
5	CD40114BE	16	8	S	MCX	650n	300n$	500m	0.5	20 #	1.5	2.5	3.0m	1.5		4	8	A496	MO001AC
6	CD40114BF	16	8	S	MCX	650n	300n$	500m	0.5	20 #	1.5	2.5	3.0m	1.5		5	C	A496	MO001AC
7	CD40114BH	16	8	S	MCX	650n	300n$	500m	0.5	20 #	1.5	2.5	3.0m	1.5		5	C	A496	MO001AE
8	N82S21B	32	2	S	BTD	50n	15n$†	480mⓂ	0.0	5.2	.85	2.0	32m	.45		0	7	A92	ML85
9#	RC82S21F	32	2	S	BTD	50n	15n$†	835mⓂ	0.0	5.5						5	C	A92	ML127r
10	S82S21F	32	2	S	BTD	50n	15n$†	835mⓂ	0.0	5.5						5	C	A92	ML127r
11	N82S21F	32	2	S	BTX	50n	60n	650m	0.0	5.0	.85	2.0△	32m	.45		0	7	A92	ML127r
12	N82S21N	32	2	S	BTX	50n	60n	650m	0.0	5.0	.85	2.0△	32m	.45		0	7	A92	ML132
13	CDP1824CE	32	8	S	MCG	300n†	200n†		0.0	6.5	1.5	3.5§	1.8m	0.4		4	8	A498	ML295
14	CDP1824E	32	8	S	MCG	300n†	200n†		0.0	10	1.5	3.5§	1.8m	0.4		5	C	A498	ML295
15	CDP1824CD	32	8	S	MCX	400n	200n$	500m	0.5	7.0 #	.01	4.9	1.6m	.40		5	C	A498	ML25a
16	CDP1824D	32	8	S	MCX	400n	200n$	500m	0.5	15 #	.01	4.9	1.6m	.40		5	C	A498	ML25a
17▼	HCMP1824CD	32	8	S	MCX	400n	200n$	5.0m†	0.0	6.5	1.5	3.5	1.6m	.40		5	C	A500	
18▼	HCMP1824CP	32	8	S	MCX	400n	200n$	5.0m†	0.0	6.5	1.5	3.5	1.6m	.40		4	8	A500	
19▼	HCMP1824D	32	8	S	MCX	400n	200n$	5.0m†	0.0	12	3.0	7.0	1.6m	.40		5	C	A500	
20▼	HCMP1824P	32	8	S	MCX	400n	200n$	5.0m†	0.0	12	3.0	7.0	1.6m	.40		4	8	A500	
21	MCM10548F	64	1	S	BEX			520m	5.2	0.0	-1.4	-1.1	50mⓂ			5	C	A422	FL34
22	MCM10548L	64	1	S	BEX			520m	5.2	0.0	-1.4	-1.1	50mⓂ			5	C	A422	ML372
23	10142F	64	1	S	BEX	10nØ	3.5n$Ø	520m	5.2	0.0	-1.6%	-.96				3	8	A175a	ML127m
24	10142I	64	1	S	BEX	10nØ	3.5n$Ø	520m	5.2	0.0	-1.6%	-.96				3	8	A175a	ML107
25#	GXB10142	64	1	S	BEX	10nØ	10n$	520m	5.2	0.0	-1.4	-1.1	50mⓂ			0	7	A175a	
26	MCM10148F	64	1	S	BEX	10n†	8.0n$	420m	5.2	0.0	-1.7	-0.9	50m#$			0	7	A422	FL34
27	MCM10148L	64	1	S	BEX	10n†	8.0n$	420m	5.2	0.0	-1.7	-0.9	50m#$			0	7	A422	ML372
28	SN10142JE	64	1	S	BEX	10n	10n$	520m	5.2	0.0	-1.6	-.98				0	8	A177	ML140b
29	SN81002	64	1	S	BEX	10nØ	7.0n$	60m♦	5.2	0.0	-1.5	-1.0	-25mⓂ			0	7	A94	ML125
30#	uPB10142D	64	1	S	BEX	12n	6.0n$†	960m	5.2	0.0	-1.6	-.96				3	8	A439	ML60d
31	10140F	64	1	S	BEX	15n	10n$		5.2	0.0	-1.6%	-.96				3	8	A175	ML127m
32	10148F	64	1	S	BEX	15n	10n$		5.2	0.0	-1.6%	-.96				3	8	A175	ML127m
33	10151F	64	1	S	BEX	15n	10n$		5.2	0.0	-1.6%	-.96				3	8	A175	ML127m
34#	GXB10140	64	1	S	BEX	15nØ	10n$	520m	5.2	0.0	-1.4	-1.1	50mⓂ			0	7	A175a	
35#	GXB10148	64	1	S	BEX	15nØ	10n$	520m	5.2	0.0	-1.4	-1.1	50mⓂ			0	7	A175a	
36	MCM10148AL	64	1	S	BEX	15nØ	10n$Ø	420m†	5.2	0.0	-1.6%	-.96	40mⓂ			3	8	A126	ML98
37	SN10140JE	64	1	S	BEX	15n	10n$	520m	5.2	0.0	-1.6	-.98				0	8	A177	ML140b
38	SN10148JE	64	1	S	BEX	15n	10n$	520m	5.2	0.0	-1.6	-.98				0	8	A177	ML140b
39#	uPB10148D	64	1	S	BEX	15n	6.0n$†	960m	5.2	0.0	-1.6	7.0				3	8	A439	ML60d
40#	HEF4505BD	64	1	S	MCX	65n	200n	3.0m♦	0.0	15	4.0	11	3.0m	1.5		4	8	A66	ML93j
41#	HEF4505BP	64	1	S	MCX	65n	200n	3.0m♦	0.0	15	4.0	11	3.0m	1.5		4	8	A66	ML71g
42▼#	HD14505B	64	1	S	MCX	300n	415n		0.0	15	.05%	14.9				4	8	PN14ag	
43	MCM14505BAL	64	1	S	MCX	300n	415n	300u♦	0.0	15	.05%	14.9	1.7m	1.5		5	C	A66	ML328
44	MCM14505BCL	64	1	S	MCX	300n	415n	3.0m♦	0.0	15	.05%	14.9	750u	1.5		4	8	A66	ML328
45	MCM14505BCP	64	1	S	MCX	300n	415n	3.0m♦	0.0	15	.05%	14.9	750u	1.5		4	8	A66	ML329
46#	GXB100473	64	4	S	BEX	8.0n		.70	4.5	0.0			50nⓂ			0	8	A479	FL48
47	MM54C910J	64	4	S	MCA	500nØ	140n$Ø	1.5m	0.0	5.0	.80	3.5§	1.6m	.40		5	C	A290	ML115a
48	MM74C910J	64	4	S	MCA	500nØ	140n$Ø	1.5m	0.0	5.0	.80	3.5§	1.6m	.40		4	8	A290	ML115a
49	MM74C910N	64	4	S	MCA	500nØ	140n$Ø	1.5m	0.0	5.0	.80	3.5§	1.6m	.40		4	8	A290	ML196
50#	MN1203	64	4	S	MCG				.30	8.0	.80	2.4				2	6	A373	ML170
51	MCM14552AL	64	4	S	MCX	1.7uØ	1.7uØ	300u♦Ø	0.0	15	.05%	14.9§	2.4m	1.5		5	C	A166	ML319
52	MCM14552CL	64	4	S	MCX	1.7uØ	1.7uØ	3.0m♦Ø	0.0	15	.05%	14.9§	2.4m	1.5		4	8	A166	ML319
53	MCM14552CP	64	4	S	MCX	1.7uØ	1.7uØ	3.0m♦Ø	0.0	15	.05%	14.9§	2.4m	1.5		4	8	A166	ML39
54▼#	HD14552B	64	4	S	MCX	1.7m	1.6m		0.0	15	4.0	11	3.0m	1.5		4	8	A166	
55	TMS4036NL	64	8	S	MNG	1.0u	1.0u*	450m	0.0	5.0	.80	2.2§	1.9m	.40		0	7	A237	MLⓂ
56#	RC82S09I	64	9		BTD	80n	75n	1.3m%†	0.0	5.0	.80	2.2△	6.4m	.50		5	C	A396	ML218b
57	N82S19I	64	9	S		35n	45n	1.3m%†			.85	2.0△	400u△	5.5		0	7	A396	ML218b
58#	N82S09AI	64	9	S	BTD	35n	35n	1.3m%†	0.0	5.0	.85	2.0△	8.0m	.50		0	7	A396	ML218b
59#	N82S09AN	64	9	S	BTD	35n	35n$	950m	0.0	5.0	.85	2.0△	8.0m	.50		0	7	A396	ML290
60	N82S19F	64	9	S	BTD	35n	20n%	1.3m%	0.0	5.0	.85	2.0§	40u△	5.5		0	7	A396	MLⓂ
61	N82S19N	64	9	S	BTD	35n	20n%	1.3m%	0.0	5.0	.85	2.0§	40u△	5.5		0	7	A396	MLⓂ
62	N82S09I	64	9	S	BTD	45n	45n	1.3m%†	0.0	5.0	.85	2.0△	6.4m	.50		0	7	A396	ML218
63	N82S09N	64	9	S	BTD	45n	35n$	950m	0.0	5.0	.85	2.0△	6.4m	.50		0	7	A396	ML290
64#	S82S09AI	64	9	S	BTD	55n	55n	1.0	0.0	5.0	.80	2.2△	8.0m	.50		5	C	A396a	ML218b
65	S82S09I	64	9	S	BTD	80n	75n	1.3m%†	0.0	5.0	.80	2.2△	6.4m	.50		5	C	A396	ML218b
66	S82S09N	64	9	S	BTD	80n	50n$	1.0	0.0	5.0	.80	2.2△	6.4m	.50		5	C	A396	ML290
67	93419DC	64	9	S	BTX	45n	35n$	725mt	0.0	5.0	.80	2.1△	8.0m	.50		0	7	A194	ML192
68#	MBM93419	64	9	S	BTX	45n	35n$	1.3m%	0.0	5.0	.80	2.1△	12m	.50		0	7	A332	ML199
69	93419DM	64	9	S	BTX	60n	45n$	725mt	0.0	5.0	.80	2.1△	8.0m	.50		5	C	A194	ML192
70	HM6511-2	64	12	S	MCG			20m	0.0	5.0	.80	3.0				5	C	A454	
71	HM6511-9	64	12	S	MCG			20m	0.0	5.0	.80	3.0				4	8	A454	
72	HM6511C9	64	12	S	MCG			20m	0.0	5.0	.80	3.0				4	8	A454	
73	HM6512-2	64	12	S	MCG			20m	0.0	5.0	.80	3.0				5	C	A296	
74	HM6512-9	64	12	S	MCG			20m	0.0	5.0	.80	3.0				4	8	A296	
75	HM6512C9	64	12	S	MCG			20m	0.0	5.0	.80	3.0				4	8	A296	
76	IM6512A-IDN	64	12	S	MCG	150n	245n	5.0m	0.0	10	2.0	7.0§	1.0u△			4	8	A296	ML134e
77	IM6512A-IJN	64	12	S	MCG	150n	245n	5.0m	0.0	10	2.0	7.0§	1.0u△			4	8	A296	ML226a
78	IM6512A-MDN	64	12	S	MCG	150n	245n	5.0m	0.0	10	2.0	7.0§	1.0u△			5	C	A296	ML134e
79	IM6512A-MFN	64	12	S	MCG	150n	245n	5.0m	0.0	10	2.0	7.0§	1.0u△			5	C	A296	FL46
80	IM6512A-MJN	64	12	S	MCG	150n	245n	5.0m	0.0	10	2.0	7.0§	1.0u△			5	C	A296	ML226a
81	IM6512IDN	64	12	S	MCG	460n	760n	500u	0.0	5.0	.80	3.0§	2.0m	.45		4	8	A296	ML134e
82	IM6512IJN	64	12	S	MCG	460n	760n	500u	0.0	5.0	.80	3.0§	2.0m	.45		4	8	A296	ML226a
83	IM6512MDN	64	12	S	MCG	460n	760n	500u	0.0	5.0	.80	3.0§	2.0m	.45		5	C	A296	ML134e
84	IM6512MFN	64	12	S	MCG	460n	760n	500u	0.0	5.0	.80	3.0§	2.0m	.45		5	C	A296	FL46
85	IM6512MJN	64	12	S	MCG	460n	760n	500u	0.0	5.0	.80	3.0§	2.0m	.45		5	C	A296	ML226a
86	IM6512CJN	64	12	S	MCG	600n	995n	4.0m	0.0	5.0	.80	3.5§	1.6m	.45		0	7	A296	ML226a
87	IM4116-2CDE	128	%	D	MNG	150n	375 *△	1.0 Ⓜ	5	12	.80	2.4§	10u△			0	7	A351	ML395
88	IM4116-2CJE	128	%	D	MNG	150n	375 *△	1.0 Ⓜ	5	12	.80	2.4§	10u△			0	7	A351	ML396
89	IM4116-2CPE	128	%	D	MNG	150n	375 *△	1.0 Ⓜ	5	12	.80	2.4§	10u△			0	7	A351	ML399
90	IM4116-3CDE	128	%	D	MNG	200n	375n△*	1.0 Ⓜ	5	12	.80	2.4§	10u△			0	7	A351	ML395
91	IM4116-3CJE	128	%	D	MNG	200n	375n△*	1.0 Ⓜ	5	12	.80	2.4§	10u△			0	7	A351	ML396
92	IM4116-3CPE	128	%	D	MNG	200n	375n△*	1.0 Ⓜ	5	12	.80	2.4§	10u△			0	7	A351	ML399
93	IM4116-4CDE	128	%	D	MNG	250n	515 △*	1.0 Ⓜ	5	12	.80	2.4§	10u△			0	7	A351	ML395
94	IM4116-4CJE	128	%	D	MNG	250n	515 △*	1.0 Ⓜ	5	12	.80	2.4§	10u△			0	7	A351	ML396
95	IM4116-4CPE	128	%	D	MNG	250n	515 △*	1.0 Ⓜ	5	12	.80	2.4§	10u△			0	7	A351	ML399
96	MCM10547F	128	1	S	BEX			520m	5.2	0.0	-1.4	-1.1	50mⓂ			5	C	A421	FL34
97	MCM10547L	128	1	S	BEX			520m	5.2	0.0	-1.4	-1.1	50mⓂ			5	C	A421	ML372
98▼#	HD10147	128	1	S	BEX	8.0n			5.2	0.0	1.85*%	.81#				3	8	A536	
99	MCM10147F	128	1	S	BEX	10n†	8.0n$	420m	5.2	0.0	-1.7	-0.9	50m#$			0	7	A421	FL34
100	MCM10147L	128	1	S	BEX	10n†	8.0n$	420m	5.2	0.0	-1.7	-0.9	50m#$			0	7	A421	ML372
101#	GXB10147A	128	1	S	BEX	12nØ	8.0n	520m♦	5.2	0.0	-1.4	-1.1				0	8	A136	ML140d
102	F10405DC	128	1	S	BEX	15n	8.0n$	468m	5.2	0.0	-1.4	-1.1				0	7	A128	ML1k
103	F10405FC	128	1	S	BEX	15n	8.0n$	468m	5.2	0.0	-1.4	-1.1				0	7	A128	FL14
104	SN10147JE	128	1	S	BEX	15n	8.0n$	520m	5.2	0.0	-1.6	-.98				0	8	A180	ML140b
105	S68B10	128	8	S	BNG	250n	250n*	400m	0.0	5.0			1.0m	.40		0	7	A457	MLⓂ
106	S68A10	128	8	S	BNG	360n	360n*	400m	0.0	5.0			1.0m	.40		0	7	A457	MLⓂ
107▼	NSC810IJ	128	8	S	MCG	250n$	200n$	1.0	0.0	5.0	1.5	3.5	2.0m	0.4		4	8	A535	ML435
108▼	NSC810IN	128	8	S	MCG	250n$	200n$	1.0	0.0	5.0	1.5	3.5	2.0m	0.4		4	8	A535	ML436
109▼	NSC810J	128	8	S	MCG	250n$	200n$	1.0	0.0	5.0	1.5	3.5	2.0m	0.4		0	7	A535	ML435
110▼	NSC810N	128	8	S	MCG	250n$	200n$	1.0	0.0	5.0	1.5	3.5	2.0m	0.4		0	7	A535	ML436

SYMBOLS AND CODES EXPLAINED IN INTERPRETER

2. READ-WRITE MEMORIES (RAMS)

IN ORDER OF (1)No.WORDS(2)No.BITS/WORD (3)MODE(4)STRUCT.(5)MAX ACC.TIME(6)TYPE No.

LINE No.	6 TYPE No.	ORGANIZATION 1 No. WORDS	2 BITS PER WORD	3 MODE	4 STRUCTURE CODE	5 MAX ACCESS TIME (s)	MAX WRITE CYCLE TIME (s)	MAX OPER. POWER DISS. (W)	RATED POWER SUP. SPAN NEG. (V)	RATED POWER SUP. SPAN POS. (V)	INPUT LOGIC LEVELS MAX '0' (V)	INPUT LOGIC LEVELS MIN '1' (V)	MIN OUTPUT SINK CURRENT (A)	MIN OUTPUT SINK CURRENT @ OUT (V)	MIN CLOCK FREQ. (Hz)	OPER. TEMP. RANGE CODE -	OPER. TEMP. RANGE CODE +	DRAWINGS LOGIC/ BLOCK	DRAWINGS OUTLINE
1	CDP1823CD	128	8	S	MCS	275nt	400n*		0.6	6.5	1.5	3.5§	2.0m	0.4		5	C	A525	
2♦	CDP1823CE	128	8	S	MCS	275nt	400n*		0.6	6.5	1.5	3.5§	2.0m	0.4		4	8	A525	MO015AA
3	CDP1823D	128	8	S	MCS	275nt	400n*		0.0	10	1.5	3.5§	2.0m	0.4		5	C	A525	
4♦	CDP1823E	128	8	S	MCS	275nt	400n*		0.0	10	1.5	3.5§	2.0m	0.4		4	8	A525	MO015AA
5	MCM6810ACL1	128	8	S	MNG			400m	0.0	5.0	0.8	2.0				4	8	A384	ML256
6	MCM6810ACL	128	8	S	MNG			400m	0.0	5.0	0.8	2.0				4	8	A384	ML256
7	MCM6810AL1	128	8	S	MNG			400m	0.0	5.0	0.8	2.0				0	6	A384	ML256
8	MCM6810AL	128	8	S	MNG			350m	0.0	5.0	0.8	2.0				0	6	A384	ML256
9	MCM6810AP1	128	8	S	MNG			400m	0.0	5.0	0.8	2.0				0	6	A384	ML133
10	MCM6810AP	128	8	S	MNG			350m	0.0	5.0	0.8	2.0				0	6	A384	ML133
11	MCM6810CJCS	128	8	S	MNG			420m	0.0	5.0	0.8	2.0§				5	C	A384	DL☑
12#	EF68B10C	128	8	S	MNG	250n	250n*		0.0	5.0	0.8	2.0§	1.6m	0.4	2.0M	0	7	A384	
13♦#	EF68B10P	128	8	S	MNG	250n	250n*		0.0	5.0	0.8	2.0§	1.6m	0.4	2.0M	0	7	A384	ML420
14	MCM68B10L	128	8	S	MNG	250n	250n*	500m	0.0	5.0	.80	2.0§	1.6m	.40		0	7	A384	ML320
15	MCM68B10P	128	8	S	MNG	250n	250n*	500m	0.0	5.0	.80	2.0§	1.6m	.40		0	7	A384	ML39
16♦#	EF68A10C	128	8	S	MNG	360n	360n*		0.0	5.0	0.8	2.0§	1.6m	0.4	1.5M	0	7	A384	ML420
17♦#	EF68A10CP	128	8	S	MNG	360n	360n*		0.0	5.0	0.8	2.0§	1.6m	0.4	1.5M	4	8	A384	ML420
18#	EF68A10CV	128	8	S	MNG	360n	360n*		0.0	5.0	0.8	2.0§	1.6m	0.4	1.5M	4	8	A384	
19♦#	EF68A10P	128	8	S	MNG	360n	360n*		0.0	5.0	0.8	2.0§	1.6m	0.4	1.5M	0	7	A384	ML420
20#	HM468A10	128	8	S	MNG	360n	360n*	350m	0.0	5.0	.80	2.0	1.6m	.40		2	7	A223	ML287
21#	HM468A10P	128	8	S	MNG	360n	360n*	350m	0.0	5.0	.80	2.0	1.6m	.40		2	7	A223	ML288
22	MCM68A10CL	128	8	S	MNG	360n	360n*	500m	0.0	5.0	.80	2.0§	1.6m	.40		4	8	A384	ML320
23	MCM68A10CP	128	8	S	MNG	360n	360n*	500m	0.0	5.0	.80	2.0§	1.6m	.40		4	8	A384	ML39
24	MCM68A10L	128	8	S	MNG	360n	360n*	500m	0.0	5.0	.80	2.0§	1.6m	.40		0	7	A384	ML320
25	MCM68A10P	128	8	S	MNG	360n	360n*	500m	0.0	5.0	.80	2.0§	1.6m	.40		0	7	A384	ML39
26#	EF6810C	128	8	S	MNG	450n	450n		0.0	5.0	0.8	2.0§	1.6m	0.4	1.0M	0	7	A384	
27♦#	EF6810CMB	128	8	S	MNG	450n	450n*		0.0	5.0	0.8	2.0§	1.6m	0.4	1.0M	5	C	A384	ML420
28♦#	EF6810CP	128	8	S	MNG	450n	450n		0.0	5.0	0.8	2.0§	1.6m	0.4	1.0M	4	8	A384	ML420
29#	EF6810CV	128	8	S	MNG	450n	450n		0.0	5.0	0.8	2.0§	1.6m	0.4	1.0M	4	8	A384	
30♦#	EF6810P	128	8	S	MNG	450n	450n		0.0	5.0	0.8	2.0§	1.6m	0.4	1.0M	0	7	A384	ML420
31#	HM46810	128	8	S	MNG	450n	450n*	350m	0.0	5.0	.80	2.0	1.6m	.40		2	7	A223	ML287
32#	HM46810P	128	8	S	MNG	450n	450n*	350m	0.0	5.0	.80	2.0	1.6m	.40		2	7	A223	ML288
33	MCM6810BJCS	128	8	S	MNG	450n	450n*	500m	0.0	5.0	.80	2.0§	1.6m	.40		5	C	A384	ML☑
34	MCM6810CL	128	8	S	MNG	450n	450n*	500m	0.0	5.0	.80	2.0§	1.6m	.40		4	8	A384	ML320
35	MCM6810CP	128	8	S	MNG	450n	450n*	500m	0.0	5.0	.80	2.0§	1.6m	.40		4	8	A384	ML39
36	MCM6810L	128	8	S	MNG	450n	450n*	500m	0.0	5.0	.80	2.0§	1.6m	.40		0	7	A384	ML320
37	MCM6810P	128	8	S	MNG	450n	450n*	500m	0.0	5.0	.80	2.0§	1.6m	.40		0	7	A384	ML39
38#	RC54S201F	256	1		BTD	70n	60n	650m	0.0	5.0	.80	2.0§	16m	.50		5	C	A243	ML127r
39#	RC54S301F	256	1		BTD	70n	60n	650m	0.0	5.0	.80	2.0△	16m	.50		5	C	A243	ML127r
40	MCM10552F	256	1	S	BEX			676m	5.2	0.0	-1.4	-1.1	50m☑			5	C	A165	FL34
41	MCM10552L	256	1	S	BEX			676m	5.2	0.0	-1.4	-1.1	50m☑			5	C	A165	ML372
42#	HM10414-1	256	1	S	BEX	6.0nt	6.0n$	520n	5.2	0.0	1.4	1.1	30m☑			0	7	A150	ML89
43	F10414DC	256	1	S	BEX	7.0nt	6.0n$	520m	5.2	0.0	-1.4	-1.1	30m☑			0	7	A150	ML1k
44	F10414FC	256	1	S	BEX	7.0nt	6.0n$	520m	5.2	0.0	-1.4	-1.1	30m☑			0	7	A150	FL14
45	F100414DC	256	1	S	BEX	7.0nt	6.0n$	520m	5.2	0.0	-1.4	-1.1	30m☑			0	8	A150	ML1k
46	F100414FC	256	1	S	BEX	7.0nt	60n$	520m	5.2	0.0	-1.4	-1.1	30m☑			0	8	A150	FL14
47#	HM10414	256	1	S	BEX	7.0nt	6.0n$	520n	5.2	0.0	1.4	1.1	30m☑			0	7	A150	ML89
48	DM10414J	256	1	S	BEX	12n	6.0n$	520m	5.2	0.0	-1.4	-1.1	30m☑			0	7	A150	ML127k
49	DM10414N	256	1	S	BEX	12n	6.0n$	520m	5.2	0.0	-1.4	-1.1	30m☑			0	7	A150	ML178
50#	HM2106	256	1	S	BEX	15n	10n$	1.8m%	5.2	0.0	-1.4	-1.1	30m☑			0	7	A150	ML89g
51	MCM10152F	256	1	S	BEX	15n	10n$	676m	5.2	0.0	-1.4	-1.1	50m☑			0	7	A165	FL34
52	MCM10152L	256	1	S	BEX	15n	10n$	676m	5.2	0.0	-1.4	-1.1	50m☑			0	7	A165	ML372
53#	uPB10144D	256	1	S	BEX	25n		800m	5.2	0.0	-1.6	-.96				3	8	A440	ML60d
54	MCM10144F	256	1	S	BEX	26n	25n$	676m	5.2	0.0	-1.4	-1.1	50m☑			0	7	A165	FL34
55	MCM10144L	256	1	S	BEX	26n	25n$	676m	5.2	0.0	-1.4	-1.1	50m☑			0	7	A165	ML372
56	MCM10544F	256	1	S	BEX	26n	25n$	676m	5.2	0.0	-1.4	-1.1	50m☑			5	C	A165	ML317
57	MCM10544L	256	1	S	BEX	26n	25n$	676m	5.2	0.0	-1.4	-1.1	50m☑			5	C	A165	ML372
58	F10410DC	256	1	S	BEX	30n	25n$	676m	5.2	0.0	-1.4	-1.1				0	7	A150	ML127s
59	F10410FC	256	1	S	BEX	30n	25n$	676m	5.2	0.0	-1.4	-1.1				0	7	A150	FL14
60	F10410PC	256	1	S	BEX	30n	25n$	676m	5.2	0.0	-1.4	-1.1				0	7	A150	ML170
61#	GXB10144	256	1	S	BEX	30nØ	22n$	582m	5.2	0.0	-1.4	-1.1	50m☑			3	8	A178	ML127x
62	F10411DC	256	1	S	BEX	35n	30n$	650m	5.2	0.0	-1.4	-1.0	30m☑			0	7	A150	ML127s
63	F10411FC	256	1	S	BEX	35n	30n$	650m	5.2	0.0	-1.4	-1.0	30m☑			0	7	A150	FL14
64	F10411PC	256	1	S	BEX	35n	30n$	650m	5.2	0.0	-1.4	-1.0	30m☑			0	7	A150	ML170
65#	HM2105	256	1	S	BEX	35n	25n$	1.8m%	5.2	0.0	-1.4	-1.1	30m☑			0	7	A150	ML89g
66	SN10144JE	256	1	S	BEX	35n	25n$	650m	5.2	0.0	-1.6	-.98				0	8	A178	ML140b
67#	SFC80106AK	256	1	S	BTC	60n	75n	620m	0.0	5.0	.85	2.0§	15m	.45		5	C		ML2
68#	SFC80107K	256	1	S	BTC	60n	75n	620m	0.0	5.0	.85	2.0	15m	.45		5	C		ML2
69	AM29720DM	256	1	S	BTD		55n△*	350m	0.0	5.0	.80	2.0				5	C		
70	AM29720FM	256	1	S	BTD		55n△*	350m	0.0	5.0	.80	2.0				5	C		
71	AM29720PC	256	1	S	BTD		45n△*	350m	0.0	5.0	.80	2.0				0	7		
72	AM29721DC	256	1	S	BTD		45n△*	350m	0.0	5.0	.80	2.0§				0	7		
73	AM29721DM	256	1	S	BTD		55n△*	350m	0.0	5.0	.80	2.0§				5	C		
74	AM29721FM	256	1	S	BTD		55n△*	350m	0.0	5.0	.80	2.0				5	C		
75▼	AM29721PC	256	1	S	BTD		55n△*	350m	0.0	5.0	.80	2.0				0	7		
76	SN54S301J	256	1	S	BTD		100nt△	775m	0.0	5.0	0.8	2.0				5	C		
77	SN54S301W	256	1	S	BTD		100nt△	775m	0.0	5.0	0.8	2.0				5	C		
78	SN74S201J	256	1	S	BTD		65nt△	700m	0.0	5.0	0.8	2.0§				0	7		
79	SN74S201N	256	1	S	BTD		65nt△	700m	0.0	5.0	0.8	2.0§				0	7		
80	SN74S301J	256	1	S	BTD		65nt△	700m	0.0	5.0	0.8	2.0				0	7		
81	SN74S301N	256	1	S	BTD		65nt△	700m	0.0	5.0	0.8	2.0				0	7		
82	SN54LS202J	256	1	S	BTD	35ntØ	15nt$	275mt	0.0	5.0	.80	2.0§	16m	.50		5	C	PN16aj	ML61a
83	SN54LS202W	256	1	S	BTD	35ntØ	15nt$	275mt	0.0	5.0	.80	2.0§	16m	.50		5	C	PN16aj	MO004AC
84	SN54LS302J	256	1	S	BTD	35ntØ	15nt$	275mt	0.0	5.0	.80	2.0△	16m	.50		5	C	PN16aj	ML61a
85	SN54LS302W	256	1	S	BTD	35ntØ	15nt$	275mt	0.0	5.0	.80	2.0△	16m	.50		5	C	PN16aj	MO004AC
86	SN74LS202J	256	1	S	BTD	35ntØ	15nt$	275mt	0.0	5.0	.80	2.0§	16m	.45		0	6	PN16aj	ML61a
87	SN74LS202N	256	1	S	BTD	35ntØ	15nt$	275mt	0.0	5.0	.80	2.0§	16m	.45		0	6	PN16aj	ML48
88	SN74LS302J	256	1	S	BTD	35ntØ	15nt$	275mt	0.0	5.0	.80	2.0△	16m	.45		0	6	PN16aj	ML61a
89	SN74LS302N	256	1	S	BTD	35ntØ	15nt$	275mt	0.0	5.0	.80	2.0△	16m	.45		0	6	PN16aj	ML48
90	N82S16F	256	1	S	BTD	40n	25n	1.5m%t	0.0	5.0	.85	2.0§	16m	.45		0	7	A243	ML127r
91	N82S16N	256	1	S	BTD	40n	30n$	600m	0.0	5.0	.85	2.0§	16m	.45		0	7	A243	ML132
92	N82S17F	256	1	S	BTD	40n	25n	1.5m%t	0.0	5.0	.85	2.0△	16m	.45		0	7	A243	ML127r
93	N82S116B	256	1	S	BTD	40n	25n	603m	0.0	5.0	.85	2.0§	16m	.45		0	7	A243	ML132
94	N82S116F	256	1	S	BTD	40n	25n	1.5m%t	0.0	5.0	.85	2.0§	16m	.45		0	7	A243	ML127r
95	N82S116N	256	1	S	BTD	40n	25n$	350m	0.0	5.0	.85	2.0§	16m	.45		0	7	A243	ML132
96	N82S117B	256	1	S	BTD	40n	25n	603m	0.0	5.0	.85	2.0△	16m	.45		0	7	A243	ML132
97#	RC82S116F	256	1	S	BTD	40n	25n	575m	0.0	5.0	.85	2.0§	16m	.45		5	C	A243	ML127r
98#	RC82S117F	256	1	S	BTD	40n	25n	575m	0.0	5.0	.85	2.0△	16m	.45		5	C	A243	ML127r
99	S82S116F	256	1	S	BTD	40n	25n	575m	0.0	5.0	.85	2.0§	16m	.45		5	C	A243	ML127r
100	S82S117F	256	1	S	BTD	40n	25n	575m	0.0	5.0	.85	2.0△	16m	.45		5	C	A243	ML127r
101	SN74S200AJ	256	1	S	BTD	40n	30n$	500mt	0.0	5.0	.80	2.0§	16m	.45		0	6	PN16ai	ML61a
102	SN74S200AN	256	1	S	BTD	40n	30n$	500mt	0.0	5.0	.80	2.0§	16m	.45		0	6	PN16ai	ML48
103	AM27LS00DC	256	1	S	BTD☑	45n	35n$	350m	0.0	5.0	.80	2.0§	16m	.45		0	7	A130	ML127k
104	AM27LS00PC	256	1	S	BTD☑	45n	35n$	350m	0.0	5.0	.80	2.0§	16m	.45		0	7	A130	ML89a
105	AM27LS01DC	256	1	S	BTD☑	45n	35n$	350m	0.0	5.0	.80	2.0	16m	.45		0	7	A130	ML62c
106	AM27LS01PC	256	1	S	BTD☑	45n	35n$	350m	0.0	5.0	.80	2.0	16m	.45		0	7	A130	ML89a
107	SN74LS200AJ	256	1	S	BTD	45n	35 $	275mt	0.0	5.0	.80	2.0§	16m	.45		0	6	PN16ai	ML61a
108	SN74LS200AN	256	1	S	BTD	45n	35 $	275mt	0.0	5.0	.80	2.0§	16m	.45		0	6	PN16ai	ML48
109	SN74LS300AJ	256	1	S	BTD	45n	35n$	275mt	0.0	5.0	.80	2.0△	16m	.45		0	6	PN16ai	ML61a
110	SN74LS300AN	256	1	S	BTD	45n	35n$	275mt	0.0	5.0	.80	2.0△	16m	.45		0	6	PN16ai	ML48

SYMBOLS AND CODES EXPLAINED IN INTERPRETER

2. READ-WRITE MEMORIES (RAMS)

IN ORDER OF (1)No.WORDS(2)No.BITS/WORD (3)MODE(4)STRUCT.(5)MAX ACC.TIME(6)TYPE No.

LINE No.	6 TYPE No.	ORGANIZATION 1 No. WORDS	2 BITS PER WORD	3 MODE	4 STRUCTURE CODE	5 MAX ACCESS TIME (s)	MAX WRITE CYCLE TIME (s)	MAX OPER. POWER DISS. (W)	RATED POWER SUP. SPAN NEG. (V)	POS. (V)	INPUT LOGIC LEVELS MAX '0' (V)	MIN '1' (V)	MIN OUTPUT SINK CURRENT (A)	@ OUT (V)	MIN CLOCK FREQ. (Hz)	OPER. TEMP. RANGE CODE -	+	DRAWINGS LOGIC/ BLOCK	OUTLINE
1	SN74S300AJ	256	1	S	BTD	45n	40n$	500m†	0.0	5.0	.80	2.0△	16m	.45		0	6	PN16ai	ML61a
2	SN74S300AN	256	1	S	BTD	45n	40n$	500m†	0.0	5.0	.80	2.0△	16m	.45		0	6	PN16ai	ML48
3	N74S200B	256	1	S	BTD	50n	50n	650m	0.0	5.0	.85	2.0§	16m	.45		0	7	A243	ML132
4	N74S200F	256	1	S	BTD	50n	50n	650m	0.0	5.0	.85	2.0§	16m	.45		0	7	A243	ML127r
5	N74S200I	256	1	S	BTD	50n	60n	605m	0.0	5.0	.85	2.0§	16m	.45		0	7	A174a	ML107
6	N74S200N	256	1	S	BTD	50n	40n$	650m	0.0	5.0	.85	2.0§	16m	.45		0	7	A243	ML132
7	N74S201B	256	1	S	BTD	50n	50n	650m	0.0	5.0	.85	2.0§	16m	.45		0	7	A243	ML132
8	N74S301B	256	1	S	BTD	50n	50n	650m	0.0	5.0	.85	2.0△	16m	.45		0	7	A243	ML132
9	N74S301F	256	1	S	BTD	50n	50n	650m	0.0	5.0	.85	2.0△	16m	.45		0	7	A243	ML127r
10	N74S301N	256	1	S	BTD	50n	40n$	650m	0.0	5.0	.85	2.0△	16m	.45		0	7	A243	ML132
11	N82S16B	256	1	S	BTD	50n	55n	1.5m%†	0.0	5.0	.85	2.0§	16m	.45		0	7	A243	ML132
12	N82S17B	256	1	S	BTD	50n	55n	1.5m%†	0.0	5.0	.85	2.0△	16m	.45		0	7	A243	ML132
13	N82S17N	256	1	S	BTD	50n	30n$	575m	0.0	5.0	.85	2.0△	16m	.45		0	7	A243	ML132
14	AM27LS00DM	256	1	S	BTD⍁	55n	50n$	350m	0.0	5.0	.80	2.0§	16m	.45		5	C	A130	ML62c
15	AM27LS00FM	256	1	S	BTD⍁	55n	50n$	350m	0.0	5.0	.80	2.0§	16m	.45		5	C	A130	FL33b
16	AM27LS01DM	256	1	S	BTD⍁	55n	50n$	350m	0.0	5.0	.80	2.0	16m	.45		5	C	A130	ML62c
17	AM27LS01FM	256	1	S	BTD⍁	55n	50n$	350m	0.0	5.0	.80	2.0	16m	.45		5	C	A130	FL33b
18	N74S206B	256	1	S	BTD	55n	60n	605m	0.0	5.0	.85	2.0	16m	.45		0	7	A174	ML132
19	N74S206I	256	1	S	BTD	55n	60n	605m	0.0	5.0	.85	2.0	16m	.45		0	7	A174	ML107
20	SN54LS200AJ	256	1	S	BTD	55n	50n$	275m†	0.0	5.0	.80	2.0§	16m	.50		5	C	PN16ai	ML61a
21	SN54LS200AW	256	1	S	BTD	55n	50n$	275m†	0.0	5.0	.80	2.0§	16m	.50		5	C	PN16ai	MO004AC
22	SN54LS300AJ	256	1	S	BTD	55n	50n$	275m†	0.0	5.0	.80	2.0△	16m	.50		5	C	PN16ai	ML61a
23	SN54LS300AW	256	1	S	BTD	55n	50n$	275m†	0.0	5.0	.80	2.0△	16m	.50		5	C	PN16ai	MO004AC
24	SN54S200AJ	256	1	S	BTD	60n	40n$	500m†	0.0	5.0	.80	2.0§	16m	.50		5	C	PN16ai	ML61a
25	SN54S200AW	256	1	S	BTD	60n	40n$	500m†	0.0	5.0	.80	2.0§	16m	.50		5	C	PN16ai	MO004AC
26	SN54S300AJ	256	1	S	BTD	65n	50n$	500m†	0.0	5.0	.80	2.0△	16m	.50		5	C	PN16ai	ML61a
27	SN54S300AW	256	1	S	BTD	65n	50n$	500m†	0.0	5.0	.80	2.0△	16m	.50		5	C	PN16ai	MO004AC
28#	RC54S200F	256	1	S	BTD	70n	60n	650m	0.0	5.0	.80	2.0§	16m	.50		5	C	A243	ML127r
29#	RC82S16F	256	1	S	BTD	70n	40n$	1.5m%†	0.0	5.0	.80	2.0§	16m	.50		5	C	A243	ML127r
30#	RC82S17F	256	1	S	BTD	70n	40n$	1.5m%†	0.0	5.0	.80	2.0△	16m	.50		5	C	A243	ML127r
31	S54S301F	256	1	S	BTD	70n	60n	650m	0.0	5.0	.80	2.0△	16m	.50		5	C	A243	ML127r
32	S82S16F	256	1	S	BTD	70n	40n$	1.5m%†	0.0	5.0	.80	2.0§	16m	.50		5	C	A243	ML127r
33	S82S16N	256	1	S	BTD	70n	40n$	600m	0.0	5.0	.80	2.0§	16m	.50		5	C	A243	ML132
34	S82S17F	256	1	S	BTD	70n	40n$	1.5m%†	0.0	5.0	.80	2.0△	16m	.50		5	C	A243	ML127r
35	S82S17N	256	1	S	BTD	70n	40n$	600m	0.0	5.0	.80	2.0△	16m	.50		5	C	A243	ML132
36	N82S06I	256	1	S	BTX	30nØ†	30n†	1.5m%†	0.0	5.0	.85	2.0§	16m	.45		0	7	A76	ML107
37	N82S07I	256	1	S	BTX	30nØ†	30n†	1.5m%†	0.0	5.0	.85	2.0	16m	.45		0	7	A76	ML107
38	93421ADC	256	1	S	BTX	40n	35n	675m	0.0	5.0	.85	2.0§	16m	.45		0	7	A153	ML98a
39	93L420DC	256	1	S	BTX	45n	50n	350m	0.0	5.0	.85	2.0§	16m	.45		0	7	A153	ML98a
40	93410ADC	256	1	S	BTX	45n	30n$	700m	0.0	5.0	.85	2.0△	16m	.45		0	7	A150b	ML127s
41	93410AFC	256	1	S	BTX	45n	30n$	700m	0.0	5.0	.85	2.0△	16m	.45		0	7	A150b	FL14
42	93410APC	256	1	S	BTX	45n	30n$	700m	0.0	5.0	.85	2.0△	16m	.45		0	7	A150b	ML170
43	93411ADC	256	1	S	BTX	45n	45n	675m	0.0	5.0	.85	2.0	16m	.45		0	7	A150a	ML98a
44#	HM2504-1	256	1	S	BTX	45n	30n$	1.8mØ	0.0	5.0	.85	2.0	16m	.45		0	7	A150a	ML89g
45	93421DC	256	1	S	BTX	50n	35n	620m	0.0	5.0	.85	2.0§	16m	.45		0	7	A153	ML98a
46	93421PC	256	1	S	BTX	50n	35n	620m	0.0	5.0	.85	2.0§	16m	.45		0	7	A153	ML170
47#	TM106	256	1	S	BTX	50n	35n	620m	0.0	5.0	.80	2.0§	16m	.45		0	7	A153	ML170
48#	uPB2200D	256	1	S	BTX	50n	40n$	575m	0.0	5.0	.80	2.0§	16m	.50		2	7	A440a	ML60d
49#	uPB2206D	256	1	S	BTX	50n	40n$	575m	0.0	5.0	.80	2.0	16m	.50		2	7	A440b	ML60d
50	93L420DM	256	1	S	BTX	55n	55n	350m	0.0	5.0	.85	2.0§	16m	.45		5	C	A153	ML98a
51	93L420FM	256	1	S	BTX	55n	55n	350m	0.0	5.0	.85	2.0§	16m	.45		5	C	A153	FL14
52	93411DC	256	1	S	BTX	55n	45n	620m	0.0	5.0	.85	2.0	16m	.45		0	7	A150a	ML98a
53	93411PC	256	1	S	BTX	55n	45n	620m	0.0	5.0	.85	2.0	16m	.45		0	7	A150a	ML170
54#	HM2504	256	1	S	BTX	55n	30n$	1.8mØ	0.0	5.0	.85	2.0	16m	.45		0	7	A150a	ML89g
55#	TM107	256	1	S	BTX	55n	45n	620m	0.0	5.0	.85	2.0§	16m	.45		0	7	A150a	ML170
56	93410DC	256	1	S	BTX	60n	30n$	676m	0.0	5.0	-1.4	2.0△	16m	.45		0	7	A150	ML127s
57	93410FC	256	1	S	BTX	60n	30n$	700m	0.0	5.0	.85	2.0△	16m	.45		0	7	A150b	FL14
58	93410PC	256	1	S	BTX	60n	30n$	700m	0.0	5.0	.85	2.0△	16m	.45		0	7	A150b	ML170
59	93421DM	256	1	S	BTX	60n	45n	715m	0.0	5.0	.85	2.0§	16m	.45		5	C	A153	ML98a
60	93421FM	256	1	S	BTX	60n	45n	715m	0.0	5.0	.85	2.0§	16m	.45		5	C	A153	FL14
61	93411DM	256	1	S	BTX	65n	55n	715m	0.0	5.0	.85	2.0	16m	.45		5	C	A150a	ML98a
62	93411FM	256	1	S	BTX	65n	55n	715m	0.0	5.0	.85	2.0	16m	.45		5	C	A150a	FL14
63#	uPB2202D	256	1	S	BTX	65n	40n$	375m	0.0	5.0	.80	2.0§	16m	.50		2	7	A440a	ML60d
64	93410DM	256	1	S	BTX	70n	40n$	725m	0.0	5.0	.85	2.0△	16m	.45		5	C	A150b	ML127s
65	93410FM	256	1	S	BTX	70n	40n$	725m	0.0	5.0	.85	2.0△	16m	.45		5	C	A150b	FL14
66	AM270059E	256	1	S	BTX	70n†	60n	675m♦	0.0	5.0	.80	2.0§	16m	.40		0	7	A130	ML62c
67	AM270059F	256	1	S	BTX	70n†	60n	675m♦	0.0	5.0	.80	2.0§	16m	.40		0	7	A130	FL33
68	AM270159E	256	1	S	BTX	70n†	60n	675m♦	0.0	5.0	.80	2.0	16m	.40		0	7	A130	ML62c
69	AM270159F	256	1	S	BTX	70n†	60n	675m♦	0.0	5.0	.80	2.0	16m	.40		0	7	A130	FL33
70	93L421DC	256	1	S	BTX	90n	60n	350m	0.0	5.0	.85	2.0§	16m	.45		0	7	A153	ML98a
71	93L421PC	256	1	S	BTX	90n	60n	350m	0.0	5.0	.85	2.0§	16m	.45		0	7	A153	ML170
72	93L421DM	256	1	S	BTX	100n	70n	350m	0.0	5.5	.85	2.0§	16m	.45		5	C	A153	ML98a
73	93L421FM	256	1	S	BTX	100n	70n	350m	0.0	5.5	.85	2.0§	16m	.45		5	C	A153	FL14
74	N82LS116F	256	1	S	BXD	40n	25n$	384m†	0.0	5.0	.85	2.0§	40u△	5.5		0	7	A243	ML389S
75	N82LS116N	256	1	S	BXD	40n	25n$	384m†	0.0	5.0	.85	2.0§	40u△	5.5		0	7	A243	ML86
76	N82LS117F	256	1	S	BXD	40n	25n$	384m†	0.0	5.0	.85	2.0△	400u△	5.5		0	7	A243	ML389S
77	N82LS117N	256	1	S	BXD	40n	25n$	384m†	0.0	5.0	.85	2.0△	400u△	5.5		0	7	A243	ML86
78	S82LS116F	256	1	S	BXD	70n	40n$	384m†	0.0	5.0	.80	2.0§	400u△	5.5		5	C	A243	ML389S
79	S82LS117F	256	1	S	BXD	70n	40n$	384m†	0.0	5.0	.80	2.0△	400u△	5.5		5	C	A243	ML389S
80	CD4061AD	256	1	S	MCA	380n	450n†	25u	0.0	5.0	.01%Ø	9.99	1.6m	4.99		5	C	A121	ML140
81	MM54C200J	256	1	S	MCA	400nØ	300n$Ø	9.0mⵔ	0.0	15	1.5	3.5§	8.0m†Ø	5.0		5	C	A183	ML1e
82	MM74C200J	256	1	S	MCA	400nØ	300n$Ø	9.0mⵔ	0.0	15	1.5	3.5§	8.0m†Ø	5.0		4	8	A183	ML1e
83	MM74C200N	256	1	S	MCA	400nØ	300n$Ø	9.0mⵔ	0.0	15	1.5	3.5§	8.0m†Ø	5.0		4	8	A183	ML1e
84#	GZF1400D	256	1	S	MCG	200n	200n	100u♦	0.0	10	3.0	7.0	1.6m	.40		3	8	A170	ML176
85	IM6523IDE	256	1	S	MCG	800n	800n	30m♦	0.0	5.0	.80	3.0	2.0m	.45		4	8	PN16g	ML1a
86	IM6523MPE	256	1	S	MCG	800n	800n	30m♦	0.0	5.0	.80	3.0	2.0m	.45		5	C	PN16g	ML2g
87#	HEF4720B	256	1	S	MCX			400mⵔ	0.0	15	4.0	11§	2.4m	1.5		4	8	A288	MLØ
88	34720DC	256	1	S	MCX	100nØ	80n$Ø	600u♦	0.0	10	3.0	7.0§	1.2m	.50		4	8	A170	ML127s
89	34720DM	256	1	S	MCX	100nØ	80n$Ø	600u♦	0.0	10	3.0	7.0§	1.2m	.50		5	C	A170	ML127s
90	34720FC	256	1	S	MCX	100nØ	80n$Ø	600u♦	0.0	10	3.0	7.0§	1.2m	.50		4	8	A170	FL14g
91	34720FM	256	1	S	MCX	100nØ	80n$Ø	600u♦	0.0	10	3.0	7.0§	1.2m	.50		5	C	A170	FL14g
92	34720PC	256	1	S	MCX	100nØ	80n$Ø	600u♦	0.0	10	3.0	7.0§	1.2m	.50		4	8	A170	ML170
93	CD40061AD	256	1	S	MCX	150n	110n	200mⵔ	0.0	10	0.01%	10				5	C	A247	ML140
94	CD40061AE	256	1	S	MCX	150n	110n	200mⵔ	0.0	10	0.01%	10				4	8	A247	MO001AC
95▼	CD40061AH	256	1	S	MCX	150n	110n	200mⵔ	0.0	10	0.01%	10				4	8	A247	
96	CD40061E	256	1	S	MCX	150n	110n	200mⵔ	0.0	10	0.01%	10				4	8	A247	MO001AC
97#	HEF4720BD	256	1	S	MCX	160n	160n*	1.5m♦	0.0	15	4.0	11§	3.0m	1.5		4	8	A354	ML127x
98#	HEF4720BP	256	1	S	MCX	160n	160n*	1.5m♦	0.0	15	4.0	11§	3.0m	1.5		4	8	A354	ML89j
99	4720BDC	256	1	S	MCX	200n$	110n$	3.0m♦	0.0	10	3.0	7.0§	1.2m	.50		4	8	A341	ML157f
100	4720BDM	256	1	S	MCX	200n$	110n$	3.0m♦	0.0	10	3.0	7.0§	1.2m	.50		5	C	A341	ML157f
101	4720BFC	256	1	S	MCX	200n$	110n$	3.0m♦	0.0	10	3.0	7.0§	1.2m	.50		4	8	A341	FL14j
102	4720BFM	256	1	S	MCX	200n$	110n$	3.0m♦	0.0	10	3.0	7.0§	1.2m	.50		5	C	A341	FL14j
103	4720BPC	256	1	S	MCX	200n$	110n$	3.0m♦	0.0	10	3.0	7.0§	1.2m	.50		4	8	A341	ML170
104#	GZF1400P	256	1	S	MCX	200n	200n	100u♦	0.0	10	3.0	7.0	1.6m	4.75		4	8	A170	ML176
105#	HEF4720VD	256	1	S	MCX	220n	220n*	500u♦	0.0	10	3.0	7.0§	1.1m	.50		4	8	A354	ML127x
106#	HEF4720VP	256	1	S	MCX	220n	220n*	500u♦	0.0	10	3.0	7.0§	1.1m	.50		4	8	A354	ML89j
107▼#	HD14537B	256	1	S	MCX	225n	180n		0.0	15	.05%	14.9	3.0m	1.5		4	8	A147a	
108#	HEF4720P	256	1	S	MCX	260n	260n*	400mⵔ	0.0	10	3.0	7.0§	1.2m	.50		4	8	A288	ML48e
109	MCM14537AL	256	1	S	MCX	1.5uØ	1.5uØ	6.0m♦Ø	0.0	15	.05%	14.9§	2.4m	1.5		5	C	A147	ML371
110	MCM14537CL	256	1	S	MCX	1.5uØ	1.5uØ	6.0m♦Ø	0.0	15	.05%	14.9§	2.4m	1.5		4	8	A147	ML371

SYMBOLS AND CODES EXPLAINED IN INTERPRETER

2. READ-WRITE MEMORIES (RAMS)

IN ORDER OF (1)No.WORDS(2)No.BITS/WORD (3)MODE(4)STRUCT.(5)MAX ACC.TIME(6)TYPE No.

LINE No.	6 TYPE No.	ORGANIZATION 1 No. WORDS	2 BITS PER WORD	3 MODE	4 STRUCTURE CODE	5 MAX ACCESS TIME (s)	MAX WRITE CYCLE TIME (s)	MAX OPER. POWER DISS. (W)	RATED POWER SUP. SPAN NEG. (V)	POS. (V)	INPUT LOGIC LEVELS MAX '0' (V)	MIN '1' (V)	MIN OUTPUT SINK CURRENT (A)	@ OUT (V)	MIN CLOCK FREQ. (Hz)	OPER. TEMP. RANGE CODE -	+	DRAWINGS LOGIC/ BLOCK	OUTLINE
1#	HEF4720	256	1	S	MCX	400		5.0m								0	7		
2	25L01I	256	1	S	MNG	1.0u	400n$	435m	12	5.0	.50	3.0	3.0mØ	.45		0	7	A265	ML107a
3	25L01N	256	1	S	MNG	1.0u	400n$	435m	12	5.0	.50	3.0	3.0m	.45		0	7	A265	ML132
4	C1101A1	256	1	S	MPG	1.0u	800n*	1.0 ☑	9.0	5.0	.50	3.0§	2.0m	.45		0	7	A1	ML10c
5	C1101A1DM	256	1	S	MPG	1.0u	800n	700m☑	10	5.0	.50	4.0	1.8m	.45		5	C	A1	ML62c
6	N25L01B	256	1	S	MPG	1.0u	400n$	640m☑	12	5.0	.50	3.0§	3.0m	.45		0	7	A1	ML132
7	N25L01I	256	1	S	MPG	1.0u	400n$	800m☑	12	5.0	.50	3.0§	3.0m	.45		0	7	A1	ML107
8	P1101A1	256	1	S	MPG	1.0u	800n*	700m☑	9.0	5.0	.50	4.0	2.0m	.45		0	7	A1	ML4j
9	1101ADM	256	1	S	MPG	1.5u	800n*	700m☑	9.0	5.0	.50	4.0	1.8m	.45		5	C	A1	ML10c
10	C1101A51	256	1	S	MPG	1.5u	400n	400m	9.0	5.0	.30	4.5	2.0	.45		0	7		MO☑
11	C1101A	256	1	S	MPG	1.5u	800n*	1.0 ☑	9.0	5.0	.50	3.0§	2.0m	.45		0	7	A1	ML10c
12	C1101ADM	256	1	S	MPG	1.5u	800n	700m☑	10	5.0	.50	4.0	1.8m	.45		5	C	A1	ML62c
13	P1101A	256	1	S	MPG	1.5u	800n*	700m☑	9.0	5.0	.50	4.0	2.0m	.45		0	7	A1	ML10c
14	25L01B	256	1	S	MPX	1.0u	300n*	1.7m☑%	12	5.0	.50	3.0	3.0mØ	.45		0	7	A265	ML85
15	MCM93412DC	256	4		BTX	45n	30n$	0.5 %†	0.5	5.5 #	0.8	2.1Δ	100uΔ	4.5		0	7	A478	ML386
16	MCM93412DM	256	4		BTX	45n	40n$	0.5 %†	0.5	5.5 #	0.8	2.1Δ	100uΔ	4.5		5	C	A478	ML386
17	MCM93412FM	256	4		BTX	45n	40n	0.5 %†	0.5	5.5 #	0.8	2.1Δ	100uΔ	4.5		5	C	A478	FL72
18	MCM93412PC	256	4		BTX	45n	30n$	0.5 %†	0.5	5.5 #	0.8	2.1Δ	100uΔ	4.5		0	7	A478	
19	MCM93422DC	256	4		BTX	45n	30n$	0.5 %†	0.5	5.5 #	0.8	2.1§	50u♦ #	2.4		0	7	A478	ML386
20	MCM93422PC	256	4		BTX	45n	30n$	0.5 %†	0.5	5.5 #	0.8	2.1§	50u♦ #	2.4		0	7	A478	ML386
21	MBC5101L4	256	4		MCX	650n	650n	121m	4.5	5.5	0.65	2.2	2.0m	0.4		5	C		
22▼#	GBX10422AD	256	4	S	BEG	15n	8n$	980mΔ	7.0 #	0.5 #	-1.8%	-.81	30m☑			0	7	PN24ig	ML420
23▼#	HM100422F	256	4	S	BEI	10n	6.0n$	800m	4.5	0.0	-1.8	-.88				0	8	A335	FL84
24	F10422DC	256	4	S	BEX	10n	7.0n$	850m†	5.2	0.0	-1.4	-1.1	30m☑			0	7		ML☑
25	F10422FC	256	4	S	BEX	10n	7.0n$	850m†	5.2	0.0	-1.4	-1.1	30m☑			0	7		FL☑
26	F100422DC	256	4	S	BEX	10n	7.0n$	900m	4.5	0.0	-1.4	-1.1	30m☑			0	8		ML☑
27	F100422FC	256	4	S	BEX	10n	7.0n$	900m	4.5	0.0	-1.4	-1.1	30m☑			0	8		FL☑
28#	GXB100422AF	256	4	S	BEX	10n	8.0n$	800m%	4.5	0.0	-.80	-1.8				0	7	A517a	
29#	GXB100422AN	256	4	S	BEX	10n	8.0n$	800m%	4.5	0.0	-.80	-1.8				0	7	A517a	
30#	HM10422	256	4	S	BEX	10n	6.0n$	820m†	5.2	0.0	1.4	1.1				0	7		ML187
31#	HM100422	256	4	S	BEX	10n	6.0n$	820m†	6.5	0.0	1.4	1.1				0	7		ML187
32▼	MBM10422	256	4	S	BEX	10n	7n$	0.7m%	5.2	0.0	-1.8	-.81	-30m☑			6	E	PN24ig	ML448
33#	MB7072E	256	4	S	BEX	12n	8.0n$	600u%	5.2	0.0	-1.4	-1.1	30m☑			0	7	A334	ML346
34♦#	GXB10422AF	256	4	S	BEX	13n	8.0n$	800m%	5.2	0.0	.80	1.8				0	7	A517	
35#	GXB10422AN	256	4	S	BEX	13n	8.0n$	800m%	5.2	0.0	.80	1.8				0	7	A517	
36♦#	GXB100422F	256	4	S	BEX	15n	8.0n$	800m%	4.5	0.0	-.80	-1.8				0	7	A517a	
37#	GXB100422N	256	4	S	BEX	15n	8.0n$	800m%	4.5	0.0	-.80	-1.8				0	7	A517a	
38▼#	HXA100422AD	256	4	S	BEX	15n	8n$	810mΔ	7.0 #	0.5 #	-1.8	-.88	30m☑			0	7	PN24ih	ML420
39#	MB7072N	256	4	S	BEX	15n	8.0n$	600u%	5.2	0.0	-1.4	-1.1	30m☑			0	7	A334	ML346
40#	GXB10422F	256	4	S	BEX	18n	8.0n$	800m%	5.2	0.0	.80	1.8				0	7	A517	
41#	GXB10422N	256	4	S	BEX	18n	8.0n$	800m%	5.2	0.0	.80	1.8				0	7	A517	
42▼#	HXA100422D	256	4	S	BEX	20n	10n$	810mΔ	7.0 #	0.5 #	-1.8	-.88	30m☑			0	7	PN24ih	ML420
43	SN54S207J	256	4	S	BTD	40n†	15n†$	600m†	0.0	5.0	.80	2.0§	16m	.50		5	C	A277	ML61a
44	SN54S208J	256	4	S	BTD	40n†	15n†$	600m†	0.0	5.0	.80	2.0§	16m	.50		5	C	A279	ML213
45	SN74S207J	256	4	S	BTD	40n†	15n†$	600m†	0.0	5.0	.80	2.0§	16m	.50		0	6	A277	ML61a
46	SN74S207N	256	4	S	BTD	40n†	15n†$	600m†	0.0	5.0	.80	2.0§	16m	.50		0	6	A277	ML48
47	SN74S208J	256	4	S	BTD	40n†	15n†$	600m†	0.0	5.0	.80	2.0§	16m	.50		0	6	A279	ML213
48	SN74S208N	256	4	S	BTD	40n†	15n†$	600m†	0.0	5.0	.80	2.0§	16m	.50		0	6	A279	ML161
49	SN54LS207J	256	4	S	BTD	75n†	25n†$	200m†	0.0	5.0	.80	2.0§	16m	.50		5	C	A277	ML61a
50	SN54LS208J	256	4	S	BTD	75n†	25n†$	200m†	0.0	5.0	.80	2.0§	16m	.50		5	C	A279	ML213
51	SN74LS207J	256	4	S	BTD	75n†	25n†$	200m†	0.0	5.0	.80	2.0§	16m	.50		0	6	A277	ML61a
52	SN74LS207N	256	4	S	BTD	75n†	25n†$	200m†	0.0	5.0	.80	2.0§	16m	.50		0	6	A277	ML48
53	SN74LS208J	256	4	S	BTD	75n†	25n†$	200m†	0.0	5.0	.80	2.0§	16m	.50		0	6	A279	ML213
54	SN74LS208N	256	4	S	BTD	75n†	25n†$	200m†	0.0	5.0	.80	2.0§	16m	.50		0	6	A279	ML161
55	93412DC	256	4	S	BTX	45n	30n$	775m	0.0	5.0	.80	2.1	8.0m	.45		0	7	A233	ML8c
56	93412FC	256	4	S	BTX	45n	30n$	775m	0.0	5.0	.80	2.1Δ	8.0m	.45		0	7	A233	FL3c
57	93422DC	256	4	S	BTX	45n	30n$	775m	0.0	5.0	.80	2.1§	8.0m	.45		0	7	A233	ML8c
58	93422FC	256	4	S	BTX	45n	30n$	775m	0.0	5.0	.80	2.1§	8.0m	.45		0	7	A233	FL3c
59	93L412DC	256	4	S	BTX	60n	45n$	325m	0.0	5.0	.80	2.1Δ	8.0m	.45		0	7	A233	ML8c
60	93L412FC	256	4	S	BTX	60n	45n$	400m	0.0	5.0	.80	2.1Δ	8.0m	.45		0	7	A233	FL3c
61	93L422DC	256	4	S	BTX	60n	45n$	325m	0.0	5.0	.80	2.1§	8.0m	.45		0	7	A233	ML8c
62	93L422FC	256	4	S	BTX	60n	45n$	400m	0.0	5.0	.80	2.1§	8.0m	.45		0	7	A233	FL3c
63	93412DM	256	4	S	BTX	60n	40n$	850m	0.0	5.0	.80	2.1	8.0m	.45		5	C	A233	ML8c
64	93412FM	256	4	S	BTX	60n	40n$	850m	0.0	5.0	.80	2.1Δ	8.0m	.45		5	C	A233	FL3c
65	93422DM	256	4	S	BTX	60n	40n$	850m	0.0	5.0	.80	2.1§	8.0m	.45		5	C	A233	ML8c
66	93422FM	256	4	S	BTX	60n	40n$	850m	0.0	5.0	.80	2.1§	8.0m	.45		5	C	A233	FL3c
67	93L412DM	256	4	S	BTX	75n	55n$	375m	0.0	5.0	.80	2.1Δ	8.0m	.45		5	C	A233	ML8c
68	93L412FM	256	4	S	BTX	75n	55n$	375m	0.0	5.0	.80	2.1Δ	8.0m	.45		5	C	A233	FL3c
69	93L422DM	256	4	S	BTX	75n	55n$	375m	0.0	5.0	.80	2.1§	8.0m	.45		5	C	A233	ML8c
70	93L422FM	256	4	S	BTX	75n	55n$	375m	0.0	5.0	.80	2.1§	8.0m	.45		5	C	A233	FL3c
71	HM6501-2	256	4	S	MCG			20m	0.0	5.0	.80	3.0				5	C	A399	
72	HM6501-5	256	4	S	MCG			20m	0.0	5.0	.80	3.0				0	7	A399	
73	HM6501-9	256	4	S	MCG			20m	0.0	5.0	.80	3.0				4	8	A399	
74	HM6501B2	256	4	S	MCG			20m	0.0	5.0	.80	3.0				5	C	A399	
75	HM6501B9	256	4	S	MCG			20m	0.0	5.0	.80	3.0				4	8	A399	
76	HM6551-2	256	4	S	MCG			20m	0.0	5.0	.80	3.0				5	C	A408	
77	HM6551-5	256	4	S	MCG			20m	0.0	5.0	.80	3.0				0	7	A408	
78	HM6551-9	256	4	S	MCG			20m	0.0	5.0	.80	3.0				4	8	A408	
79	HM6551B2	256	4	S	MCG			20m	0.0	5.0	.80	3.0				5	C	A408	
80	HM6551B9	256	4	S	MCG			20m	0.0	5.0	.80	3.0				4	8	A408	
81	HM6561-2	256	4	S	MCG			20m	0.0	5.0	.80	3.0				5	C	A372	
82	HM6561-5	256	4	S	MCG				0.0	5.0	.80	3.0				0	7	A409	
83	HM6561-9	256	4	S	MCG			20m	0.0	5.0	.80	3.0				4	8	A409	
84	HM6561B2	256	4	S	MCG			20m	0.0	5.0	.80	3.0				5	C	A409	
85	HM6561B9	256	4	S	MCG			20m	0.0	5.0	.80	3.0				4	8	A372	
86	HM6562-2	256	4	S	MCG				0.0	5.0	.80	3.0				5	C	A410	
87	HM6562-5	256	4	S	MCG				0.0	5.0	.80	3.0				0	7	A410	
88	HM6562-9	256	4	S	MCG				0.0	5.0	.80	3.0				4	8	A410	
89	HM6562B2	256	4	S	MCG				0.0	5.0	.80	3.0				5	C	A410	
90	HM6562B9	256	4	S	MCG				0.0	5.0	.80	3.0				4	8	A410	
91	IM6551AIDF	256	4	S	MCG	180n		5.0ut♦	0.0	11	.80	9.0§	1.0uΔ			4	8	A297	ML405
92	IM6551AIJF	256	4	S	MCG	180n		5.0ut♦	0.0	11	.80	9.0§	1.0uΔ			4	8	A297	ML406
93	IM6551AMDF	256	4	S	MCG	180n		5.0ut♦	0.0	11	.80	9.0§	1.0uΔ			5	C	A297	ML405
94	IM6551AMJF	256	4	S	MCG	180n		5.0ut♦	0.0	11	.80	9.0§	1.0uΔ			5	C	A297	ML406
95	IM6561AIDN	256	4	S	MCG	180n		5.0ut♦	0.0	11	.80	9.0§	1.0uΔ			4	8	A298	ML397
96	IM6561AIJN	256	4	S	MCG	180n		5.0ut♦	0.0	11	.80	9.0§	1.0uΔ			4	8	A298	ML398
97	IM6561AMDN	256	4	S	MCG	180n		5.0ut♦	0.0	11	.80	9.0§	1.0uΔ			5	C	A298	ML397
98	IM6561AMJN	256	4	S	MCG	180n		5.0ut♦	0.0	11	.80	9.0§	1.0uΔ			5	C	A298	ML398
99	NMC6551BJ-2	256	4	S	MCG	220n	320n	50u♦	0.0	5.0	.80	3.0§	3.2m	.40		5	C	A472	ML77j
100	NMC6551BJ-9	256	4	S	MCG	220n	320n	50u♦	0.0	5.0	.80	3.0§	3.2m	.40		4	8	A472	ML77j
101	NMC6551BN-9	256	4	S	MCG	220n	320n	50u♦	0.0	5.0	.80	3.0§	3.2m	.40		4	8	A472	ML197
102	NMC6552BJ-2	256	4	S	MCG	220n	320n	50u♦	0.0	5.0	.80	3.0§	3.2m	.40		5	C	A473	ML194e
103	NMC6552BJ-9	256	4	S	MCG	220n	320n	50u♦	0.0	5.0	.80	3.0§	3.2m	.40		4	8	A473	ML194e
104	NMC6552BN-9	256	4	S	MCG	220n	320n	50u♦	0.0	5.0	.80	3.0§	3.2m	.40		4	8	A473	ML196
105▼	MM54C920N-3	256	4	S	MCG	250n	290n*	500m☑	0.0	5.0	.80	2.0§	1.0uΔ	5.0		5	C	A291	
106	MM74C920J	256	4	S	MCG	250n	255n*	500m☑	0.0	5.0	.80	3.0§	1.0uΔ	5.0		4	8	A291	ML☑
107	MM74C920N	256	4	S	MCG	250n	120n†	50u♦	0.0	5.0	.80	3.0§	2.0m	.40		4	8	A291	ML204a
108	MM74C921J	256	4	S	MCG	250n	255n*	500m☑	0.0	5.0	.80	3.5§	1.0uΔ	5.0		4	8	A291a	ML☑
109	MM74C921N	256	4	S	MCG	250n	120n†	50u♦	0.0	5.0	.80	3.0§	2.0m	.40		4	8	A291a	ML196
110	MM54C920J	256	4	S	MCG	275n	290n*	500m☑	0.0	5.0	.80	3.0§	1.0uΔ	5.0		5	C	A291	ML☑

SYMBOLS AND CODES EXPLAINED IN INTERPRETER

2. READ-WRITE MEMORIES (RAMS)

IN ORDER OF (1)No.WORDS(2)No.BITS/WORD (3)MODE(4)STRUCT.(5)MAX ACC.TIME(6)TYPE No.

LINE No.	6 TYPE No.	ORGANIZATION 1 No. WORDS	2 BITS PER WORD	3 MODE	4 STRUCTURE CODE	5 MAX ACCESS TIME (s)	MAX WRITE CYCLE TIME (s)	MAX OPER. POWER DISS. (W)	RATED POWER SUP. SPAN NEG. (V)	POS. (V)	INPUT LOGIC LEVELS MAX '0' (V)	MIN '1' (V)	MIN OUTPUT SINK CURRENT (A)	@ OUT (V)	MIN CLOCK FREQ. (Hz)	OPER. TEMP. RANGE CODE -	+	DRAWINGS LOGIC/ BLOCK	OUTLINE
1	MM54C921J	256	4	S	MCG	275n	290n*	500m☑	0.0	5.0	.80	3.0§	1.0u△	5.0		5	C	A291a	ML☑
2	MM74C920J-3	256	4	S	MCG	300n	330n*	500m☑	0.0	5.0	.80	3.5§	1.0u△	5.0		0	7	A291	ML☑
3	MM74C920N-3	256	4	S	MCG	300n	330n*	500m☑	0.0	5.0	.80	3.5§	1.0u△	5.0		0	7	A291	ML☑
4	MM74C921J-3	256	4	S	MCG	300n	330n*	500m☑	0.0	5.0	.80	3.5§	1.0u△	5.0		0	7	A291a	ML☑
5	MM74C921N-3	256	4	S	MCG	300n	330n*	500m☑	0.0	5.0	.80	3.5§	1.0u△	5.0		0	7	A291a	ML☑
6	NMC6551J-2	256	4	S	MCG	300n	400n	50u♦	0.0	5.0	.80	3.0§	3.2m	.40		5	C	A408	ML77j
7	NMC6551J-9	256	4	S	MCG	300n	400n	50u♦	0.0	5.0	.80	3.0§	3.2m	.40		4	8	A408	ML77j
8	NMC6551N-9	256	4	S	MCG	300n	400n	50u♦	0.0	5.0	.80	3.0§	3.2m	.40		4	8	A408	ML204a
9	NMC6552J-2	256	4	S	MCG	300n	400n	50u♦	0.0	5.0	.80	3.0§	3.2m	.40		5	C	A291a	ML194e
10	NMC6552J-9	256	4	S	MCG	300n	400n	50u♦	0.0	5.0	.80	3.0§	3.2m	.40		4	8	A291a	ML194e
11	NMC6552N-9	256	4	S	MCG	300n	400n	50u♦	0.0	5.0	.80	3.0§	3.2m	.40		4	8	A291a	ML196
12▼	HCMP1822CD#	256	4	S	MCG	350n	150n$	8.0m	0.0	7.0	1.5	3.5	3.0m	.40		5	C	A537	
13▼	HCMP1822CP	256	4	S	MCG	350n	150n$	5.0m	0.0	7.0	1.5	3.5	3.0m	.40		4	8	A537	
14	NMC6551J-5	256	4	S	MCG	350n	500n	500u♦	0.0	5.0	.80	3.0§	3.2m	.40		0	7	A408	ML77j
15	NMC6551N-5	256	4	S	MCG	350n	500n	500u♦	0.0	5.0	.80	3.0§	3.2m	.40		0	7	A408	ML204a
16	NMC6552J-5	256	4	S	MCG	350n	500n	500u♦	0.0	5.0	.80	3.0§	3.2m	.40		0	7	A291a	ML194e
17	NMC6552N-5	256	4	S	MCG	350n	500n	500u♦	0.0	5.0	.80	3.0§	3.2m	.40		0	7	A291a	ML196
18	IM6551IDF	256	4	S	MCG	360n		5.0ut♦	0.0	5.0	.80	3.0§	1.0u△			4	8	A297	ML405
19	IM6551IJF	256	4	S	MCG	360n		5.0ut♦	0.0	5.0	.80	3.0§	1.0u△			4	8	A297	ML406
20	IM6551IPF	256	4	S	MCG	360n		5.0ut♦	0.0	5.0	.80	3.0§	1.0u△			4	8	A297	ML407
21	IM6551MJF	256	4	S	MCG	360n		5.0ut♦	0.0	5.0	.80	3.0§	1.0u△			5	C	A297	ML406
22	IM6551MPF	256	4	S	MCG	360n		5.0ut♦	0.0	5.0	.80	3.0§	1.0u△			5	C	A297	ML407
23	IM6561IDN	256	4	S	MCG	360n		5.0ut♦	0.0	5.0	.80	3.0§	1.0u△			4	8	A298	ML397
24	IM6561IJN	256	4	S	MCG	360n		5.0ut♦	0.0	5.0	.80	3.0§	1.0u△			4	8	A298	ML398
25	IM6561IPN	256	4	S	MCG	360n		5.0ut♦	0.0	5.0	.80	3.0§	1.0u△			4	8	A298	ML402
26	IM6561MJF	256	4	S	MCG	360n		5.0ut♦	0.0	5.0	.80	3.0§	1.0u△			5	C	A298	ML398
27	IM6561MPF	256	4	S	MCG	360n		5.0ut♦	0.0	5.0	.80	3.0§	1.0u△			5	C	A298	ML402
28	C5101L-1	256	4	S	MCG	450n	450n*	135m	0.0	5.0	.65	2.2§	2.0m	.40		0	7	A300	ML360b
29	HCMP1822CD	256	4	S	MCG	450n		2.5m†	0.0	5.0	1.5	3.5				5	C		
30	IM6551CJF	256	4	S	MCG	450n		5.0ut♦	0.0	5.0	.80	3.0§	5.0u△			0	7	A297	ML406
31	IM6551CPF	256	4	S	MCG	450n		5.0ut♦	0.0	5.0	.80	3.0§	5.0u△			0	7	A297	ML407
32	IM6561CDN	256	4	S	MCG	450n		5.0ut♦	0.0	5.0	.80	3.0§	5.0u△			0	7	A298	ML397
33	IM6561CJN	256	4	S	MCG	450n		5.0ut♦	0.0	5.0	.80	3.0§	5.0u△			0	7	A298	ML398
34	IM6561CPN	256	4	S	MCG	450n		5.0ut♦	0.0	5.0	.80	3.0§	5.0u△			0	7	A298	ML402
35#	M5L5101LP-1	256	4	S	MCG	450n	450n	135m	0.0	5.0	.65	2.2§	2.0m	.40		0	7	A267	ML212
36	MCM145101-1L	256	4	S	MCG	450n	450n*	135m	0.0	5.0	.65	2.2§	2.0m	.40		0	7	A267	ML373
37	MCM145101-1P	256	4	S	MCG	450n	450n*	135m	0.0	5.0	.65	2.2§	2.0m	.40		0	7	A267	ML212
38	P5101L-1	256	4	S	MCG	450n	450n*	135m	0.0	5.0	.65	2.2§	2.0m	.40		0	7	A300	ML361c
39	P5101L-3	256	4	S	MCG	450n	650n*	135m	0.0	5.0	.65	2.2§	2.0m	.40		0	7	A300	ML361c
40▼	TC5501D	256	4	S	MCG	450n	450n	83m	0.0	5.0	.65	2.2	2.0m	.40		3	8	A539	ML406
41♦	TC5501P	256	4	S	MCG	450n	450n*	83m	0.0	5.0	.65	2.2	2.0m	.40		3	8	A539	ML237
42#	uPD5101C-E	256	4	S	MCG☑	450n	450n	1.0 ☑	0.0	5.0	.65	2.2§	1.0u△	5.0		0	6		
43	C5101L	256	4	S	MCG	650n	650n*	142m	0.0	5.0	.65	2.2§	2.0m	.40		0	7	A196	ML358a
44	C5101L-3	256	4	S	MCG	650n*	650n*	135m	0.0	5.0	.65	2.2§	2.0m	.40		0	7	A300	ML360b
45	MCM145101-3L	256	4	S	MCG	650n	650n*	135m	0.0	5.0	.65	2.2§	2.0m	.40		0	7	A267	ML373
46	MCM145101-3P	256	4	S	MCG	650n	650n*	135m	0.0	5.0	.65	2.2§	2.0m	.40		0	7	A267	ML212
47	MCM145101L	256	4	S	MCG	650n	650n*	135m	0.0	5.0	.65	2.2§	2.0m	.40		0	7	A267	ML373
48	MCM145101P	256	4	S	MCG	650n	650n*	135m	0.0	5.0	.65	2.2§	2.0m	.40		0	7	A267	ML212
49	P5101L	256	4	S	MCG	650n	650n*	142m	0.0	5.0	.65	2.2§	2.0m	.40		0	7	A196	ML361a
50▼	TC5501D-1	256	4	S	MCG	650n	650n	83m	0.0	5.0	.65	2.2	2.0m	.40		3	8	A539	ML406
51♦	TC5501P-1	256	4	S	MCG	650n	650n	83m	0.0	5.0	.65	2.2	2.0m	.40		3	8	A539	ML237
52	MC5101-4	256	4	S	MCG	800n	800n*	1.0 ☑	0.0	5.0	.50	3.0§	2.0m	.40		5	C	PN22f	ML8u
53	MC5101L-4	256	4	S	MCG	800n	800n*	1.0 ☑	0.0	5.0	.50	3.0§	2.0m	.40		5	C	PN22f	ML8u
54	MCM145101-8L	256	4	S	MCG	800n	800n*	150m	0.0	5.0	.65	2.2§	2.0m	.40		0	7	A267	ML373
55	MCM145101-8P	256	4	S	MCG	800n	800n*	150m	0.0	5.0	.65	2.2§	2.0m	.40		0	7	A267	ML212
56#	MN5101	256	4	S	MCG	800n	800n*	75m	0.0	5.0	.65	2.2				1	8	A300	ML77j
57#	HEF4721B	256	4	S	MCX			400m☑	0.0	15	4.0	11§	2.4m	1.5		4	8	A289	ML☑
58#	HEF4721P	256	4	S	MCX	180n†	180n†	400m☑	0.0	10	3.0	7.0§	1.2m	.50		4	8	A289	ML77b
59	CDP1822D	256	4	S	MCX	250n	500n	2.5k♦	0.5	11 #	3.5	1.5	2.0m	.40		4	8	A39A	ML294
60	CDP1822E	256	4	S	MCX	250n	500n	2.5k♦	0.5	11 #	3.5	1.5	2.0m	.40		4	8	A398	ML390
61	MWS5101AEL2	256	4	S	MCX	250n	300n	.25m♦	0.5	7.0 #	.65	2.2	2.0m	.40		0	7	A398	ML390
62	MWS5101EL2	256	4	S	MCX	250n	300n*	250u♦	0.0	5.0	1.5	3.5§	2.0m	.40		0	7	A398	ML295
63	MWS5101ADL3	256	4	S	MCX	350n	400n	1.0m♦	0.5	7.0 #	.65	2.2	2.0m	.40		0	7	A398	ML294
64	MWS5101AEL3	256	4	S	MCX	350n	400n	1.0m♦	0.5	7.0 #	.65	2.2	2.0m	.40		0	7	A398	ML390
65	MWS5101DL3	256	4	S	MCX	350n	400n*	1.0m♦	0.0	5.0	1.5	3.5§	2.0m	.40		0	7	A398	ML294
66	MWS5101EL3	256	4	S	MCX	350n	400n*	1.0m♦	0.0	5.0	1.5	3.5§	2.0m	.40		0	7	A398	ML295
67	SCM5101-1A	256	4	S	MCX	350n	350n*	300m△☑	0.0	5.0	.65	2.2§	1.0u△			0	7		
68	4721BDC	256	4	S	MCX	420n$†	180n$†	1.3m♦	0.0	5.0	1.5	3.5§	400u	.40		4	8	A342	ML77h
69	4721BDM	256	4	S	MCX	420n$†	180n$†	1.3m♦	0.0	5.0	1.5	3.5§	400u	.40		5	C	A342	ML77h
70	4721BFC	256	4	S	MCX	420n$†	180n$†	1.3m♦	0.0	5.0	1.5	3.5§	400u	.40		4	8	A342a	FL47
71	4721BFM	256	4	S	MCX	420n$†	180n$†	1.3m♦	0.0	5.0	1.5	3.5§	400u	.40		5	C	A342a	FL47
72	4721BPC	256	4	S	MCX	420n$†	180n$†	1.3m♦	0.0	5.0	1.5	3.5§	400u	.40		4	8	A342	ML262
73	CDP1822CD	256	4	S	MCX	450n	500n	2.5k♦	0.5	7.0 #	3.5	1.5	2.0m	.40		4	8	A398	ML294
74	CDP1822CE	256	4	S	MCX	450n	500n	2.5k♦	0.5	7.0 #	3.5	1.5	2.0m	.40		4	8	A398	ML390
75	S5101-1	256	4	S	MCX	450n	450n*	50u♦	0.0	5.0	.65	2.2§	2.0m	.40		0	7	A300	ML154
76	S5101L1	256	4	S	MCX	450n	450n	110m	0.0	5.0	.65	2.2§	2.0m	.40		0	7	A300	ML154
77	SCM5101-1	256	4	S	MCX	450n	450n*	135m	0.0	5.0	.80	2.0§	2.0m	.40		0	7	A531	ML☑
78#	uPD5101LC-1	256	4	S	MCX	450n	450n*	135m	0.0	5.0	.65	2.2§	2.0m	.40		0	7	A267	ML363
79	S5101	256	4	S	MCX	650n	650n*	50u♦	0.0	5.0	.65	2.2§	2.0m	.40		0	7	A300	ML154
80	S5101-3	256	4	S	MCX	650n	650n*	7.0m♦	0.0	5.0	.65	2.2§	2.0m	.40		0	7	A300	ML154
81	S5101L3	256	4	S	MCX	650n	650n	110m	0.0	5.0	.65	2.2§	2.0m	.40		0	7	A300	ML154
82	S5101L	256	4	S	MCX	650n	650n	110m	0.0	5.0	.65	2.2	2.0m	.40		0	7	A300	ML154
83♦	SCM5101-3	256	4	S	MCX	650n	650n*	135m	0.0	5.0	.80	2.0§	2.0m	.40		0	7	A531	ML☑
84#	uPD5101LC	256	4	S	MCX	650n	650n*	135m	0.0	5.0	.65	2.2§	2.0m	.40		0	7	A267	ML363
85	S5101-8	256	4	S	MCX	800n	800n*	2.5m♦	0.0	5.0	.65	2.2§	2.0m	.40		0	7	A300	ML154
86	S5101L8	256	4	S	MCX	800n	800n	110m	0.0	5.0	.65	2.2§	2.0m	.40		0	7	A300	ML154
87♦	SCM5101-8	256	4	S	MCX	800n	800n*	150m	0.0	5.0	.80	2.0§	2.0m	.40		0	7	A531	ML☑
88#	uPD5101-E	256	4	S	MCX	800n	800n*	135m	0.0	5.0	.65	2.2§	2.0m	.40		0	7	A267	ML363
89	Am9112APC	256	4	S	MNG		500n△*	290m	0.0	5.0	.80	2.0				0	7		
90	AM9101EDC	256	4	S	MNG		200n△*	275m	0.0	5.0	.80	2.0				0	7		
91	AM9101EPC	256	4	S	MNG		200n△*	275m	0.0	5.0	.80	2.0				0	7		
92	AM9111EDC	256	4	S	MNG		200n△*	275m	0.0	5.0	.80	2.0				0	7		
93	AM9111EPC	256	4	S	MNG		200n△*		0.0	5.0	.80	2.0				0	7		
94	AM9112EDC	256	4	S	MNG		200n△*	290m	0.0	5.0	.80	2.0				0	7		
95	AM9112EPC	256	4	S	MNG		200n△*	290m	0.0	5.0	.80	2.0				0	7		
96	AM9101	256	4	S	MNG	175n†		125m†	0.0	5.0	.80	2.0	3.2m	.40				A196	ML☑
97	AM9111	256	4	S	MNG	175n†		125m†	0.0	5.0	.80	2.0	3.2m	.40				A200	ML☑
98	AM9112	256	4	S	MNG	175n†		125m†	0.0	5.0	.80	2.0	3.2m	.40				A201	ML☑
99#	2101A-2F	256	4	S	MNG	250n	250n*	350m	0.0	5.0	.80	2.0	2.0m	.45		0	7	A196	ML227
100#	2101A-2N	256	4	S	MNG	250n	250n*	350m	0.0	5.0	.80	2.0	2.0m	.45		0	7	A196	ML212e
101#	2111A-2F	256	4	S	MNG	250n	250n*	350m	0.0	5.0	.80	2.0	2.0m	.45		0	7	A200	ML165a
102#	2111A-2N	256	4	S	MNG	250n	250n*	350m	0.0	5.0	.80	2.0	2.0m	.45		0	7	A200	ML291
103#	2112A-2F	256	4	S	MNG	250n	250n*	350m	0.0	5.0	.80	2.0	2.0m	.45		0	7	A240a	ML127r
104#	2112A-2N	256	4	S	MNG	250n	250n*	350m	0.0	5.0	.80	2.0	2.0m	.45		0	7	A240a	ML132
105	C2101A-2	256	4	S	MNG	250n		325m	0.0	5.0	.80	2.0§	2.0m	.45		0	7	A438	ML358a
106	C2111A-2	256	4	S	MNG	250n		325m	0.0	5.0	.80	2.0§	2.0m	.45		0	7	A200	ML360
107	C2112A-2	256	4	S	MNG	250n		325m	0.0	5.0	.80	2.0§	2.0m	.45		0	7	A240	ML358
108	D2101A-2	256	4	S	MNG	250n	170n*	325m	0.0	5.0	.80	2.0§	2.0m	.45		0	7	A438	ML359c
109	D2111A-2	256	4	S	MNG	250n	170n*	325m	0.0	5.0	.80	2.0§	2.0m	.45		0	7	A200	ML359a
110	D2112A-2	256	4	S	MNG	250n	170n*	325m	0.0	5.0	.80	2.0§	2.0m	.45		0	7	A240	ML359

SYMBOLS AND CODES EXPLAINED IN INTERPRETER

2. READ-WRITE MEMORIES (RAMS)

IN ORDER OF (1)No.WORDS(2)No.BITS/WORD (3)MODE(4)STRUCT.(5)MAX ACC.TIME(6)TYPE No.

LINE No.	6 TYPE No.	ORGANIZATION 1 No. WORDS	2 BITS PER WORD	3 MODE	4 STRUCTURE CODE	5 MAX ACCESS TIME (s)	MAX WRITE CYCLE TIME (s)	MAX OPER. POWER DISS. (W)	RATED POWER SUP. SPAN NEG. (V)	POS. (V)	INPUT LOGIC LEVELS MAX '0' (V)	MIN '1' (V)	MIN OUTPUT SINK CURRENT (A)	@ OUT (V)	MIN CLOCK FREQ. (Hz)	OPER. TEMP. RANGE CODE -	+	DRAWINGS LOGIC/ BLOCK	OUTLINE
1#	M5L2101AP2	256	4	S	MNG	250n	250n*	200mt	0.0	5.0						0	7		DL☑
2#	M5L2101AS2	256	4	S	MNG	250n	250n*	200mt	0.0	5.0						0	7		DL☑
3#	M5L2111AP2	256	4	S	MNG	250n	250n*	200mt	0.0	5.0						0	7		DL☑
4#	M5L2111AS2	256	4	S	MNG	250n	250n*	200mt	0.0	5.0						0	7		DL☑
5▼#	M5L2112AP2	256	4	S	MNG	250n	250n*	200mt	0.0	5.0						0	7		DL☑
6▼#	M5L2112AS2	256	4	S	MNG	250n	250n*	200mt	0.0	5.0						0	7		DL☑
7	P2101A-2	256	4	S	MNG	250n	170n*	325m	0.0	5.0	.80	2.0§	2.0m	.45		0	7	A438	ML361b
8	P2111A-2	256	4	S	MNG	250n	170n*	325m	0.0	5.0	.80	2.0§	2.0m	.45		0	7	A200	ML361a
9	P2112A-2	256	4	S	MNG	250n	170n*	325m	0.0	5.0	.80	2.0§	2.0m	.45		0	7	A240	ML361
10#	2101AF	256	4	S	MNG	350n	350n*	350m	0.0	5.0	.80	2.0	2.0m	.45		0	7	A196	ML227
11#	2101AN	256	4	S	MNG	350n	350n*	350m	0.0	5.0	.80	2.0	2.0m	.45		0	7	A196	ML212e
12#	2111AF	256	4	S	MNG	350n	350n*	350m	0.0	5.0	.80	2.0	2.0m	.45		0	7	A200	ML165a
13#	2111AN	256	4	S	MNG	350n	350n*	350m	0.0	5.0	.80	2.0	2.0m	.45		0	7	A200	ML291
14#	2112AF	256	4	S	MNG	350n	350n*	350m	0.0	5.0	.80	2.0	2.0m	.45		0	7	A240a	ML127r
15#	2112AN	256	4	S	MNG	350n	350n*	350m	0.0	5.0	.80	2.0	2.0m	.45		0	7	A240a	ML132
16	C2101A	256	4	S	MNG	350n		275m	0.0	5.0	.80	2.0§	2.0m	.45		0	7	A438	ML358a
17	C2111A	256	4	S	MNG	350n		275m	0.0	5.0	.80	2.0§	2.0m	.45		0	7	A200	ML360
18	C2112A	256	4	S	MNG	350n		275m	0.0	5.0	.80	2.0§	2.0m	.45		0	7	A240	ML358
19	D2101A	256	4	S	MNG	350n	220n*	275m	0.0	5.0	.80	2.0§	2.0m	.45		0	7	A438	ML359c
20	D2111A	256	4	S	MNG	350n	220n*	275m	0.0	5.0	.80	2.0§	2.0m	.45		0	7	A200	ML359a
21	D2112A	256	4	S	MNG	350n	220n*	275m	0.0	5.0	.80	2.0§	2.0m	.45		0	7	A200	ML359a
22▼#	M5L2101AP	256	4	S	MNG	350n	350n*	175mt	0.0	5.0						0	7		DL☑
23▼#	M5L2101AS	256	4	S	MNG	350n	350n*	175mt	0.0	5.0						0	7		DL☑
24#	M5L2111AP	256	4	S	MNG	350n	350n*	175m	0.0	5.0						0	7		DL☑
25#	M5L2111AS	256	4	S	MNG	350n	350n*	175m	0.0	5.0						0	7		DL☑
26▼#	M5L2112AP	256	4	S	MNG	350n	350n*	175mt	0.0	5.0						0	7		DL☑
27▼#	M5L2112AS	256	4	S	MNG	350n	350n*	175mt	0.0	5.0						0	7		DL☑
28	P2101A	256	4	S	MNG	350n	220n*	275m	0.0	5.0	.80	2.0§	2.0m	.45		0	7	A438	ML361b
29	P2111A	256	4	S	MNG	350n	220n*	275m	0.0	5.0	.80	2.0§	2.0m	.45		0	7	A200	ML361a
30	P2112A	256	4	S	MNG	350n	220n*	275m	0.0	5.0	.80	2.0§	2.0m	.45		0	7	A240	ML361
31	uPD412D	256	4	S	MNG	430n		261mt	5.0	12	.65	3.0	1.6m	.60		1	7	A222	ML205
32#	2101A-4F	256	4	S	MNG	450n	450n*	350m	0.0	5.0	.80	2.0	2.0m	.45		0	7	A196	ML227
33#	2101A-4N	256	4	S	MNG	450n	450n*	350m	0.0	5.0	.80	2.0	2.0m	.45		0	7	A196	ML212e
34#	2111A-4F	256	4	S	MNG	450n	450n*	350m	0.0	5.0	.80	2.0	2.0m	.45		0	7	A200	ML165a
35#	2111A-4N	256	4	S	MNG	450n	450n*	350m	0.0	5.0	.80	2.0	2.0m	.45		0	7	A200	ML291
36#	2112A-4F	256	4	S	MNG	450n	450n*	350m	0.0	5.0	.80	2.0	2.0m	.45		0	7	A240a	ML127r
37#	2112A-4N	256	4	S	MNG	450n	450n*	350m	0.0	5.0	.80	2.0	2.0m	.45		0	7	A240a	ML132
38	C2101A-4	256	4	S	MNG	450n		275m	0.0	5.0	.80	2.0§	2.0m	.45		0	7	A438	ML358a
39	C2111A-4	256	4	S	MNG	450n		275m	0.0	5.0	.80	2.0§	2.0m	.45		0	7	A200	ML360
40	C2112A-4	256	4	S	MNG	450n		275m	0.0	5.0	.80	2.0§	2.0m	.45		0	7	A240	ML358
41	D2101A-4	256	4	S	MNG	450n	270n*	275m	0.0	5.0	.80	2.0§	2.0m	.45		0	7	A438	ML359c
42	D2111A-4	256	4	S	MNG	450n	270n*	275m	0.0	5.0	.80	2.0§	2.0m	.45		0	7	A200	ML359a
43	D2112A-4	256	4	S	MNG	450n	270n*	275m	0.0	5.0	.80	2.0§	2.0m	.45		0	7	A240	ML359
44#	M5L2101AP-4	256	4	S	MNG	450n	350n*	315m	5.0	12	.80	2.2§	3.5m	.45		0	7	A196	ML342
45▼#	M5L2101AS4	256	4	S	MNG	450n	450n*	150mt	0.0	5.0						0	7		DL☑
46#	M5L2111AP-4	256	4	S	MNG	450n	350n*	315m	5.0	12	.80	2.2§	3.5m	.45		0	7	A200	ML☑
47#	M5L2111AS4	256	4	S	MNG	450n	450n*	150m	0.0	5.0						0	7		DL☑
48#	M5L2112AP-4	256	4	S	MNG	450n	350n*	315m	5.0	12	.80	2.2§	3.5m	.45		0	7	A240	ML336
49▼#	M5L2112AS4	256	4	S	MNG	450n	450n*	150mt	0.0	5.0						0	7		DL☑
50#	M120-2D1	256	4	S	MNG	450n	100m	500m☑	0.0	12	.60	2.4△	10u△			0	7	PN18bw	ML370
51#	M120-2F1	256	4	S	MNG	450n	100m	500m☑	0.0	12	.60	2.4△	10u△			0	7	PN18bw	DL☑
52	P2101A-4	256	4	S	MNG	450n	270n*	275m	0.0	5.0	.80	2.0§	2.0m	.45		0	7	A438	ML361b
53	P2111A-4	256	4	S	MNG	450n	270n*	275m	0.0	5.0	.80	2.0§	2.0m	.45		0	7	A200	ML361a
54	P2112A-4	256	4	S	MNG	450n	270n*	275m	0.0	5.0	.80	2.0§	2.0m	.45		0	7	A240	ML361
55	2111-1I	256	4	S	MNG	500n	500n*	350m	0.0	5.0	.65	2.2	2.0m	.45		0	7	A200	ML134j
56	2111-1N	256	4	S	MNG	500n	500n*	350m*	0.0	5.0	.65	2.2	2.0m	.45		0	7	A200	ML291
57	C2101-1	256	4	S	MNG	500n	500n*	1.0 ☑	0.0	5.0	.65	2.2§	2.0m	.45		0	7	A196	ML8d
58	C2111-1	256	4	S	MNG	500n	500n*	1.0 ☑	0.0	5.0	.65	2.2§	2.0m	.45		0	7	A200	ML147
59	P2101-1	256	4	S	MNG	500n	500n*	1.0 ☑	0.0	5.0	.65	2.2§	2.0m	.45		0	7	A196	ML8e
60	P2111-1	256	4	S	MNG	500n	500n*	1.0 ☑	0.0	5.0	.65	2.2§	2.0m	.45		0	7	A200	ML3
61	C2101-2	256	4	S	MNG	650n	650n*	1.0 ☑	0.0	5.0	.65	2.2§	2.0m	.45		0	7	A196	ML8d
62	C2111-2	256	4	S	MNG	650n	650n*	1.0 ☑	0.0	5.0	.65	2.2§	2.0m	.45		0	7	A200	ML147
63	C2112-2	256	4	S	MNG	650n	500n*	1.0 ☑	0.0	5.0	.65	2.2§	2.0m	.45		0	7	A201	ML10c
64	P2101-2	256	4	S	MNG	650n	650n*	1.0 ☑	0.0	5.0	.65	2.2§	2.0m	.45		0	7	A196	ML8e
65	P2111-2	256	4	S	MNG	650n	650n*	1.0 ☑	0.0	5.0	.65	2.2§	2.0m	.45		0	7	A200	ML3
66	P2112-2	256	4	S	MNG	650n	500n*	1.0 ☑	0.0	5.0	.65	2.2§	2.0m	.45		0	7	A201	ML4j
67#	M120D1	256	4	S	MNG	700n	100m	500m☑	0.0	12	.60	2.4△	10u△			0	7	PN18bw	ML370
68#	M120F1	256	4	S	MNG	700n	100m	500m☑	0.0	12	.60	2.4△	10u△			0	7	PN18bw	DL☑
69#	2101N	256	4	S	MNG	1.0u	1.0u*	350m	0.0	5.0	.65	2.2	2.0m	.45		0	7	A196	ML212e
70	C2101	256	4	S	MNG	1.0u	1.0u*	1.0 ☑	0.0	5.0	.65	2.2§	2.0m	.45		0	7	A196	ML8d
71	C2111	256	4	S	MNG	1.0u	1.0u*	1.0 ☑	0.0	5.0	.65	2.2§	2.0m	.45		0	7	A200	ML147
72	C2112	256	4	S	MNG	1.0u	850n*	1.0 ☑	0.0	5.0	.65	2.2§	2.0m	.45		0	7	A201	ML10c
73	P2101	256	4	S	MNG	1.0u	1.0u*	1.0 ☑	0.0	5.0	.65	2.2§	2.0m	.45		0	7	A196	ML8e
74	P2111	256	4	S	MNG	1.0u	1.0u*	1.0 ☑	0.0	5.0	.65	2.2§	2.0m	.45		0	7	A200	ML3
75	P2112	256	4	S	MNG	1.0u	850n*	1.0 ☑	0.0	5.0	.65	2.2§	2.0m	.45		0	7	A201	ML4j
76	SYC2101A-2	256	4	S	MNI☑	250n	250n*	1.0 ☑	0.0	5.0	.80	2.0§	3.2m	.40		0	7	A196	ML8u
77	SYC2111A-2	256	4	S	MNI☑	250n	250n*	1.0 ☑	0.0	5.0	.80	2.0§	3.2m	.40		0	7	A200	ML115a
78	SYC2112A-2	256	4	S	MNI☑	250n	250n*	1.0 ☑	0.0	5.0	.80	2.0§	3.2m	.40		0	7	A201	ML107a
79	SYP2101A-2	256	4	S	MNI☑	250n	250n*	1.0 ☑	0.0	5.0	.80	2.0§	3.2m	.40		0	7	A196	ML212a
80	SYP2111A-2	256	4	S	MNI☑	250n	250n*	1.0 ☑	0.0	5.0	.80	2.0§	3.2m	.40		0	7	A200	ML165
81	SYP2112A-2	256	4	S	MNI☑	250n	250n*	1.0 ☑	0.0	5.0	.80	2.0§	3.2m	.40		0	7	A201	ML222
82	SYC2101A	256	4	S	MNI☑	350n	350n*	1.0 ☑	0.0	5.0	.80	2.0§	3.2m	.40		0	7	A196	ML8u
83	SYC2111A	256	4	S	MNI☑	350n	350n*	1.0 ☑	0.0	5.0	.80	2.0§	3.2m	.40		0	7	A200	ML115a
84	SYC2112A	256	4	S	MNI☑	350n	350n*	1.0 ☑	0.0	5.0	.80	2.0§	3.2m	.40		0	7	A201	ML107a
85	SYP2101A	256	4	S	MNI☑	350n	350n*	1.0 ☑	0.0	5.0	.80	2.0§	3.2m	.40		0	7	A196	ML212a
86	SYP2111A	256	4	S	MNI☑	350n	350n*	1.0 ☑	0.0	5.0	.80	2.0§	3.2m	.40		0	7	A200	ML165
87	SYP2112A	256	4	S	MNI☑	350n	350n*	1.0 ☑	0.0	5.0	.80	2.0§	3.2m	.40		0	7	A201	ML222
88	SYC2101A-4	256	4	S	MNI☑	450n	450n*	1.0 ☑	0.0	5.0	.80	2.0§	3.2m	.40		0	7	A196	ML8u
89	SYC2111A-4	256	4	S	MNI☑	450n	450n*	1.0 ☑	0.0	5.0	.80	2.0§	3.2m	.40		0	7	A200	ML115a
90	SYC2112A-4	256	4	S	MNI☑	450n	450n*	1.0 ☑	0.0	5.0	.80	2.0§	3.2m	.40		0	7	A201	ML107a
91	SYP2101A-4	256	4	S	MNI☑	450n	450n*	1.0 ☑	0.0	5.0	.80	2.0§	3.2m	.40		0	7	A196	ML212a
92	SYP2111A-4	256	4	S	MNI☑	450n	450n*	1.0 ☑	0.0	5.0	.80	2.0§	3.2m	.40		0	7	A200	ML165
93	SYP2112A-4	256	4	S	MNI☑	450n	450n*	1.0 ☑	0.0	5.0	.80	2.0§	3.2m	.40		0	7	A201	ML222
94	SYC2101-1	256	4	S	MNI☑	500n	500n*	1.0 ☑	0.0	5.0	.65	2.2§	2.0m	.45		0	7	A196	ML8u
95	SYC2111-1	256	4	S	MNI☑	500n	500n*	1.0 ☑	0.0	5.0	.65	2.2§	2.0m	.45		0	7	A200	ML115a
96	SYC2112-1	256	4	S	MNI☑	500n	500n*	1.0 ☑	0.0	5.0	.65	2.2§	2.0m	.45		0	7	A201	ML107a
97	SYP2101-1	256	4	S	MNI☑	500n	500n*	1.0 ☑	0.0	5.0	.65	2.2§	2.0m	.45		0	7	A196	ML212a
98	SYP2111-1	256	4	S	MNI☑	500n	500n*	1.0 ☑	0.0	5.0	.65	2.2§	2.0m	.45		0	7	A200	ML165
99	SYP2112-1	256	4	S	MNI☑	500n	500n*	1.0 ☑	0.0	5.0	.65	2.2§	2.0m	.45		0	7	A201	ML222
100	AM9101DDC	256	4	S	MNX	250nØ	250n*	290m	0.0	5.0	.80	2.0	3.2m	.40		0	7	A480	ML197c
101	AM9101DPC	256	4	S	MNX	250nØ	250n*	290m	0.0	5.0	.80	2.0	3.2m	.40		0	7	A480	ML197c
102	AM9111DDC	256	4	S	MNX	250nØ	250n*	290m	0.0	5.0	.80	2.0	3.2m	.40		0	7	A481	ML154
103	AM9111DPC	256	4	S	MNX	250nØ	250n*	290m	0.0	5.0	.80	2.0	3.2m	.40		0	7	A481	ML197c
104	AM9112DDC	256	4	S	MNX	250nØ	250n*	290m	0.0	5.0	.80	2.0	3.2m	.40		0	7	A482	ML89d
105	AM9112DPC	256	4	S	MNX	250nØ	250n*	290m	0.0	5.0	.80	2.0	3.2m	.40		0	7	A482	ML89d
106	AM91L01CDC	256	4	S	MNX	300nØ	300n*	175m	0.0	5.0	.80	2.0	3.2m	.40		0	7	A480	ML194
107	AM91L01CDM	256	4	S	MNX	300nØ	300n*	175m	0.0	5.0	.80	2.0	3.2m	.40		5	C	A480	ML194
108	AM91L01CPC	256	4	S	MNX	300nØ	300n*	175m	0.0	5.0	.80	2.0	3.2m	.40		0	7	A480	ML197c
109	AM91L11CDC	256	4	S	MNX	300nØ	300n*	175m	0.0	5.0	.80	2.0	3.2m	.40		0	7	A481	ML154
110	AM91L11CDM	256	4	S	MNX	300nØ	300n*	175m	0.0	5.0	.80	2.0	3.2m	.40		5	C	A481	ML154

SYMBOLS AND CODES EXPLAINED IN INTERPRETER

2. READ-WRITE MEMORIES (RAMS)

IN ORDER OF (1)No.WORDS(2)No.BITS/WORD (3)MODE(4)STRUCT.(5)MAX ACC.TIME(6)TYPE No.

LINE No.	6 TYPE No.	ORGANIZATION 1 No. WORDS	2 BITS PER WORD	3 MODE	4 STRUCTURE CODE	5 MAX ACCESS TIME (s)	MAX WRITE CYCLE TIME (s)	MAX OPER. POWER DISS. (W)	RATED POWER SUP. SPAN NEG. (V)	RATED POWER SUP. SPAN POS. (V)	INPUT LOGIC LEVELS MAX '0' (V)	INPUT LOGIC LEVELS MIN '1' (V)	MIN OUTPUT SINK CURRENT (A)	MIN OUTPUT SINK CURRENT @ OUT (V)	MIN CLOCK FREQ. (Hz)	OPER. TEMP. RANGE CODE -	OPER. TEMP. RANGE CODE +	DRAWINGS LOGIC/ BLOCK	DRAWINGS OUTLINE
1	AM91L11CPC	256	4	S	MNX	300nØ	300n*	175m	0.0	5.0	.80	2.0	3.2m	.40		0	7	A481	ML197c
2	AM91L12CDC	256	4	S	MNX	300nØ	300n*	175m	0.0	5.0	.80	2.0	3.2m	.40		0	7	A482	ML312a
3	AM91L12CDM	256	4	S	MNX	300nØ	300n*	175m	0.0	5.0	.80	2.0	3.2m	.40		5	C	A482	ML312a
4	AM91L12CPC	256	4	S	MNX	300nØ	300n*	175m	0.0	5.0	.80	2.0	3.2m	.40		0	7	A482	ML89d
5	AM9101CDC	256	4	S	MNX	300nØ	300n*	290m	0.0	5.0	.80	2.0	3.2m	.40		0	7	A480	ML194
6	AM9101CDM	256	4	S	MNX	300nØ	300n*	290m	0.0	5.0	.80	2.0	3.2m	.40		5	C	A480	ML194
7	AM9101CPC	256	4	S	MNX	300nØ	300n*	290m	0.0	5.0	.80	2.0	3.2m	.40		0	7	A480	ML197c
8	AM9111CDC	256	4	S	MNX	300nØ	300n*	290m	0.0	5.0	.80	2.0	3.2m	.40		0	7	A481	ML154
9	AM9111CDM	256	4	S	MNX	300nØ	300n*	290m	0.0	5.0	.80	2.0	3.2m	.40		5	C	A481	ML154
10	AM9111CPC	256	4	S	MNX	300nØ	300n*	290m	0.0	5.0	.80	2.0	3.2m	.40		0	7	A481	ML197c
11	AM9112CDC	256	4	S	MNX	300nØ	300n*	290m	0.0	5.0	.80	2.0	3.2m	.40		0	7	A482	ML312a
12	AM9112CDM	256	4	S	MNX	300nØ	300n*	290m	0.0	5.0	.80	2.0	3.2m	.40		5	C	A482	ML312a
13	AM9112CPC	256	4	S	MNX	300nØ	300n*	290m	0.0	5.0	.80	2.0	3.2m	.40		0	7	A482	ML89d
14	AM91L01BDC	256	4	S	MNX	400nØ	400n*	175m	0.0	5.0	.80	2.0	3.2m	.40		0	7	A480	ML154
15	AM91L01BDM	256	4	S	MNX	400nØ	400n*	175m	0.0	5.0	.80	2.0	3.2m	.40		5	C	A480	ML154
16	AM91L01BFM	256	4	S	MNX	400nØ	400n*	175m	0.0	5.0	.80	2.0	3.2m	.40		5	C	A480a	FL40
17	AM91L01BPC	256	4	S	MNX	400nØ	400n*	175m	0.0	5.0	.80	2.0	3.2m	.40		0	7	A480	ML197c
18	AM91L11BDC	256	4	S	MNX	400nØ	400n*	175m	0.0	5.0	.80	2.0	3.2m	.40		0	7	A481	ML194
19	AM91L11BDM	256	4	S	MNX	400nØ	400n*	175m	0.0	5.0	.80	2.0	3.2m	.40		5	C	A481	ML154
20	AM91L11BFM	256	4	S	MNX	400nØ	400n*	175m	0.0	5.0	.80	2.0	3.2m	.40		5	C	A481a	FL40
21	AM91L11BPC	256	4	S	MNX	400nØ	400n*	175m	0.0	5.0	.80	2.0	3.2m	.40		0	7	A481	ML197c
22	AM91L12BDC	256	4	S	MNX	400nØ	400n*	175m	0.0	5.0	.80	2.0	3.2m	.40		0	7	A482	ML312a
23	AM91L12BDM	256	4	S	MNX	400nØ	400n*	175m	0.0	5.0	.80	2.0	3.2m	.40		5	C	A482	ML312a
24	AM91L12BFM	256	4	S	MNX	400nØ	400n*	175m	0.0	5.0	.80	2.0	3.2m	.40		5	C	A482	FL33b
25	AM91L12BPC	256	4	S	MNX	400nØ	400n*	175m	0.0	5.0	.80	2.0	3.2m	.40		0	7	A482	ML89d
26	AM9101BDC	256	4	S	MNX	400nØ	400n*	290m	0.0	5.0	.80	2.0	3.2m	.40		0	7	A480	ML154
27	AM9101BDM	256	4	S	MNX	400nØ	400n*	290m	0.0	5.0	.80	2.0	3.2m	.40		5	C	A480	ML154
28	AM9101BFM	256	4	S	MNX	400nØ	400n*	290m	0.0	5.0	.80	2.0	3.2m	.40		5	C	A480a	FL40
29	AM9101BPC	256	4	S	MNX	400nØ	400n*	290m	0.0	5.0	.80	2.0	3.2m	.40		0	7	A480	ML197c
30	AM9111BDC	256	4	S	MNX	400nØ	400n*	290m	0.0	5.0	.80	2.0	3.2m	.40		0	7	A481	ML194
31	AM9111BDM	256	4	S	MNX	400nØ	400n*	290m	0.0	5.0	.80	2.0	3.2m	.40		5	C	A481	ML154
32	AM9111BFM	256	4	S	MNX	400nØ	400n*	290m	0.0	5.0	.80	2.0	3.2m	.40		5	C	A481a	FL40
33	AM9111BPC	256	4	S	MNX	400nØ	400n*	290m	0.0	5.0	.80	2.0	3.2m	.40		0	7	A481	ML197c
34	AM9112BDC	256	4	S	MNX	400nØ	400n*	290m	0.0	5.0	.80	2.0	3.2m	.40		0	7	A482	ML312a
35	AM9112BDM	256	4	S	MNX	400nØ	400n*.	290m	0.0	5.0	.80	2.0	3.2m	.40		5	C	A482	ML312a
36	AM9112BFM	256	4	S	MNX	400nØ	400n*	290m	0.0	5.0	.80	2.0	3.2m	.40		5	C	A482	FL33b
37	AM9112BPC	256	4	S	MNX	400nØ	400n*	290m	0.0	5.0	.80	2.0	3.2m	.40		0	7	A482	ML89d
38#	uPD412C	256	4	S	MNX	430n		262m♦	5.0	12	.65	3.0	1.7m	.60		1	7	A222	ML205
39#	uPD2101ALC	256	4	S	MNX	450n	350n	367m	0.0	5.0	.80	2.0§	2.1m	.40		1	7	A196	ML363
40#	uPD2101ALC-2	256	4	S	MNX	450n	250n	367m	0.0	5.0	.80	2.0§	2.1m	.40		1	7	A196	ML363
41#	uPD2101ALC-4	256	4	S	MNX	450n	450n	367m	0.0	5.0	.80	2.0§	2.1m	.40		1	7	A196	ML363
42#	uPD2111ALC	256	4	S	MNX	450n	220n*	341m	0.0	5.0	.80	2.0§	2.1m	.40		1	7	A200	ML368
43#	uPD2111ALC-2	256	4	S	MNX	450n	170n*	341m	0.0	5.0	.80	2.0§	2.1m	.40		1	7	A200	ML368
44#	uPD2111ALC-4	256	4	S	MNX	450n	270n*	341m	0.0	5.0	.80	2.0§	2.1m	.40		1	7	A200	ML368
45	AM91L01ADC	256	4	S	MNX	500nØ	500n*	175m	0.0	5.0	.80	2.0	3.2m	.40		0	7	A480	ML154
46	AM91L01ADM	256	4	S	MNX	500nØ	500n*	175m	0.0	5.0	.80	2.0	3.2m	.40		5	C	A480	ML154
47	AM91L01AFM	256	4	S	MNX	500nØ	500n*	175m	0.0	5.0	.80	2.0	3.2m	.40		5	C	A480a	FL40
48	AM91L01APC	256	4	S	MNX	500nØ	500n*	175m	0.0	5.0	.80	2.0	3.2m	.40		0	7	A480	ML197c
49	AM91L11ADC	256	4	S	MNX	500nØ	500n*	175m	0.0	5.0	.80	2.0	3.2m	.40		0	7	A481	ML194
50	AM91L11ADM	256	4	S	MNX	500nØ	500n*	175m	0.0	5.0	.80	2.0	3.2m	.40		5	C	A481	ML194
51	AM91L11AFM	256	4	S	MNX	500nØ	500n*	175m	0.0	5.0	.80	2.0	3.2m	.40		5	C	A481a	FL40
52	AM91L11APC	256	4	S	MNX	500nØ	500n*	175m	0.0	5.0	.80	2.0	3.2m	.40		0	7	A481	ML197c
53	AM91L12ADC	256	4	S	MNX	500nØ	500n*	175m	0.0	5.0	.80	2.0	3.2m	.40		0	7	A482	ML312a
54	AM91L12ADM	256	4	S	MNX	500nØ	500n*	175m	0.0	5.0	.80	2.0	3.2m	.40		5	C	A482	ML312a
55	AM91L12AFM	256	4	S	MNX	500nØ	500n*	175m	0.0	5.0	.80	2.0	3.2m	.40		5	C	A482	F33b
56	AM91L12APC	256	4	S	MNX	500nØ	500n*	175m	0.0	5.0	.80	2.0	3.2m	.40		0	7	A482	ML89d
57	AM9101ADC	256	4	S	MNX	500nØ	500n*	290m	0.0	5.0	.80	2.0	3.2m	.40		0	7	A480	ML154
58	AM9101ADM	256	4	S	MNX	500nØ	500n*	290m	0.0	5.0	.80	2.0	3.2m	.40		5	C	A480	ML154
59	AM9101AFM	256	4	S	MNX	500nØ	500n*	290m	0.0	5.0	.80	2.0	3.2m	.40		5	C	A480a	FL40
60	AM9101APC	256	4	S	MNX	500nØ	500n*	290m	0.0	5.0	.80	2.0	3.2m	.40		0	7	A480	ML197c
61	AM9111ADC	256	4	S	MNX	500nØ	500n*	290m	0.0	5.0	.80	2.0	3.2m	.40		0	7	A481	ML194
62	AM9111ADM	256	4	S	MNX	500nØ	500n*	290m	0.0	5.0	.80	2.0	3.2m	.40		5	C	A481	ML194
63	AM9111AFM	256	4	S	MNX	500nØ	500n*	290m	0.0	5.0	.80	2.0	3.2m	.40		5	C	A481a	FL40
64	AM9111APC	256	4	S	MNX	500nØ	500n*	290m	0.0	5.0	.80	2.0	3.2m	.40		0	7	A481	ML197c
65	AM9112ADC	256	4	S	MNX	500nØ	500n*	290m	0.0	5.0	.80	2.0	3.2m	.40		0	7	A482	ML312a
66	AM9112ADM	256	4	S	MNX	500nØ	500n*	290m	0.0	5.0	.80	2.0	3.2m	.40		5	C	A482	ML312a
67	AM9112AFM	256	4	S	MNX	500nØ	500n*	290m	0.0	5.0	.80	2.0	3.2m	.40		5	C	A482	F33b
68	AM9112APC	256	4	S	MNX	500nØ	500n*	290m	0.0	5.0	.80	2.0	3.2m	.40		0	7	A482	ML89d
69#	N8X350F	256	8	D	BXX			925m	0.0	5.0	.85	2.0§	9.6m	.50		0	7	A453	ML227
70#	S8X350F	256	8	D	BXX			925m	0.0	5.0	.85	2.0§	9.6m	.50		5	C	A453	ML227
71	35391DC	256	8	S	MNG	400n	400n*	500m	0.0	5.0	.65	2.2	1.6m	.40		0	7	A315	ML77h
72	35392DC	256	8	S	MNG	500n	500n*	500m	0.0	5.0	.65	2.2	1.6m	.40		0	7	A315	ML77h
73	3539DC	256	8	S	MNG	650n	650n*	500m	0.0	5.0	.65	2.2	1.6m	.40		0	7	A315	ML77h
74	35391CD	256	8	S	MNX	400n	150n*$	394m	0.0	5.0	.80	2.4	1.6m	.40		0	7	A315a	ML229
75	35391CP	256	8	S	MNX	400n	150n*$	394m	0.0	5.0	.80	2.4	1.6m	.40		0	7	A315a	ML212f
76	35392CD	256	8	S	MNX	500n	175n*$	394m	0.0	5.0	.80	2.4	1.6m	.40		0	7	A315a	ML229
77	35392CP	256	8	S	MNX	500n	175n*$	394m	0.0	5.0	.80	2.4	1.6m	.40		0	7	A315a	ML212f
78	3539UCD	256	8	S	MNX	650n	225n$	1.6 ☑	0.0	5.0	.80	2.4§	1.6m	.40		0	7	A513	ML229
79	3539UCP	256	8	S	MNX	650n	225n$	1.6 ☑	0.0	5.0	.80	2.4§	1.6m	.40		0	7	A513	ML230
80	ID8155	256	8	S	MXX	400n		1.5 ☑	0.0	5.0	0.8	2.0	10uΔ	4.5		4	8	A510	
81	ID8156	256	8	S	MXX	400n		1.5 ☑	0.0	5.0	0.8	2.0	10uΔ	4.5		4	8	A510	
82#	N82S212F	256	9	S	BTD	45n	25n$	925m	0.0	5.0	.85	2.0§	9.6m	.50		0	7	A456	ML227
83	N82S210F	256	9	S	BTD	60n	40n$	925m	0.0	5.0	.85	2.0§	9.6m	.50		0	7	A367b	ML133
84	N82S210N	256	9	S	BTD	60n	40n$	925m	0.0	5.0	.85	2.0§	9.6m	.50		0	7	A367b	ML133
85	3532-9A-7K	512	1	S	MPG	550n	600n	230m†	3.0	5.0	.80	4.0	9.0m	.40		0	7	PN16b	ML102
86	3532-9B-7K	512	1	S	MPG	550n	1.0u	230m†	3.0	5.0	.80	4.0	9.0m	.40		0	7	PN16b	ML102
87	HM6513-5	512	4	S	MCG			35m	0.0	5.0	.80	3.0				0	7	A404	
88	HM6513-9	512	4	S	MCG			35m	0.0	5.0	.80	3.0				4	8	A404	
89	MC2102A4	1000	1	S	MNG	450n	450n*	1.0 ☑	0.0	5.0	.80	2.0§	2.1m	.45		5	C	PN16m	ML10c
90	MEM-1B	1000	8	S			500n	425m	0.0	5.0						0	7		
91	MEM-2	1000	8	S			550n		-12	12						0	7		
92	MEM-6	1000	8	S			500n	200m	0.0	5.0						0	7		
93▼	MK4118AJ-1	1000	8	S	MNG	120n	120n*	1.0 ☑	0.0	5.0	.80	2.2	10uΔ	.40		0	7	A532	ML390
94▼	MK4118AN-1	1000	8	S	MNG	120n	120n*	1.0 ☑	0.0	5.0	.80	2.2	10uΔ	.40		0	7	A532	ML419
95▼	MK4118AP-1	1000	8	S	MNG	120n	120n*	1.0 ☑	0.0	5.0	.80	2.2	10uΔ	.40		0	7	A532	ML224
96▼	MK4118AJ-2	1000	8	S	MNG	150n	150n*	1.0 ☑	0.0	5.0	.80	2.2	10uΔ	.40		0	7	A532	ML390
97▼	MK4118AN-2	1000	8	S	MNG	150n	150n*	1.0 ☑	0.0	5.0	.80	2.2	10uΔ	.40		0	7	A532	ML419
98▼	MK4118AP-2	1000	8	S	MNG	150n	150n*	1.0 ☑	0.0	5.0	.80	2.2	10uΔ	.40		0	7	A532	ML224
99▼	MK4118AJ-3	1000	8	S	MNG	200n	200n*	1.0 ☑	0.0	5.0	.80	2.2	10uΔ	.40		0	7	A532	ML390
100▼	MK4118AN-3	1000	8	S	MNG	200n	200n*	1.0 ☑	0.0	5.0	.80	2.2	10uΔ	.40		0	7	A532	ML419
101▼	MK4118AP-3	1000	8	S	MNG	200n	200n*	1.0 ☑	0.0	5.0	.80	2.2	10uΔ	.40		0	7	A532	ML224
102▼	MK4118AJ-4	1000	8	S	MNG	250n	250n*	1.0 ☑	0.0	5.0	.80	2.2	10uΔ	.40		0	7	A532	ML390
103▼	MK4118AN-4	1000	8	S	MNG	250n	250n*	1.0 ☑	0.0	5.0	.80	2.2	10uΔ	.40		0	7	A532	ML419
104▼	MK4118AP-4	1000	8	S	MNG	250n	250n*	1.0 ☑	0.0	5.0	.80	2.2	10uΔ	.40		0	7	A532	ML224
105#	RC82S10F	1024	1		BTD	60n	60n	775m	0.0	5.0	.80	2.1Δ	16m	.50		5	C	A242	ML127r
106#	RC82S10I	1024	1		BTX	70n	75n	850m	0.0	5.0	.80	2.1Δ	16m	.50		5	C	A242	ML107
107#	HAB1500	1024	1	D	MNG	85n	270n	220m	15	15	.80	14.2	900u		500 Δ	0	7	A101	ML115
108#	HAB1501	1024	1	D	MNG	150n	450n	120m	12	12	.80	11.4	900u		500 Δ	0	7	A101	ML115
109#	HAB1502	1024	1	D	MNG	200n	450n*	165m	12	-12	.80	3.0	1.6m	.40	500 Δ	0	7		
110	1103-1IK	1024	1	D	MPG	150n*	340n*	1.0 ☑	0.0	19	2.0	18	10uΔ	0.0	1.0kΔ	0	5	A2	ML134

SYMBOLS AND CODES EXPLAINED IN INTERPRETER

2. READ-WRITE MEMORIES (RAMS)

IN ORDER OF (1)No.WORDS(2)No.BITS/WORD (3)MODE(4)STRUCT.(5)MAX ACC.TIME(6)TYPE No.

LINE No.	6 TYPE No.	ORGANIZATION 1 No. WORDS	2 BITS PER WORD	3 MODE	4 STRUCTURE CODE	5 MAX ACCESS TIME (s)	MAX WRITE CYCLE TIME (s)	MAX OPER. POWER DISS. (W)	RATED POWER SUP. SPAN NEG. (V)	POS. (V)	INPUT LOGIC LEVELS MAX '0' (V)	MIN '1' (V)	MIN OUTPUT SINK CURRENT (A)	@ OUT (V)	MIN CLOCK FREQ. (Hz)	OPER. TEMP. RANGE CODE -	+	DRAWINGS LOGIC/ BLOCK	OUTLINE
1	1103-1XA	1024	1	D	MPG	150n*	340n*	1.0 ☑	0.0	19	2.0	18	10u△	0.0	1.0k△	0	5	A2	ML131
2	1103IK	1024	1	D	MPG	300n	580n	1.0	0.0	16	1.0	15				0	7	A2	ML134
3	1103XA	1024	1	D	MPG	300n	580n	1.0	0.0	16	1.0	15				0	7	A2	ML172
4	3534-9-7T	1024	1	D	MPG	300n*	480n*		0.0	16	1.8	15			500	0	7	PN18k	ML25a
5#	GYQ101	1024	1	D	MPG	300n*	565n*	337m	0.0	16	1.8	15	1.0u	0.0	500 △	0	7	A2	ML☑
6	1103I	1024	1	D	MPX	300n*	580n*	1.0 ☑	0.0	16	1.5	15.3			500 △	0	7	A2	ML134j
7	1103N	1024	1	D	MPX	300n*	580n*	1.0 ☑	0.0	16	1.5	15.3			500 △	0	7	A2	ML291
8▼#	HM2112	1024	1	S	BEX	7.0n	5.0n		5.2	0.0	1.85*%	.81#				0	7	A97b	
9#	HM2112-1	1024	1	S	BEX	8.0n	6.0n$	820mt	5.2	0.0	1.4	1.1				0	7	A97b	ML89h
10#	GXB100415	1024	1	S	BEX	13n	10n$	700m%	4.5	0.0	-.80	-1.8				0	7	B519	
11▼#	HXA100415AD	1024	1	S	BEX	15n	10n$	700m△	7.0 #	0.5 #	-1.8	-.88	30m☑			0	7	PN16at	ML421
12	DM10415AJ	1024	1	S	BEX	20n	25n$	780m	5.2	0.0	-1.8*	-1.1#	30m☑			0	7	A474	ML127k
13	DM10415AN	1024	1	S	BEX	20n	25n$	780m	5.2	0.0	-1.8*	-1.1#	30m☑			0	7	A474	ML178
14	F10415ADC	1024	1	S	BEX	20n	12n$	780m	5.2	0.0	-1.4	-1.1	30m☑			0	7	A97b	ML1k
15	F10415AFC	1024	1	S	BEX	20n	12n$	780m	5.2	0.0	-1.4	-1.1	30m☑			0	7	A97b	FL14
16	F100415DC	1024	1	S	BEX	20n	12n$	780m	5.2	0.0	-1.4	-1.1	30m☑			0	8	A97b	ML1k
17	F100415FC	1024	1	S	BEX	20n	12n$	780m	5.2	0.0	-1.4	-1.1	30m☑			0	8	A97b	FL14
18#	HM2110-2	1024	1	S	BEX	20n	25n$	500u%	5.2	0.0	-1.4	-1.1	30m☑			0	7	A97b	ML217
19▼#	HXA100415D	1024	1	S	BEX	20n	12n$	700m△	7.0 #	0.5 #	-1.8	-.88	30m☑			0	7	PN16at	ML421
20♦#	MBM10415AH	1024	1	S	BEX	20n	9nt$	500u%	5.4	0.0	-1.8*	-.81#	30m☑			0	7	A331	ML1m
21#	HM2110-1	1024	1	S	BEX	25n	25n$	500u%	5.2	0.0	-1.4	-1.1	30m☑			0	7	A97b	ML217
22	MCM10146F	1024	1	S	BEX	29n	25n$	754m	5.2	0.0	-1.4	-1.1	50m☑			0	7	A420	FL34
23	MCM10146L	1024	1	S	BEX	29n	25n$	754m	5.2	0.0	-1.4	-1.1	50m☑			0	7	A420	ML372
24#	GXB10415A	1024	1	S	BEX	32nØ	27n$Ø	780mØ	5.2	0.0	-1.4	-1.1	50m☑			0	7	A331	ML176
25	DM10415J	1024	1	S	BEX	35n	25n$	780m	5.2	0.0	-1.8*	-1.1#	30m☑			0	7	A474	ML127k
26	DM10415N	1024	1	S	BEX	35n	25n$	780m	5.2	0.0	-1.8*	-1.1#	30m☑			0	7	A474	ML178
27	F10415DC	1024	1	S	BEX	35n	25n$	780m	5.2	0.0	-1.4	-1.1	30m☑			0	7	A97b	ML1k
28	F10415FC	1024	1	S	BEX	35n	25n$	780m	5.2	0.0	-1.4	-1.1	30m☑			0	7	A97b	FL14
29#	HM2110	1024	1	S	BEX	35n	25n$	500u%	5.2	0.0	-1.4	-1.1	30m☑			0	7	A97b	ML217
30♦#	MBM10415A	1024	1	S	BEX	35n	20nt$	500u%	5.4	0.0	-1.8*	-.81				0	7	A331	ML1m
31	MCM10546F	1024	1	S	BEX	40n	25n$	754m	5.2	0.0	-1.4	-1.1	50m☑			5	C	A420	FL34
32	MCM10546L	1024	1	S	BEX	40n	25n$	754m	5.2	0.0	-1.4	-1.1	50m☑			5	C	A420	ML372
33#	GXB10415	1024	1	S	BEX	60nØ	35n$Ø	780mØ	5.2	0.0	-1.4	-1.1	50m☑			0	7	A331	ML176
34	N93415AF	1024	1	S	BTD						.85	2.1	16m	.45				A242	ML127r
35	N93425AF	1024	1	S	BTD						.85	2.1	16m	.45				A242	ML127r
36	N82S10N	1024	1	S	BTD	40n	40n	850m	0.0	5.0	.85	2.1△	16m	.45		0	7	A242	ML132
37	N82S11N	1024	1	S	BTD	40n	40n	850m	0.0	5.0	.85	2.1§	16m	.45		0	7	A242	ML132
38	N82LS10F	1024	1	S	BTD	45n	35n$	325m	0.0	5.0	.85	2.1△	16m	.45		0	7	A242	ML127r
39	N82LS10N	1024	1	S	BTD	45n	35n$	325m	0.0	5.0	.85	2.1△	16m	.45		0	7	A242	ML132
40	N82LS11F	1024	1	S	BTD	45n	35n$	325m	0.0	5.0	.85	2.1§	16m	.45		0	7	A242	ML127r
41	N82LS11N	1024	1	S	BTD	45n	35n$	325m	0.0	5.0	.85	2.1§	16m	.45		0	7	A242	ML132
42	N82S10F	1024	1	S	BTD	45n	35n$		0.0	5.0	.85	2.1△	16m	.45		0	7	A242	ML127r
43	N82S11F	1024	1	S	BTD	45n	35n$		0.0	5.0	.85	2.1§	16m	.45		0	7	A242	ML127r
44	SN74S214AJ	1024	1	S	BTD	45n	35n$	550mt	0.0	5.0	.80	2.0§	16m	.45		0	6	PN16am	ML61a
45	SN74S214AN	1024	1	S	BTD	45n	35n$	550mt	0.0	5.0	.80	2.0§	16m	.45		0	6	PN16am	ML48
46	SN74S314AJ	1024	1	S	BTD	45n	35n$	550mt	0.0	5.0	.80	2.0△	16m	.45		0	6	PN16am	ML61a
47	SN74S314AN	1024	1	S	BTD	45n	35n$	550mt	0.0	5.0	.80	2.0△	16m	.45		0	6	PN16am	ML48
48	N93L425N	1024	1	S	BTD	60n	45n$	325m	0.0	5.0	.85	2.1§	16m	.45		0	7	A242	ML132
49#	RC82S11F	1024	1	S	BTD	60n	60n	775m	0.0	5.0	.80	2.0§	16m	.50		5	C	A242	ML127r
50	S82LS10N	1024	1	S	BTD	70n	50n$	375m	0.0	5.0	.80	2.1△	16m	.50		5	C	A242	ML132
51	S82LS11N	1024	1	S	BTD	70n	50n$	375m	0.0	5.0	.80	2.1§	16m	.50		5	C	A242	ML132
52	S82S10N	1024	1	S	BTD	70n	50n$	850m	0.0	5.0	.80	2.1△	16m	.50		5	C	A242	ML132
53	S82S11N	1024	1	S	BTD	70n	50n$	850m	0.0	5.0	.80	2.1§	16m	.50		5	C	A242	ML132
54	S93L415F	1024	1	S	BTD	70n	50n$	375m	0.0	5.0	.80	2.1△	16m	.50		5	C	A242	ML127r
55	S93L415N	1024	1	S	BTD	70n	50n$	375m	0.0	5.0	.80	2.1△	16m	.50		5	C	A242	ML132
56	S93L425F	1024	1	S	BTD	70n	50n$	375m	0.0	5.0	.80	2.1§	16m	.50		5	C	A242	ML127r
57	S93L425N	1024	1	S	BTD	70n	50n$	375m	0.0	5.0	.80	2.1§	16m	.50		5	C	A242	ML132
58	SN74S214J	1024	1	S	BTD	70n	50n$	550mt	0.0	5.0	.80	2.0§	16m	.45		0	6	PN16am	ML61a
59	SN74S214N	1024	1	S	BTD	70n	50n$	550mt	0.0	5.0	.80	2.0§	16m	.45		0	6	PN16am	ML48
60	SN74S314J	1024	1	S	BTD	70n	50n$	550mt	0.0	5.0	.80	2.0△	16m	.45		0	6	PN16am	ML61a
61	SN74S314N	1024	1	S	BTD	70n	50n$	550mt	0.0	5.0	.80	2.0△	16m	.45		0	6	PN16am	ML48
62	SN54LS215J	1024	1	S	BTD	75ntØ	75n$	200mt	0.0	5.0	.80	2.0§	16m	.50		5	C	PN16ak	ML61a
63	SN54LS315J	1024	1	S	BTD	75ntØ	75n$	200mt	0.0	5.0	.80	2.0△	16m	.50		5	C	PN16ak	ML61a
64	SN54S214J	1024	1	S	BTD	75n	55n$	550mt	0.0	5.0	.80	2.0§	16m	.50		5	C	PN16am	ML61a
65	SN54S314J	1024	1	S	BTD	75n	55n$	550mt	0.0	5.0	.80	2.0△	16m	.50		5	C	PN16am	ML61a
66	SN74LS215J	1024	1	S	BTD	75ntØ	60n$	200mt	0.0	5.0	.80	2.0§	16m	.50		0	6	PN16ak	ML61a
67	SN74LS215N	1024	1	S	BTD	75ntØ	60n$	200mt	0.0	5.0	.80	2.0§	16m	.50		0	6	PN16ak	ML48
68	SN74LS315J	1024	1	S	BTD	75ntØ	60n$	200mt	0.0	5.0	.80	2.0△	16m	.50		0	6	PN16ak	ML61a
69	SN74LS315N	1024	1	S	BTD	75ntØ	60n$	200mt	0.0	5.0	.80	2.0△	16m	.50		0	6	PN16ak	ML48
70	SN74LS214J	1024	1	S	BTD	95n	60n$	200mt	0.0	5.0	.80	2.0§	16m	.50		0	6	PN16am	ML61a
71	SN74LS214N	1024	1	S	BTD	95n	60n$	200mt	0.0	5.0	.80	2.0§	16m	.50		0	6	PN16am	ML48
72	SN74LS314J	1024	1	S	BTD	95n	60n$	200mt	0.0	5.0	.80	2.0△	16m	.50		0	6	PN16am	ML61a
73	SN74LS314N	1024	1	S	BTD	95n	60n$	200mt	0.0	5.0	.80	2.0△	16m	.50		0	6	PN16am	ML48
74	SN74S209J	1024	1	S	BTD	100n	85n$	700m	0.0	5.0	.80	2.0§	16m	.45		0	7	A232	ML61a
75	SN74S209N	1024	1	S	BTD	100n	85n$	700m	0.0	5.0	.80	2.0§	16m	.45		0	7	A232	ML48
76	SN74S309J	1024	1	S	BTD	100n	85n$	700m	0.0	5.0	.80	2.0	16m	.45		0	7	A232a	ML61a
77	SN74S309N	1024	1	S	BTD	100n	85n$	700m	0.0	5.0	.80	2.0	16m	.45		0	7	A232a	ML48
78	SN54LS214J	1024	1	S	BTD	140n	75n$	200mt	0.0	5.0	.80	2.0§	16m	.50		5	C	PN16am	ML61a
79	SN54LS314J	1024	1	S	BTD	140n	75n$	200mt	0.0	5.0	.80	2.0△	16m	.50		5	C	PN16am	ML61a
80	93415ADC	1024	1	S	BTX	30n	20n$	775m	0.0	5.0	.80	2.1	16m	.45		0	7	A97	ML127e
81	93415AFC	1024	1	S	BTX	30n	20n$	775m	0.0	5.0	.80	2.1△	16m	.45		0	7	A97	FL14
82	93415APC	1024	1	S	BTX	30n	20n$	775m	0.0	5.0	.80	2.1△	16m	.45		0	7	A97	ML170
83	N82S110F	1024	1	S	BTX	30n	30n	775m	0.0	5.0	.85	2.1△	16m	.45		0	7	A242	ML127r
84	N82S110N	1024	1	S	BTX	30n	30n	775m	0.0	5.0		2.1△	16m	.45		0	7	A242	ML132
85	N82S111F	1024	1	S	BTX	30n	30n	775m	0.0	5.0	.85	2.1§	16m	.45		0	7	A242	ML127r
86	N82S111N	1024	1	S	BTX	30n	30n	775m	0.0	5.0	.85	2.1§	16m	.45		0	7	A242	ML132
87#	HM2510-2	1024	1	S	BTX	35n	25n$	775m	0.0	5.0	.80	2.1	16m	.45		0	7	A256	ML217
88	93415AI	1024	1	S	BTX	45n	45n	775m	0.0	5.0	.85	2.1△	16m	.45		0	7	A242	ML107
89	93415DC	1024	1	S	BTX	45n	30n$	775m	0.0	5.0	.80	2.1△	16m	.45		0	7	A97	ML127e
90	93415FC	1024	1	S	BTX	45n	30n$	775m	0.0	5.0	.80	2.1△	16m	.45		0	7	A97	FL14
91	93415PC	1024	1	S	BTX	45n	30n$	775m	0.0	5.0	.80	2.1△	16m	.45		0	7	A97	ML170
92	93425ADC	1024	1	S	BTX	45n	30n$	775m	0.0	5.0	.80	2.1§	16m	.45		0	7	A163	ML98a
93	93425AI	1024	1	S	BTX	45n	45n	775m	0.0	5.0	.85	2.1§	16m	.45		0	7	A242	ML107
94	93425APC	1024	1	S	BTX	45n	30n$	775m	0.0	5.0	.80	2.1§	16m	.45		0	7	A163	ML170
95#	HM2510-1	1024	1	S	BTX	45n	35n$	500uØ	0.0	5.0	.80	2.0	16m	.45		0	7	A97	ML217
96#	HM2511-1	1024	1	S	BTX	45n	35n$	775m	0.0	5.0	.80	2.1§	16m	.45		0	7	A163	ML89h
97	MCM93415DC	1024	1	S	BTX	45n	30n$	850m	0.0	5.0	.80	2.1△	16m	.45		0	7	A256	ML372
98	MCM93415PC	1024	1	S	BTX	45n	30n$	850m	0.0	5.0	.80	2.1△	16m	.45		0	7	A256	ML376
99	MCM93425DC	1024	1	S	BTX	45n	30n$	850m	0.0	5.0	.80	2.1§	16m	.45		0	7	A256	ML372
100	MCM93425PC	1024	1	S	BTX	45n	30n$	850m	0.0	5.0	.80	2.1§	16m	.45		0	7	A256	ML376
101	N82S10I	1024	1	S	BTX	45n	45n	800m	0.0	5.0	.85	2.1△	16m	.45		0	7	A242	ML107
102	N82S11I	1024	1	S	BTX	45n	45n	800m	0.0	5.0	.85	2.1§	16m	.45		0	7	A242	ML107
103#	N93L415F	1024	1	S	BTX	45n	45n	325m	0.0	5.0	.85	2.1△	16m	.45		0	7	A242	ML127r
104#	N93L415N	1024	1	S	BTX	45n	45n	325m	0.0	5.0	.85	2.1△	16m	.45		0	7	A242	ML132
105#	uPB2205D	1024	1	S	BTX	50n	60n$	775m	0.0	5.0	.80	2.0	16m	.50		2	7	A256	ML60e
106	93L415DC	1024	1	S	BTX	60n	45n$	325m	0.0	5.0	.80	2.1△	16m	.50		0	7	A97	ML127e
107	93L415FC	1024	1	S	BTX	60n	45n$	325m	0.0	5.0	.80	2.1	16m	.50		0	7	A97	FL14
108	93L415PC	1024	1	S	BTX	60n	45n$	325m	0.0	5.0	.80	2.1△	16m	.50		0	7	A97	ML170
109	93L425DC	1024	1	S	BTX	60n	45n$	325m	0.0	5.0	.80	2.1§	16m	.50		0	7	A163	ML127e
110	93L425FC	1024	1	S	BTX	60n	45n$	325m	0.0	5.0	.80	2.1§	16m	.50		0	7	A163	FL14

SYMBOLS AND CODES EXPLAINED IN INTERPRETER

2. READ-WRITE MEMORIES (RAMS)

IN ORDER OF (1)No.WORDS(2)No.BITS/WORD (3)MODE(4)STRUCT.(5)MAX ACC.TIME(6)TYPE No.

LINE No.	6 TYPE No.	ORGANIZATION 1 No. WORDS	2 BITS PER WORD	3 MODE	4 STRUCTURE CODE	5 MAX ACCESS TIME (s)	MAX WRITE CYCLE TIME (s)	MAX OPER. POWER DISS. (W)	RATED POWER SUP. SPAN NEG. (V)	POS. (V)	INPUT LOGIC LEVELS MAX '0' (V)	MIN '1' (V)	MIN OUTPUT SINK CURRENT (A)	@ OUT (V)	MIN CLOCK FREQ. (Hz)	OPER. TEMP. RANGE CODE -	+	DRAWINGS LOGIC/ BLOCK	OUTLINE
1	93L425PC	1024	1	S	BTX	60n	45n$	325m	0.0	5.0	.80	2.1§	16m	.50		0	7	A163	ML170
2	93415DM	1024	1	S	BTX	60n	40n$	850m	0.0	5.0	.80	2.1△	16m	.45		5	C	A97	ML127e
3	93415FM	1024	1	S	BTX	60n	40n$	850m	0.0	5.0	.80	2.1△	16m	.45		5	C	A97	FL14
4	MCM93415DM	1024	1	S	BTX	60n	40n$	850m	0.0	5.0	.80	2.1△	16m	.45		5	C	A256	ML372
5	MCM93415FM	1024	1	S	BTX	60n	40n$	850m	0.0	5.0	.80	2.1△	16m	.45		5	C	A256	ML376
6	MCM93425DM	1024	1	S	BTX	60n	40n$	850m	0.0	5.0	.80	2.1§	16m	.45		5	C	A256	ML372
7	MCM93425FM	1024	1	S	BTX	60n	40n$	850m	0.0	5.0	.80	2.1§	16m	.45		5	C	A256	ML376
8	93L415DM	1024	1	S	BTX	70n	50n$	375m	0.0	5.0	.80	2.1△	16m	.50		5	C	A97	ML127e
9	93L415FM	1024	1	S	BTX	70n	50n$	375m	0.0	5.0	.80	2.1△	16m	.50		5	C	A97	FL14
10	93L425DM	1024	1	S	BTX	70n	50n$	375m	0.0	5.0	.80	2.1§	16m	.50		5	C	A163	ML127e
11	93L425FM	1024	1	S	BTX	70n	50n$	375m	0.0	5.0	.80	2.1§	16m	.50		5	C	A163	FL14
12	93425DC	1024	1	S	BTX	70n	50n$	775m	0.0	5.0	.80	2.1§	16m	.45		0	7	A163	ML98a
13	93425PC	1024	1	S	BTX	70n	50n$	775m	0.0	5.0	.80	2.1§	16m	.45		0	7	A163	ML170
14#	HM2510	1024	1	S	BTX	70n	50n$	775m	0.0	5.0	.80	2.1	16m	.45		0	7	A256	ML217
15#	HM2511	1024	1	S	BTX	70n	50n$	775m	0.0	5.0	.80	2.1§	16m	.45		0	7	A163	ML89h
16#	RC82S111	1024	1	S	BTX	70n	75n	850m	0.0	5.0	.80	2.1§	16m	.50		5	C	A242	ML107
17	93425DM	1024	1	S	BTX	75n	55n$	850m	0.0	5.0	.80	2.1§	16m	.45		5	C	A163	ML98a
18	93425FM	1024	1	S	BTX	75n	55n$	850m	0.0	5.0	.80	2.1§	16m	.45		5	C	A163	FL14
19	N82S08I	1024	1	S	BTX	80n	35n$	300m†	0.0	5.0	.85	2.0	16m	.45		0	7	A210	ML107
20	MCM6518C-25	1024	1	S	HCG	200n	350n△		0.0	5.0	0.8	2.0	1.0u#△					A491	ML387
21	MCM6518P-25	1024	1	S	HCG	200n	350n△		0.0	5.0	0.8	2.0	1.0u#△			0	6	A491	ML388
22	MCM6508C-25	1024	1	S	HCG	250n	350n△		0.0	5.0	0.8	2.0	1.0u#△			0	6	A491	ML372
23	MCM6508P-25	1024	1	S	HCG	250n	350n△		0.0	5.0	0.8	2.0	1.0u#△			0	6	A491	ML376
24	MCM6508C-30	1024	1	S	HCG	300n	450n△		0.0	5.0	0.8	2.0	1.0u#△					A491	ML372
25	MCM6518C-30	1024	1	S	HCG	300n	450n△		0.0	5.0	0.8	2.0	1.0u#△					A491	ML387
26	MCM6518P-30	1024	1	S	HCG	300n	450n△		0.0	5.0	0.8	2.0	1.0u#△			0	6	A491	ML388
27	MCM6508P-30	1024	1	S	HCG	350n	450n△		0.0	5.0	0.8	2.0	1.0u#△			0	6	A491	ML376
28	MCM6508C-46	1024	1	S	HCG	460n	730n△		0.0	5.0	0.8	2.0	1.0u#△					A491	ML372
29	MCM6508P-46	1024	1	S	HCG	460n	730n△		0.0	5.0	0.8	2.0	1.0u#△			0	6	A491	ML376
30	MCM6518P-46	1024	1	S	HCG	460n	730n△		0.0	5.0	0.8	2.0	1.0u#△			0	6	A491	ML388
31	HM6508-2	1024	1	S	MCG			20m	0.0	5.0	.80	3.0				5	C	A402	
32	HM6508-5	1024	1	S	MCG			20m	0.0	5.0	.80	3.0				0	7	A402	
33	HM6508-9	1024	1	S	MCG			20m	0.0	5.0	.80	3.0				4	8	A402	
34	HM6518-2	1024	1	S	MCG			20m	0.0	5.0	.80	3.0				5	C	A405	
35	HM6518-5	1024	1	S	MCG			20m	0.0	5.0	.80	3.0				0	7	A405	
36	HM6518-9	1024	1	S	MCG			20m	0.0	5.0	.80	3.0				4	8	A405	
37	HM6518B2	1024	1	S	MCG			20m	0.0	5.0	.80	3.0				4	8	A405	
38▼	HM6518B9	1024	1	S	MCG			20m	0.0	5.0	.80	3.0				4	8	A405	
39	IM5608A-1ID	1024	1	S	MCG	95n		5.0ut♦	0.0	11	.80	9.0§	1.0u△			4	8	A509	ML395
40	IM5608A-1IJ	1024	1	S	MCG	95n		5.0ut♦	0.0	11	.80	9.0§	1.0u△			4	8	A509	ML396
41	IM5608A-1MD	1024	1	S	MCG	95n		5.0ut♦	0.0	11	.80	9.0§	1.0u△			5	C	A509	ML395
42	IM5608A-1MF	1024	1	S	MCG	95n		5.0ut♦	0.0	11	.80	9.0§	1.0u△			5	C	A509	FL76
43	IM5608A-1MS	1024	1	S	MCG	95n		5.0ut♦	0.0	11	.80	9.0§	1.0u△			5	C	A509	ML396
44	IM6518A-1ID	1024	1	S	MCG	95n		5.0ut♦	0.0	11	.80	9.0§	1.0u△			4	8	A509	ML397
45	IM6518A-1IJ	1024	1	S	MCG	95n		5.0ut♦	0.0	11	.80	9.0§	1.0u△			4	8	A509	ML398
46	IM6518A-1MD	1024	1	S	MCG	95n		5.0ut♦	0.0	11	.80	9.0§	1.0u△			5	C	A509	ML397
47	IM6518A-1MF	1024	1	S	MCG	95n		5.0ut♦	0.0	11	.80	9.0§	1.0u△			5	C	A509	FL77
48	IM6518A-1MS	1024	1	S	MCG	95n		5.0ut♦	0.0	11	.80	9.0§	1.0u△			5	C	A509	ML398
49	IM5608AID	1024	1	S	MCG	150n		5.0ut♦	0.0	11	.80	9.0§	1.0u△			4	8	A509	ML395
50	IM5608AIJ	1024	1	S	MCG	150n		5.0ut♦	0.0	11	.80	9.0§	1.0u△			4	8	A509	ML396
51	IM5608AMD	1024	1	S	MCG	150n		5.0ut♦	0.0	11	.80	9.0§	1.0u△			5	C	A509	ML395
52	IM5608AMF	1024	1	S	MCG	150n		5.0ut♦	0.0	11	.80	9.0§	1.0u△			5	C	A509	FL76
53	IM5608AMJ	1024	1	S	MCG	150n		5.0ut♦	0.0	11	.80	9.0§	1.0u△			5	C	A509	ML396
54	IM6518AID	1024	1	S	MCG	150n		5.0ut♦	0.0	11	.80	9.0§	1.0u△			4	8	A509	ML397
55	IM6518AIJ	1024	1	S	MCG	150n		5.0ut♦	0.0	11	.80	9.0§	1.0u△			4	8	A509	ML398
56	IM6518AMD	1024	1	S	MCG	150n		5.0ut♦	0.0	11	.80	9.0§	1.0u△			5	C	A509	ML397
57	IM6518AMF	1024	1	S	MCG	150n		5.0ut♦	0.0	11	.80	9.0§	1.0u△			5	C	A509	FL77
58	IM6518AMJ	1024	1	S	MCG	150n		5.0ut♦	0.0	11	.80	9.0§	1.0u△			5	C	A509	ML398
59	NMC6508BJ-2	1024	1	S	MCG	180n	280n$	50u♦	0.0	5.0	.80	3.0§	3.2m	.40		5	C	A402	ML280
60	NMC6508BJ-9	1024	1	S	MCG	180n	280n$	50u♦	0.0	5.0	.80	3.0§	3.2m	.40		4	8	A402	ML280
61	NMC6508BN-9	1024	1	S	MCG	180n	280n	50u♦	0.0	5.0	.80	3.0§	3.2m	.40		4	8	A402	ML178
62	NMC6518AJ-9	1024	1	S	MCG	180n	280n	50u♦	0.0	5.0	.80	3.0	3.2m	.40		4	8	A188	
63	NMC6518BJ-2	1024	1	S	MCG	180n	280n	50u♦	0.0	5.0	.80	3.0§	3.2m	.40		5	C	A475	ML194e
64	NMC6518BJ-9	1024	1	S	MCG	180n	280n	50u♦	0.0	5.0	.80	3.0§	3.2m	.40		4	8	A475	ML194e
65	NMC6518BN-9	1024	1	S	MCG	180n	280n	50u♦	0.0	5.0	.80	30§	3.2m	.40		4	8	A475	ML196
66	MM74C929J	1024	1	S	MCG	240n	255n*	500m☑	0.0	5.0	.80	3.0§	1.0u△	5.0		4	8	M352	ML☑
67	MM74C929N	1024	1	S	MCG	240n	255n*	50u♦	0.0	5.0	.80	3.0§	2.0m	.40		4	8	A352	ML178
68	MM74C930J	1024	1	S	MCG	240n	255n*	500m☑	0.0	5.0	.80	3.0§	1.0u△	5.0		4	8	M352a	ML☑
69	MM74C930N	1024	1	S	MCG	240n	255n*	50u♦	0.0	5.0	.80	3.0§	2.0m	.40		4	8	A352a	ML196
70	NMC6508J-2	1024	1	S	MCG	250n	350n	50u♦	0.0	5.0	.80	3.0§	3.2m	.40		5	C	A402	ML280
71	NMC6508J-9	1024	1	S	MCG	250n	350n	50u♦	0.0	5.0	.80	3.0§	3.2m	.40		4	8	A402	ML280
72	NMC6508N-9	1024	1	S	MCG	250n	350n	50u♦	0.0	5.0	.80	3.0§	3.2m	.40		4	8	A402	ML178
73	NMC6518J-2	1024	1	S	MCG	250n	350n	50u♦	0.0	5.0	.80	30§	3.2m	.40		5	C	A475	ML194e
74	NMC6518J-9	1024	1	S	MCG	250n	350n	50u♦	0.0	5.0	.80	3.0§	3.2m	.40		4	8	A475	ML194e
75	NMC6518N-9	1024	1	S	MCG	250n	350n	50u♦	0.0	5.0	.80	3.0§	3.2m	.40		4	8	A475	ML194e
76	uPD443/6508D-1	1024	1	S	MCG	250n		500u	0.0	5.0	.80	2.0				0	7		
77	MM54C929J	1024	1	S	MCG	265n	290n*	500m☑	0.0	5.0	.80	3.0§	1.0u△	5.0		5	C	M352	ML☑
78	MM54C930J	1024	1	S	MCG	265n	290n*	500m☑	0.0	5.0	.80	3.0§	1.0u△	5.0		5	C	M352a	ML☑
79	IM5608-1ID	1024	1	S	MCG	300n		5.0ut♦	0.0	5.0	.80	3.0§	1.0u△			4	8	A509	ML395
80	IM5608-1IJ	1024	1	S	MCG	300n		5.0ut♦	0.0	5.0	.80	3.0§	1.0u△			4	8	A509	ML396
81	IM5608-1MD	1024	1	S	MCG	300n		5.0ut♦	0.0	5.0	.80	3.0§	1.0u△			5	C	A509	ML395
82	IM5608-1MF	1024	1	S	MCG	300n		5.0ut♦	0.0	5.0	.80	3.0§	1.0u△			5	C	A509	FL76
83	IM5608-1MJ	1024	1	S	MCG	300n		5.0ut♦	0.0	5.0	.80	3.0§	1.0u△			5	C	A509	ML396
84	IM6518-1ID	1024	1	S	MCG	300n		5.0ut♦	0.0	5.0	.80	3.0§	1.0u△			4	8	A509	ML397
85	IM6518-1IJ	1024	1	S	MCG	300n		5.0ut♦	0.0	5.0	.80	3.0§	1.0u△			4	8	A509	ML398
86	IM6518-1MD	1024	1	S	MCG	300n		5.0ut♦	0.0	5.0	.80	3.0§	1.0u△			5	C	A509	ML397
87	IM6518-1MF	1024	1	S	MCG	300n		5.0ut♦	0.0	5.0	.80	3.0§	1.0u△			5	C	A509	FL77
88	IM6518-1MJ	1024	1	S	MCG	300n		5.0ut♦	0.0	5.0	.80	3.0§	1.0u△			5	C	A509	ML398
89	MCM146508-1L	1024	1	S	MCG	300n	500n*	5.0u♦†	0.0	5.0	.80	3.0§	2.0m	.40		4	8	A402	ML372
90	MCM146508-1P	1024	1	S	MCG	300n	500n*	5.0u♦†	0.0	5.0	.80	3.0§	2.0m	.40		4	8	A402	ML376
91	MCM146508-2L	1024	1	S	MCG	300n	500n*	5.0u♦†	0.0	5.0	.40%	2.4§	2.0m	.40		5	C	A402	ML372
92	MCM146518-1L	1024	1	S	MCG	300n	500n*	5.0u♦†	0.0	5.0	.80	3.0§	2.0m	.40		4	8	A405	ML370
93	MCM146518-1P	1024	1	S	MCG	300n	500n*	5.0u♦†	0.0	5.0	.80	3.0§	2.0m	.40		4	8	A405	ML265
94	MCM146518-2L	1024	1	S	MCG	300n	500n*	5.0u♦†	0.0	5.0	.40%	2.4§	2.0m	.40		5	C	A405	ML370
95	NMC6508J-5	1024	1	S	MCG	300n	450n	500u♦	0.0	5.0	.80	3.0§	3.2m	.40		0	7	A402	ML280
96	NMC6508N-5	1024	1	S	MCG	300n	450n	500u♦	0.0	5.0	.80	3.0§	3.2m	.40		0	7	A402	ML178
97	NMC6518J-5	1024	1	S	MCG	300n	450n	500u♦	0.0	5.0	.80	3.0§	3.2m	.40		0	7	A475	ML194e
98	NMC6518N-5	1024	1	S	MCG	300n	450n	500u♦	0.0	5.0	.80	3.0§	3.2m	.40		0	7	A475	ML194e
99#	uPD443C-1	1024	1	S	MCG	300n	165n$	500u	0.0	5.0	.80	3.0	2.0m	.45		4	8	A256	ML349
100#	uPD443D-1	1024	1	S	MCG	300n	165n$	500u	0.0	5.0	.80	3.0	2.0m	.45		4	8	A256	ML60d
101	MM74C929J-3	1024	1	S	MCG	315n	330n*	500m☑	0.0	5.0	.80	3.0§	1.0u△	5.0		0	7	M352	ML☑
102	MM74C929N-3	1024	1	S	MCG	315n	330n*	500m☑	0.0	5.0	.80	3.0§	1.0u△	5.0		0	7	M352	ML☑
103	MM74C930J-3	1024	1	S	MCG	315n	330n*	500m☑	0.0	5.0	.80	3.0§	1.0u△	5.0		0	7	M352a	ML☑
104	MM74C930N-3	1024	1	S	MCG	315n	330n*	500m☑	0.0	5.0	.80	3.0§	1.0u△	5.0		0	7	M352a	ML☑
105	TC5508P	1024	1	S	MCG	370n	450n*	55m	0.0	5.0	0.8	2.5	2.0m	.40		3	8	A520	ML349
106	TC5508P-4	1024	1	S	MCG	450n	550n*	55m	0.0	5.0	0.8	2.5	2.0m	0.4		3	8	A520	ML349
107#	uPD443C	1024	1	S	MCG	450n	300n$	500u	0.0	5.0	.80	3.0	2.0m	.45		4	8	A256	ML349
108#	uPD443D	1024	1	S	MCG	450n	300n$	500u	0.0	5.0	.80	3.0	2.0m	.45		4	8	A256	ML60d
109	IM5608ID	1024	1	S	MCG	460n		5.0ut♦	0.0	5.0	.80	3.0§	5.0u△			4	8	A509	ML395
110	IM5608IJ	1024	1	S	MCG	460n		5.0ut♦	0.0	5.0	.80	3.0§	5.0u△			4	8	A509	ML396

SYMBOLS AND CODES EXPLAINED IN INTERPRETER

2. READ-WRITE MEMORIES (RAMS)

IN ORDER OF (1)No.WORDS(2)No.BITS/WORD (3)MODE(4)STRUCT.(5)MAX ACC.TIME(6)TYPE No.

LINE No.	6 TYPE No.	ORGANIZATION 1 No. WORDS	2 BITS PER WORD	3 MODE	4 STRUCTURE CODE	5 MAX ACCESS TIME (s)	MAX WRITE CYCLE TIME (s)	MAX OPER. POWER DISS. (W)	RATED POWER SUP. SPAN NEG. (V)	POS. (V)	INPUT LOGIC LEVELS MAX '0' (V)	MIN '1' (V)	MIN OUTPUT SINK CURRENT (A)	@ OUT (V)	MIN CLOCK FREQ. (Hz)	OPER. TEMP. RANGE CODE -	+	DRAWINGS LOGIC/ BLOCK	OUTLINE
1	IM5608IP	1024	1	S	MCG	460n		5.0u♦	0.0	5.0	.80	3.0§	5.0u△			4	8	A509	ML399
2	IM5608MD	1024	1	S	MCG	460n		5.0u♦	0.0	5.0	.80	3.0§	1.0u△			5	C	A509	ML395
3	IM5608MF	1024	1	S	MCG	460n		5.0u♦	0.0	5.0	.80	3.0§	1.0u△			5	C	A509	FL76
4	IM5608MJ	1024	1	S	MCG	460n		5.0u♦	0.0	5.0	.80	3.0§	1.0u△			5	C	A509	ML396
5	IM6508IDE	1024	1	S	MCG	460n	300n$	500u♦	0.0	5.0	.80	3.0§	2.0m	.45		4	8	A188a	ML1a
6	IM6518ID	1024	1	S	MCG	460n		5.0u♦	0.0	5.0	.80	3.0§	5.0u△			4	8	A509	ML397
7	IM6518IJ	1024	1	S	MCG	460n		5.0u♦	0.0	5.0	.80	3.0§	5.0u△			4	8	A509	ML398
8	IM6518IP	1024	1	S	MCG	460n		5.0u♦	0.0	5.0	.80	3.0§	5.0u△			4	8	A509	ML402
9	IM6518MD	1024	1	S	MCG	460n		5.0u♦	0.0	5.0	.80	3.0§	1.0u△			5	C	A509	ML397
10	IM6518MF	1024	1	S	MCG	460n		5.0u♦	0.0	5.0	.80	3.0§	1.0u△			5	C	A509	FL77
11	IM6518MJ	1024	1	S	MCG	460n		5.0u♦	0.0	5.0	.80	3.0§	1.0u△			5	C	A509	ML398
12	MCM146508L	1024	1	S	MCG	460n	760n*	25u♦†	0.0	5.0	.80	3.0§	2.0m	.40		4	8	A402	ML372
13	MCM146508P	1024	1	S	MCG	460n	760n*	25u♦†	0.0	5.0	.80	3.0§	2.0m	.40		4	8	A402	ML376
14	MCM146518L	1024	1	S	MCG	460n	760n*	25u♦†	0.0	5.0	.80	3.0§	2.0m	.40		4	8	A405	ML370
15	MCM146518P	1024	1	S	MCG	460n	760n*	25u♦†	0.0	5.0	.80	3.0§	2.0m	.40		4	8	A405	ML265
16	TC5508P-1	1024	1	S	MCG	550n	700n*	55m	0.0	5.0	0.8	2.5	2.0m	0.4		3	8	A520	ML349
17	IM5608CJ	1024	1	S	MCG	600n		5.0u♦	0.0	5.0	.80	3.0§	5.0u△			0	7	A509	ML396
18	IM5608CP	1024	1	S	MCG	600n		5.0u♦	0.0	5.0	.80	3.0§	5.0u△			0	7	A509	ML399
19	IM6518CJ	1024	1	S	MCG	600n		5.0u♦	0.0	5.0	.80	3.0§	5.0u△			0	7	A509	ML398
20	IM6518CP	1024	1	S	MCG	600n		5.0u♦	0.0	5.0	.80	3.0§	5.0u△			0	7	A509	ML402
21▼	CDP1821CD	1024	1	S	MCS	125n†	275n*	500m△☑	0.0	6.5	1.5	3.5	2.0m	0.4		5	C	A524	
22	CDP1821CE	1024	1	S	MCS	125n†	275n*	500m△☑	0.0	6.5	1.5	3.5	2.0m	0.4		4	8		MO001AC
23	CDP1821D	1024	1	S	MCS	125n†	275n*	500m△☑	0.0	10	1.5	3.5	2.0m	0.4		5	C		
24▼	CDP1821E	1024	1	S	MCS	125n†	275n*	500m△☑	0.0	10	1.5	3.5	2.0m	0.4		4	8	A524	MO001AC
25	CDP1821SCD	1024	1	S	MCS	350n	150n$	8.0m	0.5	7.0 #	.01%	4.9	3.5m	.50		2	8	A498	ML140
26	CDP1821SD	1024	1	S	MCS	350n	150n$	5.0m	0.5	11 #	.01%	4.9	3.5m	.50		2	8	A498	ML140
27#	HEF4736B	1024	1	S	MCX			400m☑	0.0	15	4.0	11§	2.4m	1.5		4	8	A362	ML2g
28#	HEF4736P	1024	1	S	MCX			400m☑	0.0	15	4.5	10.5	3.6m	.50		4	8	A362	ML☑
29	IM65X08A-1ID	1024	1	S	MCX	125n		55u♦	0.0	10	.80	7.0§	1.0u△			4	8	A505	ML395
30	IM65X08A-1IJ	1024	1	S	MCX	125n		55u♦	0.0	10	.80	7.0§	1.0u△			4	8	A505	ML396
31	IM65X18A-1ID	1024	1	S	MCX	125n		55u♦	0.0	10	.80	7.0§	1.0u△			0	7	A505	ML397
32	IM65X18A-1IJ	1024	1	S	MCX	125n		55u♦	0.0	10	.80	7.0§	1.0u△			0	7	A505	ML398
33	IM65X08-1ID	1024	1	S	MCX	180n		55u♦	0.0	5.0	.80	3.0§	1.0u△			4	8	A505	ML395
34	IM65X08-1IJ	1024	1	S	MCX	180n		55u♦	0.0	5.0	.80	3.0§	1.0u△			4	8	A505	ML396
35	IM65X08-1MD	1024	1	S	MCX	180n		55u♦	0.0	5.0	.80	3.0§	1.0u△			5	C	A505	ML395
36	IM65X08-1MF	1024	1	S	MCX	180n		55u♦	0.0	5.0	.80	3.0§	1.0u△			5	C	A505	FL76
37	IM65X08-1MJ	1024	1	S	MCX	180n		55u♦	0.0	5.0	.80	3.0§	1.0u△			5	C	A505	ML396
38	IM65X18-1ID	1024	1	S	MCX	180n		55u♦	0.0	5.0	.80	3.0§	1.0u△			0	7	A505	ML397
39	IM65X18-1IJ	1024	1	S	MCX	180n		55u♦	0.0	5.0	.80	3.0§	1.0u△			0	7	A505	ML398
40	IM65X18-1MD	1024	1	S	MCX	180n		55u♦	0.0	5.0	.80	3.0§	1.0u△			5	C	A505	ML397
41	IM65X18-1MF	1024	1	S	MCX	180n		55u♦	0.0	5.0	.80	3.0§	1.0u△			5	C	A505	FL77
42	IM65X18-1MJ	1024	1	S	MCX	180n		55u♦	0.0	5.0	.80	3.0§	1.0u△			5	C	A505	ML398
43▼	MBC6508A	1024	1	S	MCX	185n	760n	11m	0.0	5.0	0.8	2.5	2.0m	0.45		5	C		
44	IM65X08A-1MD	1024	1	S	MCX	200n		55u♦	0.0	10	.80	7.0§	1.0u△			5	C	A505	ML395
45	IM65X08A-1MF	1024	1	S	MCX	200n		55u♦	0.0	10	.80	7.0§	1.0u△			5	C	A505	FL76
46	IM65X08A-1MJ	1024	1	S	MCX	200n		55u♦	0.0	10	.80	7.0§	1.0u△			5	C	A505	ML396
47	IM65X08AID	1024	1	S	MCX	200n		55u♦	0.0	10	.80	7.0§	1.0u△			4	8	A505	ML395
48	IM65X08AIJ	1024	1	S	MCX	200n		55u♦	0.0	10	.80	7.0§	1.0u△			4	8	A505	ML396
49	IM65X08AMD	1024	1	S	MCX	200n		55u♦	0.0	10	.80	7.0§	1.0u△			5	C	A505	ML395
50	IM65X08AMF	1024	1	S	MCX	200n		55u♦	0.0	10	.80	7.0§	1.0u△			5	C	A505	FL76
51	IM65X08AMJ	1024	1	S	MCX	200n		55u♦	0.0	10	.80	7.0§	1.0u△			5	C	A505	ML396
52	IM65X18A-1MF	1024	1	S	MCX	200n		55u♦	0.0	10	.80	7.0§	1.0u△			5	C	A505	FL77
53	IM65X18A-1MJ	1024	1	S	MCX	200n		55u♦	0.0	10	.80	7.0§	1.0u△			5	C	A505	ML398
54	IM65X18AID	1024	1	S	MCX	200n		55u♦	0.0	10	.80	7.0§	1.0u△			0	7	A505	ML397
55	IM65X18AIJ	1024	1	S	MCX	200n		55u♦	0.0	10	.80	7.0§	1.0u△			0	7	A505	ML398
56	IM65X18AMD	1024	1	S	MCX	200n		55u♦	0.0	10	.80	7.0§	1.0u△			5	C	A505	ML397
57	IM65X18AMF	1024	1	S	MCX	200n		55u♦	0.0	10	.80	7.0§	1.0u△			5	C	A505	FL77
58	IM65X18AMJ	1024	1	S	MCX	200n		55u♦	0.0	10	.80	7.0§	1.0u△			5	C	A505	ML398
59	IM65X08HJ	1024	1	S	MCX	250n		55u♦	0.0	5.0	.80	3.0§	1.0u△			5	C	A505	ML396
60	IM65X08ID	1024	1	S	MCX	250n		55u♦	0.0	5.0	.80	3.0§	5.0u△			4	8	A505	ML395
61	IM65X08IJ	1024	1	S	MCX	250n		55u♦	0.0	5.0	.80	3.0§	5.0u△			4	8	A505	ML396
62	IM65X08MD	1024	1	S	MCX	250n		55u♦	0.0	5.0	.80	3.0§	1.0u△			5	C	A505	ML395
63	IM65X08MF	1024	1	S	MCX	250n		55u♦	0.0	5.0	.80	3.0§	1.0u△			5	C	A505	FL76
64	IM65X08MJ	1024	1	S	MCX	250n		55u♦	0.0	5.0	.80	3.0§	1.0u△			5	C	A505	ML396
65	IM65X18ID	1024	1	S	MCX	250n		55u♦	0.0	5.0	.80	3.0§	1.0u△			0	7	A505	ML397
66	IM65X18IJ	1024	1	S	MCX	250n		55u♦	0.0	5.0	.80	3.0§	1.0u△			0	7	A505	ML398
67	IM65X18MD	1024	1	S	MCX	250n		55u♦	0.0	5.0	.80	3.0§	1.0u△			5	C	A505	ML397
68	IM65X18MF	1024	1	S	MCX	250n		55u♦	0.0	5.0	.80	3.0§	1.0u△			5	C	A505	FL77
69	IM65X18MJ	1024	1	S	MCX	250n		55u♦	0.0	5.0	.80	3.0§	1.0u△			5	C	A505	ML398
70	IM65X08CJ	1024	1	S	MCX	300n		55u♦	0.0	5.0	.80	3.0§	5.0u△			0	7	A505	ML396
71	IM65X18CJ	1024	1	S	MCX	300n		55u♦	0.0	5.0	.80	3.0§	5.0u△			0	7	A505	ML398
72	S6508-1	1024	1	S	MCX	300n	300n	10m	0.0	5.0	.80	3.0§	2.0m	.45		0	7	A461	ML4d
73▼	SCM5102-1A	1024	1	S	MCX	350n	350n*	300m△	0.0	5.0	0.65	2.2§	1.0u△			0	7	A350	
74	SCM5102-1	1024	1	S	MCX	450n	450n*	135m	0.0	5.0	.80	2.0§	2.0m	.40		0	7	A530	ML☑
75	S6508	1024	1	S	MCX	460n	460n	10m	0.0	5.0	.80	3.0§	2.0m	.45		0	7	A461	ML4d
76	S6508A	1024	1	S	MCX	460n	460n	21m	0.0	10	2.0	7.0§	2.0m	.45		0	7	A461	ML4d
77	4736BDC	1024	1	S	MCX	500n$†	180n$†	1.3m♦	0.0	5.0	1.5	3.5§	400u	.40		4	8	A344	ML157e
78	4736BDM	1024	1	S	MCX	500n$†	180n$†	1.3m♦	0.0	5.0	1.5	3.5§	400u	.40		5	C	A344	ML157e
79	4736BFC	1024	1	S	MCX	500n$†	180n$†	1.3m♦	0.0	5.0	1.5	3.5§	400u	.40		4	8	A344	FL14j
80	4736BFM	1024	1	S	MCX	500n$†	180n$†	1.3m♦	0.0	5.0	1.5	3.5§	400u	.40		5	C	A344	FL14j
81	4736BFC	1024	1	S	MCX	500n$†	180n$†	1.3m♦	0.0	5.0	1.5	3.5§	400u	.40		4	8	A344	ML170
82	SCM5102-3	1024	1	S	MCX	650n	650n*	135m	0.0	5.0	.80	2.0§	2.0m	.40		0	7	A530	ML☑
83	SCM5102-8	1024	1	S	MCX	800n	800n*	150m	0.0	5.0	.80	2.0§	2.0m	.40		0	7	A380	ML☑
84	AM9102EDC	1024	1	S	MNG		200n△*	250m	0.0	5.0	.80	2.0				0	7		
85	AM9102EPC	1024	1	S	MNG		200n△*	250m	0.0	5.0	.80	2.0				0	7		
86	MCM2115AL	1024	1	S	MNG				0.0	5.0		△						A256	ML371
87	MCM2125AL	1024	1	S	MNG				0.0	5.0		§						A256	ML371
88#	HM2112A	1024	1	S	MNG	7.5n	6.0n	150m	0.0	5.0	1475	810	30m☑			0	7	A97b	ML☑
89#	HM2112B	1024	1	S	MNG	7.5n	6.0n	150m	0.0	5.0	1850	1105	30m☑			0	7	A97b	ML☑
90▼	D2125H1	1024	1	S	MNG	20n	15n$	814m	0.0	5.0	.80	2.1§	16m	.45		0	7	A256	ML359
91▼	D2115H2	1024	1	S	MNG	25n	20n$	656m	0.0	5.0	.80	2.1△	16m	.45		0	7	A256	ML359
92▼	D2125H2	1024	1	S	MNG	25n	20n$	656m	0.0	5.0	.80	2.1§	16m	.45		0	7	A256	ML359
93▼	D2115H3	1024	1	S	MNG	30n	20n$	525m	0.0	5.0	.80	2.1△	16m	.45		0	7	A256	ML359
94▼	D2115H4	1024	1	S	MNG	35n	25n$	656m	0.0	5.0	.80	2.1△	16m	.45		0	7	A256	ML359
95▼	D2125H4	1024	1	S	MNG	35n	25n$	656m	0.0	5.0	.80	2.1§	16m	.45		0	7	A256	ML359
96	D2115A	1024	1	S	MNG	45n	35n$	625m	0.0	5.0	.80	2.1	16m	.45		0	7	A256	ML359
97	D2115AL	1024	1	S	MNG	45n	30n$	394m	0.0	5.0	.80	2.1	16m	.45		0	7	A256	ML359
98	D2125A	1024	1	S	MNG	45n	35n$	625m	0.0	5.0	.80	2.1§	7.0m	.45		0	7	A256	ML359
99	D2125AL	1024	1	S	MNG	45n	30n$	394m	0.0	5.0	.80	2.1§	7.0m	.45		0	7	A256	ML359
100	MCM21L15AC-45	1024	1	S	MNG	45n	30n$	1.0	0.0	5.0	.80	2.1△				0	7	A256	ML372
101	MCM21L25AC-45	1024	1	S	MNG	45n	30n$	1.0	0.0	5.0	.80	2.1§				0	7	A256	ML372
102	MCM2115AC-45	1024	1	S	MNG	45n	30n$	1.0	0.0	5.0	.80	2.1△				0	7	A256	ML372
103	MCM2125AC-45	1024	1	S	MNG	45n	30n$	1.0	0.0	5.0	.80	2.1§				0	7	A256	ML372
104	MCM2115AC-55	1024	1	S	MNG	55n	40n$	1.0	0.0	5.0	.80	2.1△				0	7	A256	ML372
105	MCM2125AC-55	1024	1	S	MNG	55n	40n$	1.0	0.0	5.0	.80	2.1§				0	7	A256	ML372
106	MD2115A	1024	1	S	MNG	55n	40n$	690m	0.0	5.0	.80	2.1△	10m	.45		5	C	A256	ML157c
107	MD2125A	1024	1	S	MNG	55n	40n$	660m	0.0	5.0	.80	2.1§	5.0m	.45		5	C	A256	ML157c
108	D2115A-2	1024	1	S	MNG	70n	50n$	625m	0.0	5.0	.80	2.1	16m	.45		0	7	A256	ML359
109	D2115AL-2	1024	1	S	MNG	70n	45n$	394m	0.0	5.0	.80	2.1	16m	.45		0	7	A256	ML359
110	D2125A-2	1024	1	S	MNG	70n	50n$	625m	0.0	5.0	.80	2.1§	7.0m	.45		0	7	A256	ML359

SYMBOLS AND CODES EXPLAINED IN INTERPRETER

2. READ-WRITE MEMORIES (RAMS)

IN ORDER OF (1)No.WORDS(2)No.BITS/WORD (3)MODE(4)STRUCT.(5)MAX ACC.TIME(6)TYPE No.

LINE No.	6 TYPE No.	ORGANIZATION 1 No. WORDS	2 BITS PER WORD	3 MODE	4 STRUCTURE CODE	5 MAX ACCESS TIME (s)	MAX WRITE CYCLE TIME (s)	MAX OPER. POWER DISS. (W)	RATED POWER SUP. SPAN NEG. (V)	RATED POWER SUP. SPAN POS. (V)	INPUT LOGIC LEVELS MAX '0' (V)	INPUT LOGIC LEVELS MIN '1' (V)	MIN OUTPUT SINK CURRENT (A)	MIN OUTPUT SINK CURRENT @ OUT (V)	MIN CLOCK FREQ. (Hz)	OPER. TEMP. RANGE CODE -	OPER. TEMP. RANGE CODE +	DRAWINGS LOGIC/ BLOCK	DRAWINGS OUTLINE
1	D2125AL-2	1024	1	S	MNG	70n	45n$	394m	0.0	5.0	.80	2.1$	7.0m	.45		0	7	A256	ML359
2	MCM21L15AC-70	1024	1	S	MNG	70n	30n$	1.0	0.0	5.0	.80	2.1△				0	7	A256	ML372
3	MCM21L25AC-70	1024	1	S	MNG	70n	30n$	1.0	0.0	5.0	.80	2.1$				0	7	A256	ML372
4	MCM2115AC-70	1024	1	S	MNG	70n	50n$	1.0	0.0	5.0	.80	2.1△				0	7	A256	ML372
5	MCM2125AC-70	1024	1	S	MNG	70n	50n$	1.0	0.0	5.0	.80	2.1$				0	7	A256	ML372
6	MD2115AL	1024	1	S	MNG	75n	55n$	413m	0.0	5.0	.80	2.1△	10n	.45		5	C	A256	ML157c
7	MD2125AL	1024	1	S	MNG	75n	55n$	413m	0.0	5.0	.80	2.1$	5.0m	.45		5	C	A256	ML157c
8▼	S6508A1	1024	1	S	MNG	115n◪	80n$	10m	0.0	12	70$	20$	1.0u△			0	7	A461	ML◪
9	21F02-2F	1024	1	S	MNG	250n	250n*	350m	0.0	5.0	.80	2.0	2.1m	.40		0	7	A118a	ML127r
10	21F02-2I	1024	1	S	MNG	250n	250n*	350m	0.0	5.0	.80	2.0	2.1m	.40		0	7	A118a	ML107a
11	21F02-2N	1024	1	S	MNG	250n	250n*	350m	0.0	5.0	.80	2.0	2.1m	.40		0	7	A118a	ML132
12	21L02HDC	1024	1	S	MNG	250n	250n*	150m	0.0	5.0	.80	2.0$	2.1m	.40		0	7	A118	ML321
13	21L02HFC	1024	1	S	MNG	250n	250n*	150m	0.0	5.0	.80	2.0$	2.1m	.40		0	7	A118	FL14j
14	21L02HPC	1024	1	S	MNG	250n	250n*	150m	0.0	5.0	.80	2.0$	2.1m	.40		0	7	A118	ML170
15	2102HDC	1024	1	S	MNG	250n	250n*	275m	0.0	5.0	.80	2.0$	2.1m	.40		0	7	A118	ML321
16	2102HDL	1024	1	S	MNG	250n	250n*	350m	0.0	5.0	.80	2.0$	2.1m	.40		5	8	A118	ML321
17	2102HDM	1024	1	S	MNG	250n	250n*	350m	0.0	5.0	.80	2.0$	2.1m	.40		5	C	A118	ML321
18	2102HFC	1024	1	S	MNG	250n	250n*	275m	0.0	5.0	.80	2.0$	2.1m	.40		0	7	A118	FL14j
19	2102HFL	1024	1	S	MNG	250n	250n*	350m	0.0	5.0	.80	2.0$	2.1m	.40		5	8	A118	FL14j
20	2102HFM	1024	1	S	MNG	250n	250n*	350m	0.0	5.0	.80	2.0$	2.1m	.40		5	C	A118	FL14j
21	2102HPC	1024	1	S	MNG	250n	250n*	275m	0.0	5.0	.80	2.0$	2.1m	.40		0	7	A118	ML170
22	2102LHDC	1024	1	S	MNG	250n	250n*	150m	0.0	5.0	.80	2.0$	2.1m	.40		0	7	A118	ML321
23	2102LHDL	1024	1	S	MNG	250n	250n*	200m	0.0	5.0	.80	2.0$	2.1m	.40		5	8	A118	ML321
24	2102LHDM	1024	1	S	MNG	250n	250n*	200m	0.0	5.0	.80	2.0$	2.1m	.40		5	C	A118	ML321
25	2102LHFC	1024	1	S	MNG	250n	250n*	150m	0.0	5.0	.80	2.0$	2.1m	.40		0	7	A118	FL14j
26	2102LHFL	1024	1	S	MNG	250n	250n*	200m	0.0	5.0	.80	2.0$	2.1m	.40		5	8	A118	FL14j
27	2102LHFM	1024	1	S	MNG	250n	250n*	200m	0.0	5.0	.80	2.0$	2.1m	.40		5	C	A118	FL14j
28	2102LHPC	1024	1	S	MNG	250n	250n*	150m	0.0	5.0	.80	2.0$	2.1m	.40		0	7	A118	ML170
29	AM9102DDC	1024	1	S	MNG	250n	250n	250m	0.0	5.0	.80	2.0	3.2m	.40		0	7	A159	ML127k
30	AM9102DPC	1024	1	S	MNG	250n	250n	250m	0.0	5.0	.80	2.0	3.2m	.40		0	7	A159	ML89a
31	C2102A2	1024	1	S	MNG	250n	250n*	342m	0.0	5.0	.80	2.0$	2.1m	.40		0	7	A118	ML358
32	D2102A2	1024	1	S	MNG	250n	250n*	325m	0.0	5.0	.80	2.0	2.1m	.40		0	7	A118	ML359
33#	M2102AB1-2	1024	1	S	MNG	250n	250n*	342m	0.0	5.0	.80	2.0	2.1m	.40		0	7	A380	ML301
34#	M2102AD1-2	1024	1	S	MNG	250n	250n*	342m	0.0	5.0	.80	2.0	2.1m	.40		0	7	A380	ML302
35#	M2102AF1-2	1024	1	S	MNG	250n	250n*	342m	0.0	5.0	.80	2.0	2.1m	.40		0	7	A380	ML300
36#	M2102ALB1-2	1024	1	S	MNG	250n	250n*	342m	0.0	5.0	.80	2.0	2.1m	.40		0	7	A380	ML301
37#	M2102ALD1-2	1024	1	S	MNG	250n	250n*	342m	0.0	5.0	.80	2.0	2.1m	.40		0	7	A380	ML302
38#	M2102ALF1-2	1024	1	S	MNG	250n	250n*	342m	0.0	5.0	.80	2.0	2.1m	.40		0	7	A380	ML300
39	MM2102AJ-2	1024	1	S	MNG	250n	250n*	289m	0.0	5.0	.80	2.0$	3.2m	.40		0	7	A118	ML280
40	MM2102AJ-2L	1024	1	S	MNG	250n	250n*	174m	0.0	5.0	.80	2.0$	3.2m	.40		0	7	A118	ML280
41	MM2102AN-2	1024	1	S	MNG	250n	250n*	289m	0.0	5.0	.80	2.0$	3.2m	.40		0	7	A118	ML178
42	MM2102AN-2L	1024	1	S	MNG	250n	250n*	174m	0.0	5.0	.80	2.0$	3.2m	.40		0	7	A118	ML178
43	P2102A2	1024	1	S	MNG	250n	250n*	342m	0.0	5.0	.80	2.0	2.1m	.40		0	7	A118	ML361
44	P2102AL2	1024	1	S	MNG	250n	250n*	342m	0.0	5.0	.80	2.0	2.1m	.40		0	7	A118	ML361
45	AM91L02CDC	1024	1	S	MNG	300n	300n*	165m	0.0	5.0	.80	2.0	3.2m	.40		0	7	A159	ML127k
46	AM91L02CDM	1024	1	S	MNG	300n	300n*	165m	0.0	5.0	.80	2.0	3.2m	.40		5	C	A159	ML62c
47	AM91L02CPC	1024	1	S	MNG	300n	300n*	165m	0.0	5.0	.80	2.0	3.2m	.40		0	7	A159	ML89a
48	AM9102CDC	1024	1	S	MNG	300n	300n	250m	0.0	5.0	.80	2.0	3.2m	.40		0	7	A159	ML127k
49	AM9102CDM	1024	1	S	MNG	300n	300n	275m	0.0	5.0	.80	2.0	3.2m	.40		5	C	A159	ML62c
50	AM9102CPC	1024	1	S	MNG	300n	300n	250m	0.0	5.0	.80	2.0	3.2m	.40		0	7	A159	ML89a
51▼	D2125H3	1024	1	S	MNG	300n	20n$	525m	0.0	5.0	.80	2.1$	16m	.45		0	7	A256	ML359
52	21F02B	1024	1	S	MNG	350n	350n*		12	5.0	.65	2.2	1.9mØ	.40		0	7	A118a	ML85
53	21F02F	1024	1	S	MNG	350n	350n*	350m	0.0	5.0	.80	2.0	2.1m	.40		0	7	A118a	ML127r
54	21F02I	1024	1	S	MNG	350n	350n*	350m	0.0	5.0	.80	2.0	2.1m	.40		0	7	A118a	ML107a
55	21F02N	1024	1	S	MNG	350n	350n*	350m	0.0	5.0	.80	2.0	2.1m	.40		0	7	A118a	ML132
56	21L02FDC	1024	1	S	MNG	350n	350n*	150m	0.0	5.0	.80	2.0$	2.1m	.40		0	7	A118	ML321
57	21L02FFC	1024	1	S	MNG	350n	350n*	150m	0.0	5.0	.80	2.0$	2.1m	.40		0	7	A118	FL14j
58	21L02FPC	1024	1	S	MNG	350n	350n*	150m	0.0	5.0	.80	2.0$	2.1m	.40		0	7	A118	ML170
59	2102FDC	1024	1	S	MNG	350n	350n*	275m	0.0	5.0	.80	2.0$	2.1m	.40		0	7	A118	ML321
60	2102FDL	1024	1	S	MNG	350n	350n*	350m	0.0	5.0	.80	2.0$	2.1m	.40		5	8	A118	ML321
61	2102FDM	1024	1	S	MNG	350n	350n*	350m	0.0	5.0	.80	2.0$	2.1m	.40		5	C	A118	ML321
62	2102FFC	1024	1	S	MNG	350n	350n*	275m	0.0	5.0	.80	2.0$	2.1m	.40		0	7	A118	FL14j
63	2102FFL	1024	1	S	MNG	350n	350n*	350m	0.0	5.0	.80	2.0$	2.1m	.40		5	8	A118	FL14j
64	2102FFM	1024	1	S	MNG	350n	350n*	350m	0.0	5.0	.80	2.0$	2.1m	.40		5	C	A118	FL14j
65	2102FPC	1024	1	S	MNG	350n	350n*	275m	0.0	5.0	.80	2.0$	2.1m	.40		0	7	A118	ML170
66	2102LFDC	1024	1	S	MNG	350n	350n*	150m	0.0	5.0	.80	2.0$	2.1m	.40		0	7	A118	ML321
67	2102LFDL	1024	1	S	MNG	350n	350n*	200m	0.0	5.0	.80	2.0$	2.1m	.40		5	8	A118	ML321
68	2102LFDM	1024	1	S	MNG	350n	350n*	200m	0.0	5.0	.80	2.0$	2.1m	.40		5	C	A118	ML321
69	2102LFFC	1024	1	S	MNG	350n	350n*	150m	0.0	5.0	.80	2.0$	2.1m	.40		0	7	A118	FL14j
70	2102LFFL	1024	1	S	MNG	350n	350n*	200m	0.0	5.0	.80	2.0$	2.1m	.40		5	8	A118	FL14j
71	2102LFFM	1024	1	S	MNG	350n	350n*	200m	0.0	5.0	.80	2.0$	2.1m	.40		5	C	A118	FL14j
72	2102LFPC	1024	1	S	MNG	350n	350n*	150m	0.0	5.0	.80	2.0$	2.1m	.40		0	7	A118	ML170
73	C2102A	1024	1	S	MNG	350n	350n*	289m	0.0	5.0	.80	2.0$	2.1m	.40		0	7	A118	ML358
74	D2102A	1024	1	S	MNG	350n	350n*	275m	0.0	5.0	.80	2.0$	2.1m	.40		0	7	A118	ML359
75#	M2102AB1	1024	1	S	MNG	350n	350n*	289m	0.0	5.0	.80	2.0	2.1m	.40		0	7	A380	ML301
76#	M2102AD1	1024	1	S	MNG	350n	350n*	289m	0.0	5.0	.80	2.0	2.1m	.40		0	7	A380	ML302
77#	M2102AF1	1024	1	S	MNG	350n	350n*	289m	0.0	5.0	.80	2.0	2.1m	.40		0	7	A380	ML300
78#	M2102ALB1	1024	1	S	MNG	350n	350n*	174m	0.0	5.0	.80	2.0	2.1m	.40		0	7	A380	ML301
79#	M2102ALD1	1024	1	S	MNG	350n	350n*	174m	0.0	5.0	.80	2.0	2.1m	.40		0	7	A380	ML302
80#	M2102ALF1	1024	1	S	MNG	350n	350n*	174m	0.0	5.0	.80	2.0	2.1m	.40		0	7	A380	ML300
81	MM2102AJ	1024	1	S	MNG	350n	350n*	289m	0.0	5.0	.80	2.0$	3.2m	.40		0	7	A118	ML280
82	MM2102AJ-L	1024	1	S	MNG	350n	350n*	174m	0.0	5.0	.80	2.0$	3.2m	.40		0	7	A118	ML280
83	MM2102AN	1024	1	S	MNG	350n	350n*	289m	0.0	5.0	.80	2.0$	3.2m	.40		0	7	A118	ML178
84	MM2102AN-L	1024	1	S	MNG	350n	350n*	174m	0.0	5.0	.80	2.0$	3.2m	.40		0	7	A118	ML178
85	P2102A	1024	1	S	MNG	350n	350n*	289m	0.0	5.0	.80	2.0$	2.1m	.40		0	7	A118	ML361
86	P2102AL	1024	1	S	MNG	350n	350n*	174m	0.0	5.0	.80	2.0$	2.1m	.40		0	7	A118	ML361
87	21L02-3B	1024	1	S	MNG	400n	400n*		12	5.0	.65	2.2	1.9mØ	.40		0	7	A118a	ML85
88	21L02-3F	1024	1	S	MNG	400n	400n*	200m	0.0	5.0	.65	2.2$	1.9m	.45		0	7	A118a	ML127r
89	21L02-3I	1024	1	S	MNG	400n	400n*	200m	0.0	5.0	.65	2.2$	1.9m	.45		0	7	A118a	ML107a
90	21L02-3N	1024	1	S	MNG	400n	400n*	200m	0.0	5.0	.65	2.2$	1.9m	.45		0	7	A118a	ML132
91	AM91L02BDC	1024	1	S	MNG	400n	400n*	150m	0.0	5.0	.80	2.0	3.2m	.40		0	7	A159	ML127k
92	AM91L02BDM	1024	1	S	MNG	400n	400n*	175m	0.0	5.0	.80	2.0	3.2m	.40		5	C	A159	ML62c
93	AM91L02BFM	1024	1	S	MNG	400n	400n*	175m	0.0	5.0	.80	2.0	3.2m	.40		5	C	A159	FL33b
94	AM91L02BPC	1024	1	S	MNG	400n	400n*	150m	0.0	5.0	.80	2.0	3.2m	.40		0	7	A159	ML89a
95	AM9102BDC	1024	1	S	MNG	400n	400n	260m◪	0.0	5.0	.80	2.0	3.2m	.40		0	7	A159	ML127k
96	AM9102BDM	1024	1	S	MNG	400n	400n	275m	0.0	5.0	.80	2.0	3.2m	.40		5	C	A159	ML62c
97	AM9102BFM	1024	1	S	MNG	400n	400n	275m	0.0	5.0	.80	2.0	3.2m	.40		5	C	A159	FL33b
98	AM9102BPC	1024	1	S	MNG	400n	400n*	260m◪	0.0	5.0	.80	2.0	3.2m	.40		0	7	A159	ML89a
99	21F02-4F	1024	1	S	MNG	450n	450n*	350m	0.0	5.0	.80	2.0	2.1m	.40		0	7	A118a	ML127r
100	21F02-4I	1024	1	S	MNG	450n	450n*	350m	0.0	5.0	.80	2.0	2.1m	.40		0	7	A118a	ML107a
101	21F02-4N	1024	1	S	MNG	450n	450n*	350m	0.0	5.0	.80	2.0	2.1m	.40		0	7	A118a	ML132
102	21L021DC	1024	1	S	MNG	450n	450n*	150m	0.0	5.0	.80	2.0$	2.1m	.40		0	7	A118	ML321
103	21L021FC	1024	1	S	MNG	450n	450n*	150m	0.0	5.0	.80	2.0$	2.1m	.40		0	7	A118	FL14j
104	21L021PC	1024	1	S	MNG	450n	450n*	150m	0.0	5.0	.80	2.0$	2.1m	.40		0	7	A118	ML170
105	2102-1DC	1024	1	S	MNG	450n	450n*	275m	0.0	5.0	.80	2.0$	2.1m	.40		0	7	A118	ML321
106	2102-1DL	1024	1	S	MNG	450n	450n*	350m	0.0	5.0	.80	2.0$	2.1m	.40		5	8	A118	ML321
107	2102-1DM	1024	1	S	MNG	450n	450n*	350m	0.0	5.0	.80	2.0$	2.1m	.40		5	C	A118	ML321
108	2102-1FC	1024	1	S	MNG	450n	450n*	275m	0.0	5.0	.80	2.0$	2.1m	.40		0	7	A118	FL14j
109	2102-1FL	1024	1	S	MNG	450n	450n*	350m	0.0	5.0	.80	2.0$	2.1m	.40		5	8	A118	FL14j
110	2102-1FM	1024	1	S	MNG	450n	450n*	350m	0.0	5.0	.80	2.0$	2.1m	.40		5	C	A118	FL14j

SYMBOLS AND CODES EXPLAINED IN INTERPRETER

2. READ-WRITE MEMORIES (RAMS)

IN ORDER OF (1)No.WORDS(2)No.BITS/WORD (3)MODE(4)STRUCT.(5)MAX ACC.TIME(6)TYPE No.

LINE No.	6 TYPE No.	ORGANIZATION 1 No. WORDS	2 BITS PER WORD	3 MODE	4 STRUCTURE CODE	5 MAX ACCESS TIME (s)	MAX WRITE CYCLE TIME (s)	MAX OPER. POWER DISS. (W)	RATED POWER SUP. SPAN NEG. (V)	RATED POWER SUP. SPAN POS. (V)	INPUT LOGIC LEVELS MAX '0' (V)	INPUT LOGIC LEVELS MIN '1' (V)	MIN OUTPUT SINK CURRENT (A)	MIN OUTPUT SINK CURRENT @ OUT (V)	MIN CLOCK FREQ. (Hz)	OPER. TEMP. RANGE CODE -	OPER. TEMP. RANGE CODE +	DRAWINGS LOGIC/ BLOCK	DRAWINGS OUTLINE
1	2102-1PC	1024	1	S	MNG	450n	450n*	275m	0.0	5.0	.80	2.0§	2.1m	.40		0	7	A118	ML170
2	2102L1DC	1024	1	S	MNG	450n	450n*	150m	0.0	5.0	.80	2.0§	2.1m	.40		0	7	A118	ML321
3	2102L1DL	1024	1	S	MNG	450n	450n*	200m	0.0	5.0	.80	2.0§	2.1m	.40		5	8	A118	ML321
4	2102L1DM	1024	1	S	MNG	450n	450n*	200m	0.0	5.0	.80	2.0§	2.1m	.40		5	C	A118	ML321
5	2102L1FC	1024	1	S	MNG	450n	450n*	150m	0.0	5.0	.80	2.0§	2.1m	.40		0	7	A118	FL14j
6	2102L1FL	1024	1	S	MNG	450n	450n*	200m	0.0	5.0	.80	2.0§	2.1m	.40		5	8	A118	FL14j
7	2102L1FM	1024	1	S	MNG	450n	450n*	200m	0.0	5.0	.80	2.0§	2.1m	.40		5	C	A118	FL14j
8	2102L1PC	1024	1	S	MNG	450n	450n*	150m	0.0	5.0	.80	2.0§	2.1m	.40		0	7	A118	ML170
9	C2102A4	1024	1	S	MNG	450n	450n*	289m	0.0	5.0	.80	2.0§	2.1m	.40		0	7	A118	ML358
10	CM2102A4	1024	1	S	MNG	450n	450n*	1.0 ☑	0.0	5.0	.80	2.0	2.1m	.45		5	C	A118	ML10c
11	D2102A4	1024	1	S	MNG	450n	450n*	275m	0.0	5.0	.80	2.0	2.1m	.40		0	7	A118	ML359
12#	M5L2102AP-4	1024	1	S	MNG	450n	450n	200m	0.0	5.0	.65	2.2	2.1m	.40		0	7	A380	ML336
13#	M5L2102AS-4	1024	1	S	MNG	450n	450n	200m	0.0	5.0	.65	2.2	2.1m	.40		0	7	A380	ML337
14#	M2102AB1-4	1024	1	S	MNG	450n	450n*	289m	0.0	5.0	.80	2.0	2.1m	.40		0	7	A380	ML301
15#	M2102AD1-4	1024	1	S	MNG	450n	450n*	289m	0.0	5.0	.80	2.0	2.1m	.40		0	7	A380	ML302
16#	M2102AF1-4	1024	1	S	MNG	450n	450n*	289m	0.0	5.0	.80	2.0	2.1m	.40		0	7	A380	ML300
17#	M2102ALB1-4	1024	1	S	MNG	450n	450n*	174m	0.0	5.0	.80	2.0	2.1m	.40		0	7	A380	ML301
18#	M2102ALD1-4	1024	1	S	MNG	450n	450n*	174m	0.0	5.0	.80	2.0	2.1m	.40		0	7	A380	ML302
19#	M2102ALF1-4	1024	1	S	MNG	450n	450n*	174m	0.0	5.0	.80	2.0	2.1m	.40		0	7	A380	ML300
20	MM2102AJ-4	1024	1	S	MNG	450n	450n*	289m	0.0	5.0	.80	2.0§	3.2m	.40		0	7	A118	ML280
21	MM2102AJ-4L	1024	1	S	MNG	450n	450n*	174m	0.0	5.0	.80	2.0§	3.2m	.40		0	7	A118	ML280
22	MM2102AN-4	1024	1	S	MNG	450n	450n*	289m	0.0	5.0	.80	2.0§	3.2m	.40		0	7	A118	ML178
23	MM2102AN-4L	1024	1	S	MNG	450n	450n*	174m	0.0	5.0	.80	2.0§	3.2m	.40		0	7	A118	ML178
24	P2102A4	1024	1	S	MNG	450n	450n*	289m	0.0	5.0	.80	2.0	2.1m	.40		0	7	A118	ML361
25	P2102AL4	1024	1	S	MNG	450n	450n*	174m	0.0	5.0	.80	2.0	2.1m	.40		0	7	A118	ML361
26	21L02-1B	1024	1	S	MNG	500n	500n*		12	5.0	.65	2.2	1.9mØ	.40		0	7	A118a	ML85
27	21L02-1F	1024	1	S	MNG	500n	500n*	200m	0.0	5.0	.65	2.2§	1.9m	.45		0	7	A118a	ML127r
28	21L02-1I	1024	1	S	MNG	500n	500n*	200m	0.0	5.0	.65	2.2§	1.9m	.45		0	7	A118a	ML107a
29	AM91L02ADC	1024	1	S	MNG	500n	500n*	150m	0.0	5.0	.80	2.0	3.2m	.40		0	7	A159	ML127k
30	AM91L02ADM	1024	1	S	MNG	500n	500n*	175m	0.0	5.0	.80	2.0	3.2m	.40		5	C	A159	ML62c
31	AM91L02AFM	1024	1	S	MNG	500n	500n*	175m	0.0	5.0	.80	2.0	3.2m	.40		5	C	A159	FL33b
32	AM91L02APC	1024	1	S	MNG	500n	500n*	150m	0.0	5.0	.80	2.0	3.2m	.40		0	7	A159	ML89a
33	AM9102ADC	1024	1	S	MNG	500n	500n	260m☑	0.0	5.0	.80	2.0	3.2m	.40		0	7	A159	ML127k
34	AM9102ADM	1024	1	S	MNG	500n	500n	275m	0.0	5.0	.80	2.0	3.2m	.40		5	C	A159	ML62c
35	AM9102AFM	1024	1	S	MNG	500n	500n	275m	0.0	5.0	.80	2.0	3.2m	.40		5	C	A159	FL33b
36	AM9102APC	1024	1	S	MNG	500n	250n	260m☑	0.0	5.0	.80	2.0	3.2m	.40		0	7	A159	ML89a
37	C2102-1	1024	1	S	MNG	500n	500n*	350m♦	0.0	5.0	.65	2.2	1.9m	.45		0	7	A118b	ML127k
38	P2102-1	1024	1	S	MNG	500n	500n*	350m♦	0.0	5.0	.65	2.2	1.9m	.45		0	7	A118b	ML89a
39	21L02-2F	1024	1	S	MNG	650n	650n*	200m	0.0	5.0	.65	2.2§	1.9m	.45		0	7	A118a	ML127r
40	21L02-2I	1024	1	S	MNG	650n	650n*	200m	0.0	5.0	.65	2.2§	1.9m	.45		0	7	A118a	ML107a
41	21L02-2N	1024	1	S	MNG	650n	650n*	200m	0.0	5.0	.65	2.2§	1.9m	.45		0	7	A118a	ML132
42	21L022DC	1024	1	S	MNG	650n	650n*	150m	0.0	5.0	.65	2.2§	2.1m	.40		0	7	A118	ML321
43	21L022FC	1024	1	S	MNG	650n	650n*	150m	0.0	5.0	.65	2.2§	2.1m	.40		0	7	A118	FL14j
44	21L022PC	1024	1	S	MNG	650n	650n*	150m	0.0	5.0	.65	2.2§	2.1m	.40		0	7	A118	ML170
45	2102-2DC	1024	1	S	MNG	650n	650n*	275m	0.0	5.0	.65	2.2§	2.1m	.40		0	7	A118	ML321
46	2102-2DL	1024	1	S	MNG	650n	650n*	350m	0.0	5.0	.65	2.2§	2.1m	.40		5	8	A118	ML321
47	2102-2DM	1024	1	S	MNG	650n	650n*	350m	0.0	5.0	.65	2.2§	2.1m	.40		5	C	A118	ML321
48	2102-2FC	1024	1	S	MNG	650n	650n*	275m	0.0	5.0	.65	2.2§	2.1m	.40		0	7	A118	FL14j
49	2102-2FL	1024	1	S	MNG	650n	650n*	350m	0.0	5.0	.65	2.2§	2.1m	.40		5	8	A118	FL14j
50	2102-2FM	1024	1	S	MNG	650n	650n*	350m	0.0	5.0	.65	2.2§	2.1m	.40		5	C	A118	FL14j
51	2102-2PC	1024	1	S	MNG	650n	650n*	275m	0.0	5.0	.65	2.2§	2.1m	.40		0	7	A118	ML170
52	2102L2DC	1024	1	S	MNG	650n	650n*	150m	0.0	5.0	.65	2.2§	2.1m	.40		0	7	A118	ML321
53	2102L2DL	1024	1	S	MNG	650n	650n*	200m	0.0	5.0	.65	2.2§	2.1m	.40		5	8	A118	ML321
54	2102L2DM	1024	1	S	MNG	650n	650n*	200m	0.0	5.0	.65	2.2§	2.1m	.40		5	C	A118	ML321
55	2102L2FC	1024	1	S	MNG	650n	650n*	150m	0.0	5.0	.65	2.2§	2.1m	.40		0	7	A118	FL14j
56	2102L2FL	1024	1	S	MNG	650n	650n*	200m	0.0	5.0	.65	2.2§	2.1m	.40		5	8	A118	FL14j
57	2102L2FM	1024	1	S	MNG	650n	650n*	200m	0.0	5.0	.65	2.2§	2.1m	.40		5	C	A118	FL14j
58	2102L2PC	1024	1	S	MNG	650n	650n*	150m	0.0	5.0	.65	2.2§	2.1m	.40		0	7	A118	ML170
59	AM91L02DC	1024	1	S	MNG	650n	650n*	175m	0.0	5.0	.80	2.0	3.2m	.40		0	7	A159	ML127k
60	AM91L02DM	1024	1	S	MNG	650n	650n*	175m	0.0	5.0	.80	2.0	3.2m	.40		5	C	A159	ML62c
61	AM91L02FM	1024	1	S	MNG	650n	650n*	175m	0.0	5.0	.80	2.0	3.2m	.40		5	C	A159	FL33b
62	AM91L02PC	1024	1	S	MNG	650n	650n*	175m	0.0	5.0	.80	2.0	3.2m	.40		0	7	A159	ML89a
63	AM9102DC	1024	1	S	MNG	650n	650n*	260m☑	0.0	5.0	.80	2.0	3.2m	.40		0	7	A159	ML127k
64	AM9102DM	1024	1	S	MNG	650n	650n*	260m☑	0.0	5.0	.80	2.0	3.2m	.40		5	C	A159	ML62c
65	AM9102FM	1024	1	S	MNG	650n	650n	275m	0.0	5.0	.80	2.0	3.2m	.40		5	C	A159	FL33b
66	AM9102PC	1024	1	S	MNG	650n	650n*	260m☑	0.0	5.0	.80	2.0	3.2m	.40		0	7	A159	ML89a
67	C2102-2	1024	1	S	MNG	650n	650n*	350m♦	0.0	5.0	.65	2.2	1.9m	.45		0	7	A118b	ML127k
68	C2102A6	1024	1	S	MNG	650n	650n*	289m	0.0	5.0	.65	2.2§	2.1m	.45		0	7	A118	ML358
69	D2102A6	1024	1	S	MNG	650n	650n*	289m	0.0	5.0	.65	2.2§	2.1m	.45		0	8	A118	ML127a
70#	M2102AB1-6	1024	1	S	MNG	650n	650n*	289m	0.0	5.0	.65	2.2	2.1m	.45		0	7	A380	ML301
71#	M2102AD1-6	1024	1	S	MNG	650n	650n*	289m	0.0	5.0	.65	2.2	2.1m	.45		0	7	A380	ML302
72#	M2102AF1-6	1024	1	S	MNG	650n	650n*	289m	0.0	5.0	.65	2.2	2.1m	.45		0	7	A380	ML300
73	MM2102AJ-6	1024	1	S	MNG	650n	650n*	289m	0.0	5.0	.80	2.0§	3.2m	.40		0	7	A118	ML280
74	MM2102AJ-6L	1024	1	S	MNG	650n	650n*	174m	0.0	5.0	.80	2.0§	3.2m	.40		0	7	A118	ML280
75	MM2102AN-6	1024	1	S	MNG	650n	650n*	289m	0.0	5.0	.80	2.0§	3.2m	.40		0	7	A118	ML178
76	MM2102AN-6L	1024	1	S	MNG	650n	650n*	174m	0.0	5.0	.80	2.0§	3.2m	.40		0	7	A118	ML178
77	P2102-2	1024	1	S	MNG	650n	650n*	350m♦	0.0	5.0	.65	2.2	1.9m	.45		0	7	A118b	ML89a
78	P2102A6	1024	1	S	MNG	650n	650n*	289m	0.0	5.0	.65	2.2§	2.1m	.45		0	8	A118	ML361
79	21L02-1N	1024	1	S	MNG	1.0u	1.0u*	200m	0.0	5.0	.65	2.2§	1.9m	.45		0	7	A118a	ML132
80	21L02F	1024	1	S	MNG	1.0u	1.0u*	200m	0.0	5.0	.65	2.2§	1.9m	.45		0	7	A118a	ML127r
81	21L02I	1024	1	S	MNG	1.0u	1.0u*	200m	0.0	5.0	.65	2.2§	1.9m	.45		0	7	A118a	ML107a
82	21L02N	1024	1	S	MNG	1.0u	1.0u*	200m	0.0	5.0	.65	2.2§	1.9m	.45		0	7	A118a	ML132
83	C2102	1024	1	S	MNG	1.0u	1.0u*	350m♦	0.0	5.0	.65	2.2	1.9m	.45		0	7	A118b	ML127k
84#	M330AB1	1024	1	S	MNG	1.0u	1.0u*	150m†	0.0	5.0	.65	2.2	1.9m	.45		0	7	A118b	ML60
85	P2102	1024	1	S	MNG	1.0u	1.0u*	350m♦	0.0	5.0	.65	2.2	1.9m	.45		0	7	A118	ML4j
86#	2102DC	1024	1	S	MNX			250m	0.0	5.0	0.65	2.2				0	7	A118	
87#	uPD2102ALC-2	1024	1	S	MNX	250n	250n*	367m	0.0	5.0	.80	2.0§	2.1m	.40		1	7	A380	ML349
88#	uPD2102ALC	1024	1	S	MNX	350n	350n*	367m	0.0	5.0	.80	2.0§	2.1m	.40		1	7	A380	ML349
89#	uPD2102ALC-4	1024	1	S	MNX	450n	450n*	367m	0.0	5.0	.80	2.0§	2.1m	.40		1	7	A380	ML349
90#	MSM3750-6A	1024	1	S	MNX	650n	650n*	350m	0.0	5.0	.65	2.2§	1.6m	.45		2	7	A350	ML☑
91#	MSM3750-8A	1024	1	S	MNX	850n	850n*	350m	0.0	5.0	.65	2.2§	1.6m	.45		2	7	A350	ML☑
92♦#	uPD444C	1024	4		MCG	450n	450n*	5.0ut♦	0.0	5.0	.80	2.4	1uΔ	.40		4	8	A518	ML368
93	IM7114L2CJN	1024	4	S		200n	200n*	265m	0.0	5.0	.80	2.0	3.2m	.40		0	7	A268	ML134h
94	MD2114L2	1024	4	S		200n	200n*	385m	0.0	5.0	.80	2.0	3.2m	.40		5	C	A268	ML134h
95	IM7114L3CJN	1024	4	S		300n	300n*	265m	0.0	5.0	.80	2.0	3.2m	.40		0	7	A268	ML134h
96	MD2114L3	1024	4	S		300n	300n*	385m	0.0	5.0	.80	2.0	3.2m	.40		5	C	A268	ML134h
97	D2142L	1024	4	S		450n	450n*	370m	0.0	5.0	.80	2.0§	2.1	.40		0	7	A366	ML359b
98	IM7114CPN	1024	4	S		450n	450n*	265m	0.0	5.0	.80	2.0	3.2m	.40		0	7	A268	ML165d
99	IM7114LCJN	1024	4	S		450n	450n*	265m	0.0	5.0	.80	2.0	3.2m	.40		0	7	A268	ML134h
100	MD2114L	1024	4	S		450n	450n*	385m	0.0	5.0	.80	2.0	3.2m	.40		5	C	A268	ML134h
101▼	P2142L	1024	4	S		450n	450n*	370m	0.0	5.0	.80	2.0§	2.1	.40		0	7	A366	ML361d
102▼	MBM10474	1024	4	S	BEX	25n	15n$	0.2m%	5.2	0.0	-1.8	-.81	-30m☑			0	7	PN24ig	ML448
103	HM6514-2	1024	4	S	MCG			35m	0.0	5.0	.80	3.0				5	C	A372	
104	HM6514-5	1024	4	S	MCG			35m	0.0	5.0	.80	3.0				0	7	A372	
105	HM6514-9	1024	4	S	MCG			35m	0.0	5.0	.80	3.0				4	8		
106	HM6514B2	1024	4	S	MCG			35m	0.0	5.0	.80	3.0				5	C	A372	
107	HM6514B9	1024	4	S	MCG			35m	0.0	5.0	.80	3.0				4	8	A372	
108	HM6533-2	1024	4	S	MCG			35m	0.0	5.0	.80	3.0				5	C	A406	
109	HM6533-9	1024	4	S	MCG			35m	0.0	5.0	.80	3.0				4	8	A406	
110	HM6533C9	1024	4	S	MCG			35m	0.0	5.0	.80	3.0				4	8	A406	

SYMBOLS AND CODES EXPLAINED IN INTERPRETER

2. READ-WRITE MEMORIES (RAMS)

IN ORDER OF (1)No.WORDS(2)No.BITS/WORD (3)MODE(4)STRUCT.(5)MAX ACC.TIME(6)TYPE No.

LINE No.	6 TYPE No.	ORGANIZATION 1 No. WORDS	2 BITS PER WORD	3 MODE	4 STRUCTURE CODE	5 MAX ACCESS TIME (s)	MAX WRITE CYCLE TIME (s)	MAX OPER. POWER DISS. (W)	RATED POWER SUP. SPAN NEG. (V)	POS. (V)	INPUT LOGIC LEVELS MAX '0' (V)	MIN '1' (V)	MIN OUTPUT SINK CURRENT (A)	@ OUT (V)	MIN CLOCK FREQ. (Hz)	OPER. TEMP. RANGE CODE -	+	DRAWINGS LOGIC/ BLOCK	OUTLINE
1▼#	HM6148LP-3	1024	4	S	MCG	55n	55n	150n	0.0	5.0	.80	2.4				0	7	A268	ML165e
2#	HM6148P-3	1024	4	S	MCG	55n	55n	150m	0.0	5.0	.80	2.4				0	7	A268	ML165e
3#	HM6148P	1024	4	S	MCG	70n	70n	150m	0.0	5.0	.80	2.4				0	7	A268	ML165e
4	IM6514CJN	1024	4	S	MCG☑	170n†		1.0ut♦	0.0	5.0						0	7	A372	ML398
5	IM6514CPN	1024	4	S	MCG☑	170n†		1.0ut♦	0.0	5.0						0	7	A372	ML402
6	IM6514IDN	1024	4	S	MCG☑	170n†		1.0ut♦	0.0	5.0						4	8	A372	ML397
7	IM6514IJN	1024	4	S	MCG☑	170n†		1.0ut♦	0.0	5.0						4	8	A372	ML398
8	IM6514IPN	1024	4	S	MCG☑	170n†		1.0ut♦	0.0	5.0						4	8	A372	ML402
9	IM6514MDN	1024	4	S	MCG☑	170n†		1.0ut♦	0.0	5.0						5	C	A372	ML397
10	IM6514MFN	1024	4	S	MCG☑	170n†		1.0ut♦	0.0	5.0						5	C	A372	FL77
11	IM6514MJN	1024	4	S	MCG☑	170n†		1.0ut♦	0.0	5.0						5	C	A372	ML398
12▼	TC5514AD-2	1024	4	S	MCG	200n	200n	49m	0.0	5.0	.80	2.0	2.0m	.40		3	8	A543	ML344
13▼	TC5514ADL-2	1024	4	S	MCG	200n	200n	49m	0.0	5.0	.80	2.0	2.0m	.40		3	8	A543	ML344
14▼	TC5514AP-2	1024	4	S	MCG	200n	200n	49m	0.0	5.0	.80	2.0	2.0m	.40		3	8	A543	ML165c
15▼	TC5514APL-2	1024	4	S	MCG	200n	200n	49m	0.0	5.0	.80	2.0	2.0m	.40		3	8	A543	ML165c
16#	uPD444C-1	1024	4	S	MCG	200n	200n*	5.0ut♦	0.0	5.0	0.8	2.4§	1u△			4	8	A518	ML368
17▼	MB8414E	1024	4	S	MCG	250n	370n*	275u♦	0.0	5.0	0.8	2.2§	1.0u△			4	8	PN18o	ML347
18	NMC6514J-2	1024	4	S	MCG	300n	420n	250u♦	0.0	5.0	.80	3.0§	3.2m	.40		5	C	A476	ML194e
19	NMC6514J-9	1024	4	S	MCG	300n	420n	250u♦	0.0	5.0	.80	3.0§	3.2m	.40		4	8	A476	ML194e
20	NMC6514N-9	1024	4	S	MCG	300n	420n	250u♦	0.0	5.0	.80	3.0§	3.2m	.40		4	8	A476	ML196
21	SCM5114-1	1024	4	S	MCG	300n	300n	50mØ†	0.0	5.0	0.8	2.0§	1.0u△			5	C	PN18o	
22	SCM5114-3	1024	4	S	MCG	300n	300n	50mØ†	0.0	5.0	0.8	2.0§	1.0u△			0	7	PN18o	
23▼	TC5514AD-3	1024	4	S	MCG	300n	300n	49m	0.0	5.0	.80	2.0	2.0m	.40		3	8	A543	ML344
24▼	TC5514ADL-3	1024	4	S	MCG	300n	200n	49m	0.0	5.0	.80	2.0	2.0m	.40		3	8	A543	ML344
25▼	TC5514AP-3	1024	4	S	MCG	300n	300n	49m	0.0	5.0	.80	2.0	2.0m	.40		3	8	A543	ML165c
26▼	TC5514APL-3	1024	4	S	MCG	300n	300n	49m	0.0	5.0	.80	2.0	2.0m	.40		3	8	A543	ML165c
27#	uPD444C-3	1024	4	S	MCG	300n	300n*	5.0ut♦	0.0	5.0	0.8	2.4§	1u△			4	8	A518	ML368
28	NMC6514J-5	1024	4	S	MCG	350n	500n	2.5m	0.0	5.0	.80	3.0§	3.2m	.40		0	7	A476	ML194e
29	NMC6514N-5	1024	4	S	MCG	350n	580n	2.5m	0.0	5.0	.80	3.0§	3.2m	.40		0	7	A476	ML196
30#	M58981P	1024	4	S	MCG	450n	450n	220m	0.0	5.0	.65	2.2§	2.0m	.40		0	7	A268	ML115
31#	M58981S-45	1024	4	S	MCG	450n	450n	150m	0.0	5.0	.65	2.2§	2.0m	.40		0	7	A268	ML115
32	SCM5114-5	1024	4	S	MCG	450n	450n	50mØ†	0.0	5.0	0.8	2.0§	1.0u△			0	7	PN18o	
33	SCM5114-8	1024	4	S	MCG	450n	450n	50mØ†	0.0	5.0	0.8	2.0§	1.0u△			0	7	PN18o	
34	TC5514P	1024	4	S	MCG	450n	450n*	138m	0.0	5.0	0.65	2.2	2.0m	0.4		3	8	A521	ML3j
35▼	TC5514PL	1024	4	S	MCG	450n	450n	138m	0.0	5.0	.65	2.2	2.0m	.40		3	8		ML165c
36	TC5047AP-1	1024	4	S	MCG	550n	650n*	110m	0.0	5.0	0.6	3.0	1.6m	.40		3	8		ML365
37▼	TC5047APL-1	1024	4	S	MCG	550n	650n	110m	0.0	5.0	.60	3.0	1.6m	.40		3	8	A540	ML365
38	MWS5114D	1024	4	S	MCG	650n	500n*	250u♦	0.0	5.0	.80	2.4§	2.0m	.40		5	C	A377	ML292
39	MWS5114E	1024	4	S	MCG	650n	500n*	250u♦	0.0	5.0	.80	2.4§	2.0m	.40		4	8	A377	ML293
40♦	TC5514P-1	1024	4	S	MCG	650n	650n*	110m	0.0	5.0	0.65	2.2	2.0m	0.4		3	8		ML165c
41▼	TC5514PL-1	1024	4	S	MCG	650n	650n	110m	0.0	5.0	.65	2.2	2.0m	.40		3	8		ML165c
42♦	TC5047AP-2	1024	4	S	MCG	800n	1.0u*	110m	0.0	5.0	0.6	3.0	1.6m	.40		3	8	A540	ML365
43▼	TC5047APL-2	1024	4	S	MCG	800n	1.0u	110m	0.0	5.0	.60	3.0	1.6m	.40		3	8	A540	ML365
44	TC5514P-2	1024	4	S	MCG	800n	800n*	110m	0.0	5.0	0.65	2.2	2.0m	0.4		3	8	A521	ML3j
45▼	TC5514PL-2	1024	4	S	MCG	800n	800n	110m	0.0	5.0	.80	2.0	2.0m	.40		3	8		ML165c
46	CDP1825CD	1024	4	S	MCS	650n	400n†		5	7	0.8	2.4§	2.0m	0.4		5	C	A268	ML292
47	CDP1825CE	1024	4	S	MCS	650n	400n†		5	7	0.8	2.4§	2.0m	0.4		4	8	A268	ML295
48	CDP1825D	1024	4	S	MCS	650n	400n†		5	11	0.8	2.4§	2.0m	0.4		5	C	A268	ML292
49	CDP1825E	1024	4	S	MCS	650n	400n†		5	11	0.8	2.4§	2.0m	0.4		4	8	A268	ML295
50	MCM146514L	1024	4	S	MCX				0.0	5.0						0	7	A394	ML264
51	MCM146514P	1024	4	S	MCX				0.0	5.0						0	7	A394	ML265
52#	HM6148LP	1024	4	S	MCX	70n	70n*	1.0 ☑	0.0	5.0	.80	2.0§	2.0u△	5.5		0	7	A325	ML165e
53#	HM6148LP-6	1024	4	S	MCX	85n	85n*	1.0 ☑	0.0	5.0	.80	2.0§	2.0u△	5.5		0	7	A325	ML165e
54▼#	HM6148P-6	1024	4	S	MCX	85n	85n*	1.0	0.0	5.0	.80	2.4	8.0m	.40		0	7	PN18O	
55	MD21SC14AE10	1024	4	S	MCX	100n	100n*		0.0	5.0	.80	2.0§	10u△			0	7	A268	ML131
56	MD21SC14AE15	1024	4	S	MCX	150n	150n*		0.0	5.0	.80	2.0§	10u△			0	7	A268	ML131
57	MD21SC14AE25	1024	4	S	MCX	250n	250n*		0.0	5.0	.80	2.0§	10u△			0	7	A268	ML131
58	S6514	1024	4	S	MCX	300n$	420n*	1.0m♦	0.0	5.0	0.8	2.4§	1.0u△	5.0♦		0	7	A372	
59#	uPD445LC-1	1024	4	S	MCX	450n	450n*	150m	0.0	5.0	.65	2.2	2.0m	.40		1	7	A448	ML365
60#	uPD445LC	1024	4	S	MCX	650n	650n*	150m	0.0	5.0	.65	2.2	2.0m	.40		1	7	A448	ML365
61	MM1-RAM	1024	4	S	MNG			1.5	0.0	5.0	.80	2.0							
62♦	TMM314APL-1	1024	4	S	MNG		200n*△	850m	0.0	5.0	0.8	2.0				0	7		ML165c
63▼	D2149H2	1024	4	S	MNG	45n	45n*	1.2 ☑	0.0	5.0	.80	2.1§	10u△	5.0		0	7	A488	ML359a
64▼	MBM2149-45	1024	4	S	MNG	45n	455n*	900m	0.0	5.0	0.8	2.1§	50u#△			0	7	PN18o	ML447
65▼	D2148H3	1024	4	S	MNG	55n	55n*	1.2 ☑	0.0	5.0	.80	2.1§	50u△	4.5		0	7	A488	ML359a
66▼	D2148HL3	1024	4	S	MNG	55n	55n*	1.2 ☑	0.0	5.0	.80	2.1§	50u△	4.5		0	7	A488	ML359a
67▼	D2149H3	1024	4	S	MNG	55n	55n*	1.2 ☑	0.0	5.0	.80	2.1§	10u△	5.0		0	7	A488	ML359a
68▼	D2149HL3	1024	4	S	MNG	55n	55n*	1.2 ☑	0.0	5.0	.80	2.1§	10u△	5.0		0	7	A488	ML359a
69▼	MBM2148-55L	1024	4	S	MNG	55n	55n*	1.2	0.0	5.0	0.8	2.1§	50u#△			0	7	PN18o	ML447
70▼	MBM2149-55	1024	4	S	MNG	55n	55n*	900m	0.0	5.0	0.8	2.1§	50u#△			0	7	PN18o	ML447
71▼	MBM2149-55L	1024	4	S	MNG	55n	55n*	625m	0.0	5.0	0.8	2.1§	50u#△			0	7	PN18o	ML447
72	D2148H	1024	4	S	MNG	70n	70n*	1.2 ☑	0.0	5.0	.80	2.1§	50u△	4.5		0	7	A488	ML359a
73	D2148HL	1024	4	S	MNG	70n	70n*	1.2 ☑	0.0	5.0	.80	2.1§	50u△	4.5		0	7	A488	ML359a
74	D2149H	1024	4	S	MNG	70n	70n*	1.2 ☑	0.0	5.0	.80	2.1§	10u△	5.0		0	7	A488	ML359a
75	D2149HL	1024	4	S	MNG	70n	70n*	1.2 ☑	0.0	5.0	.80	2.1§	10u△	5.0		0	7	A488	ML359a
76▼	MBM2148-70L	1024	4	S	MNG	70n	70n*	1.2	0.0	5.0	0.8	2.1§	50u#△			0	7	PN18o	ML447
77▼	MBM2149-70	1024	4	S	MNG	70n	70n*	900m	0.0	5.0	0.8	2.1§	50u#△			0	7	PN18o	ML447
78▼	MBM2149-70L	1024	4	S	MNG	70n	70n*	625m	0.0	5.0	0.8	2.1§	50u#△			0	7	PN18o	ML447
79	MD2148H	1024	4	S	MNG	70n	70n*	1.2 ☑	0.0	5.0	.80	2.1§	50u△	4.5		5	C	A488	ML359a
80▼	P2114AL1	1024	4	S	MNG	100n	100n*	1.0 ☑	0.0	5.0	.80	2.0§	2.1m	.40		0	7	A268	ML361a
81▼	D2114AL2	1024	4	S	MNG	120n	120n*	1.0 ☑	0.0	5.0	.80	2.0§	2.1m	.40		0	7		ML359a
82	NMC2114AJ	1024	4	S	MNG	120n	120n*	1.2 ☑	0.0	5.0	.80	2.0§	8.0m	.40		0	7	A268	ML☑
83	NMC2114AN	1024	4	S	MNG	120n	120n*	1.2 ☑	0.0	5.0	.80	2.0§	8.0m	.40		0	7	A268	ML☑
84	NMC2114APJ	1024	4	S	MNG	120n	120n*	1.2 ☑	0.0	5.0	.80	2.0§	8.0m	.40		0	7	A268	ML☑
85	NMC2114APN	1024	4	S	MNG	120n	120n*	1.2 ☑	0.0	5.0	.80	2.0§	8.0m	.40		0	7	A268	ML☑
86	NMC2142AJ	1024	4	S	MNG	120n	120n*	1.2 ☑	0.0	5.0	.80	2.0§	8.0m	.40		0	7	A366	
87	NMC2142AN	1024	4	S	MNG	120n	120n*	1.2 ☑	0.0	5.0	.80	2.0§	8.0m	.40		0	7	A366	ML☑
88	NMC2142APJ	1024	4	S	MNG	120n	120n*	1.2 ☑	0.0	5.0	.80	2.0§	8.0m	.40		0	7	A366	ML☑
89	NMC2142APN	1024	4	S	MNG	120n	120n*	1.2 ☑	0.0	5.0	.80	2.0§	8.0m	.40		0	7	A366	ML☑
90▼	P2114AL2	1024	4	S	MNG	120n	120n*	1.0 ☑	0.0	5.0	.80	2.0§	2.1m	.40		0	7	A268	ML361a
91	TMS4245JL	1024	4	S	MNG	120n	120n*	350mt	0.0	5.0	.80	2.0				0	7	PN18j	ML3b
92	TMS4245NL	1024	4	S	MNG	120n	120n*	350mt	0.0	5.0	.80	2.0				0	7	PN18j	ML3k
93	AM9404FDC	1024	4	S	MNG	150nØ		1.3 ☑	0.0	5.0	.80	2.4	3.2m	.40		0	7	A487	ML147
94▼	D2114AL3	1024	4	S	MNG	150n	150n*	1.0 ☑	0.0	5.0	.80	2.0§	2.1m	.40		0	7		ML359a
95	EA2114L-15PC	1024	4	S	MNG	150n	150n	1.0	0.5 #	7.0 #	0.8	2.0				1	7	A268	ML165
96▼#	HM472114A-1	1024	4	S	MNG	150n	150n*	1.0 ☑	0.0	5.0	.80	2.0§	10u△	.40		0	7	A485	ML304
97▼#	HM472114AP-1	1024	4	S	MNG	150n	150n*	1.0 ☑	0.0	5.0	.80	2.0§	10u△	.40		0	7	A485	ML165e
98▼	P2114AL3	1024	4	S	MNG	150n	150n*	1.0 ☑	0.0	5.0	.80	2.0§	2.1m	.40		0	7	A268	ML361a
99	TMS2114-15NL	1024	4	S	MNG	150n	150n	550m	0.0	5.0	.80	2.0§	3.2m	.40		0	7	A339	ML3K
100	TMS2114L-15NL	1024	4	S	MNG	150n	150n	330m	0.0	5.0	.80	2.0§	3.2m	.40		0	7	A339	ML3k
101#	uPD2114LC-5	1024	4	S	MNG	150n	150n*	357m	0.0	5.0	.80	2.0	3.2m	.40		1	8	A268	ML368
102#	uPD2114LD-5	1024	4	S	MNG	150n	150n*	357m	0.0	5.0	.80	2.0	3.2m	.40		1	8	A268	ML226c
103	Z6114-2CS	1024	4	S	MNG	150n	240n*		0.0	5.0	-.30*	2.0				0	7	A527a	ML327
104	Z6114-2PS	1024	4	S	MNG	150n	240n*		0.0	5.0	-.30*	2.0				0	7	A527a	ML327
105	Z6142-2CS	1024	4	S	MNG	150n	240n*		0.0	5.0	-.30*	2.0				0	7	A527	
106♦	Z6142-2PS	1024	4	S	MNG	150n	240n*		0.0	5.0	-.30*	2.0				0	7	A527	
107	2114-2CA	1024	4	S	MNG	200n	200n*	500m	0.0	5.0	.80	2.0§	2.1m	.40		0	7	A377	ML3j
108	2114-2CB	1024	4	S	MNG	200n	200n*	500m	0.0	5.0	.80	2.0§	2.1m	.40		0	7	A377	ML226a
109	2114-2CE	1024	4	S	MNG	200n	200n*	525m	0.0	5.0	.80	2.0§	2.1m	.40		0	7	A377	ML226
110	2142-2	1024	4	S	MNG	200n	200n*	525m	0.0	5.0	0.8	2.0§	10u△	4.5		0	7	A366	

SYMBOLS AND CODES EXPLAINED IN INTERPRETER

2. READ-WRITE MEMORIES (RAMS)

IN ORDER OF (1)No.WORDS(2)No.BITS/WORD (3)MODE(4)STRUCT.(5)MAX ACC.TIME(6)TYPE No.

LINE No.	6 TYPE No.	ORGANIZATION 1 No. WORDS	2 BITS PER WORD	3 MODE	4 STRUCTURE CODE	5 MAX ACCESS TIME (s)	MAX WRITE CYCLE TIME (s)	MAX OPER. POWER DISS. (W)	RATED POWER SUP. SPAN NEG. (V)	POS. (V)	INPUT LOGIC LEVELS MAX '0' (V)	MIN '1' (V)	MIN OUTPUT SINK CURRENT (A)	@ OUT (V)	MIN CLOCK FREQ. (Hz)	OPER. TEMP. RANGE CODE -	+	DRAWINGS LOGIC/ BLOCK	OUTLINE
1	C2142-2	1024	4	S	MNG	200n	200n*	475m	0.0	5.0	.80	2.0§	2.1m	.40		0	7	A366	ML360a
2	C2142L-2	1024	4	S	MNG	200n	200n*	325m	0.0	5.0	.80	2.0§	2.1m	.40		0	7	A366	ML360a
3	D2114-2	1024	4	S	MNG	200n	200n*	525m	0.0	5.0	.80	2.0§	2.1m	.40		1	8	A268	ML359a
4▼	D2114A4	1024	4	S	MNG	200n	200n*	1.0 ☑	0.0	5.0	.80	2.0§	2.1m	.40		0	7		ML359a
5▼	D2114AL4	1024	4	S	MNG	200n	200n*	1.0 ☑	0.0	5.0	.80	2.0§	2.1m	.40		0	7		ML359a
6	D2114L2	1024	4	S	MNG	200n	200n*	370m	0.0	5.0	.80	2.0§	2.1m	.40		1	8	A268	ML359a
7	D2142-2	1024	4	S	MNG	200n	200n*	525m	0.0	5.0	.80	2.0§	2.1	.40		0	7	A366	ML359b
8	EA2114L-20PC	1024	4	S	MNG	200n	200n	1.0	0.5 #	7.0 #	0.8	2.0				1	7	A268	ML165
9	F2114-2DC	1024	4	S	MNG	200n	200n*	500m	0.0	5.0	.80	2.0§	3.2m	.40		0	7	A268	ML327
10	F2114-2PC	1024	4	S	MNG	200n	200n*	500m	0.0	5.0	.80	2.0§	3.2m	.40		0	7	A268	ML3h
11	F2114L2DC	1024	4	S	MNG	200n	200n*	250m	0.0	5.0	.80	2.0§	3.2m	.40		0	7	A268	ML327
12	F2114L2PC	1024	4	S	MNG	200n	200n*	250m	0.0	5.0	.80	2.0§	3.2m	.40		0	7	A268	ML3h
13	L2114-2CA	1024	4	S	MNG	200n	200n*	368m	0.0	5.0	.80	2.0§	2.1m	.40		0	7	A377	ML3j
14	L2114-2CB	1024	4	S	MNG	200n	200n*	368m	0.0	5.0	.80	2.0§	2.1m	.40		0	7	A377	ML226a
15	L2114-2CE	1024	4	S	MNG	200n	200n*	368m	0.0	5.0	.80	2.0§	2.1m	.40		0	7	A377	ML226
16#	M5L2114LP-2	1024	4	S	MNG	200n	200n	358m	0.0	5.0	.80	2.0	2.1m	.40		0	7	A268	ML338
17#	M5L2114LS-2	1024	4	S	MNG	200n	200n	358m	0.0	5.0	.80	2.0	2.1m	.40		0	7	A268	ML337
18	MCM21L14-20L	1024	4	S	MNG	200n		325m	0.0	5.0	.80	2.0§	2.1m	.40		0	7	A377	ML370
19	MCM21L14-20P	1024	4	S	MNG	200n		325m	0.0	5.0	.80	2.0§	2.1m	.40		0	7	A377	ML265
20	MCM21L14C20	1024	4	S	MNG	200n	200n*	350m	0.0	5.0	.80	2.0§	2.1m	.40		0	7	A268	ML271
21	MCM21L14P20	1024	4	S	MNG	200n	200n*	350m	0.0	5.0	.80	2.0§	2.1m	.40		0	7	A268	ML265
22	MCM2114-20L	1024	4	S	MNG	200n	200n*	500m	0.0	5.0	.80	2.0§	2.1m	.40		0	7	A377	ML370
23	MCM2114-20P	1024	4	S	MNG	200n	200n*	500m	0.0	5.0	.80	2.0§	2.1m	.40		0	7	A377	ML265
24	MCM2114C20	1024	4	S	MNG	200n	200n*	500m	0.0	5.0	.80	2.0§	2.1m	.40		0	7	A268	ML271
25	MCM2114P20	1024	4	S	MNG	200n	200n*	500m	0.0	5.0	.80	2.0§	2.1m	.40		0	7	A268	ML265
26▼	MD2114A4	1024	4	S	MNG	200n	200n*	1.0 ☑	0.0	5.0	.80	2.0§	2.1m	.40		5	C	A268	ML359a
27▼	MD2114L4	1024	4	S	MNG	200n	200n*	1.0 ☑	0.0	5.0	.80	2.0§	2.1m	.40		5	C	A268	ML359a
28	MM2114J-2	1024	4	S	MNG	200n	200n	475mØ	0.0	5.0	.80	2.0	2.1m	.40		0	7	A268	ML194e
29	MM2114J-2L	1024	4	S	MNG	200n	200n	475mØ	0.0	5.0	.80	2.0	2.1m	.40		0	7	A268	ML194e
30	MM2114N-2	1024	4	S	MNG	200n	200n	475mØ	0.0	5.0	.80	2.0	2.1m	.40		0	7	A268	ML196
31	MM2114N-2L	1024	4	S	MNG	200n	200n	475mØ	0.0	5.0	.80	2.0	2.1m	.40		0	7	A268	ML196
32#	MSM2114-2RS	1024	4	S	MNG	200n	200n*	1.0	0.0	7.0	.80	2.0	2.0m	.40		0	7	A268	ML☑
33#	MSM2114L-2	1024	4	S	MNG	200n	200n*	370m	0.0	5.0	.80	2.0	10u△	5.5		0	7	A485	ML165g
34#	MSM5114-2AS	1024	4	S	MNG	200n	200n*	200u♦	0.0	5.0	.80	2.4	1.0u△	5.0		0	7	A485	ML240
35#	MSM5114-2RS	1024	4	S	MNG	200n	200n*	200u♦	0.0	5.0	.80	2.4	1.0u△	5.0		0	7	A485	ML165g
36	P2114-2	1024	4	S	MNG	200n	200n*	525m	0.0	5.0	.80	2.0§	2.1m	.40		0	7	A268	ML361a
37▼	P2114A4	1024	4	S	MNG	200n	200n*	1.0 ☑	0.0	5.0	.80	2.0§	2.1m	.40		0	7	A268	ML361a
38▼	P2114AL4	1024	4	S	MNG	200n	200n*	1.0 ☑	0.0	5.0	.80	2.0§	2.1m	.40		0	7	A268	ML361a
39	P2114L2	1024	4	S	MNG	200n	200n*	370m	0.0	5.0	.80	2.0§	2.1m	.40		0	7	A268	ML361a
40▼	P2142-2	1024	4	S	MNG	200n	200n*	525m	0.0	5.0	.80	2.0§	2.1	.40		0	7	A366	ML361d
41#	SFF821L14E-20	1024	4	S	MNG	200n	200n*	370m	0.0	5.0	0.8	2.0§	2.1m	0.4		0	7	A268	
42#	SFF82114E-20	1024	4	S	MNG	200n	200n*	525m	0.0	5.0	0.8	2.0§	2.1m	0.4		0	7	A268	
43#	SFF82114J-20	1024	4	S	MNG	200n	200n*	525m	0.0	5.0	0.8	2.0§	2.1m	0.4		0	7	A268	
44	SYC2142-2	1024	4	S	MNG☑	200n	200n*	500m	0.0	5.0	.80	2.0				0	7	A366a	ML392
45	SYC2142L-2	1024	4	S	MNG☑	200n	200n*	350m	0.0	5.0	.80	2.0				0	7	A366a	ML392
46	SYC2142LV-2	1024	4	S	MNG☑	200n	200n*	350m	0.0	5.0	.80	2.0				0	7	A366a	ML392
47	SYP2142-2	1024	4	S	MNG☑	200n	200n*	500m	0.0	5.0	.80	2.0				0	7	A366a	ML391
48	SYP2142L-2	1024	4	S	MNG☑	200n	200n*	350m	0.0	5.0	.45	2.0				0	7	A366a	ML391
49	SYP2142LV-2	1024	4	S	MNG☑	200n	200n*	350m	0.0	5.0	.80	2.0				0	7	A366a	ML391
50♦	TMM314AP-1	1024	4	S	MNG	200n	200n*	550m	0.0	5.0	0.8	2.0	2.1m	.40		0	7	A485	ML165c
51♦	TMM314APL-3	1024	4	S	MNG	200n	200n	385	0.0	5.0	0.8	2.0	2.1m	.40		0	7	A485	ML165c
52	TMS40L45-20NL	1024	4	S	MNG	200n	200n*	330m	0.0	5.0	.80	2.0§	3.2m	.40		0	7	A339	ML3K
53	TMS2114-20NL	1024	4	S	MNG	200n	200n	550m	0.0	5.0	.80	2.0§	3.2m	.40		0	7	A339	ML3K
54	TMS2114L-20NL	1024	4	S	MNG	200n	200n	330m	0.0	5.0	.80	2.0§	3.2m	.40		0	7	A339	ML3K
55	uPD444C#	1024	4	S	MNG	200n	200n*		0.0	5.0	.80	2.4§	1.0u△			4	8	A485	ML368
56#	uPD2114LC-3	1024	4	S	MNG	200n	200n*	357m	0.0	5.0	.80	2.0	3.2m	.40		1	8	A268	ML368
57#	uPD2114LD-3	1024	4	S	MNG	200n	200n*	357m	0.0	5.0	.80	2.0	3.2m	.40		1	8	A268	ML226c
58	uPD6514C	1024	4	S	MNG	200n	200n*		0.0	5.0	.80	2.4§	1.0u△			4	8	A485	ML368
59	Z6114-3CS	1024	4	S	MNG	200n	320n*		0.0	5.0	-.30*	2.0				0	7	A527a	ML327
60♦	Z6114-3PS	1024	4	S	MNG	200n	320n*		0.0	5.0	-.30*	2.0				0	7	A527a	ML327
61	Z6142-3CS	1024	4	S	MNG	200n	320n*		0.0	5.0	-.30*	2.0				0	7	A527	
62	Z6142-3PS	1024	4	S	MNG	200n	320n*		0.0	5.0	-.30*	2.0				0	7	A527	
63	AM9404DDC	1024	4	S	MNG	250nØ		1.3 ☑	0.0	5.0	.80	2.4	3.2m	.40		0	7	A487	ML147
64	AM9404DDM	1024	4	S	MNG	250nØ		1.3 ☑	0.0	5.0	.80	2.4	3.2m	.40		5	C	A487	ML147
65▼	D2114A5	1024	4	S	MNG	250n	250n*	1.0 ☑	0.0	5.0	.80	2.0§	2.1m	.40		0	7		ML359a
66	EA2114L-25PC	1024	4	S	MNG	250n	250n	1.0	0.5 #	7.0 #	0.8	2.0				1	7	A268	ML165
67	MCM21L14-25L	1024	4	S	MNG	250n		325m	0.0	5.0	.80	2.0§	2.1m	.40		0	7	A377	ML370
68	MCM21L14-25P	1024	4	S	MNG	250n		325m	0.0	5.0	.80	2.0§	2.1m	.40		0	7	A377	ML265
69	MCM21L14C25	1024	4	S	MNG	250n	250n*	350m	0.0	5.0	.80	2.0§	2.1m	.40		0	7	A268	ML271
70	MCM21L14P25	1024	4	S	MNG	250n	250n*	350m	0.0	5.0	.80	2.0§	2.1m	.40		0	7	A268	ML265
71	MCM2114-25L	1024	4	S	MNG	250n	250n*	500m	0.0	5.0	.80	2.0§	2.1m	.40		0	7	A377	ML370
72	MCM2114-25P	1024	4	S	MNG	250n	250n*	500m	0.0	5.0	.80	2.0§	2.1m	.40		0	7	A377	ML265
73	MCM2114C25	1024	4	S	MNG	250n	250n*	500m	0.0	5.0	.80	2.0§	2.1m	.40		0	7	A268	ML271
74	MCM2114P25	1024	4	S	MNG	250n	250n*	500m	0.0	5.0	.80	2.0§	2.1m	.40		0	7	A268	ML265
75▼	MD2114A5	1024	4	S	MNG	250n	250n*	1.0 ☑	0.0	5.0	.80	2.0§	2.1m	.40		5	C	A268	ML359a
76▼	MD2114L5	1024	4	S	MNG	250n	250n*	1.0 ☑	0.0	5.0	.80	2.0§	2.1m	.40		5	C	A268	ML359aA
77▼	P2114A5	1024	4	S	MNG	250n	250n*	1.0 ☑	0.0	5.0	.80	2.0§	2.1m	.40		0	7	A268	ML361a
78#	SFF821L14E-25	1024	4	S	MNG	250n	250n*	370m	0.0	5.0	0.8	2.0§	2.1m	0.4		0	7	A268	
79#	SFF821L14J-25	1024	4	S	MNG	250n	250n*	370m	0.0	5.0	0.8	2.0§	2.1m	0.4		0	7	A268	
80#	SFF82114E-25	1024	4	S	MNG	250n	250n*	525m	0.0	5.0	0.8	2.0§	2.1m	0.4		0	7	A268	
81#	SFF82114J-25	1024	4	S	MNG	250n	250n*	525m	0.0	5.0	0.8	2.0§	2.1m	0.4		0	7	A268	
82	TMS40L45-25NL	1024	4	S	MNG	250n	250n*	330m	0.0	5.0	.80	2.0§	3.2m	.40		0	7	A339	ML3k
83	TMS2114-25NL	1024	4	S	MNG	250n	250n	550m	0.0	5.0	.80	2.0§	3.2m	.40		0	7	A339	ML3K
84	TMS2114L-25NL	1024	4	S	MNG	250n	250n	330m	0.0	5.0	.80	2.0§	3.2m	.40		0	7	A339	ML3K
85#	uPD2114LC-2	1024	4	S	MNG	250n	250n*	357m	0.0	5.0	.80	2.0	3.2m	.40		1	8	A268	ML368
86#	uPD2114LD-2	1024	4	S	MNG	250n	250n*	357m	0.0	5.0	.80	2.0	3.2m	.40		1	8	A268	ML226c
87	uPD6514C-1	1024	4	S	MNG	250n	250n*		0.0	5.0	.80	2.4§	1.0u△			4	8	A485	ML368
88	Z6114-4CS	1024	4	S	MNG	250n	380n*		0.0	5.0	-.30*	2.0				0	7	A527a	ML327
89	Z6114-4PS	1024	4	S	MNG	250n	380n*		0.0	5.0	-.30*	2.0				0	7	A527a	ML327
90	Z6142-4CS	1024	4	S	MNG	250n	380n*		0.0	5.0	-.30*	2.0				0	7	A527	
91	Z6142-4PS	1024	4	S	MNG	250n	380n*		0.0	5.0	-.30*	2.0				0	7	A527	
92	2114-3CA	1024	4	S	MNG	300n	300n*	500m	0.0	5.0	.80	2.0§	2.1m	.40		0	7	A377	ML3j
93	2114-3CB	1024	4	S	MNG	300n	300n*	500m	0.0	5.0	.80	2.0§	2.1m	.40		0	7	A377	ML226a
94	2114-3CE	1024	4	S	MNG	300n	300n*	525m	0.0	5.0	.80	2.0§	2.1m	.40		0	7	A377	ML226
95	2142-3	1024	4	S	MNG	300n	300n*	525m	0.0	5.0	0.8	2.0§	10u△	4.5		0	7	A366	
96	2142L3	1024	4	S	MNG	300n	300n*	370m	0.0	5.0	0.8	2.0§	10u△	4.5		0	7	A366	
97	C2142-3	1024	4	S	MNG	300n	300n*	475m	0.0	5.0	.80	2.0§	2.1m	.40		0	7	A366	ML360a
98	C2142L-3	1024	4	S	MNG	300n	300n*	325m	0.0	5.0	.80	2.0§	2.1m	.40		0	7	A366	ML360a
99	D2114-3	1024	4	S	MNG	300n	300n*	525m	0.0	5.0	.80	2.0	3.2m	.40		0	7	A268	ML359a
100	D2114L3	1024	4	S	MNG	300n	300n*	385m	0.0	5.0	.80	2.0	3.2m	.40		0	7	A268	ML359a
101	D2142-3	1024	4	S	MNG	300n	300n*	525m	0.0	5.0	.80	2.0§	2.1	.40		0	7	A366	ML359b
102▼	D2142L3	1024	4	S	MNG	300n	300n*	370m	0.0	5.0	.80	2.0§	2.1	.40		0	7	A366	ML359b
103	EA2114L-30PC	1024	4	S	MNG	300n	300n	1.0	0.5 #	7.0 #	0.8	2.0				1	7	A268	ML165
104	F2114-3DC	1024	4	S	MNG	300n	300n*	500m	0.0	5.0	.80	2.0§	3.2m	.40		0	7	A268	ML327
105	F2114-3PC	1024	4	S	MNG	300n	300n*	500m	0.0	5.0	.80	2.0§	3.2m	.40		0	7	A268	ML3h
106	F2114L3DC	1024	4	S	MNG	300n	300n*	250m	0.0	5.0	.80	2.0§	3.2m	.40		0	7	A268	ML327
107	F2114L3PC	1024	4	S	MNG	300n	300n*	250m	0.0	5.0	.80	2.0§	3.2m	.40		0	7	A268	ML3h
108#	HM4334P-3	1024	4	S	MNG	300n	460n	1.0	0.0	5.0	.80	2.4§	1.0u△			0	7	A488	ML☑
109#	HM472114-3	1024	4	S	MNG	300n	300n*	200m†	0.0	5.0	.80	2.0§	2.1m	.40		0	7	A394	ML165c
110#	HM472114P-3	1024	4	S	MNG	300n		300m	0.0	5.0	.80	2.0§	2.1m	.40		0	7	A394	ML165e

SYMBOLS AND CODES EXPLAINED IN INTERPRETER

2. READ-WRITE MEMORIES (RAMS)

IN ORDER OF (1)No.WORDS(2)No.BITS/WORD (3)MODE(4)STRUCT.(5)MAX ACC.TIME(6)TYPE No.

LINE No.	6 TYPE No.	ORGANIZATION 1 No. WORDS	2 BITS PER WORD	3 MODE	4 STRUCTURE CODE	5 MAX ACCESS TIME (s)	MAX WRITE CYCLE TIME (s)	MAX OPER. POWER DISS. (W)	RATED POWER SUP. SPAN NEG. (V)	POS. (V)	INPUT LOGIC LEVELS MAX '0' (V)	MIN '1' (V)	MIN OUTPUT SINK CURRENT (A)	@ OUT (V)	MIN CLOCK FREQ. (Hz)	OPER. TEMP. RANGE CODE -	+	DRAWINGS LOGIC/ BLOCK	OUTLINE
1	L2114-3CA	1024	4	S	MNG	300n	300n*	368m	0.0	5.0	.80	2.0§	2.1m	.40		0	7	A377	ML3j
2	L2114-3CB	1024	4	S	MNG	300n	300n*	368m	0.0	5.0	.80	2.0§	2.1m	.40		0	7	A377	ML226a
3	L2114-3CE	1024	4	S	MNG	300n	300n*	368m	0.0	5.0	.80	2.0§	2.1m	.40		0	7	A377	ML226
4#	M5L2114LP-3	1024	4	S	MNG	300n	300n	358m	0.0	5.0	.80	2.0	2.1m	.40		0	7	A268	ML338
5#	M5L2114LS-3	1024	4	S	MNG	300n	300n	358m	0.0	5.0	.80	2.0	2.1m	.40		0	7	A268	ML337
6	M2114-3MA	1024	4	S	MNG	300n	300n*	1.0	0.0	5.0	0.8	2.0§	1.0uΔ	.40		0	7	A328	ML383
7	M2114-3ME	1024	4	S	MNG	300n	300n*	1.0	0.0	5.0	0.8	20§	10uΔ	.40		0	7	A328	ML382
8	MCM21L14-30L	1024	4	S	MNG	300n		325m	0.0	5.0	.80	2.0§	2.1m	.40		0	7	A377	ML370
9	MCM21L14-30P	1024	4	S	MNG	300n		325m	0.0	5.0	.80	2.0§	2.1m	.40		0	7	A377	ML265
10	MCM21L14C30	1024	4	S	MNG	300n	300n*	350m	0.0	5.0	.80	2.0§	2.1m	.40		0	7	A268	ML271
11	MCM21L14P30	1024	4	S	MNG	300n	300n*	350m	0.0	5.0	.80	2.0§	2.1m	.40		0	7	A268	ML265
12	MCM2114-30L	1024	4	S	MNG	300n	300n*	500m	0.0	5.0	.80	2.0§	2.1m	.40		0	7	A377	ML370
13	MCM2114-30P	1024	4	S	MNG	300n	300n*	500m	0.0	5.0	.80	2.0§	2.1m	.40		0	7	A377	ML265
14	MCM2114C30	1024	4	S	MNG	300n	300n*	500m	0.0	5.0	.80	2.0§	2.1m	.40		0	7	A268	ML271
15	MCM2114P30	1024	4	S	MNG	300n	300n*	500m	0.0	5.0	.80	2.0§	2.1m	.40		0	7	A268	ML265
16	MCS2114-30	1024	4	S	MNG	300n	300n*	500m	0.0	5.0	.80	2.0§	3.2m	.40		0	7	A394	ML115e
17	MCS2114L-30	1024	4	S	MNG	300n	300n*	350m	0.0	5.0	.80	2.0§	3.2m	.40		0	7	A394	ML115e
18	MM2114J-3	1024	4	S	MNG	300n	300n	475mØ	0.0	5.0	.80	2.0	2.1m	.40		0	7	A268	ML194e
19	MM2114J-3L	1024	4	S	MNG	300n	300n	475mØ	0.0	5.0	.80	2.0	2.1m	.40		0	7	A268	ML194e
20	MM2114N-3	1024	4	S	MNG	300n	300n	475mØ	0.0	5.0	.80	2.0	2.1m	.40		0	7	A268	ML196
21	MM2114N-3L	1024	4	S	MNG	300n	300n	475mØ	0.0	5.0	.80	2.0	2.1m	.40		0	7	A268	ML196
22	MPS2114-30	1024	4	S	MNG	300n	300n*	500m	0.0	5.0	.80	2.0§	3.2m	.40		0	7	A394	ML165f
23	MPS2114L-30	1024	4	S	MNG	300n	300n*	350m	0.0	5.0	.80	2.0§	3.2m	.40		0	7	A394	ML165f
24#	MSM2114-3RS	1024	4	S	MNG	300n	300n*	1.0	0.0	7.0	.80	2.0	2.0m	.40		0	7	A268	ML☑
25#	MSM2114L-3	1024	4	S	MNG	300n	300n*	370m	0.0	5.0	.80	2.0	10uΔ	5.5		0	7	A485	ML165g
26#	MSM5114-3AS	1024	4	S	MNG	300n	300n*	200u♦	0.0	5.0	.80	2.4	1.0uΔ	5.0		0	7	A485	ML240
27#	MSM5114-3RS	1024	4	S	MNG	300n	300n*	200u♦	0.0	5.0	.80	2.4	1.0uΔ	5.0		0	7	A485	ML165g
28	N2114-UMA	1024	4	S	MNG	300n	300n*	1.0	0.0	5.0	0.8	20§	10uΔ	.40		0	7	A268	ML382
29	N2114-UME	1024	4	S	MNG	300n	300n*	1.0	0.0	5.0	0.8	20§	10uΔ	.40		0	7	A268	ML382
30	P2114-3	1024	4	S	MNG	300n	300n*	525m	0.0	5.0	.80	2.0§	2.1m	.40		0	7	A268	ML361a
31	P2114L3	1024	4	S	MNG	300n	300n*	370m	0.0	5.0	.80	2.0§	2.1m	.40		0	7	A268	ML361a
32▼	P2142-3	1024	4	S	MNG	300n	300n*	525m	0.0	5.0	.80	2.0§	2.1	.40		0	7	A366	ML361d
33▼	P2142L3	1024	4	S	MNG	300n	300n*	370m	0.0	5.0	.80	2.0§	2.1	.40		0	7	A366	ML361d
34#	SFF821L14E-30	1024	4	S	MNG	300n	300n*	370m	0.0	5.0	0.8	2.0§	2.1m	0.4		0	7	A268	
35#	SFF821L14J-30	1024	4	S	MNG	300n	300n*	370m	0.0	5.0	0.8	2.0§	2.1m	0.4		0	7	A268	
36▼#	SFF82114E-30	1024	4	S	MNG	300n	300n	525m	0.0	5.0	.80	2.0§	2.1m	.46		0	7		
37#	SFF82114J-30	1024	4	S	MNG	300n	300n*	525m	0.0	5.0	0.8	2.0§	2.1m	0.4		0	7	A268	
38	SYC2142-3	1024	4	S	MNG	300n	300n*	500m	0.0	5.0	.80	2.0	3.2m	.40		0	7	A366	ML392
39	SYC2142L-3	1024	4	S	MNG	300n	300n*	350m	0.0	5.0	.80	2.0	3.2m	.40		0	7	A366	ML392
40	SYC2142LV-3	1024	4	S	MNG☑	300n	300n*	350m	0.0	5.0	.80	2.0				0	7	A366a	ML392
41	SYMC2114-3	1024	4	S	MNG☑	300n	300n*	500m	0.0	5.0	.80	2.0	2.0m	.40		5	C	A377	ML115a
42	SYP2142-3	1024	4	S	MNG	300n	300n*	500m	0.0	5.0	.80	2.0	3.2m	.40		0	7	A366	ML391
43	SYP2142L-3	1024	4	S	MNG	300n	300n*	350m	0.0	5.0	.80	2.0	3.2m	.40		0	7	A366	ML391
44	SYP2142LV-3	1024	4	S	MNG☑	300n	300n*	350m	0.0	5.0	.80	2.0				0	7	A366a	ML391
45	TMM314AP-3	1024	4	S	MNG	300n	300n*	550m	0.0	5.0	0.8	2.0	2.1m	0.4		0	7	A485	ML3j
46	uPD444C-2	1024	4	S	MNG	300n	300n*		0.0	5.0	.80	2.4§	1.0uΔ			4	8	A518	ML368
47#	uPD2114LC-1	1024	4	S	MNG	300n	300n*	357m	0.0	5.0	.80	2.0	3.2m	.40		1	8	A268	ML368
48#	uPD2114LD-1	1024	4	S	MNG	300n	300n*	357m	0.0	5.0	.80	2.0	3.2m	.40		1	8	A268	ML226c
49	uPD6514C-2	1024	4	S	MNG	300n	300n*		0.0	5.0	.80	2.4§	1.0uΔ			4	8	A485	ML368
50	V2114-UCB	1024	4	S	MNG	300n	300n*	315m	0.0	5.0	0.8	20§	10uΔ	.40		0	7	A268	ML382
51	V2114-UCE	1024	4	S	MNG	300n	300n*	315m	0.0	5.0	0.8	20§	10uΔ	.40		0	7	A268	ML382
52▼	Z6114-5CS	1024	4	S	MNG	300n	440n*		0.0	5.0	-.30*	2.0				0	7		ML327
53♦	Z6114-5PS	1024	4	S	MNG	300n	440n*		0.0	5.0	-.30*	2.0				0	7	A527a	ML327
54	Z6142-5CS	1024	4	S	MNG	300n	440n*		0.0	5.0	-.30*	2.0				0	7	A527	
55♦	Z6142-5PS	1024	4	S	MNG	300n	440n*		0.0	5.0	-.30*	2.0				0	7	A527	
56	AM9404CDC	1024	4	S	MNG	350nØ		1.3 ☑	0.0	5.0	.80	2.4	3.2m	.40		0	7	A487	ML147
57	AM9404CDM	1024	4	S	MNG	350nØ		1.3 ☑	0.0	5.0	.80	2.4	3.2m	.40		5	C	A487	ML147
58	MCS2114-35	1024	4	S	MNG	350n	350n*	500m	0.0	5.0	.80	2.0§	3.2m	.40		0	7	A394	ML115e
59	MCS2114L-35	1024	4	S	MNG	350n	350n*	350m	0.0	5.0	.80	2.0§	3.2m	.40		0	7	A394	ML115e
60	MPS2114-35	1024	4	S	MNG	350n	350n*	500m	0.0	5.0	.80	2.0§	3.2m	.40		0	7	A394	ML165f
61	MPS2114L-35	1024	4	S	MNG	350n	350n*	350m	0.0	5.0	.80	2.0§	3.2m	.40		0	7	A394	ML165f
62	Z6114-6CS	1024	4	S	MNG	350n	510n*		0.0	5.0	-.30*	2.0				0	7	A527a	ML327
63	Z6114-6PS	1024	4	S	MNG	350n	510n*		0.0	5.0	-.30*	2.0				0	7	A527a	ML327
64	Z6142-6CS	1024	4	S	MNG	350n	510n*		0.0	5.0	-.30*	2.0				0	7	A527	
65	Z6142-6PS	1024	4	S	MNG	350n	510n*		0.0	5.0	-.30*	2.0				0	7	A527	
66	2142	1024	4	S	MNG	450n	450n*	525m	0.0	5.0	0.8	2.0§	10uΔ	4.5		0	7	A366	
67	2142L	1024	4	S	MNG	450n	450n*	370m	0.0	5.0	0.8	2.0§	10uΔ	4.5		0	7	A366	
68	C2142	1024	4	S	MNG	450n	450n*	475m	0.0	5.0	.80	2.0§	2.1m	.40		0	7	A366	ML360a
69	C2142L	1024	4	S	MNG	450n	450n*	325m	0.0	5.0	.80	2.0§	2.1m	.40		0	7	A366	ML360a
70	D2114	1024	4	S	MNG	450n	450n*	525m	0.0	5.0	.80	2.0	3.2m	.40		0	7	A268	ML359a
71	D2114L	1024	4	S	MNG	450n	450n*	370m	0.0	5.0	.80	2.0§	2.1m	.40		1	8	A268	ML359a
72	D2142	1024	4	S	MNG	450n	450n*	525m	0.0	5.0	.80	2.0§	2.1	.40		0	7	A366	ML359b
73	EA2114LPC	1024	4	S	MNG	450n	450n	1.0	0.5 #	7.0 #	0.8	2.0				1	7	A268	ML165
74	F2114DC	1024	4	S	MNG	450n	450n*	500m	0.0	5.0	.80	2.0§	3.2m	.40		0	7	A268	ML327
75	F2114LDC	1024	4	S	MNG	450n	450n*	250m	0.0	5.0	.80	2.0§	3.2m	.40		0	7	A268	ML327
76	F2114LPC	1024	4	S	MNG	450n	450n*	250m	0.0	5.0	.80	2.0§	3.2m	.40		0	7	A268	ML3h
77	F2114PC	1024	4	S	MNG	450n	450n*	500m	0.0	5.0	.80	2.0§	3.2m	.40		0	7	A268	ML3h
78#	HM4334P-4	1024	4	S	MNG	450n	640n	1.0	0.0	5.0	.80	2.4§	1.0uΔ			0	7	A488	ML☑
79#	HM472114-4	1024	4	S	MNG	450n	450n*	200m†	0.0	5.0	.80	2.0§	2.1m	.40		0	7	A394	ML165c
80#	HM472114P-4	1024	4	S	MNG	450n		300m	0.0	5.0	.80	2.0§	2.1m	.40		0	7	A394	ML165e
81#	M5L2114LP	1024	4	S	MNG	450n	450n	358m	0.0	5.0	.80	2.0	2.1m	.40		0	7	A268	ML338
82#	M5L2114LS	1024	4	S	MNG	450n	450n	358m	0.0	5.0	.80	2.0	2.1m	.40		0	7	A268	ML337
83	MCM21L14-45L	1024	4	S	MNG	450n		325m	0.0	5.0	.80	2.0§	2.1m	.40		0	7	A377	ML370
84	MCM21L14-45P	1024	4	S	MNG	450n		325m	0.0	5.0	.80	2.0§	2.1m	.40		0	7	A377	ML265
85	MCM21L14C45	1024	4	S	MNG	450n	450n*	350m	0.0	5.0	.80	2.0§	2.1m	.40		0	7	A268	ML271
86	MCM21L14P45	1024	4	S	MNG	450n	450n*	350m	0.0	5.0	.80	2.0§	2.1m	.40		0	7	A268	ML265
87	MCM2114-45L	1024	4	S	MNG	450n	450n*	500m	0.0	5.0	.80	2.0§	2.1m	.40		0	7	A377	ML370
88	MCM2114-45P	1024	4	S	MNG	450n	450n*	500m	0.0	5.0	.80	2.0§	2.1m	.40		0	7	A377	ML265
89	MCM2114C45	1024	4	S	MNG	450n	450n*	500m	0.0	5.0	.80	2.0§	2.1m	.40		0	7	A268	ML271
90	MCM2114L	1024	4	S	MNG	450n	450n*	500m	0.0	5.0	.80	2.0§	2.1m	.40		0	7	A268	ML☑
91	MCM2114P45	1024	4	S	MNG	450n	450n*	500m	0.0	5.0	.80	2.0§	2.1m	.40		0	7	A268	ML265
92	MCM2114P	1024	4	S	MNG	450n	450n*	500m	0.0	5.0	.80	2.0§	2.1m	.40		0	7	A268	ML☑
93	MCS2114-45	1024	4	S	MNG	450n	450n*	500m	0.0	5.0	.80	2.0§	3.2m	.40		0	7	A394	ML115e
94	MCS2114L-45	1024	4	S	MNG	450n	450n*	350m	0.0	5.0	.80	2.0§	3.2m	.40		0	7	A394	ML115e
95	MCT2114-45	1024	4	S	MNG	450n	450n*	500m	0.0	5.0	.80	2.0§	3.2m	.40		0	7	A394	ML115e
96	MCT2114L-45	1024	4	S	MNG	450n	450n*	350m	0.0	5.0	.80	2.0§	3.2m	.40		0	7	A394	ML115e
97	MD2114	1024	4	S	MNG	450n	450n*	575m	0.0	5.0	.80	2.0§	2.1m	.40		6	E	A268	ML226
98	MM2114J	1024	4	S	MNG	450n	450n	475mØ	0.0	5.0	.80	2.0	2.1m	.40		0	7	A268	ML194e
99	MM2114J-L	1024	4	S	MNG	450n	450n	475mØ	0.0	5.0	.80	2.0	2.1m	.40		0	7	A268	ML194e
100	MM2114N	1024	4	S	MNG	450n	450n	475mØ	0.0	5.0	.80	2.0	2.1m	.40		0	7	A268	ML196
101	MM2114N-L	1024	4	S	MNG	450n	450n	475mØ	0.0	5.0	.80	2.0	2.1m	.40		0	7	A268	ML196
102#	MN2114	1024	4	S	MNG	450n	450n*	350m†	0.0	5.0	.80	2.4				1	8	A268	ML355
103	MPS2114-45	1024	4	S	MNG	450n	450n*	500m	0.0	5.0	.80	2.0§	3.2m	.40		0	7	A394	ML165f
104	MPS2114L-45	1024	4	S	MNG	450n	450n*	350m	0.0	5.0	.80	2.0§	3.2m	.40		0	7	A394	ML164f
105	MPT2114-45	1024	4	S	MNG	450n	450n*	500m	0.0	5.0	.80	2.0§	3.2m	.40		0	7	A394	ML165f
106	MPT2114L-45	1024	4	S	MNG	450n	450n*	350m	0.0	5.0	.80	2.0§	3.2m	.40		0	7	A394	ML164f
107#	MSM2114	1024	4	S	MNG	450n	450n*	1.0	0.0	7.0	.80	2.0	2.0m	.40		0	7	A268	ML☑
108#	MSM2114L	1024	4	S	MNG	450n	450n*	370m	0.0	5.0	.80	2.0	10uΔ	5.5		0	7	A485	ML165G
109	P2114	1024	4	S	MNG	450n	450n*	525m	0.0	5.0	.80	2.0§	2.1m	.40		0	7	A268	ML361a
110	P2114L	1024	4	S	MNG	450n	450n*	370m	0.0	5.0	.80	2.0§	2.1m	.40		0	7	A268	ML361a

SYMBOLS AND CODES EXPLAINED IN INTERPRETER

2. READ-WRITE MEMORIES (RAMS)

IN ORDER OF (1)No.WORDS(2)No.BITS/WORD (3)MODE(4)STRUCT.(5)MAX ACC.TIME(6)TYPE No.

LINE No.	6 TYPE No.	ORGANIZATION 1 No. WORDS	2 BITS PER WORD	3 MODE	4 STRUCTURE CODE	5 MAX ACCESS TIME (s)	MAX WRITE CYCLE TIME (s)	MAX OPER. POWER DISS. (W)	RATED POWER SUP. SPAN NEG. (V)	POS. (V)	INPUT LOGIC LEVELS MAX '0' (V)	MIN '1' (V)	MIN OUTPUT SINK CURRENT (A)	@ OUT (V)	MIN CLOCK FREQ. (Hz)	OPER. TEMP. RANGE CODE -	+	DRAWINGS LOGIC/ BLOCK	OUTLINE
1#	SFF821L14E-45	1024	4	S	MNG	450n	450n*	370m	0.0	5.0	0.8	2.0§	2.1m	0.4		0	7	A268	
2#	SFF821L14J-45	1024	4	S	MNG	450n	450n*	370m	0.0	5.0	0.8	2.0§	2.1m	0.4		0	7	A268	
3▼#	SFF82114E-45	1024	4	S	MNG	450n	450n	525m	0.0	5.0	.80	2.0§	2.1m	.46		0	7		
4#	SFF82114J-45	1024	4	S	MNG	450n	450n*	525m	0.0	5.0	0.8	2.0§	2.1m	0.4		0	7	A268	
5	SYC2142	1024	4	S	MNG	450n	450n*	500m	0.0	5.0	.80	2.0	3.2m	.40		0	7	A366	ML392
6	SYC2142L	1024	4	S	MNG	450n	450n*	350m	0.0	5.0	.80	2.0	3.2m	.40		0	7	A366	ML392
7	SYC2142LV	1024	4	S	MNG☑	450n	450n*	350m	0.0	5.0	.80	2.0				0	7	A366a	ML392
8	SYMC2114	1024	4	S	MNG☑	450n	450n*	500m	0.0	5.0	.80	2.0	2.0m	.40		5	C	A377	ML115e
9	SYP2142	1024	4	S	MNG	450n	450n*	500m	0.0	5.0	.80	2.0	3.2m	.40		0	7	A366	ML391
10	SYP2142L	1024	4	S	MNG	450n	450n*	350m	0.0	5.0	.80	2.0	3.2m	.40		0	7	A366	ML☑
11	SYP2142LV	1024	4	S	MNG☑	450n	450n*	350m	0.0	5.0	.80	2.0				0	7	A366a	ML391
12	TMM314AP	1024	4	S	MNG	450n	450n*	550m	0.0	5.0	0.8	2.0	2.1m	.40		0	7	A485	ML3j
13♦	TMM314APL	1024	4	S	MNG	450n	450n*	385m	0.0	5.0	0.8	2.0	2.1m	.40		0	7	A485	ML165c
14	TMS40L45-45NL	1024	4	S	MNG	450n	450n	330m	0.0	5.0	.80	2.0§	3.2m	.40		0	7	A339	ML3k
15	TMS2114-45NL	1024	4	S	MNG	450n	450n	550m	0.0	5.0	.80	2.0§	3.2m	.40		0	7	A339	ML3k
16	TMS2114L-45NL	1024	4	S	MNG	450n	450n	330m	0.0	5.0	.80	2.0§	3.2m	.40		0	7	A339	ML3K
17#	uPD2114LC	1024	4	S	MNG	450n	450n*	357m	0.0	5.0	.80	2.0	3.2m	.40		1	8	A268	ML368
18#	uPD2114LD	1024	4	S	MNG	450n	450n*	357m	0.0	5.0	.80	2.0	3.2m	.40		1	8	A268	ML226c
19	uPD6514C-3	1024	4	S	MNG	450n	450n*		0.0	5.0	.80	2.4§	1.0u△			4	8	A485	ML368
20	MPS2114-50	1024	4	S	MNG	500n	500n*	500m	0.0	5.0	.80	2.0§	3.2m	.40		0	7	A394	ML165f
21	SYC2114-2	1024	4	S	MNI☑	200n	200n*	1.0 ☑	0.0	5.0	.80	2.0	3.2m	.40		0	7	A377	ML115a
22	SYC2114L-2	1024	4	S	MNI☑	200n	200n*	1.0 ☑	0.0	5.0	.80	2.0	3.2m	.40		0	7	A377	ML115a
23	SYC2114LV-2	1024	4	S	MNI☑	200n	200n*	1.0 ☑	0.0	5.0	.80	2.0	3.2m	.40		0	7	A377	ML115a
24	SYP2114-2	1024	4	S	MNI☑	200n	200n*	1.0 ☑	0.0	5.0	.80	2.0	3.2m	.40		0	7	A377	ML165
25	SYP2114L-2	1024	4	S	MNI☑	200n	200n*	1.0 ☑	0.0	5.0	.80	2.0	3.2m	.40		0	7	A377	ML165
26	SYP2114LV-2	1024	4	S	MNI☑	200n	200n*	1.0 ☑	0.0	5.0	.80	2.0	3.2m	.40		0	7	A377	ML165
27	SYC2114-3	1024	4	S	MNI☑	300n	300n*	1.0 ☑	0.0	5.0	.80	2.0	3.2m	.40		0	7	A377	ML115a
28	SYC2114L-3	1024	4	S	MNI☑	300n	300n*	1.0 ☑	0.0	5.0	.80	2.0	3.2m	.40		0	7	A377	ML115a
29	SYC2114LV-3	1024	4	S	MNI☑	300n	300n*	1.0 ☑	0.0	5.0	.80	2.0	3.2m	.40		0	7	A377	ML115a
30	SYP2114-3	1024	4	S	MNI☑	300n	300n*	1.0 ☑	0.0	5.0	.80	2.0	3.2m	.40		0	7	A377	ML165
31	SYP2114L-3	1024	4	S	MNI☑	300n	300n*	1.0 ☑	0.0	5.0	.80	2.0	3.2m	.40		0	7	A377	ML165
32	SYP2114LV-3	1024	4	S	MNI☑	300n	300n*	1.0 ☑	0.0	5.0	.80	2.0	3.2m	.40		0	7	A377	ML165
33	SYC2114	1024	4	S	MNI☑	450n	450n*	1.0 ☑	0.0	5.0	.80	2.0	3.2m	.40		0	7	A377	ML115a
34	SYC2114L	1024	4	S	MNI☑	450n	450n*	1.0 ☑	0.0	5.0	.80	2.0	3.2m	.40		0	7	A377	ML115a
35	SYC2114LV	1024	4	S	MNI☑	450n	450n*	1.0 ☑	0.0	5.0	.80	2.0	3.2m	.40		0	7	A377	ML115a
36	SYP2114	1024	4	S	MNI☑	450n	450n*	1.0 ☑	0.0	5.0	.80	2.0	3.2m	.40		0	7	A377	ML165
37	SYP2114L	1024	4	S	MNI☑	450n	450n*	1.0 ☑	0.0	5.0	.80	2.0	3.2m	.40		0	7	A377	ML165
38	SYP2114LV	1024	4	S	MNI☑	450n	450n*	1.0 ☑	0.0	5.0	.80	2.0	3.2m	.40		0	7	A377	ML165
39♦	4104USC	1024	4	S	MNX	200n	350n*	750m	5.0	12	.70	2.4§	2.0m	.50		3	8	A514	ML162b
40	AM9114EDC	1024	4	S	MNX	200nØ	200n*	368m	0.0	5.0	.80	2.0	3.2m	.40		0	7	A485	ML194f
41	AM9114EPC	1024	4	S	MNX	200nØ	200n*	368m	0.0	5.0	.80	2.0	3.2m	.40		0	7	A485	ML3l
42	AM9124EDC	1024	4	S	MNX	200nØ	200n*	368m	0.0	5.0	.80	2.0	4.0m	.40		0	7	A485	ML194f
43	AM9124EPC	1024	4	S	MNX	200nØ	200n*	368m	0.0	5.0	.80	2.0	4.0m	.40		0	7	A485	ML3l
44	IM2114-2CJN	1024	4	S	MNX	200n	200n*	1.0 ☑	0.0	5.0	.80	2.0	10u△			0	7	A268	ML398
45	IM2114-2CPN	1024	4	S	MNX	200n	200n*	525m	0.0	5.0	.80	2.0	10u△			0	7	A268	ML402
46	IM2114-L2CJN	1024	4	S	MNX	200n	200n	1.0 ☑	0.0	5.0	.80	2.0	10u△			0	7	A268	ML398
47	IM2114-L2MJN	1024	4	S	MNX	200n	200n	1.0 ☑	0.0	5.0	.80	2.0	10u△			5	C	A268	HL398
48	IM2114L2CPN	1024	4	S	MNX	200n	200n*	385m	0.0	5.0	.80	2.0	10u△			0	7	A268	ML402
49	IM2114L2MJN/883B	1024	4	S	MNX	200n	200n*	1.0 ☑	0.0	5.0	.80	2.0	10u△			5	C	A268	ML398
50♦	M4104USC	1024	4	S	MNX	200n	350n*	750m	5.0	12	.70	2.4§	2.0m	.50		3	8	A514	ML162b
51	4104UMC	1024	4	S	MNX	250n	400n*	750m	5.0	12	.70	2.4§	2.0m	.50		5	C	A514	ML162b
52	M4104UMC	1024	4	S	MNX	250n	400n*	750m	5.0	12	.70	2.4§	2.0m	.50		5	C	A514	ML162b
53	21143MA	1024	4	S	MNX	300n	300n*	300mt	0.0	5.0	0.8	2.0§	10u△	0.4		5	9	A377	ML226a
54	AM91L14CDC	1024	4	S	MNX	300nØ	300n*	262m	0.0	5.0	.80	2.0	3.2m	.40		0	7	A485	ML194f
55	AM91L14CDM	1024	4	S	MNX	300nØ	300n*	262m	0.0	5.0	.80	2.0	3.2m	.40		5	C	A485	ML134L
56	AM91L14CPC	1024	4	S	MNX	300nØ	300n*	262m	0.0	5.0	.80	2.0	3.2m	.40		0	7	A485	ML3l
57	AM91L24CDC	1024	4	S	MNX	300nØ	300n*	262m	0.0	5.0	.80	2.0	4.0m	.40		0	7	A485	ML194f
58	AM91L24CDM	1024	4	S	MNX	300nØ	300n*	262m	0.0	5.0	.80	2.0	4.0m	.40		5	C	A485	ML134l
59	AM91L24CPC	1024	4	S	MNX	300nØ	300n*	262m	0.0	5.0	.80	2.0	4.0m	.40		0	7	A485	ML3l
60	AM9114CDC	1024	4	S	MNX	300nØ	300n*	368m	0.0	5.0	.80	2.0	3.2m	.40		0	7	A485	ML194f
61	AM9114CDM	1024	4	S	MNX	300nØ	300n*	368m	0.0	5.0	.80	2.0	3.2m	.40		5	C	A485	ML134l
62	AM9114CPC	1024	4	S	MNX	300nØ	300n*	368m	0.0	5.0	.80	2.0	3.2m	.40		0	7	A485	ML3l
63	AM9124CDC	1024	4	S	MNX	300nØ	300n*	368m	0.0	5.0	.80	2.0	4.0m	.40		0	7	A485	ML194f
64	AM9124CDM	1024	4	S	MNX	300nØ	300n*	368m	0.0	5.0	.80	2.0	4.0m	.40		5	C	A485	ML134l
65	AM9124CPC	1024	4	S	MNX	300nØ	300n*	368m	0.0	5.0	.80	2.0	4.0m	.40		0	7	A485	ML3l
66	IM2114-3CJN	1024	4	S	MNX	300n	300n*	1.0 ☑	0.0	5.0	.80	2.0	10u△			0	7	A268	ML398
67	IM2114-3CPN	1024	4	S	MNX	300n	300n*	525m	0.0	5.0	.80	2.0	10u△			0	7	A268	ML402
68	IM2114-L3CJN	1024	4	S	MNX	300n	300n	1.0 ☑	0.0	5.0	.80	2.0	10u△			0	7	A268	ML398
69	IM2114-L3MJN	1024	4	S	MNX	300n	300n	1.0 ☑	0.0	5.0	.80	2.0	10u△			5	C	A268	ML398
70	IM2114L3CPN	1024	4	S	MNX	300n	300n*	385m	0.0	5.0	.80	2.0	10u△			0	7	A268	ML402
71	IM2114L3MJN/883B	1024	4	S	MNX	300n	300n*	1.0 ☑	0.0	5.0	.80	2.0	10u△			5	C	A268	ML398
72	L21143MA	1024	4	S	MNX	300n	300n*	300mt	0.0	5.0	0.8	2.0§	10u△	0.4		5	9	A377	ML226a
73	N21143MA	1024	4	S	MNX	300n	300n*	300mt	0.0	5.0	0.8	2.0§	10u△	0.4		5	9	A377	ML226a
74	AM91L14BDC	1024	4	S	MNX	400nØ	400n*	262m	0.0	5.0	.80	2.0	3.2m	.40		0	7	A485	ML194f
75	AM91L14BDM	1024	4	S	MNX	400nØ	400n*	262m	0.0	5.0	.80	2.0	3.2m	.40		5	C	A485	ML134L
76	AM91L14BPC	1024	4	S	MNX	400nØ	400n*	262m	0.0	5.0	.80	2.0	3.2m	.40		0	7	A485	ML3l
77	AM9114BDM	1024	4	S	MNX	400nØ	400n*	368m	0.0	5.0	.80	2.0	3.2m	.40		5	C	A485	ML134l
78	2114-UCA	1024	4	S	MNX	450n	450n*	525m	0.0	5.0	0.8	2.0§	10u△			0	7	A377	ML226a
79	2114UCB	1024	4	S	MNX	450n	300nt	1.0 ☑	0.0	5.0	.80	2.4§	2.1m	.40		0	7	A328	ML3j
80	2114UCE	1024	4	S	MNX	450n	450n*	525m	0.0	5.0	.80	2.4§	2.1m	.40		0	7	A328	ML226
81	2114UMA	1024	4	S	MNX	450n	450n*	525m	0.0	5.0	.80	2.4§	2.1m	.40		5	C	A328	ML134k
82	AM91L24BDC	1024	4	S	MNX	450nØ	450n*	262m	0.0	5.0	.80	2.0	4.0m	.40		0	7	A485	ML194f
83	AM91L24BDM	1024	4	S	MNX	450nØ	450n*	262m	0.0	5.0	.80	2.0	4.0m	.40		5	C	A485	ML134l
84	AM91L24BPC	1024	4	S	MNX	450nØ	450n*	262m	0.0	5.0	.80	2.0	4.0m	.40		0	7	A485	ML3l
85	AM9114BDC	1024	4	S	MNX	450nØ	450n*	368m	0.0	5.0	.80	2.0	3.2m	.40		0	7	A485	ML194f
86	AM9114BPC	1024	4	S	MNX	450nØ	450n*	368m	0.0	5.0	.80	2.0	3.2m	.40		0	7	A485	ML3l
87	AM9124BDC	1024	4	S	MNX	450nØ	450n*	368m	0.0	5.0	.80	2.0	4.0m	.40		0	7	A485	ML194f
88	AM9124BDM	1024	4	S	MNX	450nØ	450n*	368m	0.0	5.0	.80	2.0	4.0m	.40		5	C	A485	ML134l
89	AM9124BPC	1024	4	S	MNX	450nØ	450n*	368m	0.0	5.0	.80	2.0	4.0m	.40		0	7	A485	ML3l
90	IM2114-LCJN	1024	4	S	MNX	450n	450n	1.0 ☑	0.0	5.0	.80	2.0	10u△			0	7	A268	ML398
91	IM2114-LMJN	1024	4	S	MNX	450n	450n	1.0 ☑	0.0	5.0	.80	2.0	10u△			5	C	A268	ML398
92	IM2114CJN	1024	4	S	MNX	450n	450n*	525m	0.0	5.0	.80	2.0	10u△			0	7	A268	ML3988
93	IM2114CPN	1024	4	S	MNX	450n	450n*	525m	0.0	5.0	.80	2.0	10u△			0	7	A268	ML402
94	IM2114LCPN	1024	4	S	MNX	450n	450n*	385m	0.0	5.0	.80	2.0	10u△			0	7	A268	ML402
95	IM2114LMJN/883B	1024	4	S	MNX	450n	450n*	495m	0.0	5.0	.80	2.0	10u△			5	C	A268	ML398
96	L2114-UCA	1024	4	S	MNX	450n	450n*	315m	0.0	5.0	0.8	2.0§	10u△			0	7	A377	ML226a
97	L2114UCB	1024	4	S	MNX	450n	450n*	315m	0.0	5.0	.80	2.0§	2.1m	.40		0	7	A377	ML226a
98	L2114UCE	1024	4	S	MNX	450n	450n*	315m	0.0	5.0	.80	2.0§	2.1m	.40		0	7	A377	ML226
99	L2114UMA	1024	4	S	MNX	450n	450n*	300mt	0.0	5.0	0.8	2.0§	10u△	0.4		5	9	A377	ML226a
100	M2114-UMA	1024	4	S	MNX	450n	450n*	525m	0.0	5.0	.80	2.4§	2.1m	.40		5	C	A328	ML134k
101#	MSM5115-2	1024	4	S	MXG	200n	310n*	33m	0.0	6.0	.40	4.2				0	7	A372	ML240
102#	MSM5115-3	1024	4	S	MXG	300n	420n*	33m	0.0	6.0	.40	4.2				0	7	A372	ML240
103	2114AL-1	1024	4	S	MXX	100n	100n*	1.0 ☑	0.0	5.0	0.8	2.0§	10u△			0	7	A268	
104	2114AL-2	1024	4	S	MXX	120n	120n*	1.0 ☑	0.0	5.0	0.8	2.0§	10u△			0	7	A268	
105	2114AL-3	1024	4	S	MXX	150n	150n*	1.0 ☑	0.0	5.0	0.8	2.0§	10u△			0	7	A268	
106	2114A-4	1024	4	S	MXX	200n	200n*	1.0 ☑	0.0	5.0	0.8	2.0§	10u△			0	7	A268	
107	2114AL-4	1024	4	S	MXX	200n	200n*	1.0 ☑	0.0	5.0	0.8	2.0§	10u△			0	7	A268	

SYMBOLS AND CODES EXPLAINED IN INTERPRETER

2. READ-WRITE MEMORIES (RAMS)

IN ORDER OF (1)No.WORDS(2)No.BITS/WORD (3)MODE(4)STRUCT.(5)MAX ACC.TIME(6)TYPE No.

LINE No.	6 TYPE No.	ORGANIZATION 1 No. WORDS	2 BITS PER WORD	3 MODE	4 STRUCTURE CODE	5 MAX ACCESS TIME (s)	MAX WRITE CYCLE TIME (s)	MAX OPER. POWER DISS. (W)	RATED POWER SUP. SPAN NEG. (V)	POS. (V)	INPUT LOGIC LEVELS MAX '0' (V)	MIN '1' (V)	MIN OUTPUT SINK CURRENT (A)	@ OUT (V)	MIN CLOCK FREQ. (Hz)	OPER. TEMP. RANGE CODE -	+	DRAWINGS LOGIC/ BLOCK	OUTLINE
1	AM9130EDC	1024	4	S	MXX	200n	320n*	578m	0.0	5.0	.80	2.0	3.2m	.40		0	7	A433	ML162d
2	AM9130EPC	1024	4	S	MXX	200n	320n*	368m	0.0	5.0	.80	2.0	3.2m	.40		0	7	A433	ML197d
3	AM9131EDC	1024	4	S	MXX	200n	320n*	578m	0.0	5.0	.80	2.0	3.2m	.40		0	7	A433a	ML162d
4▼#	HM472114A-2	1024	4	S	MXX	200n	200n*	1.0	0.0	5.0	.80	2.0	2.1m	.40		0	7	PN18O	
5▼#	HM472114AP-2	1024	4	S	MXX	200n	200n*	1.0	0.0	5.0	.80	2.0	2.1m	.40		0	7	PN18O	
6	2114A-5	1024	4	S	MXX	250n	250n*	1.0 ☑	0.0	5.0	0.8	2.0§	10uΔ			0	7	A268	
7	AM91L30DDC	1024	4	S	MXX	250n	395n*	368m	0.0	5.0	.80	2.0	3.2m	.40		0	7	A433	ML162d
8	AM91L30DPC	1024	4	S	MXX	250n	395n*	368m	0.0	5.0	.80	2.0	3.2m	.40		0	7	A433	ML197d
9	AM91L31DDC	1024	4	S	MXX	250n	395n*	368m	0.0	5.0	.80	2.0	3.2m	.40		0	7	A433a	ML162d
10	AM9130DDC	1024	4	S	MXX	250n	395n*	578m	0.0	5.0	.80	2.0	3.2m	.40		0	7	A433	ML162d
11	AM9130DPC	1024	4	S	MXX	250n	395n*	578m	0.0	5.0	.80	2.0	3.2m	.40		0	7	A433	ML197d
12	AM9131DDC	1024	4	S	MXX	250n	395n*	578m	0.0	5.0	.80	2.0	3.2m	.40		0	7	A433a	ML162d
13	AM91L30CDC	1024	4	S	MXX	300n	470n*	368m	0.0	5.0	.80	2.0	3.2m	.40		0	7	A433	ML162d
14	AM91L30CDM	1024	4	S	MXX	300n	470n*	368m	0.0	5.0	.80	2.0	3.2m	.40		5	C	A433	ML162d
15	AM91L30CPC	1024	4	S	MXX	300n	470n*	368m	0.0	5.0	.80	2.0	3.2m	.40		0	7	A433	ML197d
16	AM91L31CDC	1024	4	S	MXX	300n	470n*	368m	0.0	5.0	.80	2.0	3.2m	.40		0	7	A433a	ML162d
17	AM91L31CDM	1024	4	S	MXX	300n	470n*	368m	0.0	5.0	.80	2.0	3.2m	.40		5	C	A433a	ML162d
18	AM9130CDC	1024	4	S	MXX	300n	470n*	578m	0.0	5.0	.80	2.0	3.2m	.40		0	7	A433	ML162d
19	AM9130CDM	1024	4	S	MXX	300n	470n*	578m	0.0	5.0	.80	2.0	3.2m	.40		5	C	A433	ML162d
20	AM9130CPC	1024	4	S	MXX	300n	470n*	578m	0.0	5.0	.80	2.0	3.2m	.40		0	7	A433	ML197d
21	AM9131CDC	1024	4	S	MXX	300n	470n*	578m	0.0	5.0	.80	2.0	3.2m	.40		0	7	A433a	ML162d
22	AM9131CDM	1024	4	S	MXX	300n	470n*	578m	0.0	5.0	.80	2.0	3.2m	.40		5	C	A433a	ML162d
23	AM91L30BDC	1024	4	S	MXX	400n	620n*	368m	0.0	5.0	.80	2.0	3.2m	.40		0	7	A433	ML162d
24	AM91L30BDM	1024	4	S	MXX	400n	620n*	368m	0.0	5.0	.80	2.0	3.2m	.40		5	C	A433	ML162d
25	AM91L30BPC	1024	4	S	MXX	400n	620n*	368m	0.0	5.0	.80	2.0	3.2m	.40		0	7	A433	ML197d
26	AM91L31BDC	1024	4	S	MXX	400n	620n*	368m	0.0	5.0	.80	2.0	3.2m	.40		0	7	A433a	ML162d
27	AM91L31BDM	1024	4	S	MXX	400n	620n*	368m	0.0	5.0	.80	2.0	3.2m	.40		5	C	A433a	ML162d
28	AM9130BDC	1024	4	S	MXX	400n	620n*	578m	0.0	5.0	.80	2.0	3.2m	.40		0	7	A433	ML162d
29	AM9130BDM	1024	4	S	MXX	400n	620n*	578m	0.0	5.0	.80	2.0	3.2m	.40		5	C	A433	ML162d
30	AM9130BPC	1024	4	S	MXX	400n	620n*	578m	0.0	5.0	.80	2.0	3.2m	.40		0	7	A433	ML197d
31	AM9131BDC	1024	4	S	MXX	400n	620n*	578m	0.0	5.0	.80	2.0	3.2m	.40		0	7	A433a	ML162d
32	AM9131BDM	1024	4	S	MXX	400n	620n*	578m	0.0	5.0	.80	2.0	3.2m	.40		5	C	A433a	ML162d
33	AM91L30ADC	1024	4	S	MXX	500n	770n*	368m	0.0	5.0	.80	2.0	3.2m	.40		0	7	A433	ML162d
34	AM91L30ADM	1024	4	S	MXX	500n	770n*	368m	0.0	5.0	.80	2.0	3.2m	.40		5	C	A433	ML162d
35	AM91L30APC	1024	4	S	MXX	500n	770n*	368m	0.0	5.0	.80	2.0	3.2m	.40		0	7	A433	ML197d
36	AM91L31ADC	1024	4	S	MXX	500n	770n*	368m	0.0	5.0	.80	2.0	3.2m	.40		0	7	A433a	ML162d
37	AM91L31ADM	1024	4	S	MXX	500n	770n*	368m	0.0	5.0	.80	2.0	3.2m	.40		5	C	A433a	ML162d
38	AM9130ADC	1024	4	S	MXX	500n	770n*	578m	0.0	5.0	.80	2.0	3.2m	.40		0	7	A433	ML162d
39	AM9130ADM	1024	4	S	MXX	500n	770n*	578m	0.0	5.0	.80	2.0	3.2m	.40		5	C	A433	ML162d
40	AM9130APC	1024	4	S	MXX	500n	770n*	578m	0.0	5.0	.80	2.0	3.2m	.40		0	7	A433	ML197d
41	AM9131ADC	1024	4	S	MXX	500n	770n*	578m	0.0	5.0	.80	2.0	3.2m	.40		0	7	A433a	ML162d
42	AM9131ADM	1024	4	S	MXX	500n	770n*	578m	0.0	5.0	.80	2.0	3.2m	.40		5	C	A433a	ML162d
43	2614-15F	1024	5	S	MNG	150n	150n*	102m†	0.0	5.0	.80	2.0§				0	7	A488	ML226
44	2614-15I	1024	5	S	MNG	150n	150n*	102m†	0.0	5.0	.80	2.0§				0	7	A488	ML134j
45	2614-15N	1024	5	S	MNG	150n	150n*	102m†	0.0	5.0	.80	2.0§				0	7	A488	ML291
46	2614-25F	1024	5	S	MNG	250n	250n	102m†	0.0	5.0	.80	2.0§				0	7	A488	ML226
47	2614-25I	1024	5	S	MNG	250n	250n	102m†	0.0	5.0	.80	2.0§				0	7	A488	ML134j
48	2614-25N	1024	5	S	MNG	250n	250n	102m†	0.0	5.0	.80	2.0§				0	7	A488	ML291
49	2614-45F	1024	5	S	MNG	450n	450n	102m†	0.0	5.0	.80	2.0§				0	7	A488	ML226
50	2614-45I	1024	5	S	MNG	450n	450n	102m†	0.0	5.0	.80	2.0§				0	7	A488	ML134j
51	2614-45N	1024	5	S	MNG	450n	450n	102m†	0.0	5.0	.80	2.0§				0	7	A488	ML291
52	2614-20F	1024	5	S	MNG	200m	200n*	102m†	0.0	5.0	.80	2.0§				0	7	A488	ML226
53	2614-20I	1024	5	S	MNG	200m	200n*	102m†	0.0	5.0	.80	2.0§				0	7	A488	ML134j
54	2614-20N	1024	5	S	MNG	200m	200n*	102m†	0.0	5.0	.80	2.0§				0	7	A488	ML291
55	MK4808-5	1024	8	D	MNG	300n	540n	150m	0.0	5.0	.80	2.2	4.0m	.40	500 Δ	0	7		
56♦	MK4801AJ-55	1024	8	S		55n	65n*	1.0 ☑	0.0	5.0	0.8	2.2	50uΔ			0	7	A532	ML390
57	MK4801AJ-70	1024	8	S		70n	80n*	1.0 ☑	0.0	5.0	0.8	2.2	50uΔ			0	7		ML390
58♦	MK4801AN-70	1024	8	S		70n	80n*	1.0 ☑	0.0	5.0	0.8	2.2	50uΔ			0	7	A532	ML419
59▼	MK4801AJ-90	1024	8	S		90n	100n*	1.0 ☑	0.0	5.0	0.8	2.2	50uΔ			0	7	A532	ML390
60	MK4801AN-90	1024	8	S		90n	100n*	1.0 ☑	0.0	5.0	0.8	2.2	50uΔ			0	7		
61	ID8185	1024	8	S	MNG			1.5 ☑	0.0	5.0	0.8	2.0	10uΔ	4.5		4	8	A511	
62▼	MK4801AN-55	1024	8	S	MNG	55n	55n*	1.0 ☑	0.0	5.0	.80	2.2	50uΔ	.40		0	7	A532	ML419
63▼	MK4801AP-70	1024	8	S	MNG	70n	70n*	1.0 ☑	0.0	5.0	.80	2.2	50uΔ	.40		0	7	A532	ML224
64▼	MKB4118J-82	1024	8	S	MNG	150n	150n*	1.0 ☑	0.0	5.0	.80	2.4	10uΔ	5.0		5	C	A532	
65▼	MKB4118P-82	1024	8	S	MNG	150n	150n*	1.0 ☑	0.0	5.0	.80	2.4	10uΔ	5.0		5	C	A532	
66	uPD421D-5	1024	8	S	MNG	150n	150n*		0.0	5.0	.80	2.0§	50uΔ	5.5		0	7	A515	ML77e
67▼	MKB4118J-83	1024	8	S	MNG	200n	200n*	1.0 ☑	0.0	5.0	.80	2.4	10uΔ	5.0		5	C	A532	
68▼	MKB4118P-83	1024	8	S	MNG	200n	200n*	1.0 ☑	0.0	5.0	.80	2.4	10uΔ	5.0		5	C	A532	
69	uPD421D-3	1024	8	S	MNG	200n	200n*		0.0	5.0	.80	2.0§	50uΔ	5.5		0	7	A515	ML77e
70	uPD421D-2	1024	8	S	MNG	250n	250n*		0.0	5.0	.80	2.0§	50u	5.5		0	7	A515	ML77e
71	8108-3MD	1024	8	S	MNG	300n	450n	1.6	0.0	5.0	0.8	2.0	10uΔ	.40		0	7	A330	ML229
72	8118-3MD	1024	8	S	MNG	300n	450n	1.6	0.0	5.0	5.25	.50	10uΔ	.40		0	7	A330	ML229
73	M8108-3MD	1024	8	S	MNG	300n	450n*	1.6	0.0	5.0	0.8	2.0	10uΔ	.40		0	7	A330	ML229
74	M8118-3MD	1024	8	S	MNG	300n	450n*	1.6	0.0	5.0	0.8	2.0	10uΔ	.40		0	7	A330	ML229
75	R8108-3C	1024	8	S	MNG☑	300n	450n*	270m	0.0	5.0	0.8	2.0	10uΔ	0.4		0	6	A330	ML339
76	R8108-3P	1024	8	S	MNG☑	300n	450n*	270m	0.0	5.0	0.8	2.0	10uΔ	0.4		0	6	A330	ML339
77	uPD421D-1	1024	8	S	MNG	300n	300n*		0.0	5.0	.80	2.0§	50uΔ	5.5		0	7	A515	ML77e
78	R8108-4C	1024	8	S	MNG☑	400n	575n*	270m	0.0	5.0	0.8	2.0	10uΔ	0.4		0	6	A330	ML339
79	R8108-4P	1024	8	S	MNG☑	400n	575n*	270m	0.0	5.0	0.8	2.0	10uΔ	0.4		0	6	A330	ML339
80	TMS4008NL0	1024	8	S	MNG	450n	450n	475m	0.0	5.0		§ §				0	7	PN24jd	ML72f
81	TMS4008NL1	1024	8	S	MNG	450n	450n	475m	0.0	5.0						0	7	PN24jd	ML72f
82	uPD421D	1024	8	S	MNG	450n	450n*		0.0	5.0	.80	2.0§	50uΔ	5.5		0	7	A515	ML77e
83	8108-5MD	1024	8	S	MNG	500n	700n	1.6	0.0	5.0	5.25	.50	10uΔ	.40		0	7	A330	ML229
84	8118-5MD	1024	8	S	MNG	500n	700n	1.6	0.0	5.0	5.25	.50	10uΔ	.40		0	7	A330	ML229
85	M8108-5MD	1024	8	S	MNG	500n	700n	1.6	0.0	5.0	0.8	2.0	10uΔ	.40		0	7	A330	ML229
86	M8118-5MD	1024	8	S	MNG	500n	700n	1.6	0.0	5.0	0.8	2.0	10uΔ	.40		0	7	A330	ML229
87	R8108-5C	1024	8	S	MNG☑	500n	700n*	270m	0.0	5.0	0.8	2.0	10uΔ	0.4		0	6	A330	ML339
88	R8108-5P	1024	8	S	MNG☑	500n	700n*	270m	0.0	5.0	0.8	2.0	10uΔ	0.4		0	6	A330	ML339
89	8108-3CD	1024	8	S	MNX	300n	450n*	250m	0.0	5.0	.80	2.0	2.1m	.40		0	7	A330	ML229
90	8118-3CJ	1024	8	S	MNX	300n	450n*	250m	0.0	5.0	.80	2.0	2.1m	.40		0	7	A330a	ML30j
91	8108-5CD	1024	8	S	MNX	500n	700n*	250m	0.0	5.0	.80	2.0	2.1m	.40		0	7	A330	ML229
92	8118-5CJ	1024	8	S	MNX	500n	700n*	250m	0.0	5.0	.80	2.0	2.1m	.40		0	7	A330a	ML30j
93	HM6503-5	2048	1	S	MCG			35m	0.0	5.0	.80	3.0				0	7	A400	
94	HM6503-9	2048	1	S	MCG			35m	0.0	5.0	.80	3.0				4	8	A400	
95▼	MK4816J-3	2048	8	P	MNG	200n	430nΔ*	150m	0.0	5.0	0.8	2.2	10uΔ			0	7	A534	ML390
96	MK4816J-4	2048	8	P	MNG	250n	550n*Δ	150m	0.0	5.0	0.8	2.2	10uΔ			0	7		ML390
97	MK4816N-4	2048	8	P	MNG	250n	550n*Δ	150m	0.0	5.0	0.8	2.2	10uΔ			0	7		
98▼	MK4816J-5	2048	8	P	MNG	300n	675n*Δ	150m	0.0	5.0	0.8	2.2	10uΔ			0	7	A534	ML390
99♦	MK4816N-5	2048	8	P	MNG	300n	675n*Δ	150m	0.0	5.0	0.8	2.2	10uΔ			0	7	A534	
100♦	MK4802J-70	2048	8	S		70n	80n*	1.0 ☑	0.0	5.0	0.8	2.2	50uΔ			0	7	A533	ML390
101♦	MK4802N-70	2048	8	S		70n	80n*	1.0 ☑	0.0	5.0	0.8	2.2	50uΔ			0	7	A533	ML419
102♦	MK4802J-90	2048	8	S		90n	100n*	1.0 ☑	0.0	5.0	0.8	2.2	50uΔ			0	7	A533	ML390
103♦	MK4802N-90	2048	8	S		90n	100n*	1.0 ☑	0.0	5.0	0.8	2.2	50uΔ			0	7	A533	ML419
104♦	MK4802N-1	2048	8	S		120n	120n*	1.0 ☑	0.0	5.0	0.8	2.2	50uΔ			0	7	A533	ML419
105#	M58725S-15	2048	8	S		150n	150n*	1.0	0.0	5.0	0.8	2.0§				0	6	A471	ML☑
106	MK4802J-3	2048	8	S		200n	200n*	1.0 ☑	0.0	5.0	0.8	2.2	50uΔ			0	7		ML390
107▼	TC5516AP	2048	8	S	MCG	250n	250n	385m	0.0	5.0	.80	2.2	2.0m	.40		3	8	A522	ML118e
108▼	TC5516APL	2048	8	S	MCG	250n	250n	385m	0.0	5.0	.80	2.2	2.0m	.40		3	8	A522	ML118e
109	MK4802P-70	2048	8	S	MN☑	70n	70n		0.0	5.0	.80	2.1						B457	
110	MK4802P-90	2048	8	S	MN☑	90n	90n		0.0	5.0	.80	2.1						B457	

SYMBOLS AND CODES EXPLAINED IN INTERPRETER

2. READ-WRITE MEMORIES (RAMS)

IN ORDER OF (1)No.WORDS(2)No.BITS/WORD (3)MODE(4)STRUCT.(5)MAX ACC.TIME(6)TYPE No.

LINE No.	6 TYPE No.	ORGANIZATION 1 No. WORDS	2 BITS PER WORD	3 MODE	4 STRUCTURE CODE	5 MAX ACCESS TIME (s)	MAX WRITE CYCLE TIME (s)	MAX OPER. POWER DISS. (W)	RATED POWER SUP. SPAN NEG. (V)	POS. (V)	INPUT LOGIC LEVELS MAX '0' (V)	MIN '1' (V)	MIN OUTPUT SINK CURRENT (A)	@ OUT (V)	MIN CLOCK FREQ. (Hz)	OPER. TEMP. RANGE CODE -	+	DRAWINGS LOGIC/ BLOCK	OUTLINE
1♦	TMM2016P-1	2048	8	S	MNG	100n	100n*	660m	0.0	5.0	0.8	2.2	2.1m	0.4		0	7	A452	ML118e
2#	HM6116LP-2	2048	8	S	MNG	120n	120n	1.0	0.0	5.0	.80	2.2§	2.0u△			0	7	A489	ML☑
3#	HM6116P-2	2048	8	S	MNG	120n	120n	1.0	0.0	5.0	.80	2.2§	10u△			0	7	A489	ML☑
4▼	MK4802J-1	2048	8	S	MNG	120n	120n*	1.0 ☑	0.0	5.0	.80	2.2	10u△	.40		0	7	A553	ML390
5▼	MK4802P-1	2048	8	S	MNG	120n	120n*	1.0 ☑	0.0	5.0	.80	2.2	10u△	.40		0	7	A553	ML224
6#	HM6116LP-3	2048	8	S	MNG	150n	150n	1.0	0.0	5.0	.80	2.2§	2.0u△			0	7	A489	ML☑
7#	HM6116P-3	2048	8	S	MNG	150n	150n	1.0	0.0	5.0	.80	2.2§	10u△			0	7	A489	ML☑
8#	M58725P-15	2048	8	S	MNG	150n	150n	1.0	0.0	5.0	0.8	2.0§				0	6	A471	ML☑
9♦	TMM2016P	2048	8	S	MNG	150n	150n*	550m	0.0	5.0	0.8	2.2	2.1m	0.4		0	7	A452	ML118e
10#	HM6116LP-4	2048	8	S	MNG	200n	200n	1.0	0.0	5.0	.80	2.2§	2.0u△			0	7	A489	ML☑
11#	HM6116P-4	2048	8	S	MNG	200n	200n	1.0	0.0	5.0	.80	2.2§	10u△			0	7	A489	ML☑
12#	M58725P	2048	8	S	MNG	200n	200n*	1.0	0.0	5.0	0.8	2.0§				0	6	A471	ML☑
13#	M58725S	2048	8	S	MNG	200n	200n*	1.0	0.0	5.0	0.8	2.0§				0	6	A471	ML☑
14▼	MK4802N-3	2048	8	S	MNG	200n	200n*	1.0 ☑	0.0	5.0	.80	2.2	10u△	.40		0	7	A553	ML419
15▼	MK4802P-3	2048	8	S	MNG	200n	200n*	1.0 ☑	0.0	5.0	.80	2.2	10u△	.40		0	7	A553	ML224
16#	MSM2128	2048	8	S	MNG	200n	200n*	500m	0.0	5.0	.80	2.0				0	7	A452	ML☑
17#	MSM2128-1	2048	8	S	MNG	200n	200n*	660m	0.0	5.0	.80	2.0	10u△	5.0		0	7	A489	ML59
18	TMS4016NL	2048	8	S	MNG	450n	450n	475m	0.0	5.0	.80	2.0§	50u			0	7	A452	ML30k
19▼	MK4147J-55	4000	1	S	MNG	55n	55n*	500m	0.0	5.0	.80	2.0	50u△	4.5		0	7	PN18w	ML351
20▼	MK2141J-2	4000	1	S	MNG	120n	120n*	1.0 ☑	0.0	5.0	.80	2.0△	10u△	5.0		0	7	PN18y	
21▼	MK2141N-2	4000	1	S	MNG	120n	120n*	1.0 ☑	0.0	5.0	.80	2.0△	10u△	5.0		0	7	PN18y	
22▼	MK2141J-3	4000	1	S	MNG	150n	150n*	1.0 ☑	0.0	5.0	.80	2.0△	10u△	5.0		0	7	PN18y	
23▼	MK2141N-3	4000	1	S	MNG	150n	150n*	1.0 ☑	0.0	5.0	.80	2.0△	10u△	5.0		0	7	PN18y	
24	MEM-3	4000	8	S			500n	425m	0.0	5.0						0	7		
25	MK2147N-55	4096	1			55n	55n	900m	0.0	5.0	0.8	2.0				0	7		
26	MK2147N-70	4096	1			70n	70n	800m	0.0	5.0	0.8	2.0				0	7		
27	MK2147J-85	4096	1			85n	85n	800m	0.0	5.0	0.8	2.0				0	7		
28	MK2147N-85	4096	1			85n	85n	800m	0.0	5.0	0.8	2.0				0	7		
29	TMS21L47-7JDL	4096	1		MNG		70n*△	770m	0.0	5.0	0.8	2.0				0	7		
30▼	TMS21L47-7JL	4096	1		MNG		70n△*	770m	0.0	5.0	.80	2.0				0	7		
31	TMS2147-5JDL	4096	1		MNG		55n*△	990m	0.0	5.0	0.8	2.0				0	7		
32	TMS2147-7JDL	4096	1		MNG		70n*△	880m	0.0	5.0	0.8	2.0				0	7		
33	TMS2147-7JL	4096	1		MNG		70n*△	880m	0.0	5.0	0.8	2.0				0	7		
34	TMS2147-9JDL	4096	1		MNG		90n*△	990m	0.0	5.0	0.8	2.0				0	7		
35	TMS2147-9JL	4096	1		MNG		90n*△	990m	0.0	5.0	0.8	2.0				0	7		
36	TMS2147-9NL	4096	1		MNG		90n*△	990m	0.0	5.0	0.8	2.0				0	7		
37	TMS4164-10JDL	4096	1		MNG		200n*△	250m	0.0	5.0	0.8	2.4				0	7		
38	TMS4164-12JDL	4096	1		MNG		250n*△	200m	0.0	5.0	0.8	2.4				0	7		
39	uPD414D-1	4096	1	D			375n*△	200m	5.0	12	.80	2.4§				0	7		
40	MM5280J-5	4096	1	D		270n	470n*	1.3 ☑	5.0	12	.60	2.4	10u△	5.25		0	7		ML☑
41	MM5280N-5	4096	1	D		270n	470n*	1.3 ☑	5.0	12	.60	2.4	10u△	5.25		0	7		ML☑
42	93481ADC	4096	1	D	BTX	100n	240n*	500m†	0.0	5.0	.80	2.1§	16m	.50	500 △	0	7	A317	ML1k
43	93481AFC	4096	1	D	BTX	100n	240n*	500m†	0.0	5.0	.80	2.1§	16m	.50	500 △	0	7	A317	FL14
44	93481APC	4096	1	D	BTX	100n	240n*	500m†	0.0	5.0	.80	2.1§	16m	.50	500 △	0	7	A317	ML170
45	93481DC	4096	1	D	BTX	120n	280n*	500m†	0.0	5.0	.80	2.1§	16m	.50	500 △	0	7	A317	ML1k
46	93481FC	4096	1	D	BTX	120n	280n*	500m†	0.0	5.0	.80	2.1§	16m	.50	500 △	0	7	A317	FL14
47	93481PC	4096	1	D	BTX	120n	280n*	500m†	0.0	5.0	.80	2.1§	16m	.50	500 △	0	7	A317	ML170
48	KM868O	4096	1	D	MCG	100n	200n*△	350m	5	12		§							
49	MCM6604L2	4096	1	D	MNG			630m	5.0	12	0.8	2.4§				0	6	A494	ML317
50	MCM6604L4	4096	1	D	MNG			630m	5.0	12	0.8	2.4§				0	6	A494	ML389
51	MCM6604L	4096	1	D	MNG			630m	5.0	12	0.8	2.4§				0	6	A494	ML389
52	MCM6604P2	4096	1	D	MNG			630m	5.0	12	0.8	2.4§				0	6	A494	ML389
53	MCM6604P4	4096	1	D	MNG			630m	5.0	12	0.8	2.4§				0	6	A494	M1317
54	MCM6604P	4096	1	D	MNG			630m	5.0	12	0.8	2.4§				0	6	A494	ML317
55	IM7027-1CJE	4096	1	D	MNG	120n	250n*	470m	5.0	12	.80	2.2§	3.2m	.40	500 △	0	7	A324	ML127r
56	MCM4027AC1	4096	1	D	MNG	120n	320n*	470m	5.0	12	.80	2.2§	3.2m	.40	500 △	0	7	A264	ML372
57	MK4027J-1	4096	1	D	MNG	120n	320n△	462m	5.0	12	.80	2.2§	3.2m	.40	500 △	0	7	A264	ML350
58	MK4027N-1	4096	1	D	MNG	120n	320n*	462m	5.0	12	.80	2.2§	3.2m	.40	500 △	0	7	A264	ML349
59	MK4027P-1	4096	1	D	MNG	120n	320n*	462m	5.0	12	.80	2.2§	3.2m	.40	500 △	0	7	A264	ML225
60	4027-2F	4096	1	D	MNG	150n	320n*	462m	5.0	12	.80	2.4§	3.2m	.40	500 △	0	7	A264a	ML127r
61	4027-2I	4096	1	D	MNG	150n	320n*	462m	5.0	12	.80	2.4§	3.2m	.40	500 △	0	7	A264a	ML107a
62	4027-2N	4096	1	D	MNG	150n	320n*	462m	5.0	12	.80	2.4§	3.2m	.40	500 △	0	7	A264a	ML132
63	D2104A-1	4096	1	D	MNG	150n	320n*	420m	5.0	12	.80	2.4§	3.2m	.40	500 △	0	7	A191a	ML359
64	D2107C-1	4096	1	D	MNG	150n	380n*	420m	5.0	12	.80	2.4	3.2m	.40	500 △	0	7	A189a	ML359c
65	IM7027-2CJE	4096	1	D	MNG	150n	330 *△	470m	5.0	12	.80	2.2§	10u△			0	7	A324	ML396
66	IM7027-2CTE	4096	1	D	MNG	150n	330 *△	470m	5.0	12	.80	2.2§	10u△			0	7	A324	ML396
67#	ITT4027-2D	4096	1	D	MNG	150n	330n△*	1.0 ☑	5.0	12	.80	2.2§	3.2m	.40	500 △	0	7	PN16j	ML127f
68	ITT4027-2N	4096	1	D	MNG	150n		1.0 ☑	5.0	12	.80	2.2§	3.2m	.40	500 △	0	7	PN16j	ML170
69#	M4027P-2B1	4096	1	D	MNG	150n	320n*	470m	5.0	12	.80	2.2§	3.2m	.40	500	0	7	A264	ML301
70#	M4027P-2D1	4096	1	D	MNG	150n	320n*	470m	5.0	12	.80	2.2§	3.2m	.40	500	0	7	A264	ML302
71#	M4027P-2F1	4096	1	D	MNG	150n	320n*	470m	5.0	12	.80	2.2§	3.2m	.40	500	0	7	A264	ML300
72	MCM4027AC2	4096	1	D	MNG	150n	320n*	470m	5.0	12	.80	2.2§	3.2m	.40	500 △	0	7	A264	ML372
73	MCM4027C2	4096	1	D	MNG	150n	330n△	470m	5.0	12	.80	2.2§	3.2m	.40	500 △	0	7	A264	ML157a
74	MCM4027L2	4096	1	D	MNG	150n	330n△	470m	5.0	12	.80	2.2§	3.2m	.40	500 △	0	7	A264	ML98b
75	MCM6605AL1	4096	1	D	MNG	150n	390n*	437m	5.0	12	.80	3.0§	2.0m	.45	500 △	0	7	A148	ML8x
76	MCM6605AP1	4096	1	D	MNG	150n	390n*	437m	5.0	12	.80	3.0§	2.0m	.45	500 △	0	7	A148	ML212
77	MK4027J-2	4096	1	D	MNG	150n	320n△	462m	5.0	12	.80	2.2§	3.2m	.40	500 △	0	7	A264	ML350
78	MK4027N-2	4096	1	D	MNG	150n	320n*	462m	5.0	12	.80	2.2§	3.2m	.40	500 △	0	7	A264	ML349
79	MK4027P-2	4096	1	D	MNG	150n	320n*	462m	5.0	12	.80	2.2§	3.2m	.40	500 △	0	7	A264	ML225
80	P2104A-1	4096	1	D	MNG	150n	320n	420m	5.0	12	.80	2.4§	3.2m	.40		0	7	A191a	ML361
81	P2107C-1	4096	1	D	MNG	150n	380n*	420m	5.0	12	.80	2.4	3.2m	.40	500 △	0	7	A189a	ML361b
82	4027-3F	4096	1	D	MNG	200n	375n*	462m	5.0	12	.80	2.4§	3.2m	.40	500 △	0	7	A264a	ML127r
83	4027-3I	4096	1	D	MNG	200n	375n*	462m	5.0	12	.80	2.4§	3.2m	.40	500 △	0	7	A264a	ML107a
84	4027-3N	4096	1	D	MNG	200n	375n*	462m	5.0	12	.80	2.4§	3.2m	.40	500 △	0	7	A264a	ML132
85	AM90L60EDC	4096	1	D	MNG	200nØ	400n*	396m	5.0	12	.80	2.4	3.2m	.40		0	7	A483	ML154
86	AM90L60EPC	4096	1	D	MNG	200nØ	400n*	396m	5.0	12	.80	2.4	3.2m	.40		0	7	A483	ML197c
87	AM9050EDC	4096	1	D	MNG	200nØ	400n*	750m	5.0	12	.80	2.4	5.0m	.40		0	7	A483a	ML194f
88	AM9050EPC	4096	1	D	MNG	200nØ	400n*	750m	5.0	12	.80	2.4	5.0m	.40		0	7	A483a	ML3I
89	AM9060EDC	4096	1	D	MNG	200nØ	400n*	750m	5.0	12	.80	2.4	3.2m	.40		0	7	A483	ML154
90	AM9060EPC	4096	1	D	MNG	200nØ	400n*	750m	5.0	12	.80	2.4	3.2m	.40		0	7	A483	ML197c
91	D2104A-2	4096	1	D	MNG	200n	320n*	384m	5.0	12	.80	2.4§	3.2m	.40	500 △	0	7	A191a	ML359
92	D2107C-2	4096	1	D	MNG	200n	400n*	396m	5.0	12	.80	2.4	3.2m	.40	500 △	0	7	A189a	ML359c
93	IM7027-3CJE	4096	1	D	MNG	200n	420 *△	470m	5.0	12	.80	2.2§	10u△			0	7	A324	ML396
94	IM7027-3CTE	4096	1	D	MNG	200n	420 *△	470m	5.0	12	.80	2.2§	10u△			0	7	A324	ML396
95#	ITT4027-3D	4096	1	D	MNG	200n	420n△*	1.0 ☑	5.0	12	.80	2.2§	3.2m	.40	500 △	0	7	PN16j	ML127f
96	ITT4027-3N	4096	1	D	MNG	200n		1.0 ☑	5.0	12	.80	2.2§	3.2m	.40	500 △	0	7	PN16j	ML170
97#	M4027P-3B1	4096	1	D	MNG	200n	375n*	470m	5.0	12	.80	2.2§	3.2m	.40	500	0	7	A264	ML301
98#	M4027P-3D1	4096	1	D	MNG	200n	375n*	470m	5.0	12	.80	2.2§	3.2m	.40	500	0	7	A264	ML302
99#	M4027P-3F1	4096	1	D	MNG	200n	375n*	470m	5.0	12	.80	2.2§	3.2m	.40	500	0	7	A264	ML300
100	MCM4027AC3	4096	1	D	MNG	200n	375n*	470m	5.0	12	.80	2.2§	3.2m	.40	500 △	0	7	A264	ML372
101	MCM4027C3	4096	1	D	MNG	200n	420n△	470m	5.0	12	.80	2.2§	3.2m	.40	500 △	0	7	A264	ML157a
102	MCM4027L3	4096	1	D	MNG	200n	420n△	470m	5.0	12	.80	2.2§	3.2m	.40	500 △	0	7	A264	ML98b
103	MCM4027P3	4096	1	D	MNG	200n	375n	470m†	5.0	12	.80	2.4§	3.2m	.40	500 △	0	7	A264	ML98b
104	MCM6605AL2	4096	1	D	MNG	200n	490n*	437m	5.0	12	.80	3.0§	2.0m	.45	500 △	0	7	A148	ML8x
105	MCM6605AP2	4096	1	D	MNG	200n	490n*	437m	5.0	12	.80	3.0§	2.0m	.45	500 △	0	7	A148	ML212
106	MK4027J-3	4096	1	D	MNG	200n	375n△	462m	5.0	12	.80	2.2§	3.2m	.40	500 △	0	7	A264	ML350
107	MK4027N-3	4096	1	D	MNG	200n	375n*	462m	5.0	12	.80	2.2§	3.2m	.40	500 △	0	7	A264	ML349
108	MK4027P-3	4096	1	D	MNG	200n	375n*	462m	5.0	12	.80	2.2§	3.2m	.40	500 △	0	7	A264	ML225
109	MKB4027J-83	4096	1	D	MNG	200n	375n	467m	0.0	12	.80	2.7§	10u△			5	8	A264	ML350
110	MM5280J	4096	1	D	MNG	200n	400n*	1.3 ☑	5.0	12	.60	2.4§	10u△	5.25			7	A293	ML☑

SYMBOLS AND CODES EXPLAINED IN INTERPRETER

2. READ-WRITE MEMORIES (RAMS)

IN ORDER OF (1)No.WORDS(2)No.BITS/WORD (3)MODE(4)STRUCT.(5)MAX ACC.TIME(6)TYPE No.

LINE No.	6 TYPE No.	ORGANIZATION 1 No. WORDS	2 BITS PER WORD	3 MODE	4 STRUCTURE CODE	5 MAX ACCESS TIME (s)	MAX WRITE CYCLE TIME (s)	MAX OPER. POWER DISS. (W)	RATED POWER SUP. SPAN NEG. (V)	RATED POWER SUP. SPAN POS. (V)	INPUT LOGIC LEVELS MAX '0' (V)	INPUT LOGIC LEVELS MIN '1' (V)	MIN OUTPUT SINK CURRENT (A)	MIN OUTPUT SINK CURRENT @ OUT (V)	MIN CLOCK FREQ. (Hz)	OPER. TEMP. RANGE CODE -	OPER. TEMP. RANGE CODE +	DRAWINGS LOGIC/ BLOCK	DRAWINGS OUTLINE
1	MM5280N	4096	1	D	MNG	200n	400n*	1.3 ☑	5.0	12	.60	2.4§	10uΔ	5.25		0	7	A293	ML☑
2	P2104A-2	4096	1	D	MNG	200n	375n	384m	5.0	12	.80	2.4§	3.2m	.40		0	7	A191a	ML361
3	P2107C-2	4096	1	D	MNG	200n	400n*	396m	5.0	12	.80	2.4	3.2m	.40	500 Δ	0	7	A189a	ML361b
4	4027-4F	4096	1	D	MNG	250n	375n*	462m	5.0	12	.80	2.4§	3.2m	.40	500 Δ	0	7	A264a	ML127r
5	4027-4I	4096	1	D	MNG	250n	375n*	462m	5.0	12	.80	2.4§	3.2m	.40	500 Δ	0	7	A264a	ML107a
6	4027-4N	4096	1	D	MNG	250n	375n*	462m	5.0	12	.80	2.4§	3.2m	.40	500 Δ	0	7	A264a	ML132
7	AM90L60DDC	4096	1	D	MNG	250nØ	430n*	396m	5.0	12	.80	2.4	3.2m	.40		0	7	A483	ML154
8	AM90L60DPC	4096	1	D	MNG	250nØ	430n*	396m	5.0	12	.80	2.4	3.2m	.40		0	7	A483	ML197c
9	AM9050DDC	4096	1	D	MNG	250nØ	430n*	750m	5.0	12	.80	2.4	5.0m	.40		0	7	A483a	ML194f
10	AM9050DPC	4096	1	D	MNG	250nØ	430n*	750m	5.0	12	.80	2.4	5.0m	.40		0	7	A483a	ML3I
11	AM9060DDC	4096	1	D	MNG	250nØ	430n*	750m	5.0	12	.80	2.4	3.2m	.40		0	7	A483	ML154
12	AM9060DPC	4096	1	D	MNG	250nØ	430n*	750m	5.0	12	.80	2.4	3.2m	.40		0	7	A483	ML197c
13	D2104A-3	4096	1	D	MNG	250n	375n*	360m	5.0	12	.80	2.4§	3.2m	.40	500 Δ	0	7	A191a	ML359
14	D2107C	4096	1	D	MNG	250n	430n*	360m	5.0	12	.80	2.4	3.2m	.40	500 Δ	0	7	A189a	ML359c
15	IM7027-4CJE	4096	1	D	MNG	250n	480 *Δ	470m	5.0	12	.80	2.2§	10uΔ			0	7	A324	ML396
16#	ITT4027-4D	4096	1	D	MNG	250n	480nΔ*	1.0 ☑	5.0	12	.80	2.2§	3.2m	.40	500 Δ	0	7	PN16j	ML127f
17	ITT4027-4N	4096	1	D	MNG	250n		1.0 ☑	5.0	12	.80	2.2§	3.2m	.40	500 Δ	0	7	PN16j	ML170
18#	M4027P-4B1	4096	1	D	MNG	250n	375n*	470m	5.0	12	.80	2.2§	3.2m	.40	500	0	7	A264	ML301
19#	M4027P-4D1	4096	1	D	MNG	250n	375n*	470m	5.0	12	.80	2.2§	3.2m	.40	500	0	7	A264	ML302
20#	M4027P-4F1	4096	1	D	MNG	250n	375n*	470m	5.0	12	.80	2.2§	3.2m	.40	500	0	7	A264	ML300
21	MCM4027AC4	4096	1	D	MNG	250n	375n*	470m	5.0	12	.80	2.2§	3.2m	.40	500 Δ	0	7	A264	ML372
22	MCM4027C4	4096	1	D	MNG	250n	480nΔ	470m	5.0	12	.80	2.2§	3.2m	.40	500 Δ	0	7	A264	ML157a
23	MCM4027L4	4096	1	D	MNG	250n	480nΔ	470m	5.0	12	.80	2.2§	3.2m	.40	500 Δ	0	7	A264	ML98b
24	MCM4027P4	4096	1	D	MNG	250n	375n	470mt	5.0	12	.80	2.4§	3.2m	.40	500 Δ	0	7	A264	ML98b
25	MCM4096C6	4096	1	D	MNG	250n	375n*	500mt	5.0	12	.80	2.4§	3.2m	.40	500 Δ	0	7	A264	ML372
26	MCM4096L6	4096	1	D	MNG	250n	375n*	500mt	5.0	12	.80	2.4§	3.2m	.40	500 Δ	0	7	A264	ML371
27	MCM6604AC2	4096	1	D	MNG	250n	375n*	500mt	5.0	12	.80	2.4§	2.0m	.40	500 Δ	0	7	A264	ML372
28	MCM6604AL2	4096	1	D	MNG	250n	375n*	500mt	5.0	12	.80	2.4§	2.0m	.40	500 Δ	0	7	A264	ML371
29	MK4027N-4	4096	1	D	MNG	250n	375n*	462m	5.0	12	.80	2.2§	3.2m	.40	500 Δ	0	7	A264	ML236
30	MKB4027F-84	4096	1	D	MNG	250n	375n	467m	0.0	12	.80	2.7§	10uΔ			5	8	A264	FL73
31	MKB4027J-84	4096	1	D	MNG	250n	375n	467m	0.0	12	.80	2.7§	10uΔ			5	8	A264	ML350
32	P2104A-3	4096	1	D	MNG	250n	375n	360m	5.0	12	.80	2.4§	3.2m	.40		0	7	A191a	ML361
33	P2107C	4096	1	D	MNG	250n	430n*	360m	5.0	12	.80	2.4	3.2m	.40	500 Δ	0	7	A189a	ML361b
34	MM4280J	4096	1	D	MNG	270n	470n	840mØ	5.0	12	.60	2.2	2.0m	.45	1.0kΔ	5	8	A293	ML115a
35	AM90L60CDC	4096	1	D	MNG	300nØ	470n*	396m	5.0	12	.80	2.4	3.2m	.40		0	7	A483	ML154
36	AM90L60CPC	4096	1	D	MNG	300nØ	470n*	396m	5.0	12	.80	2.4	3.2m	.40		0	7	A483	ML197c
37	AM9050CDC	4096	1	D	MNG	300nØ	470n*	750m	5.0	12	.80	2.4	5.0m	.40		0	7	A483a	ML194f
38	AM9050CPC	4096	1	D	MNG	300nØ	470n*	750m	5.0	12	.80	2.4	5.0m	.40		0	7	A483a	ML3I
39	AM9060CDC	4096	1	D	MNG	300nØ	470n*	750m	5.0	12	.80	2.4	3.2m	.40		0	7	A483	ML154
40	AM9060CPC	4096	1	D	MNG	300nØ	470n*	750m	5.0	12	.80	2.4	3.2m	.40		0	7	A483	ML197c
41	D2104A-4	4096	1	D	MNG	300n	425n*	360m	5.0	12	.80	2.4§	3.2m	.40	500 Δ	0	7	A191a	ML359
42	D2107C-4	4096	1	D	MNG	300n	470n*	360m	5.0	12	.80	2.4	3.2m	.40	500 Δ	0	7	A189a	ML359c
43	MCM4096C16	4096	1	D	MNG	300n	425n*	500mt	5.0	12	.80	2.4§	3.2m	.40	500 Δ	0	7	A264	ML372
44	MCM4096L16	4096	1	D	MNG	300n	425n*	500mt	5.0	12	.80	2.4§	3.2m	.40	500 Δ	0	7	A264	ML371
45	MCM6604AC4	4096	1	D	MNG	300n	425n*	500mt	5.0	12	.80	2.4§	2.0m	.40	500 Δ	0	7	A264	ML372
46	MCM6604AL4	4096	1	D	MNG	300n	425n*	500mt	5.0	12	.80	2.4§	2.0m	.40	500 Δ	0	7	A264	ML371
47	MCM6605AL	4096	1	D	MNG	300n	590n*	437m	5.0	12	.80	3.0§	2.0m	.45	500 Δ	0	7	A148	ML8x
48	MCM6605AP	4096	1	D	MNG	300n	590n*	437m	5.0	12	.80	3.0§	2.0m	.45	500 Δ	0	7	A148	ML212
49	P2104A-4	4096	1	D	MNG	300n	425n	360m	5.0	12	.80	2.4§	3.2m	.40		0	7	A191a	ML361
50	P2107C-4	4096	1	D	MNG	300n	470n*	360m	5.0	12	.80	2.4	3.2m	.40	500 Δ	0	7	A189a	ML361b
51	D2104A	4096	1	D	MNG	350n	500n*	420m	5.0	12	.80	2.4	2.0m	.40	500	0	7	A191a	ML359c
52#	ITT4027-6D	4096	1	D	MNG	350n	700nΔ*	1.0 ☑	5.0	12	.80	2.2§	3.2m	.40	500 Δ	0	7	PN16j	ML127f
53	ITT4027-6N	4096	1	D	MNG	350n		1.0 ☑	5.0	12	.80	2.2§	3.2m	.40	500 Δ	0	7	PN16j	ML170
54	MCM4096C11	4096	1	D	MNG	350n	500n*	500mt	5.0	12	.80	2.4§	3.2m	.40	500 Δ	0	7	A264	ML372
55	MCM4096L11	4096	1	D	MNG	350n	500n*	500mt	5.0	12	.80	2.4§	3.2m	.40	500 Δ	0	7	A264	ML371
56	MCM6604AC	4096	1	D	MNG	350n	500n*	500mt	5.0	12	.80	2.4§	2.0m	.40	500 Δ	0	7	A264	ML372
57	MCM6604AL	4096	1	D	MNG	350n	500n*	500mt	5.0	12	.80	2.4§	2.0m	.40	500 Δ	0	7	A264	ML371
58	P2104A	4096	1	D	MNG	350n	500n*	420m	5.0	12	.80	2.4	2.0m	.40	500 Δ	0	7	A191a	ML361
59	uPD411D-4	4096	1	D	MNX	135n	320n*	1.5 ☑	5.0	12	.60	2.4§	10uΔ	5.25		1	5	A443a	ML77e
60#	uPD411D-3	4096	1	D	MNX	150n	380n*	1.0 ☑	5.0	12	.60	2.4§	3.2m	.40	500 Δ	0	7	A443a	ML77e
61#	uPD411AC-2	4096	1	D	MNX	200n	400n*	1.0 ☑	5.0	12	.40	2.4	3.2m	.40	500 Δ	0	7	A444	ML363
62#	uPD411D-2	4096	1	D	MNX	200n	400n*	1.0 ☑	5.0	12	.60	2.4§	3.2m	.40	500 Δ	0	7	A443a	ML77e
63#	uPD411AC-1	4096	1	D	MNX	250n	430n*	1.0 ☑	5.0	12	.40	2.4	3.2m	.40	500 Δ	0	7	A444	ML363
64#	uPD411D-1	4096	1	D	MNX	250n	430n*	1.0 ☑	5.0	12	.60	2.4§	3.2m	.40	500 Δ	0	7	A443a	ML77e
65	JANM38510/23501BWC 4096	1	D	MNX	300n	470n*	1.5	5.5	12	.60	2.2	3.2m	.40	1.0kΔ	5	8	A202	ML254
66	JANM38510/23501CWC 4096	1	D	MNX	300n	470n*	1.5	5.5	12	.60	2.2	3.2m	.40	1.0kΔ	5	8	A202	ML254
67	JANM38510/23502BVC 4096	1	D	MNX	300n	470n*	1.5	5.5	12	.60	2.2	5.0m	.40	1.0kΔ	5	8	A204	ML255
68	JANM38510/23502CVC 4096	1	D	MNX	300n	470n*	1.5	5.5	12	.60	2.2	5.0m	.40	1.0kΔ	5	8	A204	ML255
69#	MSM3741A	4096	1	D	MNX	300n	550n*	768m	5.0	12	.60	3.0§	2.0m	.40	333 Δ	1▼	5	A347	ML8a
70#	uPD411AC	4096	1	D	MNX	300n	470n*	660m	5.0	12	.60	2.4§	3.2m	.40	500 Δ	0	7	A308	ML237
71#	uPD411D	4096	1	D	MNX	300n	470n*	1.0 ☑	5.0	12	.60	2.4§	3.2m	.40	500 Δ	0	7	A443a	ML77e
72#	MSM3741-1A	4096	1	D	MNX	330n	550n*	768m	5.0	12	.60	3.0§	2.0m	.40	333 Δ	1▼	5	A347	ML8a
73#	uPD411AC-E	4096	1	D	MNX	350n	800n*	1.0 ☑	5.0	12	.40	2.4	3.2m	.40	100 Δ	0	7	A444	ML363
74#	uPD414AC-E	4096	1	D	MNX	350n	500n*	462m	5.0	12	.80	2.4	3.2m	.40		0	7	A191	ML349
75#	MSM3741-2A	4096	1	D	MNX	380n	620n*	768m	5.0	12	.60	3.0§	2.0m	.40	333 Δ	1▼	5	A347	ML8a
76	IM7141-2CJN	4096	1	S		200n	200n*	385m	0.0	5.0	.80	2.0	3.2m	.40		0	7	A325	ML134h
77	IM7141-2MJN	4096	1	S		200n	200n*	495m	0.0	5.0	.80	2.0	3.2m	.40		5	C	A325	ML134h
78	IM7141-2MJN/B	4096	1	S		200n	200n*	495m	0.0	5.0	.80	2.0	10uΔ			5	C	A325	ML398
79	IM7141L2CJN	4096	1	S		200n	200n*	275m	0.0	5.0	.80	2.0	3.2m	.40		0	7	A325	ML134h
80	IM7141L2CPN	4096	1	S		200n	200n*	265m	0.0	5.0	.80	2.0	3.2m	.40		0	7	A325	ML165d
81	IM7141-3CJN	4096	1	S		300n	300n*	385m	0.0	5.0	.80	2.0	3.2m	.40		0	7	A325	ML134h
82	IM7141-3MJN	4096	1	S		300n	300n*	495m	0.0	5.0	.80	2.0	3.2m	.40		5	C	A325	ML134h
83	IM7141-3MJN/B	4096	1	S		300n	300n*	495m	0.0	5.0	.80	2.0	10uΔ			5	C	A325	ML398
84	IM7141L3CJN	4096	1	S		300n	300n*	275m	0.0	5.0	.80	2.0	3.2m	.40		0	7	A325	ML134h
85	IM7141L3CPN	4096	1	S		300n	300n*	265m	0.0	5.0	.80	2.0	3.2m	.40		0	7	A325	ML165d
86	IM7141CJN	4096	1	S		450n	450n*	385m	0.0	5.0	.80	2.0	3.2m	.40		0	7	A325	ML134h
87	IM7141LCJN	4096	1	S		450n	450n*	275m	0.0	5.0	.80	2.0	3.2m	.40		0	7	A325	ML134h
88	IM7141MJN	4096	1	S		450n	450n*	495m	0.0	5.0	.80	2.0	3.2m	.40		5	C	A325	ML134h
89	IM7141MJN/B	4096	1	S		450n	450n*	495m	0.0	5.0	.80	2.0	10uΔ			5	C	A325	ML398
90#	HM10470-1	4096	1	S	BEX	15n	15n$	200ut%	5.2	0.0	-1.1	-1.5	-30m☑			0	7	A319a	ML304
91#	HM10470	4096	1	S	BEX	25n	20n$	820mt	5.2	0.0	1.4	1.1				0	7	A319	ML165c
92	F10470DC	4096	1	S	BEX	30nt	25n$t	1.0	5.2	0.0	-1.4	-1.1	30m☑			0	7	A319	ML194d
93	F100470DC	4096	1	S	BEX	35n	25n$	877m	4.5	0.0	-1.4	-1.1	30m☑			0	8	A319	ML344
94	F100470FC	4096	1	S	BEX	35n	25n$	877m	4.5	0.0	-1.4	-1.1	30m☑			0	8	A319	FL67
95▼	MBM10470	4096	1	S	BEX	35n	25n$	.16m%	5.2	0.0	-1.8	-.81	-30m☑			0	7	PN18cf	ML347
96	SN54S400J	4096	1	S	BID	75ntØ	75ntØ	500mt	0.0	5.0		§				5	C	A280	ML☑
97	SN54S401J	4096	1	S	BID	75ntØ	75ntØ	500mt	0.0	5.0		Δ				5	C	A280	ML☑
98	SN74S400J	4096	1	S	BID	75ntØ	75ntØ	500mt	0.0	5.0		§				0	6	A280	ML☑
99	SN74S400N	4096	1	S	BID	75ntØ	75ntØ	500mt	0.0	5.0		§				0	6	A280	ML☑
100	SN74S401J	4096	1	S	BID	75ntØ	75ntØ	500mt	0.0	5.0		Δ				0	6	A280	ML☑
101	SN74S401N	4096	1	S	BID	75ntØ	75ntØ	500mt	0.0	5.0		Δ				0	6	A280	ML☑
102	N82S400AI	4096	1	S	BTX	45n	70n	775m	0.0	5.0	.85	2.0Δ	16m	.45		0	7	A368	ML134
103	N82S400I	4096	1	S	BTX	45n	35n$	775m	0.0	5.0	.85	2.0Δ	16m	.45		0	7	A368	ML134j
104	N82S401AI	4096	1	S	BTX	45n	70n	775m	0.0	5.0	.85	2.0§	16m	.45		0	7	A368	ML134
105	N82S401I	4096	1	S	BTX	45n	35n$	775m	0.0	5.0	.85	2.0§	16m	.45		0	7	A368	ML134j
106	93470DC	4096	1	S	BTX	55nt	30n$t	950m	0.0	5.0	.80	2.1Δ	8.0m	.45		0	7	A316	ML194d

SYMBOLS AND CODES EXPLAINED IN INTERPRETER

2. READ-WRITE MEMORIES (RAMS)

IN ORDER OF (1)No.WORDS(2)No.BITS/WORD (3)MODE(4)STRUCT.(5)MAX ACC.TIME(6)TYPE No.

LINE No.	6 TYPE No.	ORGANIZATION 1 No. WORDS	2 BITS PER WORD	3 MODE	4 STRUCTURE CODE	5 MAX ACCESS TIME (s)	MAX WRITE CYCLE TIME (s)	MAX OPER. POWER DISS. (W)	RATED POWER SUP. SPAN NEG. (V)	POS. (V)	INPUT LOGIC LEVELS MAX '0' (V)	MIN '1' (V)	MIN OUTPUT SINK CURRENT (A)	@ OUT (V)	MIN CLOCK FREQ. (Hz)	OPER. TEMP. RANGE CODE -	+	DRAWINGS LOGIC/ BLOCK	OUTLINE
1	93470DM	4096	1	S	BTX	55n†	30n$†	1.0	0.0	5.0	.80	2.1△	8.0m	.45		5	C	A316	ML194d
2	93470PC	4096	1	S	BTX	55n†	30n$†	950m	0.0	5.0	.80	2.1△	8.0m	.45		0	7	A316	ML3h
3	93471DC	4096	1	S	BTX	55n†	30n$†	950m	0.0	5.0	.80	2.1§	8.0m	.45		0	7	A316a	ML194d
4	93471DM	4096	1	S	BTX	55n†	30n$†	1.0	0.0	5.0	.80	2.1§	8.0m	.45		5	C	A316a	ML194d
5	93471PC	4096	1	S	BTX	55n†	30n$†	950m	0.0	5.0	.80	2.1§	8.0m	.45		0	7	A316a	ML3h
6	HM6504-2	4096	1	S	MCG			35m	0.0	5.0	.80	3.0				5	C	A401	
7	HM6504-5	4096	1	S	MCG			35m	0.0	5.0	.80	3.0				0	7	A401	
8	HM6504-9	4096	1	S	MCG			35m	0.0	5.0	.80	3.0				4	8	A401	
9	HM6504B2	4096	1	S	MCG			35m	0.0	5.0	.80	3.0				5	C	A401	
10	HM6504B9	4096	1	S	MCG			35m	0.0	5.0	.80	3.0				4	8	A401	
11	HM6505-2	4096	1	S	MCG			35m	0.0	5.0	.80	3.0				5	C		
12	HM6505-5	4096	1	S	MCG			35m	0.0	5.0	.80	3.0				0	7		
13	HM6505-9	4096	1	S	MCG			35m	0.0	5.0	.80	3.0				4	8		
14	HM6543-2	4096	1	S	MCG			35m	0.0	5.0	.80	3.0				5	C	A407	
15	HM6543-9	4096	1	S	MCG			35m	0.0	5.0	.80	3.0				4	8	A407	
16	HM6543C9	4096	1	S	MCG			35m	0.0	5.0	.80	3.0				4	8	A407	
17	2147-3	4096	1	S	MCG☑	55n	55n*	2.0m♦	0.0	5.0	.80	2.0§	50u△			0	7	A507	ML398
18	IM6504IDN	4096	1	S	MCG☑	170n†	240n†	1.0ut♦	0.0	5.0	.80	3.0§	1.0u△			4	8	A506	ML397
19	IM6504IJN	4096	1	S	MCG☑	170n†	240n†	1.0ut♦	0.0	5.0	.80	3.0§	1.0u△			4	8	A506	ML398
20	IM6504IPN	4096	1	S	MCG☑	170n†	240n†	1.0ut♦	0.0	5.0	.80	3.0§	1.0u△			4	8	A506	ML402
21	IM6504MDN	4096	1	S	MCG☑	170n†	240n†	1.0ut♦	0.0	5.0	.80	3.0§	1.0u△			5	C	A506	ML397
22	IM6504MFN	4096	1	S	MCG☑	170n†	240n†	1.0ut♦	0.0	5.0	.80	3.0§	1.0u△			5	C	A506	FL77
23	IM6504MJN	4096	1	S	MCG☑	170n†	240n†	1.0ut♦	0.0	5.0	.80	3.0§	1.0u△			5	C	A506	ML398
24▼	TC5504AD-2	4096	1	S	MCG	200n	300n	27m	0.0	5.0	.80	2.2	2.0m	.40		3	8	A542	ML344
25▼	TC5504ADL-2	4096	1	S	MCG	200n	300n	27m	0.0	5.0	.80	2.2	2.0m	.40		3	8		ML344
26▼	TC5504AP-2	4096	1	S	MCG	200n	300n	27m	0.0	5.0	.80	2.2	2.0m	.40		3	8	A542	ML165c
27▼	TC5504APL-2	4096	1	S	MCG	200n	300n	27m	0.0	5.0	.80	2.2	2.0m	.40		3	8		ML165c
28▼	MB8404E	4096	1	S	MCG	250n	370n*	275u♦	0.0	5.0	0.8	2.2§	1.0u△			4	8	PN18ce	ML347
29	NMC6504J-2	4096	1	S	MCG	300n	420n	250u♦	0.0	5.0	.80	3.0§	3.2m	.40		5	C	A477	ML194e
30	NMC6504J-9	4096	1	S	MCG	300n	420n	250u♦	0.0	5.0	.80	3.0§	3.2m	.40		4	8	A477	ML196
31	NMC6504N-9	4096	1	S	MCG	300n	420n	250u♦	0.0	5.0	.80	3.0§	3.2m	.40		4	8	A477	ML196
32▼	TC5504AD-3	4096	1	S	MCG	300n	420n	27m	0.0	5.0	.80	2.2	2.0m	.40		3	8	A542	ML344
33▼	TC5504ADL-3	4096	1	S	MCG	300n	420n	27m	0.0	5.0	.80	2.2	2.0m	.40		3	8		ML344
34▼	TC5504AP-3	4096	1	S	MCG	300n	420n	27m	0.0	5.0	.80	2.2	2.0m	.40		3	8	A542	ML165c2
35▼	TC5504APL-3	4096	1	S	MCG	300n	420n	27m	0.0	5.0	.80	2.2	2.0m	.40		3	8		ML165c
36	NMC6504J-5	4096	1	S	MCG	350n	500n	250u♦	0.0	5.0	.80	3.0§	3.2m	.40		0	7	A477	ML194e
37	NMC6504N-5	4096	1	S	MCG	350n	500n	250n♦	0.0	5.0	.80	3.0§	3.2m	.40		0	7	A477	ML196
38	MCM146504	4096	1	S	MCG	450n		10m♦†	0.0	5.0	.80	3.0§						A416	ML☑
39♦	TC5504P	4096	1	S	MCG	450n	550n*	110m	0.0	5.0	0.8	2.5	2.0m	0.4		3	8	A520a	ML165c
40▼	TC5504PL	4096	1	S	MCG	450n	550n	110m	0.0	5.0	.80	2.5	2.0m	.40		3	8		ML165c
41	TC5504P-1	4096	1	S	MCG	550n	700n*	110m	0.0	5.0	0.8	2.5	2.0m	0.4		3	8	A520a	ML3j
42▼	TC5504PL-1	4096	1	S	MCG	550n	700n	110m	0.0	5.0	.80	2.5	2.0m	.40		3	8		ML165c
43♦	TC5504P-2	4096	1	S	MCG	800n	1.0u*	110m	0.0	5.0	0.8	2.5	2.0m	0.4		3	8	A520a	ML165c
44▼	TC5504PL-2	4096	1	S	MCG	800n	1.0u	110m	0.0	5.0	.80	2.5	2.0m	.40		3	8		ML165c
45▼#	HM6147-3	4096	1	S	MCX	70n	70n*	1.0	0.0	5.0	.80	2.2	12m	.40		0	7	A507	
46	MK2147J-55	4096	1	S	MN☑	55n	55n	900m	0.0	5.0	.80	2.0§	50u△			0	7	PN18w	ML351
47	MK2147J-70	4096	1	S	MN☑	70n	70n	800m	0.0	5.0	.80	2.0§	50u△			0	7	PN18w	ML351
48	MK2147J-90	4096	1	S	MN☑	90n	90n	800m	0.0	5.0	.80	2.0§	50u△			0	7	PN18w	ML351
49	AM91L41DDC	4096	1	S	MNG		395n△*	368m	0.0	5.0	.80	2.0				0	7		
50▼	D2147H1	4096	1	S	MNG	35n	35n*	1.2 ☑	0.0	5.0	.80	2.0§	50u△	4.5		0	7	A488	ML359a
51▼	D2147H2	4096	1	S	MNG	45n	45n*	1.2 ☑	0.0	5.0	.80	2.0§	50u△	4.5		0	7	A325	ML359a
52▼	D2147H3	4096	1	S	MNG	55n	55n*	1.2 ☑	0.0	5.0	.80	2.0§	50u△	4.5		0	7	A488	ML359a
53#	HM6147LP	4096	1	S	MNG	55n	55n	1.0	0.0	5.0	.80	2.2§	2.0u△			0	7	A507	ML☑
54#	HM6147P	4096	1	S	MNG	55n	55n	1.0	0.0	5.0	.80	2.2§	2.0u△			0	7	A507	ML☑
55	MCM2147C55	4096	1	S	MNG	55n	55n*	850mØ	0.0	5.0	.80	2.0§	8.0m	.40		0	7	A418	ML☑
56	MCM2147P55	4096	1	S	MNG	55n	55n*	850mØ	0.0	5.0	.80	2.0§	8.0m	.40		0	7	A418	ML265
57▼	MD2147H3	4096	1	S	MNG	55n	55n*	1.2 ☑	0.0	5.0	.80	2.0§	50u△	4.5		5	C	A325	ML359a
58▼	MK4147N-55	4096	1	S	MNG	55n	55n*	500m	0.0	5.0	.80	2.0	50u△	4.5		0	7	PN18w	ML353
59	MM2147J-3	4096	1	S	MNG	55n	55n	900m	0.0	5.0	.80	2.0	8.0m	.40		0	7	A507	ML194e
60	MM2147N-3	4096	1	S	MNG	55n	55n	900m	0.0	5.0	.80	2.0	8.0m	.40		0	7	A507	ML196
61	SYC2147-3	4096	1	S	MNG	55n	55n	900m	0.0	5.0	.80	2.0§	50u△	4.5		0	7	A497	ML115e
62	TMM315D-1	4096	1	S	MNG	55n	55n*	990m	0.0	5.0	0.8	2.0	8.0m	0.4		0	7	A507	ML344
63	TMS2147-5NL	4096	1	S	MNG	55n	55n	1.2	0.0	5.0	.80	2.0§	50u			0	7	A452	ML305
64	D2147H	4096	1	S	MNG	70n	70n*	1.2 ☑	0.0	5.0	.80	2.0§	50u△	4.5		0	7	A325	ML359a
65	D2147HL	4096	1	S	MNG	70n	70n*	1.2 ☑	0.0	5.0	.80	2.0§	50u△	4.5		0	7	A325	ML359a
66#	HM6147LP-3	4096	1	S	MNG	70n	70n	1.0	0.0	5.0	.80	2.2§	2.0u△			0	7	A507	ML☑
67#	HM6147P-3	4096	1	S	MNG	70n	70n	1.0	0.0	5.0	.80	2.2§	2.0u△			0	7	A507	ML☑
68	MCM2147C70	4096	1	S	MNG	70n	70n*	750mØ	0.0	5.0	.80	2.0§	8.0m	.40		0	7	A418	ML☑
69	MCM2147P70	4096	1	S	MNG	70n	70n*	750mØ	0.0	5.0	.80	2.0§	8.0m	.40		0	7	A418	ML265
70▼	MD2147H	4096	1	S	MNG	70n	70n*	1.2 ☑	0.0	5.0	.80	2.0§	50u△	4.5		5	C	A325	ML359a
71▼	MK4147J-70	4096	1	S	MNG	70n	70n*	500m	0.0	5.0	.80	2.0	50u△	4.5		0	7	PN18w	ML351
72▼	MK4147N-70	4096	1	S	MNG	70n	70n*	500m	0.0	5.0	.80	2.0	50u△	4.5		0	7	PN18w	ML353
73	MM2147J	4096	1	S	MNG	70n	70n	800m	0.0	5.0	.80	2.0	8.0m	.40		0	7	A507	ML194e
74	MM2147J-L	4096	1	S	MNG	70n	70n	720m	0.0	5.0	.80	2.0	8.0m	.40		0	7	A507	ML194e
75	MM2147N	4096	1	S	MNG	70n	70n	800m	0.0	5.0	.80	2.0	8.0m	.40		0	7	A507	ML196
76	MM2147N-L	4096	1	S	MNG	70n	70n	720m	0.0	5.0	.80	2.0	8.0m	.40		0	7	A507	ML196
77	SYC2147	4096	1	S	MNG	70n	70n	800m	0.0	5.0	.80	2.0§	50u△	4.5		0	7	A497	ML115e
78	SYC2147L	4096	1	S	MNG	70n	70n	700m	0.0	5.0	.80	2.0§	50u△	4.5		0	7	A497	ML115e
79	TMM315D	4096	1	S	MNG	70n	70n*	880m	0.0	5.0	0.8	2.0	8.0m	0.4		0	7	A507	ML344
80	TMS21L47-7NL	4096	1	S	MNG	70n	70n	1.2	0.0	5.0	.80	2.0§	50u			0	7	A452	ML305
81	TMS2147-7NL	4096	1	S	MNG	70n	70n	1.2	0.0	5.0	.80	2.0§	50u			0	7	A452	ML305
82	MCM2147C85	4096	1	S	MNG	85n	85n*	650mØ	0.0	5.0	.80	2.0§	8.0m	.40		0	7	A418	ML271
83	MCM2147P85	4096	1	S	MNG	85n	85n*	650mØ	0.0	5.0	.80	2.0§	8.0m	.40		0	7	A418	ML265
84▼	MK4147J-85	4096	1	S	MNG	85n	85n*	500m	0.0	5.0	.80	2.0	50u△	4.5		0	7,	PN18w	ML351
85▼	MK4147N-85	4096	1	S	MNG	85n	85n*	500m	0.0	5.0	.80	2.0	50u△	4.5		0	7	PN18w	ML353
86	uPD410D-3	4096	1	S	MNG	90n	220n*	1.0 ☑	5.0	12	.60	2.4§	10u△	5.25		0	7	A443a	ML77e
87	MCM2147C100	4096	1	S	MNG	100n	100n*	550mØ	0.0	5.0	.80	2.0§	8.0m	.40		0	7	A418	ML271
88	MCM2147P100	4096	1	S	MNG	100n	100n*	550mØ	0.0	5.0	.80	2.0§	8.0m	.40		0	7	A418	ML265
89	2141-UCB	4096	1	S	MNG	120n	120n		0.0	5.0								A507	ML382
90	2141-UCE	4096	1	S	MNG	120n	120n		0.0	5.0								A507	ML382
91	NMC2141J	4096	1	S	MNG	120n	120n*	1.2 ☑	0.0	5.0	.80	2.0§	8.0m	.40		0	7	A507	ML☑
92	NMC2141N	4096	1	S	MNG	120n	120n*	1.2 ☑	0.0	5.0	.80	2.0§	8.0m	.40		0	7	A507	ML☑
93	NMC5257AJ	4096	1	S	MNG	120n	120n*	1.2 ☑	0.0	5.0	.80	2.0§	8.0m	.40		0	7	A507	ML☑
94	NMC5257AN	4096	1	S	MNG	120n	120n*	1.2 ☑	0.0	5.0	.80	2.0§	8.0m	.40		0	7	A507	ML☑
95▼	P2141-4	4096	1	S	MNG	120n	120n*	1.2 ☑	0.0	5.0	.80	2.0§	10u△	4.5		0	7	A325	ML361a
96	TMS4244JL	4096	1	S	MNG	120n	120n*	300m†	0.0	5.0	.80	2.0				0	7	PN18i	ML3b
97	TMS4244NL	4096	1	S	MNG	120n	120n*	300m†	0.0	5.0	.80	2.0				0	7	PN18i	ML3k
98#	2613-15F	4096	1	S	MNG	150n	150n*	700m	0.0	5.0	.80	2.0§	2.1m	.45		0	7	A418	ML165a
99#	2613-15I	4096	1	S	MNG	150n	150n*	700m	0.0	5.0	.80	2.0§	2.1m	.45		0	7	A418	ML134j
100#	2613-15N	4096	1	S	MNG	150n	150n*	700m	0.0	5.0	.80	2.0§	2.1m	.45		0	7	A418	ML291
101▼	P2141-3	4096	1	S	MNG	150n	150n*	1.2 ☑	0.0	5.0	.80	2.0§	10u△	4.5		0	7	A325	ML361a
102▼	P2141L3	4096	1	S	MNG	150n	150n*	1.2 ☑	0.0	5.0	.80	2.0§	10u△	4.5		0	7	A325	ML361a
103	TMS40L44-15NL	4096	1	S	MNG	150n	150n	275m	0.0	5.0	.80	2.0§	3.2m	.40		0	7	A327	ML3b
104	TMS4044-15NL	4096	1	S	MNG	150n	150n*	440m	0.0	5.0	.80	2.0§	3.2m	.40		0	7	A327	ML3k
105	uPD4104C-3	4096	1	S	MNG	150n	260n*	1.0 ☑	0.0	5.0	.80	2.2	10u△	5.5		0	7	A443b	ML368
106	uPD4104D-3	4096	1	S	MNG	150n	260n*	1.0 ☑	0.0	5.0	.80	2.2	10u△	5.5		0	7	A443b	ML226c
107	Z6104-2CS	4096	1	S	MNG	150n	240n*		0.0	5.0	-.30*	2.0				0	7	A526	ML327
108	Z6104-2PS	4096	1	S	MNG	150n	240n*		0.0	5.0	-.30*	2.0				0	7	A526	ML327
109#	2613-20F	4096	1	S	MNG	200n	200n*	700m	0.0	5.0	.80	2.0§	2.1m	.45		0	7	A418	ML165a
110#	2613-20I	4096	1	S	MNG	200n	200n*	700m	0.0	5.0	.80	2.0§	2.1m	.45		0	7	A418	ML134j

SYMBOLS AND CODES EXPLAINED IN INTERPRETER

2. READ-WRITE MEMORIES (RAMS)

IN ORDER OF (1)No.WORDS(2)No.BITS/WORD (3)MODE(4)STRUCT.(5)MAX ACC.TIME(6)TYPE No.

LINE No.	6 TYPE No.	ORGANIZATION 1 No. WORDS	2 BITS PER WORD	3 MODE	4 STRUCTURE CODE	5 MAX ACCESS TIME (s)	MAX WRITE CYCLE TIME (s)	MAX OPER. POWER DISS. (W)	RATED POWER SUP. SPAN NEG. (V)	POS. (V)	INPUT LOGIC LEVELS MAX '0' (V)	MIN '1' (V)	MIN OUTPUT SINK CURRENT (A)	@ OUT (V)	MIN CLOCK FREQ. (Hz)	OPER. TEMP. RANGE CODE -	+	DRAWINGS LOGIC/ BLOCK	OUTLINE
1#	2613-20N	4096	1	S	MNG	200n	200n*	700m	0.0	5.0	.80	2.0§	2.1m	.45		0	7	A418	ML291
2#	M5T4044P-20	4096	1	S	MNG	200n	200n	358m	0.0	5.0	.80	2.0	2.1m	.40		0	7	A327	ML338
3#	M5T4044S-20	4096	1	S	MNG	200n	200n	358m	0.0	5.0	.80	2.0	2.1m	.40		0	7	A327	ML337
4	MCM66L41-20C	4096	1	S	MNG	200n	200n*	385m	0.0	5.0	.80	2.0§	2.1m	.40		0	7	A327b	ML271
5	MCM66L41-20JL	4096	1	S	MNG	200n	200n*	350m	0.0	5.0	.80	2.0§	2.1m	.40		0	7	A327b	ML370
6	MCM66L41-20NL	4096	1	S	MNG	200n	200n*	350m	0.0	5.0	.80	2.0§	2.1m	.40		0	7	A327b	ML370
7	MCM66L41-20P	4096	1	S	MNG	200n	200n*	385m	0.0	5.0	.80	2.0§	2.1m	.40		0	7	A327b	ML265
8	MCM6641-20C	4096	1	S	MNG	200n	200n*	550m	0.0	5.0	.80	2.0§	2.1m	.40		0	7	A327b	ML271
9	MCM6641-20JL	4096	1	S	MNG	200n	200n*	500m	0.0	5.0	.80	2.0§	2.1m	.40		0	7	A327b	ML370
10	MCM6641-20NL	4096	1	S	MNG	200n	200n*	500m	0.0	5.0	.80	2.0§	2.1m	.40		0	7	A327b	ML370
11	MCM6641-20P	4096	1	S	MNG	200n	200n*	550m	0.0	5.0	.80	2.0§	2.1m	.40		0	7	A327b	ML265
12	MK4104J-3	4096	1	S	MNG	200n	310n	150m	0.0	5.0	.80	2.2	5.0m	.40		0	7	A303	ML351
13	MK4104J-33	4096	1	S	MNG	200n	310n	150m	0.0	5.0	.80	2.2	5.0m	.40		0	7	A303	ML351
14	MK4104N-3	4096	1	S	MNG	200n	310n	150m	0.0	5.0	.80	2.2	5.0m	.40		0	7	A303	ML353
15	MK4104N-33	4096	1	S	MNG	200n	310n	150m	0.0	5.0	.80	2.2	5.0m	.40		0	7	A303	ML353
16	MK4104P-3	4096	1	S	MNG	200n	310n	150m	0.0	5.0	.80	2.2	5.0m	.40		0	7	A303	ML352
17	MK4104P-33	4096	1	S	MNG	200n	310n	150m	0.0	5.0	.80	2.2	5.0m	.40		0	7	A303	ML352
18	MM5257J-2	4096	1	S	MNG	200n	200n	450m	0.0	5.0	.80	2.0§	2.1m	.40		0	7	A348	ML194e
19	MM5257J-2L	4096	1	S	MNG	200n	200n	400m	0.0	5.0	.80	2.0§	2.1m	.40		0	7	A348	ML194e
20	MM5257N-2	4096	1	S	MNG	200n	200n	450m	0.0	5.0	.80	2.0§	2.1m	.40		0	7	A348	ML196
21	MM5257N-2L	4096	1	S	MNG	200n	200n	400m	0.0	5.0	.80	2.0§	2.1m	.40		0	7	A348	ML196
22▼	P2141L4	4096	1	S	MNG	200n	200n*	1.2 ☑	0.0	5.0	.80	2.0§	10uΔ	4.5		0	7	A325	ML361a
23	TMS40L44-20NL	4096	1	S	MNG	200n	200n*	275m	0.0	5.0	.80	2.0§	3.2m	.40		0	7	A327	ML3k
24	TMS4044-20NL	4096	1	S	MNG	200n	200n*	440m	0.0	5.0	.80	2.0§	3.2m	.40		0	7	A327	ML3k
25	Z6104-3CS	4096	1	S	MNG	200n	320n*		0.0	5.0	-.30*	2.0				0	7	A526	ML327
26	Z6104-3PS	4096	1	S	MNG	200n	320n*		0.0	5.0	-.30*	2.0				0	7	A526	ML327
27#	2613-25F	4096	1	S	MNG	250n	250n*	700m	0.0	5.0	.80	2.0§	2.1m	.45		0	7	A418	ML165a
28#	2613-25I	4096	1	S	MNG	250n	250n*	700m	0.0	5.0	.80	2.0§	2.1m	.45		0	7	A418	ML134j
29#	2613-25N	4096	1	S	MNG	250n	250n*	700m	0.0	5.0	.80	2.0§	2.1m	.45		0	7	A418	ML291
30	MCM66L41-25C	4096	1	S	MNG	250n	250n*	385m	0.0	5.0	.80	2.0§	2.1m	.40		0	7	A327b	ML271
31	MCM66L41-25JL	4096	1	S	MNG	250n	250n*	350m	0.0	5.0	.80	2.0§	2.1m	.40		0	7	A327b	ML370
32	MCM66L41-25NL	4096	1	S	MNG	250n	250n*	350m	0.0	5.0	.80	2.0§	2.1m	.40		0	7	A327b	ML370
33	MCM66L41-25P	4096	1	S	MNG	250n	250n*	385m	0.0	5.0	.80	2.0§	2.1m	.40		0	7	A327b	ML265
34	MCM6641-25C	4096	1	S	MNG	250n	250n*	550m	0.0	5.0	.80	2.0§	2.1m	.40		0	7	A327b	ML271
35	MCM6641-25JL	4096	1	S	MNG	250n	250n*	500m	0.0	5.0	.80	2.0§	2.1m	.40		0	7	A327b	ML370
36	MCM6641-25NL	4096	1	S	MNG	250n	250n*	500m	0.0	5.0	.80	2.0§	2.1m	.40		0	7	A327b	ML370
37	MCM6641-25P	4096	1	S	MNG	250n	250n*	550m	0.0	5.0	.80	2.0§	2.1m	.40		0	7	A327b	ML265
38	MK4104J-4	4096	1	S	MNG	250n	385n	150m	0.0	5.0	.80	2.2	5.0m	.40		0	7	A303	ML351
39	MK4104J-34	4096	1	S	MNG	250n	385n	150m	0.0	5.0	.80	2.2	5.0m	.40		0	7	A303	ML351
40	MK4104N-4	4096	1	S	MNG	250n	385n	150m	0.0	5.0	.80	2.2	5.0m	.40		0	7	A303	ML353
41	MK4104N-34	4096	1	S	MNG	250n	385n	150m	0.0	5.0	.80	2.2	5.0m	.40		0	7	A303	ML353
42	MK4104P-4	4096	1	S	MNG	250n	385n	150m	0.0	5.0	.80	2.2	5.0m	.40		0	7	A303	ML352
43	MK4104P-34	4096	1	S	MNG	250n	385n	150m	0.0	5.0	.80	2.2	5.0m	.40		0	7	A303	ML352
44▼	P2141-5	4096	1	S	MNG	250n	250n*	1.2 ☑	0.0	5.0	.80	2.0§	10uΔ	4.5		0	7	A325	ML361a
45▼	P2141L5	4096	1	S	MNG	250n	250n*	1.2 ☑	0.0	5.0	.80	2.0§	10uΔ	4.5		0	7	A325	ML361a
46	TMS40L44-25NL	4096	1	S	MNG	250n	250n*	275m	0.0	5.0	.80	2.0§	3.2m	.40		0	7	A327	ML3k
47	TMS4044-25NL	4096	1	S	MNG	250n	250n*	440m	0.0	5.0	.80	2.0§	3.2m	.40		0	7	A327	ML3k
48	Z6104-4CS	4096	1	S	MNG	250n	380n*		0.0	5.0	-.30*	2.0				0	7	A526	ML327
49♦	Z6104-4PS	4096	1	S	MNG	250n	380n*		0.0	5.0	-.30*	2.0				0	7	A526	ML327
50▼	Z6104L-4CS	4096	1	S	MNG	250n	380n*		0.0	5.0	-.3*	2.0				0	7	A526	ML327
51	Z6104L-4PS	4096	1	S	MNG	250n	380n*		0.0	5.0	-.30*	2.0				0	7	A526	ML327
52#	M5T4044P-30	4096	1	S	MNG	300n	300n	358m	0.0	5.0	.80	2.0	2.1m	.40		0	7	A327	ML338
53#	M5T4044S-30	4096	1	S	MNG	300n	300n	358m	0.0	5.0	.80	2.0	2.1m	.40		0	7	A327	ML337
54	MCM66L41-30C	4096	1	S	MNG	300n	300n*	385m	0.0	5.0	.80	2.0§	2.1m	.40		0	7	A327b	ML271
55	MCM66L41-30JL	4096	1	S	MNG	300n	300n*	350m	0.0	5.0	.80	2.0§	2.1m	.40		0	7	A327b	ML370
56	MCM66L41-30NL	4096	1	S	MNG	300n	300n*	350m	0.0	5.0	.80	2.0§	2.1m	.40		0	7	A327b	ML370
57	MCM66L41-30P	4096	1	S	MNG	300n	300n*	385m	0.0	5.0	.80	2.0§	2.1m	.40		0	7	A327b	ML265
58	MCM6641-30C	4096	1	S	MNG	300n	300n*	550m	0.0	5.0	.80	2.0§	2.1m	.40		0	7	A327b	ML271
59	MCM6641-30JL	4096	1	S	MNG	300n	300n*	500m	0.0	5.0	.80	2.0§	2.1m	.40		0	7	A327b	ML370
60	MCM6641-30NL	4096	1	S	MNG	300n	300n*	500m	0.0	5.0	.80	2.0§	2.1m	.40		0	7	A327b	ML370
61	MCM6641-30P	4096	1	S	MNG	300n	300n*	550m	0.0	5.0	.80	2.0§	2.1m	.40		0	7	A327b	ML265
62	MK4104J-5	4096	1	S	MNG	300n	460n	150m	0.0	5.0	.80	2.2	5.0m	.40		0	7	A303	ML351
63	MK4104J-35	4096	1	S	MNG	300n	460n	150m	0.0	5.0	.80	2.2	5.0m	.40		0	7	A303	ML351
64	MK4104N-5	4096	1	S	MNG	300n	460n	150m	0.0	5.0	.80	2.2	5.0m	.40		0	7	A303	ML353
65	MK4104N-35	4096	1	S	MNG	300n	460n	150m	0.0	5.0	.80	2.2	5.0m	.40		0	7	A303	ML353
66	MK4104P-5	4096	1	S	MNG	300n	460n	150m	0.0	5.0	.80	2.2	5.0m	.40		0	7	A303	ML352
67	MK4104P-35	4096	1	S	MNG	300n	460n	150m	0.0	5.0	.80	2.2	5.0m	.40		0	7	A303	ML352
68♦	MKB4104E-85	4096	1	S	MNG	300n	510n*	1.0 ☑	0.0	5.0	.65	2.4	10uΔ			5	C	A303	LC18a
69	MKB4104J-85	4096	1	S	MNG	300n	510n*	1.0 ☑	0.0	5.0	.65	2.4	10uΔ			5	C	A303	ML351
70	MKB4104P-85	4096	1	S	MNG	300n	510n*	1.0 ☑	0.0	5.0	.65	2.4	10uΔ			5	C	A303	ML353
71	MM5257J-3	4096	1	S	MNG	300n	300n	450m	0.0	5.0	.80	2.0§	2.1m	.40		0	7	A348	ML194e
72	MM5257J-3L	4096	1	S	MNG	300n	300n	400m	0.0	5.0	.80	2.0§	2.1m	.40		0	7	A348	ML194e
73	MM5257N-3	4096	1	S	MNG	300n	300n	450m	0.0	5.0	.80	2.0§	2.1m	.40		0	7	A348	ML196
74	MM5257N-3L	4096	1	S	MNG	300n	300n	400m	0.0	5.0	.80	2.0§	2.1m	.40		0	7	A348	ML196
75	MK4104J-6	4096	1	S	MNG	350n	535n	150m	0.0	5.0	.80	2.2	5.0m	.40		0	7	A303	ML351
76	MK4104N-6	4096	1	S	MNG	350n	535n	150m	0.0	5.0	.80	2.2	5.0m	.40		0	7	A303	ML353
77	MK4104P-6	4096	1	S	MNG	350n	565n	150m	0.0	5.0	.80	2.2	5.0m	.40		0	7	A303	ML352
78	MKB4104E-86	4096	1	S	MNG	350n	610n*	1.0 ☑	0.0	5.0	.65	2.4	10uΔ			5	C	A303	FL74
79	MKB4104J-86	4096	1	S	MNG	350n	610n*	1.0 ☑	0.0	5.0	.65	2.4	10uΔ			5	C	A303	MC351
80	MKB4104P-86	4096	1	S	MNG	350n	610n*	1.0 ☑	0.0	5.0	.65	2.4	10uΔ			5	C	A303	ML353
81#	2613-45F	4096	1	S	MNG	450n	450n*	700m	0.0	5.0	.80	2.0§	2.1m	.45		0	7	A418	ML165a
82#	2613-45I	4096	1	S	MNG	450n	450n*	700m	0.0	5.0	.80	2.0§	2.1m	.45		0	7	A418	ML134j
83#	2613-45N	4096	1	S	MNG	450n	450n*	700m	0.0	5.0	.80	2.0§	2.1m	.45		0	7	A418	ML291
84#	HM4315P	4096	1	S	MNG	450n	640n	1.0	0.0	5.0	.80	2.4	1.0uΔ			0	7	A490	ML☑
85#	M5T4044P-45	4096	1	S	MNG	450n	450n	358m	0.0	5.0	.80	2.0	2.1m	.40		0	7	A327	ML338
86#	M5T4044S-45	4096	1	S	MNG	450n	450n	358m	0.0	5.0	.80	2.0	2.1m	.40		0	7	A327	ML337
87	MCM66L41-45C	4096	1	S	MNG	450n	450n*	385m	0.0	5.0	.80	2.0§	2.1m	.40		0	7	A327b	ML271
88	MCM66L41-45JL	4096	1	S	MNG	450n	450n*	350m	0.0	5.0	.80	2.0§	2.1m	.40		0	7	A327b	ML370
89	MCM66L41-45NL	4096	1	S	MNG	450n	450n*	350m	0.0	5.0	.80	2.0§	2.1m	.40		0	7	A327b	ML370
90	MCM66L41-45P	4096	1	S	MNG	450n	450n*	385m	0.0	5.0	.80	2.0§	2.1m	.40		0	7	A327b	ML265
91	MCM6641-45C	4096	1	S	MNG	450n	450n*	550m	0.0	5.0	.80	2.0§	2.1m	.40		0	7	A327b	ML271
92	MCM6641-45JL	4096	1	S	MNG	450n	450n*	500m	0.0	5.0	.80	2.0§	2.1m	.40		0	7	A327b	ML370
93	MCM6641-45NL	4096	1	S	MNG	450n	450n*	500m	0.0	5.0	.80	2.0§	2.1m	.40		0	7	A327b	ML370
94	MCM6641-45P	4096	1	S	MNG	450n	450n*	550m	0.0	5.0	.80	2.0§	2.1m	.40		0	7	A327b	ML265
95	MM5257J	4096	1	S	MNG	450n	450n	450m	0.0	5.0	.80	2.0§	2.1m	.40		0	7	A348	ML194e
96	MM5257J-L	4096	1	S	MNG	450n	450n	400m	0.0	5.0	.80	2.0§	2.1m	.40		0	7	A348	ML194e
97	MM5257N	4096	1	S	MNG	450n	450n	450m	0.0	5.0	.80	2.0§	2.1m	.40		0	7	A348	ML196
98	MM5257N-L	4096	1	S	MNG	450n	450n	400m	0.0	5.0	.80	2.0§	2.1m	.40		0	7	A348	ML196
99	TMS40L44-45NL	4096	1	S	MNG	450n	450n*	275m	0.0	5.0	.80	2.0§	3.2m	.40		0	7	A327	ML3k
100	TMS4044-45NL	4096	1	S	MNG	450n	450n*	440m	0.0	5.0	.80	2.0§	3.2m	.40		0	7	A327	ML3k
101	MM5257J-6	4096	1	S	MNG	650n	650n	450m	0.0	5.0	.80	2.0§	2.1m	.40		0	7	A348	ML194e
102	MM5257J-6L	4096	1	S	MNG	650n	650n	400m	0.0	5.0	.80	2.0§	2.1m	.40		0	7	A348	ML194e
103	MM5257N-6	4096	1	S	MNG	650n	650n	450m	0.0	5.0	.80	2.0§	2.1m	.40		0	7	A348	ML196
104	MM5257N-6L	4096	1	S	MNG	650n	650n	400m	0.0	5.0	.80	2.0§	2.1m	.40		0	7	A348	ML196
105	uPD4104C-30	4096	1	S	MNX		460n*Δ	115m	0.0	5.0	.80	2.2				0	7		
106	uPD4104C-33	4096	1	S	MNX		260n*Δ	220m	0.0	5.0	.80	2.2				0	7		
107	uPD4104C-36	4096	1	S	MNX		180n*Δ	220m	0.0	5.0	.80	2.2				0	7		
108	uPD4104D-30	4096	1	S	MNX		460n*Δ	115m	0.0	5.0	.80	2.2				0	7		
109	uPD4104D-33	4096	1	S	MNX		260n*Δ	220m	0.0	5.0	.80	2.2				0	7		
110	uPD4104D-35	4096	1	S	MNX		230n*Δ	220m	0.0	5.0	.80	2.2				0	7		

SYMBOLS AND CODES EXPLAINED IN INTERPRETER

2. READ-WRITE MEMORIES (RAMS)

IN ORDER OF (1)No.WORDS(2)No.BITS/WORD (3)MODE(4)STRUCT.(5)MAX ACC.TIME(6)TYPE No.

LINE No.	6 TYPE No.	ORGANIZATION 1 No. WORDS	2 BITS PER WORD	3 MODE	4 STRUCTURE CODE	5 MAX ACCESS TIME (s)	MAX WRITE CYCLE TIME (s)	MAX OPER. POWER DISS. (W)	RATED POWER SUP. SPAN NEG. (V)	RATED POWER SUP. SPAN POS. (V)	INPUT LOGIC LEVELS MAX '0' (V)	INPUT LOGIC LEVELS MIN '1' (V)	MIN OUTPUT SINK CURRENT (A)	MIN OUTPUT SINK CURRENT @ OUT (V)	MIN CLOCK FREQ. (Hz)	OPER. TEMP. RANGE CODE -	OPER. TEMP. RANGE CODE +	DRAWINGS LOGIC/ BLOCK	DRAWINGS OUTLINE
1	uPD4104D-36	4096	1	S	MNX		180n*△	220m	0.0	5.0	.80	2.2				0	7		
2	uPD41046-35	4096	1	S	MNX		230n*△	220m	0.0	5.0	.80	2.2				0	7		
3	IM7147-3CJN	4096	1	S	MNX	55n	55n*	385m	0.0	5.0	0.8	2.0§	50u△	4.5		0	7	A325	ML226
4	IM7147L-3CJN	4096	1	S	MNX	55n	55n*	275m	0.0	5.0	0.8	2.0§	50u△	4.5		0	7	A325	ML226
5#	MBM2147H	4096	1	S	MNX	55n	55n	525m	0.0	5.0	.80	2.1	12m	.45		0	7	A325	ML347
6#	uPD2147D-3	4096	1	S	MNX	55n	55n*	800m	0.0	5.0	.80	2.0	10u△	5.0		0	7	A507	ML226c
7	IM7147CJN	4096	1	S	MNX	70n	70n*	385m	0.0	5.0	0.8	2.0§	50u△	4.5		0	7	A325	ML226
8	IM7147LCJN	4096	1	S	MNX	70n	70n*	275m	0.0	5.0	0.8	2.0§	50u△	4.5		0	7	A325	ML226
9#	MBM2147E	4096	1	S	MNX	70n	70n	525m	0.0	5.0	.80	2.1	12m	.45		0	7	A325	ML347
10#	uPD2147D-2	4096	1	S	MNX	70n	70n*	800m	0.0	5.0	.80	2.0	10u△	5.0		0	7	A507	ML226c
11	IM7147LM-JN	4096	1	S	MNX	85n	85n*	550m	0.0	5.0	0.8	2.0§	50u△	4.5				A325	ML226
12#	uPD410D	4096	1	S	MNX	100n	220n*	1.0 ☑	5.0	12	.60	2.4§	3.2m	.40		0	7	A443	ML77e
13	4300ACD	4096	1	S	MNX	120n	250n*	550m	5.0	12	.80	2.4§	2.0m	.50		0	7	A284a	ML229
14#	uPD2147D	4096	1	S	MNX	120n	100n*	800m	0.0	5.0	.80	2.0	8.0m	.40		1	8	A507	ML226c
15	4200BCD	4096	1	S	MNX	150n	300n*	675m	5.0	12	.70	2.4§	2.0m	.50		0	7	A284a	ML229
16	4200BCP	4096	1	S	MNX	150n	300n*	1.6 ☑	5.0	12	.70	2.4§	2.0m	.50		0	7	A284a	ML212a
17	L2141-3	4096	1	S	MNX	150n			0.0	5.0		§							
18#	uPD410D-1	4096	1	S	MNX	150n	330n*	1.0 ☑	5.0	12	.60	2.4§	3.2m	.40		0	7	A443	ML77e
19	4200ACD	4096	1	S	MNX	200n	350n*	675m	5.0	12	.70	2.4§	2.0m	.50		0	7	A284a	ML229
20	4200ACP	4096	1	S	MNX	200n	350n*	1.6 ☑	5.0	12	.70	2.4§	2.0m	.50		0	7	A284a	ML212a
21	4200USC	4096	1	S	MNX	200n	350n*	750m	5.0	12	.70	2.4§	2.0m	.50		3	8	A284b	ML162b
22	AM9044EDC	4096	1	S	MNX	200nØ	200n*	350m	0.0	5.0	.80	2.0	4.0m	.40		0	7	A418	ML194f
23	AM9044EPC	4096	1	S	MNX	200nØ	200n*	350m	0.0	5.0	.80	2.0	4.0m	.40		0	7	A418	ML3I
24	AM9140EDC	4096	1	S	MNX	200n♦	320n*	578m	0.0	5.0	.80	2.0	3.2m	.40		0	7	A486	ML162e
25	AM9140EPC	4096	1	S	MNX	200n♦	320n*	578m	0.0	5.0	.80	2.0	3.2m	.40		0	7	A486	M385
26	AM9244EDC	4096	1	S	MNX	200nØ	200n*	350m	0.0	5.0	.80	2.0	4.0m	.40		0	7	A418	ML194f
27	AM9244EPC	4096	1	S	MNX	200nØ	200n*	350m	0.0	5.0	.80	2.0	4.0m	.40		0	7	A418	ML3I
28	IM7141-2CPN	4096	1	S	MNX	200n	200n	385m	0.0	5.0	0.8	2.0§	10u△	0.4		0	7	A325	ML134c
29	L2141-4	4096	1	S	MNX	200n			0.0	5.0		§							
30	M4200USC	4096	1	S	MNX	200n	200n$	750m	0.0	12	0.7	2.4§				3	8	A284a	ML212a
31#	uPD410D-2	4096	1	S	MNX	200n	440n*	1.0 ☑	5.0	12	.60	2.4§	3.2m	.40		0	7	A443	ML77e
32▼#	uPD4104C-2	4096	1	S	MNX	200n		125m	0.0	5.0	.80	2.2§	5.0m	.40		1	8	B423	ML226c
33▼	uPD4104C-2#	4096	1	S	MNX	200n	310n*	1.0 ☑	0.0	5.0	.80	2.2	70u△	5.5		0	7	A443b	ML368
34▼#	uPD4104D-2	4096	1	S	MNX	200n		125m	0.0	5.0	.80	2.2§	5.0m	.40		1	8	B423	ML368
35	uPD4104D-2#	4096	1	S	MNX	200n	310n*	1.0 ☑	0.0	5.0	.80	2.2	10u△	5.5		0	7	A443b	ML226c
36	4200UMC	4096	1	S	MNX	250n	400n*	750m	5.0	12	.70	2.4§	2.0m	.50		5	C	A284b	ML162b
37	AM90L44DDC	4096	1	S	MNX	250nØ	250n*	250m	0.0	5.0	.80	2.0	4.0m	.40		0	7	A418	ML194f
38	AM90L44DPC	4096	1	S	MNX	250nØ	250n*	250m	0.0	5.0	.80	2.0	4.0m	.40		0	7	A418	ML3I
39	AM91L40DDC	4096	1	S	MNX	250n♦	395n*	368m	0.0	5.0	.80	2.0	3.2m	.40		0	7	A468	ML162e
40	AM91L40DPC	4096	1	S	MNX	250n♦	395n*	368m	0.0	5.0	.80	2.0	3.2m	.40		0	7	A468	M385
41	AM92L44DDC	4096	1	S	MNX	250nØ	250n*	250m	0.0	5.0	.80	2.0	4.0m	.40		0	7	A418	ML194f
42	AM9044DDC	4096	1	S	MNX	250nØ	250n*	350m	0.0	5.0	.80	2.0	4.0m	.40		0	7	A418	ML194f
43	AM9044DDM	4096	1	S	MNX	250nØ	250n*	450m	0.0	5.0	.80	2.0	4.0m	.40		5	C	A418	ML134I
44	AM9044DPC	4096	1	S	MNX	250nØ	250n*	350m	0.0	5.0	.80	2.0	4.0m	.40		0	7	A418	ML3I
45	AM9140DDC	4096	1	S	MNX	250n♦	395n*	578m	0.0	5.0	.80	2.0	3.2m	.40		0	7	A486	ML162e
46	AM9140DPC	4096	1	S	MNX	250n♦	395n*	578m	0.0	5.0	.80	2.0	3.2m	.40		0	7	A486	M385
47	AM9244DDC	4096	1	S	MNX	250nØ	250n*	350m	0.0	5.0	.80	2.0	4.0m	.40		0	7	A418	ML194f
48	AM9244DDM	4096	1	S	MNX	250nØ	250n*	450m	0.0	5.0	.80	2.0	4.0m	.40		5	C	A418	ML134I
49	AM9244DPC	4096	1	S	MNX	250nØ	250n*	350m	0.0	5.0	.80	2.0	4.0m	.40		0	7	A418	ML3I
50	L2141-5	4096	1	S	MNX	250n			0.0	5.0		§							
51	M4200-UMC	4096	1	S	MNX	250n	400n*	750m	5.0	12	.70	2.4§	2.0m	.50		5	C	A284	ML162b
52▼#	uPD4104C-1	4096	1	S	MNX	250n		105m	0.0	5.0	.80	2.2§	5.0m	.40		1	8	B423	ML226c
53	uPD4104C-1#	4096	1	S	MNX	250n	385n*	1.0 ☑	0.0	5.0	.80	2.2	10u△	5.5		0	7	A443b	ML368
54▼#	uPD4104D-1	4096	1	S	MNX	250n		105m	0.0	5.0	.80	2.2§	5.0m	.40		1	8	B423	ML368
55	uPD4104D-1#	4096	1	S	MNX	250n	385n*	1.0 ☑	0.0	5.0	.80	2.2	10u△	5.5		0	7	A443b	ML226c
56	AM90L44CDC	4096	1	S	MNX	300nØ	300n*	250m	0.0	5.0	.80	2.0	4.0m	.40		0	7	A418	ML194f
57	AM90L44CDM	4096	1	S	MNX	300nØ	300n*	300m	0.0	5.0	.80	2.0	4.0m	.40		5	C	A418	ML134I
58	AM90L44CPC	4096	1	S	MNX	300nØ	300n*	250m	0.0	5.0	.80	2.0	4.0m	.40		0	7	A418	ML3I
59	AM91L40CDC	4096	1	S	MNX	300n♦	470n*	368m	0.0	5.0	.80	2.0	3.2m	.40		0	7	A468	ML162e
60	AM91L40CDM	4096	1	S	MNX	300n♦	470n*	368m	0.0	5.0	.80	2.0	3.2m	.40		5	C	A468	ML162e
61	AM91L40CPC	4096	1	S	MNX	300n♦	470n*	368m	0.0	5.0	.80	2.0	3.2m	.40		0	7	A468	M385
62	AM92L44CDC	4096	1	S	MNX	300nØ	300n*	250m	0.0	5.0	.80	2.0	4.0m	.40		0	7	A418	ML194f
63	AM92L44CDM	4096	1	S	MNX	300nØ	300n*	300m	0.0	5.0	.80	2.0	4.0m	.40		5	C	A418	ML134I
64	AM92L44CPC	4096	1	S	MNX	300nØ	300n*	250m	0.0	5.0	.80	2.0	4.0m	.40		0	7	A418	ML3I
65	AM92L44DPC	4096	1	S	MNX	300nØ	300n*	250m	0.0	5.0	.80	2.0	4.0m	.40		0	7	A418	ML3I
66	AM9044CDC	4096	1	S	MNX	300nØ	300n*	350m	0.0	5.0	.80	2.0	4.0m	.40		0	7	A418	ML194f
67	AM9044CDM	4096	1	S	MNX	300nØ	300n*	450m	0.0	5.0	.80	2.0	4.0m	.40		5	C	A418	ML134I
68	AM9044CPC	4096	1	S	MNX	300nØ	300n*	350m	0.0	5.0	.80	2.0	4.0m	.40		0	7	A418	ML3I
69	AM9140CDC	4096	1	S	MNX	300n♦	470n*	578m	0.0	5.0	.80	2.0	3.2m	.40		0	7	A486	ML162e
70	AM9140CDM	4096	1	S	MNX	300n♦	470n*	578m	0.0	5.0	.80	2.0	3.2m	.40		5	C	A486	ML162e
71	AM9140CPC	4096	1	S	MNX	300n♦	470n*	578m	0.0	5.0	.80	2.0	3.2m	.40		0	7	A486	M385
72	AM9244CDC	4096	1	S	MNX	300nØ	300n*	350m	0.0	5.0	.80	2.0	4.0m	.40		0	7	A418	ML194f
73	AM9244CDM	4096	1	S	MNX	300nØ	300n*	450m	0.0	5.0	.80	2.0	4.0m	.40		5	C	A418	ML134I
74	AM9244CPC	4096	1	S	MNX	300nØ	300n*	350m	0.0	5.0	.80	2.0	4.0m	.40		0	7	A418	ML3I
75	IM7141-3CPN	4096	1	S	MNX	300n	300n	385m	0.0	5.0	0.8	2.0§	10u△	0.4		0	7	A325	ML134c
76▼#	uPD4104C	4096	1	S	MNX	300n		105m	0.0	5.0	.80	2.2§	5.0m	.40		1	8	B423	ML226c
77	uPD4104C#	4096	1	S	MNX	300n	460n*	1.0 ☑	0.0	5.0	.80	2.2	10u△	5.5		0	7	A443b	ML368
78▼#	uPD4104D	4096	1	S	MNX	300n		105m	0.0	5.0	.80	2.2§	5.0m	.40		1	8	B423	ML368
79	AM91L40BDC	4096	1	S	MNX	400n♦	620n*	368m	0.0	5.0	.80	2.0	3.2m	.40		0	7	A468	ML162e
80	AM91L40BDM	4096	1	S	MNX	400n♦	620n*	368m	0.0	5.0	.80	2.0	3.2m	.40		5	C	A468	ML162e
81	AM91L40BPC	4096	1	S	MNX	400n♦	620n*	368m	0.0	5.0	.80	2.0	3.2m	.40		0	7	A468	M385
82	AM9140BDC	4096	1	S	MNX	400n♦	620n*	578m	0.0	5.0	.80	2.0	3.2m	.40		0	7	A486	ML162e
83	AM9140BDM	4096	1	S	MNX	400n♦	620n*	578m	0.0	5.0	.80	2.0	3.2m	.40		5	C	A486	ML162e
84	AM9140BPC	4096	1	S	MNX	400n♦	620n*	578m	0.0	5.0	.80	2.0	3.2m	.40		0	7	A486	M385
85	AM90L44BDC	4096	1	S	MNX	450nØ	450n*	275m	5.0	5.0	.80	2.0	4.0m	.40		0	7	A418	ML134I
86	AM90L44BDM	4096	1	S	MNX	450nØ	450n*	300m	0.0	5.0	.80	2.0	4.0m	.40		5	C	A418	ML134I
87	AM90L44BPC	4096	1	S	MNX	450nØ	450n*	275m	5.0	5.0	.80	2.0	4.0m	.40		0	7	A418	ML3I
88	AM92L44BDC	4096	1	S	MNX	450nØ	450n*	250m	0.0	5.0	.80	2.0	4.0m	.40		0	7	A418	ML194f
89	AM92L44BDM	4096	1	S	MNX	450nØ	450n*	300m	0.0	5.0	.80	2.0	4.0m	.40		5	C	A418	ML134I
90	AM92L44BPC	4096	1	S	MNX	450nØ	450n*	250m	0.0	5.0	.80	2.0	4.0m	.40		0	7	A418	ML3I
91	AM9044BDC	4096	1	S	MNX	450nØ	450n*	385m	5.0	5.0	.80	2.0	4.0m	.40		0	7	A418	ML134I
92	AM9044BDM	4096	1	S	MNX	450nØ	450n*	450m	0.0	5.0	.80	2.0	4.0m	.40		5	C	A418	ML134I
93	AM9044BPC	4096	1	S	MNX	450nØ	450n*	385m	5.0	5.0	.80	2.0	4.0m	.40		0	7	A418	ML3I
94	AM9244BDC	4096	1	S	MNX	450nØ	450n*	350m	0.0	5.0	.80	2.0	4.0m	.40		0	7	A418	ML194f
95	AM9244BDM	4096	1	S	MNX	450nØ	450n*	450m	0.0	5.0	.80	2.0	4.0m	.40		5	C	A418	ML134I
96	AM9244BPC	4096	1	S	MNX	450nØ	450n*	350m	0.0	5.0	.80	2.0	4.0m	.40		0	7	A418	ML3I
97	AM91L40ADC	4096	1	S	MNX	500n♦	770n*	368m	0.0	5.0	.80	2.0	3.2m	.40		0	7	A468	ML162e
98	AM91L40ADM	4096	1	S	MNX	500n♦	700n*	368m	0.0	5.0	.80	2.0	3.2m	.40		5	C	A468	ML162e
99	AM91L40APC	4096	1	S	MNX	500n♦	770n*	368m	0.0	5.0	.80	2.0	3.2m	.40		0	7	A468	M385
100	AM9140ADC	4096	1	S	MNX	500n♦	770n*	578m	0.0	5.0	.80	2.0	3.2m	.40		0	7	A486	ML162e
101	AM9140ADM	4096	1	S	MNX	500n♦	770n*	578m	0.0	5.0	.80	2.0	3.2m	.40		5	C	A486	ML162e
102	AM9140APC	4096	1	S	MNX	500n♦	770n*	578m	0.0	5.0	.80	2.0	3.2m	.40		0	7	A486	M385
103#	MSM5104-2	4096	1	S	MXG	200n	310n*	33m	0.0	6.0	-.30	3.6				0	7	A371	ML240
104#	MSM5104-3	4096	1	S	MXG	300n	420n*	33m	0.0	6.0	-.30	3.6				0	7	A371	ML240
105	2147H-3	4096	1	S	MXX	55n	55n*	1.2 ☑	0.0	5.0	0.8	2.0§	50u△	4.5		0	7	A325	
106	2147H-4	4096	1	S	MXX	55n	55n*	1.2 ☑	0.0	5.0	0.8	2.0§	50u△	4.5		0	7	A325	
107	D2147-3	4096	1	S	MXX	55n	55n*	850m	0.0	5.0	.80	2.0§	8.0m	.40		0	7	A325	ML359a
108	2147	4096	1	S	MXX	70n	70n*	1.2 ☑	0.0	5.0	0.8	2.0§	50u△	4.5		0	7	A325	
109	2147L	4096	1	S	MXX	70n	70n*	1.2 ☑	0.0	5.0	0.8	2.0§	50u△	4.5		0	7	A325	
110	D2147	4096	1	S	MXX	70n	70n*	750m	0.0	5.0	.80	2.0§	8.0m	.40		0	7	A325	ML359a

SYMBOLS AND CODES EXPLAINED IN INTERPRETER

2. READ-WRITE MEMORIES (RAMS)

IN ORDER OF (1)No.WORDS(2)No.BITS/WORD (3)MODE(4)STRUCT.(5)MAX ACC.TIME(6)TYPE No.

LINE No.	6 TYPE No.	ORGANIZATION 1 No. WORDS	2 BITS PER WORD	3 MODE	4 STRUCTURE CODE	5 MAX ACCESS TIME (s)	MAX WRITE CYCLE TIME (s)	MAX OPER. POWER DISS. (W)	RATED POWER SUP. SPAN NEG. (V)	POS. (V)	INPUT LOGIC LEVELS MAX '0' (V)	MIN '1' (V)	MIN OUTPUT SINK CURRENT (A)	@ OUT (V)	MIN CLOCK FREQ. (Hz)	OPER. TEMP. RANGE CODE -	+	DRAWINGS LOGIC/ BLOCK	OUTLINE
1	D2147L	4096	1	S	MXX	70n	70n*	675m	0.0	5.0	.80	2.0§	8.0m	.40		0	7	A325	ML359a
2	2147-6	4096	1	S	MXX	85n	85n*	1.2 ☑	0.0	5.0	0.8	2.0§	50uΔ	4.5		0	7	A325	
3	MD2147	4096	1	S	MXX	85n	85n*	800m	0.0	5.0	.80	2.0§	5.0m	.45		6	D	A325	ML226
4	2141-2	4096	1	S	MXX	120n	120n*	1.2 ☑	0.0	5.0	0.8	2.0§	10uΔ	4.5		0	7	A325	
5	D2141-2	4096	1	S	MXX	120n	120n*	350m	0.0	5.0	.80	2.0§	4.0m	.40		0	7	A325	ML359a
6	2141-3	4096	1	S	MXX	150n	150n*	1.2 ☑	0.0	5.0	0.8	2.0§	10uΔ	4.5		0	7	A325	
7	2141L-3	4096	1	S	MXX	150n	150n*	1.2 ☑	0.0	5.0	0.8	2.0§	10uΔ	4.5		0	7	A325	
8	D2141-3	4096	1	S	MXX	150n	150n*	350m	0.0	5.0	.80	2.0§	4.0m	.40		0	7	A325	ML359a
9	D2141L-3	4096	1	S	MXX	150n	150n*	200m	0.0	5.0	.80	2.0§	4.0m	.40		0	7	A325	ML359a
10	2141-4	4096	1	S	MXX	200n	200n*	1.2 ☑	0.0	5.0	0.8	2.0§	10uΔ	4.5		0	7	A325	
11	2141L-4	4096	1	S	MXX	200n	200n*	1.2 ☑	0.0	5.0	0.8	2.0§	10uΔ	4.5		0	7	A325	
12	D2141-4	4096	1	S	MXX	200n	200n*	275m	0.0	5.0	.80	2.0§	4.0m	.40		0	7	A325	ML359a
13	D2141L-4	4096	1	S	MXX	200n	200n*	200m	0.0	5.0	.80	2.0§	4.0m	.40		0	7	A325	ML359a
14	2141-5	4096	1	S	MXX	250n	250n*	1.2 ☑	0.0	5.0	0.8	2.0§	10uΔ	4.5		0	7	A325	
15	2141L-5	4096	1	S	MXX	250n	250n*	1.2 ☑	0.0	5.0	0.8	2.0§	10uΔ	4.5		0	7	A325	
16	D2141-5	4096	1	S	MXX	250n	250n*	275m	0.0	5.0	.80	2.0§	4.0m	.40		0	7	A325	ML359a
17	D2141L-5	4096	1	S	MXX	250n	250n*	200m	0.0	5.0	.80	2.0§	4.0m	.40		0	7	A325	ML359a
18	S6504	4096	4		MCX	300n	420n	37m	4.7	5.2	0.8	2.0	2.0m	0.4		0	7		
19	Z6132-3CS	4096	8	S	MNG	200n	350n*	200m	0.0	5.0	.80	2.0	10uΔ			0	7	A502	ML393
20	Z6132-3PS	4096	8	S	MNG	200n	350n*	200m	0.0	5.0	.80	2.0	10uΔ			0	7	A502	ML199
21	Z6132-4CS	4096	8	S	MNG	250n	375n*	200m	0.0	5.0	.80	2.0	10uΔ			0	7	A502	ML393
22	Z6132-4PS	4096	8	S	MNG	250n	375n*	200m	0.0	5.0	.80	2.0	10uΔ			0	7	A502	ML199
23	Z6132-5CS	4096	8	S	MNG	300n	425n*	200m	0.0	5.0	.80	2.0	10uΔ			0	7	A502	ML393
24	Z6132-5PS	4096	8	S	MNG	300n	425n*	200m	0.0	5.0	.80	2.0	10uΔ			0	7	A502	ML199
25	TMS4108-15NL	8192	1	D	MNG	150n	375n	462m	0.0	15	.80	2.4§	50m☑			0	7	A424	ML206
26	TMS4108-20NL	8192	1	D	MNG	200n	375n	462m	0.0	15	.80	2.4§	50m☑			0	7	A424	ML206
27	TMS4108-25NL	8192	1	D	MNG	250n	410n	462m	0.0	15	.80	2.4§	50m☑			0	7	A424	ML206
28	2109-3	8192	1	D	MNX	200n	375 Δ	462m	5.0	12	0.8	2.4	10uΔ	5.5		0	7	A351	
29	C2109-3	8192	1	D	MNX	200n	375n*	462m	5.0	12	.80	2.4§	4.2m	.40	500 Δ	0	7	A351	ML358
30	2109-4	8192	1	D	MNX	250n	410 Δ	462m	5.0	12	0.8	2.4	10uΔ	5.5		0	7	A351	
31	C2109-4	8192	1	D	MNX	250n	410n*	462m	5.0	12	.80	2.4§	4.2m	.40	500 Δ	0	7	A351	ML358
32	NMC4864	8192	8	P	MXX	150n	250n*	1.3 ☑	0.0	5.0	.80	2.0§	10uΔ			0	7	A529	ML☑
33	HM6564-2	8192	8	S	MCG			300m	0.0	5.0	.80	3.0				5	C		
34	HM6564-5	8192	8	S	MCG			300M	0.0	5.0	.80	3.0				0	7		
35	HM6564-9	8192	8	S	MCG			300M	0.0	5.0	.80	3.0				4	8		
36♦	MK4516E-12	16384	1	D		120n	250n*Δ	150m	0.0	5.0	0.8	2.4	10uΔ			0	7	PN16gw	LC18c
37♦	MK4516E-15	16384	1	D		150n	310n*Δ	150m	0.0	5.0	0.8	2.4	10uΔ			0	7	PN16gw	LC18c
38	MK4516N-15	16384	1	D		150n	310n*Δ	150m	0.0	5.0	0.8	2.4	10uΔ			0	7	PN16gw	ML349
39	MK4516J-12	16384	1	D	MN☑	120n	250n	900m	0.0	5.0	.80	2.4	10uΔ	5.5		0	7	PN16gw	ML60d
40	MK4516N-12	16384	1	D	MN☑	120n	250n	900m	0.0	5.0	.80	2.4	10uΔ	5.5		0	7	PN16gw	ML349
41	MCM6616L3	16384	1	D	MNG			1.0 ☑	5.0	12	0.8	2.4§				0	6	PN16j	ML318
42	MCM6616L4	16384	1	D	MNG			1.0 ☑	5.0	12	0.8	2.4§				0	6	PN16j	ML318
43	MCM6616L5	16384	1	D	MNG			1.0 ☑	5.0	12	0.8	2.4§				0	6	PN16j	ML318
44	MCM6616P3	16384	1	D	MNG			1.0 ☑	5.0	12	0.8	2.4§				0	6	PN16j	ML145
45	MCM6616P4	16384	1	D	MNG			1.0 ☑	5.0	12	0.8	2.4§				0	6	PN16j	ML145
46	MCM6616P5	16384	1	D	MNG			1.0 ☑	5.0	12	0.8	2.4§				0	6	PN16j	ML145
47	uPD416C-5	16384	1	D	MNG		320n*Δ	462m	5.0	12	.80	2.4				0	7		
48	uPD416D-5	16384	1	D	MNG		320n*Δ	462m	5.0	12	.80	2.4				0	7		
49	NMC5295N-2	16384	1	D	MNG	80n	200n*	200m	0.0	5.0	.80	2.4§	10uΔ	5.5		0	7	A468	ML☑
50	D2118-3	16384	1	D	MNG	100n	235n*	150m	0.0	5.0	.80	2.4§	10uΔ	5.5		0	7	A469	ML359
51#	HM4816	16384	1	D	MNG	100n	200n*	1.0 ☑	0.0	5.0	.80	2.7	10uΔ	5.5	2.0nΔ	0	7	A512	ML84
52	MCM4517-10C	16384	1	D	MNG	100n	225n*	150m	0.0	5.0	.80	2.4§	10uΔ	5.5		0	7	A528	ML372
53	MCM4517-10P	16384	1	D	MNG	100n	225n*	150m	0.0	5.0	.80	2.4§	10uΔ	5.5		0	7		ML376
54	NMC5295J-3	16384	1	D	MNG	100n	235n*	200m	0.0	5.0	.80	2.4§	10uΔ	5.5		0	7	A468	ML☑
55	NMC5295N-3	16384	1	D	MNG	100n	235n*	200m	0.0	5.0	.80	2.4§	10uΔ	5.5		0	7	A468	ML☑
56	D2118-4	16384	1	D	MNG	120n	270n*	150m	0.0	5.0	.80	2.4§	10uΔ	5.5		0	7	A469	ML359
57#	HM4716A-1	16384	1	D	MNG	120n	320n*	1.0 ☑	5.0	12	.80	2.4§	10uΔ	5.5	2.0mΔ	0	7	A393	ML89h
58#	HM4716AP-1	16384	1	D	MNG	120n	320n*	1.0 ☑	5.0	12	.80	2.4§	10uΔ	5.5	2.0mΔ	0	7	A393	ML89h
59#	MB8216E	16384	1	D	MNG	120n	320n*	462m	5.0	12	.80	2.4§	4.2m	.40	500 Δ	0	7	A351	ML1p
60	MCM4516C	16384	1	D	MNG	120n			5.0	12					500 Δ	0	7	A356	ML372
61	MCM4516L	16384	1	D	MNG	120n			5.0	12					500 Δ	0	7	A356	ML371
62	MCM4517-12C	16384	1	D	MNG	120n	250n*	150m	0.0	5.0	.80	2.4§	10uΔ	5.5		0	7	A528	N
63	MCM4517-12P	16384	1	D	MNG	120n	250n*	150m	0.0	5.0	.80	2.4§	10uΔ	5.5		0	7	A528	ML376
64	MD2118-4	16384	1	D	MNG	120n	270n*	150m	0.0	5.0	.80	2.4§	10uΔ	5.5		5	C	A469	ML359
65	NMC5295J-2	16384	1	D	MNG	120n	270n	200m	0.0	5.0	.80	2.4	4.2m	.40		0	7	A468	ML280
66	NMC5295J-4	16384	1	D	MNG	120n	270n*	200m	0.0	5.0	.80	2.4§	10uΔ	5.5		0	7	A468	ML☑
67	NMC5295N-4	16384	1	D	MNG	120n	270n*	200m	0.0	5.0	.80	2.4§	10uΔ	5.5		0	7	A468	ML☑
68	AM9016FDC	16384	1	D	MNG	150nØ	45n§	1.0 ☑	5.0	12	.40	2.4§	4.2m	.40		0	7	A356	ML312a
69	AM9016FPC	16384	1	D	MNG	150nØ	45n§	1.0 ☑	5.0	12	.40	2.4§	4.2m	.40		0	7	A356	ML89d
70	C2117-2	16384	1	D	MNG	150n	320n*	462m	5.0	12	.80	2.4§	4.2m	.40	500 Δ	0	7	A351	ML358
71	D2118-7	16384	1	D	MNG	150n	320n*	150m	0.0	5.0	.80	2.4§	10uΔ	5.5		0	7	A469	ML359
72	F16K2DC	16384	1	D	MNG	150n	375n*	421m	5.0	12	.80	2.4§	4.2m	.40	500 Δ	0	7	A351	ML323
73#	HM4716A-2	16384	1	D	MNG	150n	375n*	420m	5.0	12	.80	2.7§	4.2m	.40	500 Δ	0	7	A393	ML89h
74#	HM4716AP-2	16384	1	D	MNG	150n	320n*	1.0 ☑	5.0	12	.80	2.4§	10uΔ	5.5	2.0mΔ	0	7	A393	ML89h
75#	ITT4116-2D	16384	1	D	MNG	150n	375nΔ*	1.0 ☑	5.0	12	.80	2.4§	4.2m	.40	500 Δ	0	7	PN16k	ML127f
76	ITT4116-2N	16384	1	D	MNG	150n	320nΔ*	1.0 ☑	5.0	12	.80	2.4§	3.2m	.40		0	7	PN16k	ML71f
77#	M5K4116P-2	16384	1	D	MNG	150n	375n*	462m	5.0	12	.80	2.4§	4.2m	.40	500 Δ	0	7	A356	ML336
78#	M5K4116S-2	16384	1	D	MNG	150n	375n*	462m	5.0	12	.80	2.4§	4.2m	.40	500 Δ	0	7	A356	ML337
79#	M4116-2F1	16384	1	D	MNG	150n	320n	462m	5	12	.80	2.4	4.2m	.40	500	0	7	A356	
80#	M4116P-2B1	16384	1	D	MNG	150n	320n	462m	5	12	.80	2.4	10u	0.0	500 Δ	0	7	A356	
81▼#	M4116P-2D1	16384	1	D	MNG	150n	320n	462m	5.0	12	.80	2.4	10u	0.0	500 Δ	0	7	A299	
82#	M4116P-2F1	16384	1	D	MNG	150n	320n	462m	5	12	.80	2.4	10u	0.0	500 Δ	0	7	A356	ML225
83#	MB8116H	16384	1	D	MNG	150n	375nΔ*	462m	5.0	12	.80	2.4§	4.2m	.40	500 Δ	0	7	A351	ML1m
84#	MB8216N	16384	1	D	MNG	150n	320n*	462m	5.0	12	.80	2.4§	4.2m	.40	500 Δ	0	7	A351	ML1p
85▼	MCM4117L15	16384	1	D	MNG	150n	375n*	1.0	5.0	12	.80	2.4	10uΔ	5.5	500 Δ	0	7	A356	ML264
86	MCM4517-15C	16384	1	D	MNG	150n	300n*	150m	0.0	5.0	.80	2.4§	10uΔ	5.5		0	7	A528	ML372
87	MCM4517-15P	16384	1	D	MNG	150n	300n*	150m	0.0	5.0	.80	2.4§	10uΔ	5.5		0	7	A528	ML376
88	MD2118-7	16384	1	D	MNG	150n	320n*	150m	0.0	5.0	.80	2.4§	10uΔ	5.5		5	C	A469	ML359
89▼	MK4116E-2	16384	1	D	MNG	150n	320n*	462m	5.0	12	.80	2.4	10uΔ	5.5		0	7	A356	LC18c
90	MK4116N-2	16384	1	D	MNG	150n	320n	462m	5.0	12	.80	2.2	4.2m	.40	500	0	7	A356	ML349
91	MK4116P-2	16384	1	D	MNG	150n	320n	462m	5.0	12	.80	2.4	4.2m	.40	500 Δ	0	7	A356	ML225
92	MM5290J-2	16384	1	D	MNG	150n	375n*	462m	5.0	12	.80	2.4	4.2m	.40	500 Δ	0	7	A351	ML127k
93	MM5290N-2	16384	1	D	MNG	150n	375n	528m	5.0	12	.80	2.4	4.2m	.40	500 Δ	0	7	A351	ML178
94	MM5298AJ-2	16384	1	D	MNG	150n	375n	528m	5.0	12	.80	2.4	4.2m	.40	500 Δ	0	7	A351	ML127k
95	MM5298AN-2	16384	1	D	MNG	150n	375n	528m	5.0	12	.80	2.4	4.2m	.40	500 Δ	0	7	A351	ML178
96	MM5298BJ-2	16384	1	D	MNG	150n	375n	528m	5.0	12	.80	2.4	4.2m	.40	500 Δ	0	7	A351	ML127k
97	MM5298BN-2	16384	1	D	MNG	150n	375n	528m	5.0	12	.80	2.4	4.2m	.40	500 Δ	0	7	A351	ML178
98#	MSM3716-2AS	16384	1	D	MNG	150n	375n*	528m†	0.0	15	.80	2.4	4.2m	.40	500kΔ	0	7		
99♦	TMM416D-2	16384	1	D	MNG	150n	320n*	462m	5.0	12	0.8	2.7	4.2m	.40		0	7	A340	ML372
100	TMM416P-2	16384	1	D	MNG	150n	320n*	462m	5.0	12	0.8	2.7	4.2m	0.4		0	7	A340	ML349
101	TMS4116-15JDL	16384	1	D	MNG	150n	375n*	462m	5.0	12	.80	2.4§	4.2m	.40	500 Δ	0	7	A340	ML206
102	TMS4116-15NL	16384	1	D	MNG	150n	375n*	462m	5.0	12	.80	2.4§	4.2m	.40	500 Δ	0	7	A340	ML209
103#	uPD416C-3	16384	1	D	MNG	150n	375n*	421m	5.0	12	.40	2.4	4.2m	.40		0	7	A445	ML349
104#	uPD416D-3	16384	1	D	MNG	150n	375n*	421m	5.0	12	4.0	2.4	4.2m	.40		0	7	A445	ML364
105	AM9016EDC	16384	1	D	MNG	200nØ	55n§	1.0 ☑	5.0	12	.40	2.4§	4.2m	.40		0	7	A356	ML312a
106	AM9016EPC	16384	1	D	MNG	200nØ	55n§	1.0 ☑	5.0	12	.40	2.4§	4.2m	.40		0	7	A356	ML89d
107	C2117-3	16384	1	D	MNG	200n	375n*	462m	5.0	12	.80	2.4§	4.2m	.40	500 Δ	0	7	A351	ML358
108	F16K3DC	16384	1	D	MNG	200n	375n*	421m	5.0	12	.80	2.4§	4.2m	.40	500 Δ	0	7	A351	ML323
109#	HM4716A-3	16384	1	D	MNG	200n	375n*	420m	5.0	12	.80	2.7§	4.2m	.40	500 Δ	0	7	A393	ML89h
110#	HM4716AP-3	16384	1	D	MNG	200n	375n*	1.0 ☑	5.0	12	.80	2.4§	10uΔ	5.5	2.0mΔ	0	7	A393	ML89h

SYMBOLS AND CODES EXPLAINED IN INTERPRETER

2. READ-WRITE MEMORIES (RAMS)

IN ORDER OF (1)No.WORDS(2)No.BITS/WORD (3)MODE(4)STRUCT.(5)MAX ACC.TIME(6)TYPE No.

LINE No.	6 TYPE No.	ORGANIZATION 1 No. WORDS	2 BITS PER WORD	3 MODE	4 STRUCTURE CODE	5 MAX ACCESS TIME (s)	MAX WRITE CYCLE TIME (s)	MAX OPER. POWER DISS. (W)	RATED POWER SUP. SPAN NEG. (V)	POS. (V)	INPUT LOGIC LEVELS MAX '0' (V)	MIN '1' (V)	MIN OUTPUT SINK CURRENT (A)	@ OUT (V)	MIN CLOCK FREQ. (Hz)	OPER. TEMP. RANGE CODE -	+	DRAWINGS LOGIC/ BLOCK	OUTLINE
1#	HYB4116-A3	16384	1	D	MNG	200n	375n*	1.0 ☑	5.0	12	.80	2.4§	4.2m	.40	500 △	0	7	A351	ML302
2#	HYB4116-P3	16384	1	D	MNG	200n	375n*	1.0 ☑	5.0	12	.80	2.4§	4.2m	.40	500 △	0	7	A351	ML336
3#	ITT4116-3D	16384	1	D	MNG	200n	375n△*	1.0 ☑	5.0	12	.80	2.4§	4.2m	.40	500 △	0	7	PN16k	ML127f
4	ITT4116-3N	16384	1	D	MNG	200n	375n△*	1.0 ☑	5.0	12	.80	2.4§	3.2m	.40		0	7	PN16k	ML71f
5#	M5K4116P-3	16384	1	D	MNG	200n	375n*	462m	5.0	12	.80	2.4§	4.2m	.40	500 △	0	7	A356	ML336
6#	M5K4116S-3	16384	1	D	MNG	200n	375n*	462m	5.0	12	.80	2.4§	4.2m	.40	500 △	0	7	A356	ML337
7#	M4116-3F1	16384	1	D	MNG	200n	375n	462m	5	12	.80	2.4	4.2m	.40	500	0	7	A356	
8#	M4116P-3B1	16384	1	D	MNG	200n	375n	462m	5	12	.80	2.4	10u	0.0	500 △	0	7	A356	
9▼#	M4116P-3D1	16384	1	D	MNG	200n	375n	462m	5.0	12	.80	2.4	10u	0.0	500 △	0	7	A299	
10#	M4116P-3F1	16384	1	D	MNG	200n	375n	462m	5	12	.80	2.4	10u	0.0	500 △	0	7	A356	ML225
11#	MB8116E	16384	1	D	MNG	200n	375n△*	462m	5.0	12	.80	2.4§	4.2m	.40	500 △	0	7	A351	ML1m
12▼	MCM4117L20	16384	1	D	MNG	200n	375n*	1.0	5.0	12	.80	2.4	10u△	5.5	500 △	0	7	A356	ML264
13▼	MK4116E-3	16384	1	D	MNG	200n	375n*	462m	5.0	12	.80	2.4	10u△	5.5		0	7	A356	LC18c
14	MK4116N-3	16384	1	D	MNG	200n	375n	462m	5.0	12	.80	2.2	4.2m	.40	500	0	7	A356	ML349
15	MK4116P-3	16384	1	D	MNG	200n	375n	462m	5.0	12	.80	2.4	4.2m	.40	500 △	0	7	A356	ML225
16▼	MK4516E-20	16384	1	D	MNG	200n	410n*	150m	0.0	5.0	.80	2.4	10u△	5.0		0	7	PN16ho	LC18c
17▼	MK4516N-20	16384	1	D	MNG	200n	410n*	150m	0.0	5.0	.80	2.4	10u△	5.0		0	7	PN16ho	ML349
18♦	MKB4116E-93	16384	1	D	MNG	200n	375n	462m	0.0	12	.80	2.4	10u△	5.5		5	8	A356	LC18a
19	MKB4116F-93	16384	1	D	MNG	200n	375n	462m	0.0	12	.80	2.4	10u△	5.5		5	8	A356	FL73
20	MKB4116J-83	16384	1	D	MNG	200n	375n	462m	0.0	12	.80	2.4	10u△	5.5		5	8	A356	ML350
21	MKB4116J-93	16384	1	D	MNG	200n	375n	462m	0.0	12	.80	2.4	10u△	5.5		5	8	A356	ML350
22	MKB4116P-83	16384	1	D	MNG	200n	375n	462m	0.0	12	.80	2.4	10u△	5.5		5	8	A356	ML225
23	MKB4116P-93	16384	1	D	MNG	200n	375n	462m	0.0	12	.80	2.4	10u△	5.5		5	8	A356	ML225
24	MM5290J-3	16384	1	D	MNG	200n	375n*	528m	5.0	12	.80	2.4	4.2m	.40	500 △	0	7	A351	ML127k
25	MM5290N-3	16384	1	D	MNG	200n	375n	528m	5.0	12	.80	2.4	4.2m	.40	500 △	0	7	A351	ML178
26	MM5298AJ-3	16384	1	D	MNG	200n	375n	528m	5.0	12	.80	2.4	4.2m	.40	500 △	0	7	A351	ML127k
27	MM5298AN-3	16384	1	D	MNG	200n	375n	528m	5.0	12	.80	2.4	4.2m	.40	500 △	0	7	A351	ML178
28	MM5298BJ-3	16384	1	D	MNG	200n	375n	528m	5.0	12	.80	2.4	4.2m	.40	500 △	0	7	A351	ML127k
29	MM5298BN-3	16384	1	D	MNG	200n	375n	528m	5.0	12	.80	2.4	4.2m	.40	500 △	0	7	A351	ML178
30#	MN4116	16384	1	D	MNG	200n		462m	0.0	5.0	.80	2.4				0	7	A356	ML225
31#	MSM3716-3AS	16384	1	D	MNG	200n	375n*	528m†	0.0	15	.80	2.4	4.2m	.40	500k△	0	7		
32♦	TMM416D-3	16384	1	D	MNG	200n	375	462m	5.0	12	0.8	2.7	4.2m	.40		0	7	A340	ML372
33	TMM416P-3	16384	1	D	MNG	200n	375n*	462m	5.0	12	0.8	2.7	4.2m	0.4		0	7	A340	ML349
34	TMS4116-20JDL	16384	1	D	MNG	200n	375n*	462m	5.0	12	.80	2.4§	4.2m	.40	500 △	0	7	A340	ML206
35	TMS4116-20NL	16384	1	D	MNG	200n	375n*	462m	5.0	12	.80	2.4§	4.2m	.40	500 △	0	7	A340	ML209
36#	uPD416C-2	16384	1	D	MNG	200n	375n*	421m	5.0	12	.40	2.4	4.2m	.40		0	7	A445	ML349
37#	uPD416D-2	16384	1	D	MNG	200n	375n*	421m	5.0	12	4.0	2.4	4.2m	.40		0	7	A445	ML364
38	AM9016DDC	16384	1	D	MNG	250nØ	75n$	1.0 ☑	5.0	12	.40	2.4§	4.2m	.40		0	7	A356	ML312a
39	AM9016DPC	16384	1	D	MNG	250nØ	75n$	1.0 ☑	5.0	12	.40	2.4§	4.2m	.40		0	7	A356	ML89d
40	C2117-4	16384	1	D	MNG	250n	410n*	462m	5.0	12	.80	2.4§	4.2m	.40	500 △	0	7	A351	ML358
41	F16K4DC	16384	1	D	MNG	250n	410n*	421m	5.0	12	.80	2.4§	4.2m	.40	500 △	0	7	A351	ML323
42#	HM4716A-4	16384	1	D	MNG	250n	515n*	420m	5.0	12	.80	2.7§	4.2m	.40	500 △	0	7	A393	ML89h
43#	HM4716AP-4	16384	1	D	MNG	250n	410n*	1.0 ☑	5.0	12	.80	2.4§	10u△	5.5	2.0m△	0	7	A393	ML89h
44#	HYB4116-A4	16384	1	D	MNG	250n	410n*	1.0 ☑	5.0	12	.80	2.4§	4.2m	.40	500 △	0	7	A351	ML1j
45#	HYB4116-P4	16384	1	D	MNG	250n	410n*	1.0 ☑	5.0	12	.80	2.4§	4.2m	.40	500 △	0	7	A351	ML336
46#	ITT4116-4D	16384	1	D	MNG	250n	515n△*	1.0 ☑	5.0	12	.80	2.4§	4.2m	.40	500 △	0	7	PN16k	ML127f
47	ITT4116-4N	16384	1	D	MNG	250n	425n△*	1.0 ☑	5.0	12	.80	2.4§	3.2m	.40		0	7	PN16k	ML71f
48▼#	M5K4116S4	16384	1	D	MNG	250n	410n*	260m†	0.0	12						0	7		DL☑
49#	M4116-4F1	16384	1	D	MNG	250n	410n	462m	5	12	.80	2.4	4.2m	.40	500	0	7	A356	
50#	M4116P-4B1	16384	1	D	MNG	250n	425n	1.0	5	12	.80	2.4	10u	0.0	500 △	0	7	A356	
51▼#	M4116P-4D1	16384	1	D	MNG	250n	425n	1.0	5.0	12	.80	2.4	10u	0.0	500 △	0	7	A299	
52#	M4116P-4F1	16384	1	D	MNG	250n	425n	1.0	5	12	.80	2.4	10u	0.0	500 △	0	7	A356	ML225
53▼	MCM4117L25	16384	1	D	MNG	250n	410n*	1.0	5.0	12	.80	2.4	10u△	5.5	500 △	0	7	A356	ML264
54	MK4116N-4	16384	1	D	MNG	250n	410n	462m	5.0	12	.80	2.2	4.2m	.40	500	0	7	A356	ML349
55	MK4116P-4	16384	1	D	MNG	250n	410n	462m	5.0	12	.80	2.4§	4.2m	.40	500 △	0	7	A356	ML225
56♦	MKB4116E-84	16384	1	D	MNG	250n	410n	462m	0.0	12	.80	2.4	10u△	5.5		5	8	A356	LC18a
57	MKB4116F-84	16384	1	D	MNG	250n	410n	462m	0.0	12	.80	2.4	10u△	5.5		5	8	A356	FL73
58	MKB4116J-84	16384	1	D	MNG	250n	410n	462m	0.0	12	.80	2.4	10u△	5.5		5	8	A356	ML350
59	MKB4116P-84	16384	1	D	MNG	250n	410n	462m	0.0	12	.80	2.4	10u△	5.5		5	8	A356	ML225
60	MM5290J-4	16384	1	D	MNG	250n	410n	528m	5.0	12	.80	2.4	4.2m	.40	500 △	0	7	A351	ML127k
61	MM5290N-4	16384	1	D	MNG	250n	410n	528m	5.0	12	.80	2.4	4.2m	.40	500 △	0	7	A351	ML178
62	MM5298AJ-4	16384	1	D	MNG	250n	410n	528m	5.0	12	.80	2.4	4.2m	.40	500 △	0	7	A351	ML127k
63	MM5298AN-4	16384	1	D	MNG	250n	410n	528m	5.0	12	.80	2.4	4.2m	.40	500 △	0	7	A351	ML178
64	MM5298BJ-4	16384	1	D	MNG	250n	410n	528m	5.0	12	.80	2.4	4.2m	.40	500 △	0	7	A351	ML127k
65	MM5298BN-4	16384	1	D	MNG	250n	410n	528m	5.0	12	.80	2.4	4.2m	.40	500 △	0	7	A351	ML178
66#	MSM3716-4AS	16384	1	D	MNG	250n	375n*	528m†	0.0	15	.80	2.4	4.2m	.40	500k△	0	7		
67♦	TMM416D-4	16384	1	D	MNG	250n	410n*△	462m	5.0	12	0.8	2.7	4.2m	.40		0	7	A340	ML372
68	TMM416P-4	16384	1	D	MNG	250n	410n*	462m	5.0	12	0.8	2.7	4.2m	0.4		0	7	A340	ML349
69	TMS4116-25JDL	16384	1	D	MNG	250n	410n*	462m	5.0	12	.80	2.4§	4.2m	.40	500 △	0	7	A340	ML206
70	TMS4116-25NL	16384	1	D	MNG	250n	410n*	462m	5.0	12	.80	2.4§	4.2m	.40	500 △	0	7	A340	ML209
71#	uPD416C-1	16384	1	D	MNG	250n	410n*	421m	5.0	12	.40	2.4	4.2m	.40		0	7	A445	ML349
72#	uPD416D-1	16384	1	D	MNG	250n	410n*	421m	5.0	12	4.0	2.4	4.2m	.40		0	7	A445	ML364
73	AM9016CDC	16384	1	D	MNG	300nØ	85n$	1.0 ☑	5.0	12	.40	2.4§	4.2m	.40		0	7	A356	ML312a
74	AM9016CPC	16384	1	D	MNG	300nØ	85n$	1.0 ☑	5.0	12	.40	2.4§	4.2m	.40		0	7	A356	ML89d
75	F16K5DC	16384	1	D	MNG	300n	500n*	421m	5.0	12	.80	2.4§	4.2m	.40	500 △	0	7	A351	ML323
76▼	MCM4117L30	16384	1	D	MNG	300n	480n*	1.0	5.0	12	.80	2.4	10u△	5.5	500 △	0	7	A356	ML264
77#	uPD416C	16384	1	D	MNG	300n	510n*	421m	5.0	12	.40	2.4	4.2m	.40		0	7	A445	ML349
78#	uPD416D	16384	1	D	MNG	300n	510n*	421m	5.0	12	.40	2.4	4.2m	.40		0	7	A445	ML364
79#	uPD416C-E	16384	1	D	MNG	350n	510n*	421m	5.0	12	.40	2.4	4.2m	.40		0	7	A445	ML349
80#	uPD416D-E	16384	1	D	MNG	350n	510n*	421m	5.0	12	.40	2.4	4.2m	.40		0	7	A445	ML364
81	2117-2	16384	1	D	MNX	150n	320n△	462m	5.0	12	0.8	2.4§	10u△	5.5		0	7	A351	
82	D2117-2	16384	1	D	MNX	150n	320n*	462m	5.0	12	.80	2.4§	4.2m	.40	500 △	1	8	A351	ML359
83#	EF4116BC-15	16384	1	D	MNX	150n	375n*	426m	5	12	0.8	2.4	4.2m	0.4		0	7	A356	ML236
84#	EF4116BJ-15	16384	1	D	MNX	150n	375n*	426m	5	12	0.8	2.4	4.2m	0.4		0	7	A356	ML236
85	MCM4116AC15	16384	1	D	MNX	150n	375n*	462m	5.0	12	.80	2.4§	4.2m	.40	500 △	0	7	A356	ML372
86	MCM4116AL15	16384	1	D	MNX	150n	375n*	462m	5.0	12	.80	2.4§	4.2m	.40	500 △	0	7	A356	ML371
87	MCM4116BP-15	16384	1	D	MNX	150n	375n	1.0 ☑	4.5	13	0.8	2.4§	10u△†		2.0m△	0	6	A356	ML376
88	MCM4116C15	16384	1	D	MNX	150n	375n*	462m	5.0	12	.80	2.4§	4.2m	.40	500 △	0	7	A356	ML372
89	MCM4116L15	16384	1	D	MNX	150n	375n*	462m	5.0	12	.80	2.4§	4.2m	.40	500 △	0	7	A356	ML371
90	2117-3	16384	1	D	MNX	200n	375nΔ	462m	5.0	12	0.8	2.4§	10u△	5.5		0	7	A351	
91	D2117-3	16384	1	D	MNX	200n	375n*	462m	5.0	12	.80	2.4§	4.2m	.40	500 △	1	8	A351	ML359
92#	EF4116BJ-20	16384	1	D	MNX	200n	375n*	426m	5	12	0.8	2.4	4.2m	0.4		0	7	A356	ML236
93	MCM4116AC20	16384	1	D	MNX	200n	375n*	462m	5.0	12	.80	2.4§	4.2m	.40	500 △	0	7	A356	ML372
94	MCM4116AL20	16384	1	D	MNX	200n	375n*	462m	5.0	12	.80	2.4§	4.2m	.40	500 △	0	7	A356	ML371
95	MCM4116BC-20	16384	1	D	MNX	200n	375n	1.0 ☑	4.5	13	0.8	24§	10u△†		2.0m△	0	6	A356	ML327
96	MCM4116C20	16384	1	D	MNX	200n	375n*	462m	5.0	12	.80	2.4§	4.2m	.40	500 △	0	7	A356	ML372
97	MCM4116L20	16384	1	D	MNX	200n	375n*	462m	5.0	12	.80	2.4§	4.2m	.40	500 △	0	7	A356	ML371
98	MCM6616L20	16384	1	D	MNX	200n	375nΔ*	600m	5.0	12	.80	2.4§	4.2m	.40	500 △	0	7	A356	ML1e
99	MCM6616P20	16384	1	D	MNX	200n	375nΔ*	600m	5.0	12	.80	2.4§	4.2m	.40	500 △	0	7	A356	ML145
100	2117-4	16384	1	D	MNX	250n	410nΔ	462m	5.0	12	0.8	2.4§	10u△	5.5		0	7	A351	
101	D2117-4	16384	1	D	MNX	250n	410n*	462m	5.0	12	.80	2.4§	4.2m	.40	500 △	1	8	A351	ML359
102#	EF4116BC-25	16384	1	D	MNX	250n	410n*	426m	5	12	0.8	2.4	4.2m	0.4		0	7	A356	ML236
103	MCM4116AC25	16384	1	D	MNX	250n	410n*	462m	5.0	12	.80	2.4§	4.2m	.40	500 △	0	7	A356	ML372
104	MCM4116AL25	16384	1	D	MNX	250n	410n*	462m	5.0	12	.80	2.4§	4.2m	.40	500 △	0	7	A356	ML371
105	MCM4116C25	16384	1	D	MNX	250n	410n*	462m	5.0	12	.80	2.4§	4.2m	.40	500 △	0	7	A356	ML372
106	MCM4116L25	16384	1	D	MNX	250n	410n*	462m	5.0	12	.80	2.4§	4.2m	.40	500 △	0	7	A356	ML371
107	MCM6616L25	16384	1	D	MNX	250n	515nΔ*	600m	5.0	12	.80	2.4§	4.2m	.40	500 △	0	7	A356	ML1e
108	MCM6616P25	16384	1	D	MNX	250n	515nΔ*	600m	5.0	12	.80	2.4§	4.2m	.40	500 △	0	7	A356	ML145
109	C2117-5	16384	1	D	MNX	300n	490n*	462m	5.0	12	.80	2.4§	4.2m	.40	500 △	1	8	A351	ML358
110#	EF4116BC-30	16384	1	D	MNX	300n	480n*	426m	5	12	0.8	2.4	4.2m	0.4		0	7	A356	ML236

SYMBOLS AND CODES EXPLAINED IN INTERPRETER

2. READ-WRITE MEMORIES (RAMS)

IN ORDER OF (1)No.WORDS(2)No.BITS/WORD (3)MODE(4)STRUCT.(5)MAX ACC.TIME(6)TYPE No.

LINE No.	6 TYPE No.	ORGANIZATION 1 No. WORDS	2 BITS PER WORD	3 MODE	4 STRUCTURE CODE	5 MAX ACCESS TIME (s)	MAX WRITE CYCLE TIME (s)	MAX OPER. POWER DISS. (W)	RATED POWER SUP. SPAN NEG. (V)	POS. (V)	INPUT LOGIC LEVELS MAX '0' (V)	MIN '1' (V)	MIN OUTPUT SINK CURRENT (A)	@ OUT (V)	MIN CLOCK FREQ. (Hz)	OPER. TEMP. RANGE CODE -	+	DRAWINGS LOGIC/ BLOCK	OUTLINE
1#	EF4116BJ-30	16384	1	D	MNX	300n	480n*	426m	5	12	0.8	2.4	4.2m	0.4		0	7	A356	ML236
2	MCM4116AC30	16384	1	D	MNX	300n	480n*	462m	5.0	12	.80	2.4§	4.2m	.40	500 △	0	7	A356	ML372
3	MCM4116AL30	16384	1	D	MNX	300n	480n*	462m	5.0	12	.80	2.4§	4.2m	.40	500 △	0	7	A356	ML371
4	MCM4116BC-30	16384	1	D	MNX	300n	660n	1.0 ☑	4.5	13	0.8	24§	10u△†		2.0m△	0	6	A356	ML327
5	MCM4116C30	16384	1	D	MNX	300n	480n*	462m	5.0	12	.80	2.4§	4.2m	.40	500 △	0	7	A356	ML372
6	MCM4116L30	16384	1	D	MNX	300n	480n*	462m	5.0	12	.80	2.4§	4.2m	.40	500 △	0	7	A356	ML371
7	MCM6616L30	16384	1	D	MNX	300n	660n△*	600m	5.0	12	.80	2.4§	4.2m	.40	500 △	0	7	A356	ML1e
8	MCM6616P30	16384	1	D	MNX	300n	660n△*	600m	5.0	12	.80	2.4§	4.2m	.40	500 △	0	7	A356	ML145
9	MCM4116BC-25	16384	1	D	MNX	250n	515n	1.0 ☑	4.5	13	0.8	24§	10u△†		2.0m△	0	6	A356	ML327
10	uPD2167	16384	1	S	MNG	55n	55n*	160m	0.0	5.0								PN22ab	
11▼	MB8167	16384	1	S	MNG	70n	70n*	1.2	0.0	5.0	0.8	2.0§	50u△			1	8	A545	ML446
12#	MB8132EH	32768	1	D	MNG	150n	320n*	250m†	2.5	7.0	.80	2.2	12m	.40	500 △	0	7	A412b	ML1p
13#	MB8132EL	32768	1	D	MNG	150n	320n*	250m†	2.5	7.0	.80	2.2	12m	.40	500 △	0	7	A412a	ML1p
14	MCM6630L15	32768	1	D	MNG	150n	300n*	275m	0.0	5.0	.80	2.4§	10u△	5.5		0	7	A437	ML318
15	MCM6631L15	32768	1	D	MNG	150n	300n*	275m	0.0	5.0	.80	2.4§	10u△	5.5		0	7	A437	ML318
16	MCM6633L15	32768	1	D	MNG	150n	300n*	275m	0.0	5.0	.80	2.4§	10u△	5.5		0	7	A437	ML318
17	TMS4132-15JDL	32768	1	D	MNG	150n	375n*	380m†	5.0	12	.80	2.4§	4.2m	.40	500 △	0	7	A340a	ML210d
18	MCM6630L20	32768	1	D	MNG	200n	330n*	275m	0.0	5.0	.80	2.4§	10u△	5.5		0	7	A437	ML318
19	MCM6631L20	32768	1	D	MNG	200n	330n*	275m	0.0	5.0	.80	2.4§	10u△	5.5		0	7	A437	ML318
20	MCM6633L20	32768	1	D	MNG	200n	330n*	275m	0.0	5.0	.80	2.4§	10u△	5.5		0	7	A437	ML318
21	MK4332D-3	32768	1	D	MNG	200n	375n*	482m	5.0	12	.80	2.2	4.2m	.40	500	0	7	A414	ML315
22	TMS4132-20JDL	32768	1	D	MNG	200n	375n*	380m†	5.0	12	.80	2.4§	4.2m	.40	500 △	0	7	A340a	ML210d
23	TMS4132-25JDL	32768	1	D	MNG	250n	410n*	380m†	5.0	12	.80	2.4§	4.2m	.40	500 △	0	7	A340a	ML210d
24♦	MK4164E-12	65536	1	D		120n	265n*△	330m	0.0	5.0	0.8	2.4	10u△			0	7	PN16gx	LC18b
25	MK4164E-15	65536	1	D		150n	325n*△	330m	0.0	5.0	0.8	2.4	10u△			0	7	PN16gx	CH☑
26	MK4164N-15	65536	1	D		150n	325n*△	330m	0.0	5.0	0.8	2.4	10u△			0	7	PN16gx	ML349
27	MK4164J-12	65536	1	D	MN☑	120n	265n	300m	0.0	5.0	.80	2.4	10u△	5.5		0	7	PN16gx	ML60d
28	MK4164N-12	65536	1	D	MN☑	120n	265n	300m	0.0	5.0	.80	2.4	10u△	5.5		0	7	PN16gx	ML349
29	MCM6664-15C	65536	1	D	MNG		300n*△	275m	0.0	5.0	0.8	2.4§	10u△	5.5	2.0m△	0	6		ML318
30	MCM6664-15L	65536	1	D	MNG		300n*△	275m	0.0	5.0	0.8	2.4§	10u△	5.5	2.0m△	0	6		ML318
31	MCM6664-20C	65536	1	D	MNG		330n*△	275m	0.0	5.0	0.8	2.4§	10u△			0	6		ML317
32	MCM6664-20L	65536	1	D	MNG		330n*△	275m	0.0	5.0	0.8	2.4§	10u△			0	6	A435	ML317
33	NMC4164J-1	65536	1	D	MNG	100n	235n	220m	0.0	5.0	.80	2.4	4.2m	.40		0	7	A469	ML280
34	NMC4164J-2	65536	1	D	MNG	120n	270n	220m	0.0	5.0	.80	2.4	4.2m	.40		0	7	A469	ML280
35#	HM4864-2	65536	1	D	MNG	150n	270n*	1.0 ☑	0.0	5.0	.80	2.4	10u△	5.5	2.0m△	0	7	A412c	ML84
36▼#	M5K4164S-15	65536	1	D	MNG	150n	260n	250m	0.0	5.0	0.8	2.4	4.2	0.4	500	0	7	A435	ML337
37▼	MB8264-15E	65536	1	D	MNG	150n	300n*△	1.0	0.0	5.0	0.8	2.4§	-10u△		2.0m	0	7	PN16hd	ML345
38	MCM6665-15L	65536	1	D	MNG	150n	300n*	275m	0.0	5.0	.80	2.4§	10u△	5.5		0	7	A437	ML318
39▼	TMM4164C-3	65536	1	D	MNG	150n	320n	275m	0.0	5.0	.80	2.4	4.2m	.40		0	7	A451	ML345
40	TMS4164-15JDL	65536	1	D	MNG	150n	250n*	125m†	0.0	5.0	.80	2.4§	4.2m	.40	250 △	0	7	A424	ML210d
41	TMS4164JDL	65536	1	D	MNG	150n	260n	125m	0.0	10	.80	2.4§	50m☑			0	7	A424	ML206
42▼#	uPD4164D-3	65536	1	D	MNG	150n	270n*	330m	0.0	5.0	.80	2.4	10u△	5.5		0	7	PN16he	ML364
43#	HM4864-3	65536	1	D	MNG	200n	335n*	1.0 ☑	0.0	5.0	.80	2.4	10u△	5.5	2.0m△	0	7	A412c	ML84
44▼#	M5K4164S-20	65536	1	D	MNG	200n	330n	250m	0.0	5.0	0.8	2.4	4.2	0.4	500	0	7	A435	ML337
45▼#	M58764S20	65536	1	D	MNG	200n	330n*	150m†	0.0	5.0						0	7		DL☑
46#	MB8164E	65536	1	D	MNG	200n	320n	250m†	2.5	7.0	.80	2.4	12m	.40		0	7	A412c	ML1p
47▼	MB8264-20N	65536	1	D	MNG	200n	375n*△	1.0	0.0	5.0	0.8	2.4§	-10u△		2.0m	0	7	PN16hd	ML345
48	MCM6665-20L	65536	1	D	MNG	200n	330n*	275m	0.0	5.0	.80	2.4§	10u△	5.5		0	7	A437	ML318
49▼	TMM4164C-4	65536	1	D	MNG	200n	330n	275m	0.0	5.0	.80	2.4	4.2m	.40		0	7	A451	ML345
50	TMS4164-20JDL	65536	1	D	MNG	200n	326n*	125m†	0.0	5.0	.80	2.4§	10u△	5.5		0	7	A424	ML206
51	uPD4164C-2	65536	1	D	MNG	200n	375n*	1.0 ☑	0.0	5.0	.80	2.4§	10u△	5.5		0	7	PN16he	ML349
52	uPD4164D2	65536	1	D	MNG	200n	375n*	1.0 ☑	0.0	5.0	.80	2.4§	10u△	5.5		0	7	PN16he	ML395
53▼#	uPD4164D-2	65536	1	D	MNG	200n	335n*	275m	0.0	5.0	.80	2.4	10u△	5.5		0	7	PN16he	ML364
54▼	MCM6665L25-5L	65536	1	D	MNG	250n	410n*	275m	0.0	5.0	.80	2.4§	10u△	5.5		0	7	A437	ML318
55	uPD4164C-1	65536	1	D	MNG	250n	410n*	1.0 ☑	0.0	5.0	.80	2.4§	10u△	5.5		0	7	PN16he	ML349
56	uPD4164D-1	65536	1	D	MNG	250n	410n*	1.0 ☑	0.0	5.0	.80	2.4§	10u△	5.5		0	7	PN16he	ML395
57▼	MK4528D-20	134144	1	D		200n	380n*	352m	0.0	5.0									ML315

3. READ ONLY MEMORIES (ROMS)

IN ORDER OF (1)No.WDS(2)No.BITS/WD(3)OP.MODE PRG.CODE(4)STRUCT.(5)MAX ACC.TIME(6)TYPE No.

LINE No.	6 TYPE No.	ORGANIZATION 1 No. WORDS	2 BITS PER WORD	3 OP MODE PROG CODE	4 STRUCTURE CODE	5 MAX ACCESS TIME (s)	MAX OPER. POWER DISS. (W)	RATED POWER SUP. SPAN NEG. (V)	POS. (V)	INPUT LOGIC LEVELS MAX '0' (V)	MIN '1' (V)	MIN OUTPUT SINK CURRENT (A)	@ OUT (V)	OPER. TEMP. RANGE CODE -	+	GENERAL DESCRIPTION	DRAWINGS LOGIC/ BLOCK	OUTLINE
1	HM1-6611A-9																	
2	MS109	1	9	SE	TAX	70n		0.0	5.0					0	7	Pr Non-Vol		CY8
3	MS113	1	13	SE	TAX	70n		0.0	5.0					0	7	Pr Non-Vol		ML☐
4	MS116	1	16	SE	TAX	70n		0.0	5.0					0	7	Pr Non-Vol		ML☐
5	MS208	2	8	SE	TAX	70n		0.0	5.0					0	7	Pr Non-Vol		ML☐
6	MS204	4	2		BAX	50n†	8.5m	0.0	5.0	1.4	.20			5	7	PR Non-Vol RMM	B141	CY7b
7	RM15	8	4		TAX	50n†	8.5m	0.0	5.0	2.0	.80			0	7	PR Non-Vol RMM	B138	ML82
8	MS115	15	1		TAX	50n†	8.5m	0.0	5.0	1.4	.20			5	7	PR Non-Vol RMM	B140	ML82
9	RM15Y	15	1		TAX	50n†	8.5m	0.0	5.0	2.0	.80			0	7	PR Non-Vol RMM	B139	ML82
10	RM32	15	1		TAX	50n†	8.5m	0.0	5.0	2.0	.80			0	7	PR Non-Vol RMM	B137	ML82
11#	MN1208	16	16	SE		10	130m†			-2.6	-4.2			2	7	EA ROM	B411	ML355
12	RM256A#5	16$	16$	SE	TAX	50n†	8.5m	0.0	5.0	2.0	.80			5	7	PR Non-Vol RMM	PN40A	ML14
13	AM27LS19DC	32	8			55nØ	400m	0.0	5.0	.80	2.0$	16m	.45	0	7	PROM	B449	ML312a
14	AM27LS19DM	32	8		BTD	75nØ	400m	0.0	5.0	.80	2.0$	16m	.45	5	C	PROM	B449	ML312a
15	AM27LS19FM	32	8		BTD	75nØ	400m	0.0	5.0	.80	2.0$	16m	.45	5	C	PROM	B449	FL33B
16	TBP18S030J	32	8	S	BTD	40n	400m†	0.0	5.0	.80	2.0$	20m†		0	7	PROM	PN16hl	ML☐
17	TBP18S030N	32	8	S	BTD	40n	400m†	0.0	5.0	.80	2.0$	20m†		0	7	PROM	PN16hl	ML☐
18#	M54730K	32	8	S	BXX	50n	450m†	0.0	5.0		△			0	7	EPROM;Fld Prg		DL☐
19#	M54730P	32	8	S	BXX	50n	450m†	0.0	5.0		△			0	7	EPROM;Fld Prg		DL☐
20#	TM188	32	8	SC		40n	1.2m	0.0	5.0	.80	2.0	20m		0	7	PROM	B132	ML394
21	N7488B	32	8	SC	BTX	50nØ	400m	0.0	5.0	.40%	2.4	16m	.40	0	7	PROM	B67	ML132
22	N7488W	32	8	SC	BTX	50nØ	400m	0.0	5.0	.40%	2.4	16m	.40	0	7	PROM	B67	FL25
23	N8224B	32	8	SC	BTX	50n$Ø	400mØ	0.0	5.0	.40%		9.6m	.40	0	7		B67	ML89a
24	N8224F	32	8	SC	BTX	50n$Ø	400mØ	0.0	5.0	.40%		9.6m	.40	0	7		B67	ML60a
25	N8224W	32	8	SC	BTX	50n$Ø	400mØ	0.0	5.0	.40%		9.6m	.40	0	7		B67	FL25
26#	RC8224B	32	8	SC	BTX	50n$Ø	400mØ	0.0	5.0	.40%		9.6m	.40	5	C		B67	ML89a
27#	RC8224F	32	8	SC	BTX	50n$Ø	400mØ	0.0	5.0	.40%		9.6m	.40	5	C		B67	ML60a
28#	RC8224W	32	8	SC	BTX	50n$Ø	400mØ	0.0	5.0	.40%		9.6m	.40	5	C		B67	FL25
29	S8224B	32	8	SC	BTX	50n$Ø	400mØ	0.0	5.0	.40%		9.6m	.40	5	C		B67	ML89a
30	S8224F	32	8	SC	BTX	50n$Ø	400mØ	0.0	5.0	.40%		9.6m	.40	5	C		B67	ML60a
31	S8224W	32	8	SC	BTX	50n$Ø	400mØ	0.0	5.0	.40%		9.6m	.40	5	C		B67	FL25
32#	T154D1	32	8	SC	BTX	50nØ	400m♦	0.0	5.0	.90	2.0	10m	.45	0	7		PN16br	ML60
33	AM27LS18DM	32	8	SE		75nØ	400m	0.0	5.0	.80	2.0△	16m	.45	5	C	PROM	B449	ML312a
34	AM27LS18FM	32	8	SE		75nØ	400m	0.0	5.0	.80	2.0△	16m	.45	5	C	PROM	B449	FL33B
35	MCM10139F	32	8	SE	BEX	20n	754m	5.2	0.0	-4.2	-1.0	50m☐		0	7	PROM	B293	FL34
36	MCM10139L	32	8	SE	BEX	20n	754m	5.2	0.0	-4.2	-1.0	50m☐		0	7	PROM	B293	ML372
37	MCM10539F	32	8	SE	BEX	20n	754m	5.2	0.0	-4.2	-1.0	50m☐		5	C	PROM	B293	FL34
38	MCM10539L	32	8	SE	BEX	20n	754m	5.2	0.0	-4.2	-1.0	50m☐		5	C	PROM	B293	ML372
39	10139F	32	8	SE	BEX	22n	754m	5.2	0.0	-1.6%	-.96			3	8	PROM	B371	ML127r
40	10139N	32	8	SE	BEX	22n	754m	5.2	0.0	-1.6%	-.96			3	8	PROM	B371	ML132
41#	GXB10139	32	8	SE	BEX	22n	754mØ	5.2	0.0	-1.4	-1.1	50m☐		3	8	PROM	B371	
42	DM87S188J	32	8	SE	BTD	15n	700m	0.0	5.0	.80	2.0△	12m	.45	0	7	PROM	B427	ML280
43	DM87S188N	32	8	SE	BTD	15n	600m†	0.0	5.0	.80	2.0△	12m	.45	0	7	PROM	B427	ML209
44	DM87S288J	32	8	SE	BTD	15n	600m†	0.0	5.0	.80	2.0$	12m	.45	0	7	PROM	B427	ML280
45	DM87S288N	32	8	SE	BTD	15n	600m†	0.0	5.0	.80	2.0$	12m	.45	0	7	PROM	B427	ML209
46	DM77S188J	32	8	SE	BTD	20n	700m	0.0	5.0	.80	2.0△	12m	.50	5	C	PROM	B427	ML280
47	DM77S288J	32	8	SE	BTD	20n	700m	0.0	5.0	.80	2.0$	12m	.50	5	C	PROM	B427	ML280
48	DM74S188J	32	8	SE	BTD	35n	550m	0.0	5.0	.80	2.0△	16m	.45	0	7	PROM	B132	ML280
49	DM74S188N	32	8	SE	BTD	35n	550m	0.0	5.0	.80	2.0△	16m	.45	0	7	PROM	B132	ML178
50	DM74S288J	32	8	SE	BTD	35n	550m	0.0	5.0	.80	2.0$	16m	.45	0	7	PROM	B132	ML280
51	DM74S288N	32	8	SE	BTD	35n	550m	0.0	5.0	.80	2.0$	16m	.45	0	7	PROM	B132	ML178
52▼	AM27S18DC	32	8	SE	BTD	40n		0.0	5.0	.80	2.0△	40u△	4.5	0	7	PROM	B449	ML399
53▼	AM27S19DC	32	8	SE	BTD	40n		0.0	5.0	.80	2.0$	40u△	2.4	0	7	PROM	B449	ML399
54	DM54S288J	32	8	SE	BTD	40n	550m	0.0	5.0	.80	2.0$	16m	.45	5	C	PROM	B132	ML280
55	DM54S188J	32	8	SE	BTD	45n	550m	0.0	5.0	.80	2.0△	16m	.45	5	C	PROM	B132	ML280
56▼	6330-1J16	32	8	SE	BTD	50n	625m	0.0	7.0	.80	2.0△	12m	.50	0	7	PROM	PN16bw	ML280
57	6330-1J	32	8	SE	BTD	50n	625m	0.0	5.0	.80	2.0△	12m	.50	0	7	PROM	PN16cp	ML280
58▼	6331-1J16	32	8	SE	BTD	50n	625m	0.0	7.0	.80	2.0△	12m	.50	0	7	PROM	PN16bw	ML280
59	6331-1J	32	8	SE	BTD	50n	625m	0.0	5.0	.80	2.0$	12m	.50	0	7	PROM	PN16cp	ML280
60	AM27S08DC	32	8	SE	BTD	50n	500n	0.0	5.0	.80	2.0	16m	.45	0	7	PROM	B175	ML127k
61	AM27S08DM	32	8	SE	BTD	50n	500m	0.0	5.0	.80	2.0	16m	.45	5	C	PROM	B175	ML62c
62	AM27S09DC	32	8	SE	BTD	50n	550m	0.0	5.0	.80	2.0$	16m	.45	0	7	PROM	B175	ML127k
63	AM27S09DM	32	8	SE	BTD	50n	550m	0.0	5.0	.80	2.0$	16m	.45	5	C	PROM	B175	ML62c
64▼	AM27S18DM	32	8	SE	BTD	50n		0.0	5.0	.80	2.0△	40u△	4.5	5	C	PROM	B449	ML399
65▼	AM27S18FM	32	8	SE	BTD	50n		0.0	5.0	.80	2.0△	40u△	4.5	5	C	PROM	B449	FL33
66▼	AM27S19DM	32	8	SE	BTD	50n		0.0	5.0	.80	2.0$	40u△	2.4	5	C	PROM	B449	ML399
67▼	AM27S19FM	32	8	SE	BTD	50n		0.0	5.0	.80	2.0$	40u△	2.4	5	C	PROM	B449	FL33
68	N82S23B	32	8	SE	BTD	50n	385m	0.0	5.0	.85	2.0△	16m	.45	0	7	PROM	B196	ML132
69	N82S23F	32	8	SE	BTD	50n	385m	0.0	5.0	.85	2.0△	16m	.45	0	7	PROM	B196	ML127r
70	N82S23N	32	8	SE	BTD	50n	385m	0.0	5.0	.85	2.0△	16m	.45	0	7	PROM	B196	ML132
71	N82S123B	32	8	SE	BTD	50n	385m	0.0	5.0	.85	2.0$	16m	.45	0	7	PROM	B196	ML132
72	N82S123F	32	8	SE	BTD	50n	385m	0.0	5.0	.85	2.0$	16m	.45	0	7	PROM	B196	ML127r
73	N82S123N	32	8	SE	BTD	50n	385m	0.0	5.0	.85	2.0$	16m	.45	0	7	PROM	B196	ML132
74	AM27LS18DC	32	8	SE	BTD	55nØ	400m	0.0	5.0	.80	2.0△	16m	.45	0	7	PROM	B449	ML312a
75▼	5330-1J16	32	8	SE	BTD	60n	625m	0.0	7.0	.80	2.0△	12m	.50	5	C	PROM	PN16bw	ML280
76▼	5331-1J16	32	8	SE	BTD	60n	625m	0.0	7.0	.80	2.0$	12m	.50	5	C	PROM	PN16bw	ML280
77	IM5600CDE	32	8	SE	BTX	50nØ	500m	0.0	5.0	.80	2.0△	40u△	5.5	0	7	PROM	B1a	ML1a
78	IM5600CFE	32	8	SE	BTX	50nØ	1.5m%	0.0	5.0	.80	2.0△	40u△	5.5	0	7	PROM	B1a	FL76
79♦	IM5600CJE	32	8	SE	BTX	50nØ	1.5m%	0.0	5.0	.80	2.0△	40u△	5.5	0	7	PROM	B1	ML431
80♦	IM5600CPE	32	8	SE	BTX	50nØ	500m	0.0	5.0	.80	2.0△	40u△	5.5	0	7	PROM	B1	ML430
81♦	IM5600MDE	32	8	SE	BTX	50nØ	500m	0.0	5.0	.80	2.0△	100u△	5.5	5	C	PROM	B1	ML429
82♦	IM5600MFE	32	8	SE	BTX	50nØ	500m	0.0	5.0	.80	2.0△	100u△	5.5	5	C	PROM	B1	ML76
83♦	IM5600MJE	32	8	SE	BTX	50nØ	1.5m%	0.0	5.0	.80	2.0△	100u△	5.5	5	C	PROM	B1	ML431
84♦	IM5610CDE	32	8	SE	BTX	50nØ	500m	0.0	5.0	.80	2.0Ø	40u△	5.5	0	7	PROM	B1	ML429
85♦	IM5610CFE	32	8	SE	BTX	50nØ	1.5m%	0.0	5.0	.80	2.0Ø	40u△	5.5	0	7	PROM	B1	FL76
86♦	IM5610CJE	32	8	SE	BTX	50nØ	1.5m%	0.0	5.0	.80	2.0Ø	40u△	5.5	0	7	PROM	B1	ML431
87♦	IM5610CPE	32	8	SE	BTX	50nØ	500m	0.0	5.0	.80	2.0Ø	40u△	5.5	0	7	PROM	B1	ML430
88	IM5610MDE	32	8	SE	BTX	50nØ	500m	0.0	5.0	.80	2.0Ø	100u△	5.5	5	C	PROM	B1a	ML1a
89♦	IM5610MFE	32	8	SE	BTX	50nØ	500m	0.0	5.0	.80	2.0Ø	100u△	5.5	5	C	PROM	B1	FL76
90	IM5610MJE	32	8	SE	BTX	50nØ	1.5m%	0.0	5.0	.80	2.0Ø	100u△	5.5	5	C	PROM	B1a	ML396
91#	M54730S	32	8	SE	BTX	50nØ	400m	0.0	5.0	.80	2.0	16m	.45	0	7		B53	ML337
92	N8223B	32	8	SE	BTX	50n$Ø	400mØ	0.0	5.0	.80%	2.0	16m	.50	0	7		B67	ML89a
93	N8223F	32	8	SE	BTX	50n$Ø	400mØ	0.0	5.0	.80%	2.0	16m	.50	0	7		B67	ML60a
94	N8223W	32	8	SE	BTX	50n$Ø	400mØ	0.0	5.0	.80%	2.0	16m	.50	0	7		B67	FL25
95#	RC8223B	32	8	SE	BTX	50n$Ø	400mØ	0.0	5.0	.80%	2.0	9.6m	.40	5	C		B67	ML89a
96#	RC8223F	32	8	SE	BTX	50n$Ø	400mØ	0.0	5.0	.80%	2.0	9.6m	.40	5	C		B67	ML60a
97#	RC8223W	32	8	SE	BTX	50n$Ø	400mØ	0.0	5.0	.80%	2.0	9.6m	.40	5	C		B67	FL25
98#	RC82S23F	32	8	SE	BTX	65n	425m	0.0	5.0	.80	2.0△	16m	.50	5	C	PROM	B196	ML127r
99#	RC82S23N	32	8	SE	BTX	65n	425m	0.0	5.0	.80	2.0△	16m	.50	5	C	PROM	B67	ML132
100#	RC82S123F	32	8	SE	BTX	65n	425m	0.0	5.0	.80	2.0$	16m	.50	5	C	PROM	B196	ML127r
101#	RC82S123N	32	8	SE	BTX	65n	425m	0.0	5.0	.80	2.0$	16m	.50	5	C	PROM	B67	ML132
102	S82S23F	32	8	SE	BTX	65n	425m	0.0	5.0	.80	2.0△	16m	.50	5	C	PROM	B196	ML127r
103	S82S123F	32	8	SE	BTX	65n	425m	0.0	5.0	.80	2.0$	16m	.50	5	C	PROM	B196	ML127r
104	RM256A#4	32$	8$	SE	TAX	50n†	8.5m	0.0	5.0	2.0	.80			5	7	PR Non-Vol RMM	PN40A	ML14
105#	SDA2006	32	16	DC	MNG		450m	0.0	25	.50	4.0			0	7	EAROM		ML338
106	ER2050	32	16	SE	MPN	10u	238m	28	5.0	.80	3.5	1.5m	.80	0	7	Non-Vol EAROM	B237	ML252
107	NC7051	32	16	SE	MXN	4.0u	360m	30	5.0	.60	3.5	1.6m	.60	0	7	EAROM	B407	ML☐
108	ER2051	32	16	SE	MXX	3.0u	500mØ	28	5.0	.80	3.5	1.6m	.80	0	7	EAROM	B237	ML252
109	ER2051HR	32	16	SE	MXX	4.0u	500mØ	28	5.0	.60	3.5	1.6m	.80	5	C	EAROM	B237	ML325
110#	N82S2001	48	8	SC	BTX	50n	850m	0.0	5.0	.85	2.0$	9.6m	.45	0	7	16 Input Var	Z24	ML218b

SYMBOLS AND CODES EXPLAINED IN INTERPRETER

3. READ ONLY MEMORIES (ROMS)

IN ORDER OF (1)No.WDS(2)No.BITS/WD(3)OP.MODE PRG.CODE(4)STRUCT.(5)MAX ACC.TIME(6)TYPE No.

LINE No.	6 TYPE No.	ORGANIZATION 1 No. WORDS	2 BITS PER WORD	3 OP MODE PROG CODE	4 STRUCTURE CODE	5 MAX ACCESS TIME (s)	MAX OPER. POWER DISS. (W)	RATED POWER SUP. SPAN NEG. (V)	POS. (V)	INPUT LOGIC LEVELS MAX '0' (V)	MIN '1' (V)	MIN OUTPUT SINK CURRENT (A)	@ OUT (V)	OPER. TEMP. RANGE CODE -	+	GENERAL DESCRIPTION	DRAWINGS LOGIC/ BLOCK	OUTLINE
1#	N82S200N	48	8	SC	BTX	50n	850m	0.0	5.0	.85	2.0§	9.6m	.45	0	7	16 Input Var	Z24	ML290
2#	N82S201I	48	8	SC	BTX	50n	850m	0.0	5.0	.85	2.0△	9.6m	.45	0	7	16 Input Var	Z24	ML218b
3#	N82S201N	48	8	SC	BTX	50n	850m	0.0	5.0	.85	2.0△	9.6m	.45	0	7	16 Input Var	Z24	ML290
4#	RC82S200I	48	8	SC	BTX	80n	900m	0.0	5.0	.80	2.0§	9.6m	.50	5	C	16 Input Var	Z24	ML218b
5#	RC82S200N	48	8	SC	BTX	80n	900m		5.0	.80	2.0§	9.6m	.50	5	C	16 Input Var	Z24	ML199
6#	RC82S201I	48	8	SC	BTX	80n	900m	0.0	5.0	.80	2.0△	9.6m	.50	5	C	16 Input Var	Z24	ML218b
7#	RC82S201N	48	8	SC	BTX	80n	900m	0.0	5.0	.80	2.0△	9.6m	.50	5	C	16 Input Var	Z24	ML199
8	N82S106I	48	8	SE	BTD	70n	850m	0.0	5.0	.85	2.0△	4.8m	.45	0	7	16 Inp PROM	B352	ML218b
9	N82S106N	48	8	SE	BTD	70n	850m	0.0	5.0	.85	2.0△	4.8m	.45	0	7	16 Inp PROM	B352	ML290
10	N82S107I	48	8	SE	BTD	70n	850m	0.0	5.0	.85	2.0§	4.8m	.45	0	7	16 Inp PROM	B352	ML218b
11#	RC82S106I	48	8	SE	BTD	100n	900m	0.0	5.0	.80	2.0△	4.8m	.50	5	C	16 Inp PROM	B352	ML218b
12#	RC82S107I	48	8	SE	BTD	100n	900m	0.0	5.0	.80	2.0§	4.8m	.50	5	C	16 Inp PROM	B352	ML218b
13	S82S106I	48	8	SE	BTD	100n	900m	0.0	5.0	.80	2.0△	4.8m	.50	5	C	16 Inp PROM	B352	ML218b
14	S82S107I	48	8	SE	BTD	100n	900m	0.0	5.0	.80	2.0§	4.8m	.50	5	C	16 Inp PROM	B352	ML218b
15	RM256A#3	64$	4$	SE	TAX	50n†	8.5m	0.0	5.0	2.0	.80			5	7	PR Non-Vol RMM	PN40A	ML14
16	MCM5003AL	64	8	SE	BTX	120n	600m	0.0	5.0	.45%	2.5△	12m	.45	0	7	PROM	B61	ML150a
17	MCM5003L	64	8	SE	BTX	120n	600m	0.0	5.0	.45%	2.5△	12m	.45	0	7	PROM	B61	ML319
18	MCM5004AL	64	8	SE	BTX	120n	600m	0.0	5.0	.45%	2.5	12m	.45	0	7	PROM	B61	ML150a
19	MCM5004L	64	8	SE	BTX	120n	600m	0.0	5.0	.45%	2.5	12m	.45	0	7	PROM	B61	ML319
20	MCM5303AL	64	8	SE	BTX	120n	600m	0.0	5.0	.50%	2.5△	12m	.50	5	C	PROM	B61	ML150a
21	MCM5303L	64	8	SE	BTX	120n	600m	0.0	5.0	.50%	2.5△	12m	.50	5	C	PROM	B61	ML319
22	MCM5304AL	64	8	SE	BTX	120n	600m	0.0	5.0	.50%	2.5	12m	.50	5	C	PROM	B61	ML150a
23	MCM5304L	64	8	SE	BTX	120n	600m	0.0	5.0	.50%	2.5	12m	.50	5	C	PROM	B61	ML319
24	JANM38510/20101BJB	64	8	SE	BTX	140n$	575mØ	0.0	5.0	.80	2.0	30mØ		5	C	PROM	B105	ML126
25	JANM38510/20101CJB	64	8	SE	BTX	140n$	575mØ	0.0	5.0	.80	2.0	30mØ		5	C	PROM	B105	ML126
26	NC7055	64	8	SE	MXN	4.0u	300m	30	5.0	.60	3.5§	1.6m	.60	0	7	EAROM	B409	MLØ
27	ER2055	64	8	SE	MXX	4.0u	500mØ	28	5.0	.80	3.5	1.6m	.80	0	7	EAROM	B401	ML242
28	HRM2048	64	32	SE	TAX	240n†	400m†	0.0	5.0	.80	2.0			0	7	Programmable	B91	ML113
29	HRM2048#6	64$	32$	SE	TAX	500n	640m♦	0.0	5.0	2.0	.80			0	7	PR Non-Vol RMM	B91	ML113
30	NC7400	100	14	SE	MNX	20u$	300m	35	0.0	.30	-15			2	7	EAROM	B236	
31#	M5G1400P	100	14	SE	MPN	20u	333m	35	0.0	-8.0	-1.0			0	7	EAROM	B236	ML362
32	ER1400	100	14	SE	MPN	3.0m	300m	35	0.0	-8.0	-1.0			0	7	Serial I/O	B236	TO8
33	RM256A#2	128$	2$	SE	TAX	50n†	8.5m	0.0	5.0	2.0	.80			5	7	PR Non-Vol RMM	PN40A	ML14
34	NC7053L	128	8		MNX	1.1m△†	300m♦	5.0	5.0	.80	2.4	10u△		0	7	EAROM	Z33	
35	NC7053M	128	8		MNX	1.1m△†	300m♦	5.0	5.0	.80	2.4	10u△		5	C	EAROM	Z33	
36	NC7053P	128	8		MNX	1.1m△†	300m♦	5.0	5.0	.80	2.4	10u△		0	7	EAROM	Z33	
37	UC65253K#1	128$	8	SC	MPX	900n	15m♦	5.0	5.0	.80	2.6	1.6m	.40	5	C		B9k	ML31a
38	UC65254K#1	128$	8	SC	MPX	900n	150m♦	5.0	5.0	.80	2.6	1.6m	.40	5	C		B9k	FL3a
39	UC75253K#1	128$	8	SC	MPX	900n	150m♦	5.0	5.0	.80	2.6	1.6m	.40	0	7		B9k	ML31a
40	UC75254K#1	128$	8	SC	MPX	900n	150m♦	5.0	5.0	.80	2.6	1.6m	.40	0	7		B9k	ML31a
41	3501-9-6G	128	8	SC	MPX	4.2u	215mØ	27	0.0	-2.0	-9.0	1.0u△	-15	0	7		B19	ML51
42	UA2525D#1	128	8	SC	MXX	900n	360m	10	0.0	.80♦	2.7	1.6m	.40	5	C		B9	ML31a
43	UA3525D#1	128	8	SC	MXX	900n	360m	10	0.0	.80♦	2.7	1.6m	.40	2	7		B9	ML31a
44	UA3525F#1	128	8	SC	MXX	900n	360m	10	0.0	.80♦	2.7	1.6m	.40	2	7		B9	FL3a
45	HRM2048#5	128$	16$	SE	TAX	500n	640m♦	0.0	5.0	2.0	.80			0	7	PR Non-Vol RMM	B91	ML113
46	RM256A#1	256$	1$	SE	TAX	50n†	8.5m	0.0	5.0	2.0	.80			5	7	PR Non-Vol RMM	PN40A	ML14
47	TBP24S10J	256	4	S	BTD	35n†	375m†	0.0	5.0	.80	2.0§	16m#		0	7	PROM	PN16hk	MLØ
48	TBP24S10N	256	4	S	BTD	35n†	375m†	0.0	5.0	.80	2.0§	16m#		0	7	PROM	PN16hk	MLØ
49▼	TBP24SA10J	256	4	S	BTD	35n†	375m†	0.0	5.0	.80	2.0△	16m#		0	7	PROM	PN16hk	MLØ
50▼	TBP24SA10N	256	4	S	BTD	35n†	375m†	0.0	5.0	.80	2.0△	16m#		0	7	PROM		MLØ
51	TBP14S10J	256	4	S	BTD	65n	500m†	0.0	5.0	.80	2.0§	16m#		0	7	PROM	PN16hk	MLØ
52	TBP14S10N	256	4	S	BTD	65n	500m†	0.0	5.0	.80	2.0§	16m#		0	7	PROM	PN16hk	MLØ
53	TBP14SA10J	256	4	S	BTD	65n	500m†	0.0	5.0	.80	2.0△	16m#		0	7	PROM	PN16hk	MLØ
54	TBP14SA10N	256	4	S	BTD	65n	500m†	0.0	5.0	.80	2.0△	16m#		0	7	PROM	PN16hk	MLØ
55	TBP14S10MJ	256	4	S	BTD	75n	500m†	0.0	5.0	.80	2.0§	16m#		5	C	PROM	PN16hk	MLØ
56#	M54700K	256	4	S	BXX	60n	450m†	0.0	5.0		△			0	7	EPROM;Fld Prg		DLØ
57#	M54700P	256	4	S	BXX	60n	450m†	0.0	5.0		△			0	7	EPROM;Fld Prg		DLØ
58▼#	HD14524B	256	4	S	MCX	190n		0.0	15	.01%	14.9	3.0m	1.5	4	8		B120	
59#	SFC70301K	256	4	SC	BTC	60n	650m	0.0	5.0	.85	2.0	15m	.45	0	7		B80	ML139
60#	SFC70301KM	256	4	SC	BTC	60n	650m	0.0	5.0	.85	2.0	15m	.45	5	C		B80	ML139
61#	SFC70301KT	256	4	SC	BTC	60n	650mØ	0.0	5.0	.85	2.0	15m	.45	2	8		B80	ML139
62	93457DC	256	4	SC	BTD	45n	550m	0.0	5.0	.80	2.0△	16m	.45	0	7		B123	ML1k
63	93457FC	256	4	SC	BTD	45n	550m	0.0	5.0	.80	2.0△	16m	.45	0	7		B123	FL14
64	93457PC	256	4	SC	BTD	45n	550m	0.0	5.0	.80	2.0△	16m	.45	0	7		B123	ML170
65	93467DC	256	4	SC	BTD	45n	550m♦	0.0	5.0	.80	2.0§	16m	.45	0	7		B123	ML1k
66	93467FC	256	4	SC	BTD	45n	550m♦	0.0	5.0	.80	2.0§	16m	.45	0	7		B123	FL14
67	93467PC	256	4	SC	BTD	45n	550m♦	0.0	5.0	.80	2.0§	16m	.45	0	7		B123	ML170
68	D3301A	256	4	SC	BTD	45n	625m	0.0	5.0	.85	2.0	15m	.45	0	7		PN16cc	ML127a
69	P3301A	256	4	SC	BTD	45n	656m	0.0	5.0	.85	2.0	15m	.45	0	7		PN16bz	ML4j
70	N82S226N	256	4	SC	BTD	50n	600m	0.0	5.0	.85	2.0△	16m	.45	0	7	ROM	B198	ML132
71	N82S229N	256	4	SC	BTD	50n	600m	0.0	5.0	.85	2.0§	16m	.45	0	7	ROM	B198	ML132
72	93457DM	256	4	SC	BTD	60n	550m	0.0	5.0	.80	2.0△	16m	.45	5	C		B123	ML1k
73	93457FM	256	4	SC	BTD	60n	550m	0.0	5.0	.80	2.0△	16m	.45	5	C		B123	FL14
74	93467DM	256	4	SC	BTD	60n	550m♦	0.0	5.0	.80	2.0§	16m	.45	5	C		B123	ML1k
75	93467FM	256	4	SC	BTD	60n	550m♦	0.0	5.0	.80	2.0§	16m	.45	5	C		B123	FL14
76	P3301	256	4	SC	BTD	90n	650m	0.0	5.0	.85	2.0	15m	.45	0	7		PN16bz	ML10b
77	N82S26F	256	4	SC	BTX	35n†	685m	0.0	5.0	2.0	.85	16m	.50	0	7	PROM	B87	ML127m
78	N82S29F	256	4	SC	BTX	35n†	760m	0.0	5.0	2.0	.85	16m	.50	0	7	PROM	B87	ML127m
79	N82S126I	256	4	SC	BTX	50n	685m	0.0	5.0	.85	2.0	16m	.50	0	7	PROM	PN16bz	ML107
80	N82S129I	256	4	SC	BTX	50n	685m	0.0	5.0	.85	2.0	16m	.50	0	7	PROM	PN16bz	ML107
81	N82S226B	256	4	SC	BTX	50n	600m	0.0	5.0	.85	2.0△	16m	.50	0	7		B198	ML132
82	N82S226F	256	4	SC	BTX	50n	600m	0.0	5.0	.85	2.0△	16m	.50	0	7		B198	ML127m
83	N82S229B	256	4	SC	BTX	50n	600m	0.0	5.0	.85	2.0§	16m	.50	0	7		B198	ML132
84	N82S229F	256	4	SC	BTX	50n	600m	0.0	5.0	.85	2.0§	16m	.50	0	7		B198	ML127m
85#	RC82S226F	256	4	SC	BTX	70n	625m	0.0	5.0	.80	2.0△	16m	.50	5	C		B198	ML127m
86#	RC82S229F	256	4	SC	BTX	70n	625m	0.0	5.0	.80	2.0§	16m	.50	5	C		B198	ML127m
87	S82S226F	256	4	SC	BTX	70n	625m	0.0	5.0	.80	2.0△	16m	.50	5	C		B198	ML127m
88	S82S229F	256	4	SC	BTX	70n	625m	0.0	5.0	.80	2.0§	16m	.50	5	C		B198	ML127m
89	MCM14524AL	256	4	SC	MCX	1.2uØ	300u♦Ø	0.0	15	.01%Ø	14.9	3.4m	1.5	5	C		B120	ML372
90	MCM14524CL	256	4	SC	MCX	1.2uØ	3.0m♦Ø	0.0	15	.01%Ø	14.9	3.0m	1.5	4	8		B120	ML372
91	MCM14524CP	256	4	SC	MCX	1.2uØ	3.0m♦Ø	0.0	15	.01%Ø	14.9	3.0m	1.5	4	8		B120	ML145
92	N2410I	256	4	SC	MPG	500n†	800mØ	12	12	4.0	10			2	7		B27	ML84
93	N2411I	256	4	SC	MPG	500n†	800mØ	12	12	4.0	10			2	7		B27	ML84
94	UC65253K#3	256$	4	SC	MPX	900n	150m♦	5.0	5.0	.80	2.6	1.6m	.40	5	C		B9n	ML31a
95	UC65254K#3	256$	4	SC	MPX	900n	150m♦	5.0	5.0	.80	2.6	1.6m	.40	5	C		B9n	FL3a
96	UC75253K#3	256$	4	SC	MPX	900n	150m♦	5.0	5.0	.80	2.6	1.6m	.40	0	7		B9n	ML31a
97	UC75254K#3	256$	4	SC	MPX	900n	150m♦	5.0	5.0	.80	2.6	1.6m	.40	0	7		B9n	ML31a
98	UA2525D#2	256	4	SC	MXX	900n	360m	10	0.0	.80♦	2.7	1.6m	.40	5	C		B9	ML31a
99	UA3525D#2	256	4	SC	MXX	900n	360m	10	0.0	.80♦	2.7	1.6m	.40	2	7		B9	ML31a
100	UA3525F#2	256	4	SC	MXX	900n	360m	10	0.0	.80♦	2.7	1.6m	.40	2	7		B9	FL3a
101	F10416DC	256	4	SE	BEX	15n△†		5.2	0.0	-1.4	-1.1			0	7	PROM	B268	ML1k
102	F10416FC	256	4	SE	BEX	15n△†		5.2	0.0	-1.4	-1.1			0	7	PROM	B268	FL14
103	F100416DC	256	4	SE	BEX	15n△†		5.2	0.0	-1.4	-1.1			0	7	PROM	B268	ML1k
104	F100416FC	256	4	SE	BEX	15n△†		5.2	0.0	-1.4	-1.1			0	7	PROM	B268	FL14
105#	10149F	256	4	SE	BEX	20n	750m	5.2	0.0	-1.5	-1.1	20m	-1.1	3	8	Field Program	B424	ML127r
106#	GXB10149	256	4	SE	BEX	20n	780mØ	5.2	0.0	-1.4	-1.1	40mØ		3	8	PROM	B266	ML127x
107	MCM10149F	256	4	SE	BEX	30n	540m†	5.2	0.0	-.96	-1.8	50mØ		0	7	PROM	B145	FL34
108	MCM10149L	256	4	SE	BEX	30n	540m†	5.2	0.0	-.96	-1.8	50mØ		0	7	PROM	B145	ML372

SYMBOLS AND CODES EXPLAINED IN INTERPRETER

3. READ ONLY MEMORIES (ROMS)

IN ORDER OF (1)No.WDS(2)No.BITS/WD(3)OP.MODE PRG.CODE(4)STRUCT.(5)MAX ACC.TIME(6)TYPE No.

LINE No.	6 TYPE No.	ORGANIZATION 1 No. WORDS	2 BITS PER WORD	3 OP MODE PROG CODE	4 STRUCTURE CODE	5 MAX ACCESS TIME (s)	MAX OPER. POWER DISS. (W)	RATED POWER SUP. SPAN NEG. (V)	RATED POWER SUP. SPAN POS. (V)	INPUT LOGIC LEVELS MAX '0' (V)	INPUT LOGIC LEVELS MIN '1' (V)	MIN OUTPUT SINK CURRENT (A)	MIN OUTPUT SINK CURRENT @ OUT (V)	OPER. TEMP. RANGE CODE -	OPER. TEMP. RANGE CODE +	GENERAL DESCRIPTION	DRAWINGS LOGIC/ BLOCK	DRAWINGS OUTLINE
1	MCM10549F	256	4	SE	BEX	30n	540mt	5.2	0.0	-.93	-1.8	50m☑		5	C	PROM	B145	FL34
2	MCM10549L	256	4	SE	BEX	30n	540mt	5.2	0.0	-.93	-1.8	50m☑		5	C	PROM	B145	ML372
3	93417DC	256	4	SE	BTD	45n	550m	0.0	5.0	.80	2.0	16m	.45	0	7	Field Program	B123	ML98a
4	93417FC	256	4	SE	BTD	45n	550m	0.0	5.0	.80	2.0△	16m	.45	0	7	Field Program	B123	FL14
5	93417PC	256	4	SE	BTD	45n	550m	0.0	5.0	.80	2.0△	16m	.45	0	7	Field Program	B123	ML170
6	93427DC	256	4	SE	BTD	45n	550m	0.0	5.0	.80	2.0§	16m	.45	0	7	Field Program	B123	ML98a
7	93427FC	256	4	SE	BTD	45n	550m	0.0	5.0	.80	2.0§	16m	.45	0	7	Field Program	B123	FL14
8	93427PC	256	4	SE	BTD	45n	550m	0.0	5.0	.80	2.0§	16m	.45	0	7	Field Program	B123	ML170
9	AM27S20DC	256	4	SE	BTD	45nØ	650m	0.0	5.0	.80	2.0△	16m	.45	0	7	PROM	B446	ML312a
10	AM27S21DC	256	4	SE	BTD	45nØ	650m	0.0	5.0	.80	2.0§	16m	.45	0	7	PROM	B446	ML312a
11#	TM601	256	4	SE	BTD	45n	550m	0.0	5.0	.80	2.0△	16m	.45	0	7	Field Program	B123	ML170
12#	TM621	256	4	SE	BTD	45n	550m	0.0	5.0	.80	2.0§	16m	.45	0	7	Field Program	B123	ML170
13	DM74S287J	256	4	SE	BTD	50n	650m	0.0	5.0	.80	2.0§	16m	.45	0	7	PROM	B434	ML280
14	DM74S287N	256	4	SE	BTD	50n	650m	0.0	5.0	.80	2.0§	16m	.45	0	7	PROM	B434	ML280
15	DM74S387J	256	4	SE	BTD	50n	650m	0.0	5.0	.80	2.0△	16m	.45	0	7	PROM	B434	ML280
16	DM74S387N	256	4	SE	BTD	50n	650m	0.0	5.0	.80	2.0△	16m	.45	0	7	PROM	B434	ML280
17▼	6300-1J16	256	4	SE	BTD	55n	650m	0.0	7.0	.80	2.0△	16m	.50	0	7	PROM	PN16hm	ML280
18▼	6301-1J16	256	4	SE	BTD	55n	650m	0.0	7.0	.80	2.0§	16m	.50	0	7	PROM	PN16hm	ML280
19	93417DM	256	4	SE	BTD	60n	550m	0.0	5.0	.80	2.0	16m	.45	5	C	Field Program	B123	ML98a
20	93417FM	256	4	SE	BTD	60n	550m	0.0	5.0	.80	2.0△	16m	.45	5	C	Field Program	B123	FL14
21	93427DM	256	4	SE	BTD	60n	550m	0.0	5.0	.80	2.0§	16m	.45	5	C	Field Program	B123	ML98a
22	93427FM	256	4	SE	BTD	60n	550m	0.0	5.0	.80	2.0§	16m	.45	5	C	Field Program	B123	FL14
23	AM27S10DC	256	4	SE	BTD	60n	550m	0.0	5.0	.80	2.0	16	.45	0	7	PROM	B176	ML127k
24	AM27S10DM	256	4	SE	BTD	60n	550m	0.0	5.0	.80	2.0	16	.45	5	C	PROM	B176	ML62c
25	AM27S11DC	256	4	SE	BTD	60n	600m	0.0	5.0	.80	2.0§	16	.45	0	7	PROM	B176	ML127k
26	AM27S11DM	256	4	SE	BTD	60n	600m	0.0	5.0	.80	2.0§	16	.45	5	C	PROM	B176	ML62c
27	AM27S20DM	256	4	SE	BTD	60nØ	650m	0.0	5.0	.80	2.0△	16m	.45	5	C	PROM	B446	ML312a
28	AM27S20FM	256	4	SE	BTD	60nØ	650m	0.0	5.0	.80	2.0△	16m	.45	5	C	PROM	B446	FL33b
29	AM27S21DM	256	4	SE	BTD	60nØ	650m	0.0	5.0	.80	2.0§	16m	.45	5	C	PROM	B446	ML312a
30	AM27S21FM	256	4	SE	BTD	60nØ	650m	0.0	5.0	.80	2.0§	16m	.45	5	C	PROM	B446	FL33b
31	DM54S287J	256	4	SE	BTD	60n	650m	0.0	5.0	.80	2.0§	16m	.50	5	C	PROM	B434	ML280
32	DM54S387J	256	4	SE	BTD	60n	650m	0.0	5.0	.80	2.0△	16m	.50	5	C	PROM	B434	ML280
33▼	5300-1J16	256	4	SE	BTD	75n	650m	0.0	7.0	.80	2.0△	16m	.50	5	C	PROM	PN16hm	ML280
34▼	5301-1J16	256	4	SE	BTD	75n	650m	0.0	7.0	.80	2.0§	16m	.50	5	C	PROM	PN16hm	ML280
35	JANM38510/20301BEA	256	4	SE	BTD	75n$	650m	0.0	5.0	.80	2.0△	12m	.50	5	C	PROM	B358	ML143
36	JANM38510/20301BEB	256	4	SE	BTD	75n$	650m	0.0	5.0	.80	2.0△	12m	.50	5	C	PROM	B358	ML143
37	JANM38510/20301BEC	256	4	SE	BTD	75n$	650m	0.0	5.0	.80	2.0△	12m	.50	5	C	PROM	B358	ML143
38	JANM38510/20301BFC	256	4	SE	BTD	75n$	650m	0.0	5.0	.80	2.0△	12m	.50	5	C	PROM	B358	FL31
39	JANM38510/20301CEC	256	4	SE	BTD	75n$	650m	0.0	5.0	.80	2.0△	12m	.50	5	C	PROM	B358	ML143
40	JANM38510/20301CFA	256	4	SE	BTD	75n$	650m	0.0	5.0	.80	2.0△	12m	.50	5	C	PROM	B358	FL31
41	JANM38510/20301CFB	256	4	SE	BTD	75n$	650m	0.0	5.0	.80	2.0△	12m	.50	5	C	PROM	B358	FL31
42	JANM38510/20301CFC	256	4	SE	BTD	75n$	650m	0.0	5.0	.80	2.0△	12m	.50	5	C	PROM	B358	FL31
43	JANM38510/20302BEA	256	4	SE	BTD	75n$	650m	0.0	5.0	.80	2.0§	12m	.50	5	C	PROM	B358	ML143
44	JANM38510/20302BEB	256	4	SE	BTD	75n$	650m	0.0	5.0	.80	2.0§	12m	.50	5	C	PROM	B358	ML143
45	JANM38510/20302BEC	256	4	SE	BTD	75n$	650m	0.0	5.0	.80	2.0§	12m	.50	5	C	PROM	B358	ML143
46	JANM38510/20302BFC	256	4	SE	BTD	75n$	650m	0.0	5.0	.80	2.0§	12m	.50	5	C	PROM	B358	FL31
47	JANM38510/20302CEA	256	4	SE	BTD	75n$	650m	0.0	5.0	.80	2.0§	12m	.50	5	C	PROM	B358	ML143
48	JANM38510/20302CEB	256	4	SE	BTD	75n$	650m	0.0	5.0	.80	2.0§	12m	.50	5	C	PROM	B358	ML143
49	JANM38510/20302CEC	256	4	SE	BTD	75n$	650m	0.0	5.0	.80	2.0§	12m	.50	5	C	PROM	B358	ML143
50	JANM38510/20302CFC	256	4	SE	BTD	75n$	650m	0.0	5.0	.80	2.0§	12m	.50	5	C	PROM	B358	FL31
51	N82S27F	256	4	SE	BTX	40n	700m	0.0	5.0	.80	2.0△	32m	.50	0	7	PROM	B198	ML127m
52	N82S126B	256	4	SE	BTX	50n	600m	0.0	5.0	.85	2.0△	16m	.50	0	7	PROM	B198	ML132
53	N82S126F	256	4	SE	BTX	50n	600m	0.0	5.0	.85	2.0△	16m	.45	0	7	PROM	B198	ML127m
54#	N82S126N	256	4	SE	BTX	50n	600m	0.0	5.0	.85	2.0△	16m	.50	0	7	PROM	B198	ML127r
55	N82S129B	256	4	SE	BTX	50n	600m	0.0	5.0	.85	2.0§	16m	.50	0	7	PROM	B198	ML132
56	N82S129F	256	4	SE	BTX	50n	600m	0.0	5.0	.85	2.0§	16m	.45	0	7	PROM	B198	ML127r
57	N82S129N	256	4	SE	BTX	50n	600m	0.0	5.0	.85	2.0§	16m	.45	0	7	PROM	B198	ML132
58▼#	RC82S126F	256	4	SE	BTX	50n	600m	0.0	5.0	.85	2.0△	16m	.45	0	7	PROM	B198	ML127m
59▼#	RC82S129F	256	4	SE	BTX	50n	600m	0.0	5.0	.85	2.0§	16m	.45	0	7	PROM	B198	ML127r
60	IM5603ACDE	256	4	SE	BTX	60nØ	650m	0.0	5.0	.80	2.0△	40u△	5.5	0	7	PROM	B412	ML1
61	IM5603ACFE	256	4	SE	BTX	60nØ	439u%	0.0	5.0	.80	2.0△	40u△	5.5	0	7	PROM	B412	FL76
62▼	IM5603ACJE	256	4	SE	BTX	60nØ	439u%	0.0	5.0	.80	2.0△	40u△	55	0	7	PROM	B412	ML396
63	IM5603ACPE	256	4	SE	BTX	60nØ	439u%	0.0	5.0	.80	2.0△	40u△	5.5	0	7	PROM	B412	ML399
64	IM5603AMJE	256	4	SE	BTX	60nØ	439u%	0.0	5.0	.80	2.0△	100u△	5.5	5	C	PROM	B412	ML396
65▼	IM5603CDE#	256	4	SE	BTX	60nØ	650m	0.0	5.0	.80	2.0△	16m	.30	0	7	PROM	B82	ML429
66▼	IM5603MDE#	256	4	SE	BTX	60nØ	650m	0.0	5.0	.80	2.0△	16m	.30	5	C	PROM	B82	ML429
67	IM5623ACDE	256	4	SE	BTX	60nØ	650m	0.0	5.0	.80	2.0Ø	40u△	5.5	0	7	PROM	B412	ML1
68	IM5623ACFE	256	4	SE	BTX	60nØ	439u%	0.0	5.0	.80	2.0Ø	40u△	5.5	0	7	PROM	B412	FL76
69	IM5623ACJE	256	4	SE	BTX	60nØ	439u%	0.0	5.0	.80	2.0Ø	40u△	5.5	0	7	PROM	B412	ML396
70	IM5623ACPE	256	4	SE	BTX	60nØ	439u%	0.0	5.0	.80	2.0Ø	40u△	5.5	0	7	PROM	B412	ML399
71	IM5623AMDE	256	4	SE	BTX	60nØ	650m	0.0	5.0	.80	2.0Ø	100u△	5.5	5	C	PROM	B412	ML1
72	IM5623AMFE	256	4	SE	BTX	60nØ	650m	0.0	5.0	.80	2.0Ø	100u△	5.5	5	C	PROM	B412	FL27
73	IM5623AMJE	256	4	SE	BTX	60nØ	439u%	0.0	5.0	.80	2.0Ø	100u△	5.5	5	C	PROM	B412	ML396
74♦	IM5623CDE	256	4	SE	BTX	60nØ	650m	0.0	5.0	.80	2.0Ø	16m	.45	0	7	PROM	B82	ML429
75▼	IM5623CFE	256	4	SE	BTX	60nØ	650m	0.0	5.0	.80	2.0Ø	16m	.30	0	7	PROM	B82	FL76
76▼	IM5623CPE	256	4	SE	BTX	60nØ	650m	0.0	5.0	.80	2.0Ø	16m	.30	0	7	PROM	B82	ML430
77♦	IM5623MDE	256	4	SE	BTX	60nØ	650m	0.0	5.0	.80	2.0Ø	16m	.45	5	C	PROM	B82	ML429
78♦	IM5623MFE	256	4	SE	BTX	60nØ	650m	0.0	5.0	.80	2.0Ø	16m	.45	5	C	PROM	B82	FL76
79#	uPB403D	256	4	SE	BTX	60nØ	650m	.50	7.0	.80	2.0	16m	.45	2	7		B412	ML60d
80	S82S126F	256	4	SE	BTX	70n	625m	0.0	5.0	.80	2.0△	16m	.50	5	C	PROM	B198	ML127r
81	S82S129F	256	4	SE	BTX	70n	625m	0.0	5.0	.80	2.0§	16m	.50	5	C	PROM	B198	ML127r
82	IM5603AMDE	256	4	SE	BTX	80nØ	650m	0.0	5.0	.80	2.0	100u△	5.5	5	C	PROM	B412	ML1
83	IM5603AMFE	256	4	SE	BTX	80nØ	650m	0.0	5.0	.80	2.0	100u△	5.5	5	C	PROM	B412	FL27
84#	MSL8520A	256	4	SE	BTX	150n$	550m	0.0	5.0	.80	2.0△	16m	.40	0	7	PROM	B282	ML98
85#	MSL8521A	256	4	SE	BTX	150n$	550m	0.0	5.0	.80	2.0§	16m	.40	0	7	PROM	B282	ML98
86	HM6661A2	256	4	SE	MCG	250n	150m	0.0	10	2.0	7.0§			5	C	PROM		
87	HM6661A9	256	4	SE	MCG	250n	150m	0.0	10	2.0	7.0§			4	8	PROM		
88	HM6611A2	256	4	SE	MCG	400n	25m	0.0	10	2.0	7.0§			5	C	PROM	B375	
89	HM6611A9	256	4	SE	MCG	400n	25m	0.0	10	2.0	7.0§			4	8	PROM	B375	
90	HM6661-2	256	4	SE	MCG	400n	25m	0.0	5.0	.80	3.0§			5	C	PROM		
91	HM6661-9	256	4	SE	MCG	400n	25m	0.0	5.0	.80	3.0§			4	8	PROM		
92	HM6611-2	256	4	SE	MCG	500n	10m	0.0	5.0	2.0	3.0§			5	C	PROM	B375	
93	HM6611-9	256	4	SE	MCG	500n	10m	0.0	5.0	2.0	3.0§			4	8	PROM	B375	
94	HM6661-5	256	4	SE	MCG	750n	25m	0.0	5.0	.80	3.0§			0	7	PROM		

3. READ ONLY MEMORIES (ROMS)

IN ORDER OF (1)No.WDS(2)No.BITS/WD(3)OP.MODE PRG.CODE(4)STRUCT.(5)MAX ACC.TIME(6)TYPE No.

LINE No.	6 TYPE No.	ORGANIZATION 1 No. WORDS	2 BITS PER WORD	3 OP MODE PROG CODE	4 STRUCTURE CODE	5 MAX ACCESS TIME (s)	MAX OPER. POWER DISS. (W)	RATED POWER SUP. SPAN NEG. (V)	POS. (V)	INPUT LOGIC LEVELS MAX '0' (V)	MIN '1' (V)	MIN OUTPUT SINK CURRENT (A)	@ OUT (V)	OPER. TEMP. RANGE CODE -	+	GENERAL DESCRIPTION	DRAWINGS LOGIC/ BLOCK	OUTLINE
1	HM6611-5	256	4	SE	MCG	800n	10m	0.0	5.0	2.0	3.0§			0	7	PROM	B375	
2	TBP28L22J	256	8	S	BTD	45n†	300m†	0.0	5.0	.80	2.0§	8.0m#		0	7	PROM	PN20ae	ML☑
3	TBP28L22N	256	8	S	BTD	45n†	300m†	0.0	5.0	.80	2.0§	8.0m#		0	7	PROM	PN20ae	ML☑
4	TBP18S22J	256	8	S	BTD	70n	550m†	0.0	5.0	.80	2.0§	16m#		0	7	PROM	PN20ae	ML☑
5	TBP18S22N	256	8	S	BTD	70n	550m†	0.0	5.0	.80	2.0§	16m#		0	7	PROM	PN20ae	ML☑
6	TBP18SA22J	256	8	S	BTD	70n	550m†	0.0	5.0	.80	2.0△	16m#		0	7	PROM	PN20ae	ML☑
7	TBP18SA22N	256	8	S	BTD	70n	550m†	0.0	5.0	.80	2.0△	16m#		0	7	PROM	PN20ae	ML☑
8	TBP18S22MJ	256	8	S	BTD	80n	550m†	0.0	5.0	.80	2.0§	16m#		5	C	PROM	PN20ae	ML☑
9	CDP18U42CD	256	8	S	MNG	1.0u	20m†	0.0	5.0	1.5	3.5§	1.6m	0.4	4	8	EPROM	A498	
10	CDP1842CD	256	8	S	MNG	1.0u	20m†	0.0	5.0	.05	4.95§	1.4m	0.4	4	8	EEPROM	A498	
11	N82S214F	256	8	SC	BTD	60n	650m†	0.0	5.0	.85	2.0§	9.6m	.50	0	7	ROM	B199b	ML133
12	N82S214I	256	8	SC	BTD	60n	875m	0.0	5.0	.85	2.0§	9.6m	.50	0	7		B199b	ML150b
13	N82S214N	256	8	SC	BTD	60n	650m†	0.0	5.0	.85	2.0§	9.6m	.50	0	7	ROM	B199b	ML135
14#	RC82S214I	256	8	SC	BTD	90n	925m	0.0	5.0	.80	2.0§	9.6m	.50	5	C		B199b	ML150b
15	S82S214F	256	8	SC	BTD	90n	650m†	0.0	5.0	.80	2.0§	9.6m	.50	5	C	ROM	B199b	ML133
16	S82S214I	256	8	SC	BTD	90n	925m	0.0	5.0	.80	2.0§	9.6m	.50	5	C		B199b	ML150b
17	N8204Y	256	8	SC	BTX	75n	850m	0.0	5.0	.85*	2.0†§	9.6m	.50	0	7		B32a	ML47e
18	4735BDC	256	8	SC	MCX	152n§†	15m♦	0.0	10	3.0	7.0§	1.2m	.50	4	8	ROM	B273	ML133g
19	4735BDM	256	8	SC	MCX	152n§†	15m♦	0.0	10	3.0	7.0§	1.2m	.50	5	C	ROM	B273	ML133g
20	4735BFC	256	8	SC	MCX	152n§†	15m♦	0.0	10	3.0	7.0§	1.2m	.50	4	8	ROM	B273	FL47
21	4735BFM	256	8	SC	MCX	152n§†	15m♦	0.0	10	3.0	7.0§	1.2m	.50	5	C	ROM	B273	FL47
22	4735BPC	256	8	SC	MCX	152n§†	15m♦	0.0	10	3.0	7.0§	1.2m	.50	4	8	ROM	B273	ML216
23	3512-9-7C	256	8	SC	MNG	600n	1.0u	12	5.0	.80	4.0	2.4m	.40	0	7		B46	ML52
24#	SFF70611KM#1	256	8	SC	MPA	700n	430m	12	5.0	.80	3.0	2.0m†	6.0	5	C		B119	ML95
25#	SFF70611KT#1	256	8	SC	MPA	700n	430m	12	5.0	.80	3.0	2.0m†	1.0	2	8		B119	ML95
26	MM5230J#1	256§	8§	SC	MPX	725nØ	480mØ	12	12	10*	4.0#			2	7		B26	ML133a
27	MM5230N	256§	8§	SC	MPX	725nØ	480mØ	12	12	10*	4.0#	1.6m	.40	2	7	EPROM	B26	ML183
28	MM5230N#1	256§	8§	SC	MPX	725nØ	480mØ	12	12	10*	4.0#			2	7		B26	ML183
29	UC7523#1	256§	8	SC	MPX	1.0u	420mØ	12	12	10*	4.0#			2	7		PN24w	ML31b
30	3507-9-6G	256	8	SC	MPX	1.7u	800mØ	27	0.0	-2.0	-9.0			0	7		B45	ML51
31	3512-9-6G	256	8	SC	MXG	500n†	575m†	12	5.0	.85	4.0			0	7		B46	ML51
32	UA2548#1	256	8	SC	MXX	900n	600m	20	0.0	.80♦	2.7	1.6m	.40	5	C		B9a	ML31a
33	UA3548#1	256	8	SC	MXX	900n	600m	20	0.0	.80♦	2.7	1.6m	.40	2	7		B9a	ML31a
34	N82S114I	256	8	SE	BTD	60n	875m	0.0	5.0	.85	2.0§	9.6m	.50	0	7	PROM	B199	ML150b
35▼	6308-1J20	256	8	SE	BTD	70n	850m	0.0	7.0	.80	2.0△	16m	.50	0	7	PROM	PN20m	ML274
36	6308-1J	256	8	SE	BTD	70n	775m	0.0	5.0	.80	2.0△	16m	.50	0	7	PROM	PN20m	ML274
37▼	6309-1J20	256	8	SE	BTD	70n	850m	0.0	7.0	.80	2.0§	16m	.50	0	7	PROM	PN20m	ML274
38	6309-1J	256	8	SE	BTD	70n	775m	0.0	5.0	.80	2.0§	16m	.50	0	7	PROM	PN20m	ML274
39▼	6335-1J24	256	8	SE	BTD	70n	850m	0.0	7.0	.80	2.0△	16m	.50	0	7	PROM	PN24ei	ML276
40▼	6336-1J24	256	8	SE	BTD	70n	850m	0.0	7.0	.80	2.0§	16m	.50	0	7	PROM	PN24ei	ML276
41▼	5308-1J20	256	8	SE	BTD	80n	850m	0.0	7.0	.80	2.0△	16m	.50	5	C	PROM	PN20m	ML274
42▼	5309-1J20	256	8	SE	BTD	80n	850m	0.0	7.0	.80	2.0§	16m	.50	5	C	PROM	PN20m	ML274
43#	RC82S114F	256	8	SE	BTD	90n	925m	0.0	5.0	.80	2.0§	9.6m	.50	5	C	PROM	B199	ML133
44#	RC82S114I	256	8	SE	BTD	90n	925m	0.0	5.0	.80	2.0§	9.6m	.50	5	C	PROM	B199	ML150b
45#	RC82S114N	256	8	SE	BTD	90n	925m	0.0	5.0	.80	2.0§	9.6m	.50	5	C	PROM	B199	ML135
46	S82S114F	256	8	SE	BTD	90n	925m	0.0	5.0	.80	2.0§	9.6m	.50	5	C	PROM	B199	ML133
47#	M54700S	256	8	SE	BTX	80nØ	350u%	0.0	5.0	.80	2.0	16m	.45	0	7	PROM	B50a	ML337
48	AM1702A-1	256	8	SE	MNX	550n	1.0 ☑	9.0	5.0	.65	2.0	1.6m	.45	0	7	EPROM	B441	ML207n
49	AM1702AL-1	256	8	SE	MNX	550n	1.0 ☑	9.0	5.0	.65	2.0	2.0m	.40	0	7	EPROM	B441	ML207n
50	AM9702A-1HDC	256	8	SE	MNX	550n	1.0 ☑	9.0	5.0	.65	2.0	1.6m	.45	0	7	EPROM	B441	ML207n
51	AM9702AL-1HDC	256	8	SE	MNX	550n	1.0 ☑	9.0	5.0	.65	2.0	2.0m	.40	0	7	EPROM	B441	ML207n
52	AM1702A-2	256	8	SE	MNX	650n	1.0 ☑	9.0	5.0	.65	2.0	1.6m	.45	0	7	EPROM	B441	ML207n
53	AM1702AL-2	256	8	SE	MNX	650n	1.0 ☑	9.0	5.0	.65	2.0	2.0m	.40	0	7	EPROM	B441	ML207n
54	AM9702A-2HDC	256	8	SE	MNX	650n	1.0 ☑	9.0	5.0	.65	2.0	1.6m	.45	0	7	EPROM	B441	ML207n
55	AM9702AL-2HDC	256	8	SE	MNX	650n	1.0 ☑	9.0	5.0	.65	2.0	2.0m	.40	0	7	EPROM	B441	ML207n
56	AM1702A	256	8	SE	MNX	1.0u	1.0 ☑	9.0	5.0	.65	2.0	1.6m	.45	0	7	EPROM	B441	ML207n
57	AM1702AL	256	8	SE	MNX	1.0u	1.0 ☑	9.0	5.0	.65	2.0	2.0m	.40	0	7	EPROM	B441	ML207n
58	AM9702AHDC	256	8	SE	MNX	1.0u	1.0 ☑	9.0	5.0	.65	2.0	1.6m	.45	0	7	EPROM	B441	ML207n
59	MM1702AQ	256	8	SE	MPG	1.0u	2.0 ☑	9.0	5.0	.65	3.0§	1.6m	.45	0	7	EPROM	B441	ML200
60	1702AI	256	8	SE	MXG	750n	2.0 ☑	9.0	5.0	.65	3.0§	1.6m	.45	0	7	EPROM	B18	ML256
61	MM4203Q	256	8§	SE	MXG	1.0u	1.0 ☑	12	5.0	1.0	3.0§	1.0u△	3.0	5	8	EPROM	B95	ML☑
62	MM5203Q	256	8§	SE	MXG	1.0u	1.0 ☑	12	5.0	1.0	3.0§	1.0u△	3.0	0	7	EPROM	B95	ML☑
63	HRM2048#4	256§	8§	SE	TAX	500n	640m♦	0.0	5.0	2.0	.80			0	7	PR Non-Vol RMM	B91	ML113
64	UC6548#4	256§	8	SS	MXX	1.0u	750m	15	5.0	.60	2.6			5	C		B9e	ML31a
65	UC7548#4	256§	8	SS	MXX	1.0u	750m	15	5.0	.60	2.6			0	7		B9e	ML31a
66#	FDR126Z	256	10	DC	MPX	1.0u	90m†	14	0.0	-9.0	-2.0			5	8		B35	ML41
67	3513-9-7C	256	10	SC	MPG	850n	1.0	12	5.0	.55	2.0	2.4m	.40	0	7		B3c	ML52
68	UC65723K	256	12	SC	HXX	1.1u	600m†	15	5.0	.60	3.0	3.0m§	2.4	5	C		B9j	ML32
69	UC75723K	256	12	SC	HXX	1.1u	600m†	15	5.0	.60	3.0	3.0m§	2.4	0	7		B9j	ML32
70#	SFF70701KM	256	12	SC	MPA	1.2u†	410mØ	12	5.0	.80	3.0	2.0m†	1.0	5	C		B65	ML29
71#	SFF70701KT	256	12	SC	MPA	1.2u†	410mØ	12	5.0	.80	3.0	2.0m†	1.0	2	8		B65	ML29
72	UC6572	256	12	SC	MXX	1.1u	600mØ†	15	5.0	.60	3.0	2.0u△	0.0♦	5	C		PN28e	ML32b
73	UC7572	256	12	SC	MXX	1.1u	600mØ†	15	5.0	.60	3.0	2.0u△	0.0♦	0	7		PN28e	ML32b
74	UA2572D	256	12	SC	MXX	1.2u	640m	20	0.0	.80♦	2.7	1.6m	.40	5	C		B9b	ML32
75	UA3572D	256	12	SC	MXX	1.2u	640m	20	0.0	.80♦	2.7	1.6m	.40	2	7		B9b	ML32
76	UC65253K#2	512§	2	SC	MPX	900n	150m♦	5.0	5.0	.80	2.6	1.6m	.40	5	C		B9m	ML31a
77	UC65254K#2	512§	2	SC	MPX	900n	150m♦	5.0	5.0	.80	2.6	1.6m	.40	5	C		B9m	FL3a
78	UC75253K#2	512§	2	SC	MPX	900n	150m♦	5.0	5.0	.80	2.6	1.6m	.40	0	7		B9m	ML31a
79	UC75254K#2	512§	2	SC	MPX	900n	150m♦	5.0	5.0	.80	2.6	1.6m	.40	0	7		B9m	ML31a
80	UA2525D#3	512	2	SC	MXX	900n	360m	10	0.0	.80♦	2.7	1.6m	.40	5	C		B9	ML31a
81	UA3525D#3	512	2	SC	MXX	900n	360m	10	0.0	.80♦	2.7	1.6m	.40	2	7		B9	ML31a
82	UA3525F#3	512	2	SC	MXX	900n	360m	10	0.0	.80♦	2.7	1.6m	.40	2	7		B9	FL3a
83	P3302	512	4		BTD	70n	650m	0.0	5.0			15m		0	7		PN16bx	ML4j
84	P3322	512	4		BTD	70n	650m	0.0	5.0		§	15m		0	7		PN16bx	ML4j
85	P3302-4	512	4		BTD	90n	650m	0.0	5.0			15m		0	7		PN16bx	ML4j
86	P3322-4	512	4		BTD	90n	650m	0.0	5.0		§	15m		0	7		PN16bx	ML4j
87#	RC82S231F	512	4		BTX	70n		0.0	5.0	.80	2.0§	16m	.50	5	C		B197	ML127m
88#	RC82S240F	512	4		BTX	90n	170u†%	0.0	5.0	.80	2.0△	9.6m	.50	5	C	ROM	B413	ML187
89	93431DC	512	4	SC	BTD	50n	650m	0.0	5.0	.80	2.0	16m	.45	0	7		B143	ML98a
90	93431FC	512	4	SC	BTD	50n	650m	0.0	5.0	.80	2.0△	16m	.45	0	7		B143	FL14
91	93431PC	512	4	SC	BTD	50n	650m	0.0	5.0	.80	2.0	16m	.45	0	7		B143	ML170
92	93441DC	512	4	SC	BTD	50n	650m	0.0	5.0	.80	2.0§	16m	.45	0	7		B143	ML98a
93	93441FC	512	4	SC	BTD	50n	650m	0.0	5.0	.80	2.0§	16m	.45	0	7		B143	FL14
94	93441PC	512	4	SC	BTD	50n	650m	0.0	5.0	.80	2.0§	16m	.45	0	7		B143	ML170
95	N82S230N	512	4	SC	BTD	50n	700m	0.0	5.0	.85	2.0△	16m	.45	0	7	ROM	B197	ML132
96	N82S231N	512	4	SC	BTD	50n	700m	0.0	5.0	.85	2.0§	16m	.45	0	7	ROM	B197	ML132
97	93431DM	512	4	SC	BTD	60n	650m	0.0	5.0	.80	2.0	16m	.45	5	C		B143	ML98a
98	93431FM	512	4	SC	BTD	60n	650m	0.0	5.0	.80	2.0	16m	.45	5	C		B143	FL14
99	93441DM	512	4	SC	BTD	60n	650m	0.0	5.0	.80	2.0§	16m	.45	5	C		B143	ML98a
100	93441FM	512	4	SC	BTD	60n	650m	0.0	5.0	.80	2.0§	16m	.45	5	C		B143	FL14
101	D3302A	512	4	SC	BTD	70n	700m♦	0.0	5.0	.85	2.0△	15m	.45	6	C		PN16bx	ML157c
102	D3322A	512	4	SC	BTD	70n	700m♦	0.0	5.0	.85	2.0§	15m	.45	6	C		PN16bx	ML157c
103	D3302A4	512	4	SC	BTD	90n	700m♦	0.0	5.0	.85	2.0△	15m	.45	6	C		PN16bx	ML157c
104	D3322A4	512	4	SC	BTD	90n	700m♦	0.0	5.0	.85	2.0§	15m	.45	6	C		PN16bx	ML157c

SYMBOLS AND CODES EXPLAINED IN INTERPRETER

3. READ ONLY MEMORIES (ROMS)

IN ORDER OF (1)No.WDS(2)No.BITS/WD(3)OP.MODE PRG.CODE(4)STRUCT.(5)MAX ACC.TIME(6)TYPE No.

LINE No.	6 TYPE No.	ORGANIZATION 1 No. WORDS	2 BITS PER WORD	3 OP MODE PROG CODE	4 STRUCTURE CODE	5 MAX ACCESS TIME (s)	MAX OPER. POWER DISS. (W)	RATED POWER SUP. SPAN NEG. (V)	POS. (V)	INPUT LOGIC LEVELS MAX '0' (V)	MIN '1' (V)	MIN OUTPUT SINK CURRENT (A)	@ OUT (V)	OPER. TEMP. RANGE CODE -	+	GENERAL DESCRIPTION	DRAWINGS LOGIC/ BLOCK	OUTLINE
1	N82S230F	512	4	SC	BTX	50n	675m	0.0	5.0	.85	2.0Δ	16m	.45	0	7		B197	ML127m
2	N82S231F	512	4	SC	BTX	50n	675m	0.0	5.0	.85	2.0§	16m	.45	0	7		B197	ML127m
3#	RC82S230F	512	4	SC	BTX	70n		0.0	5.0	.80	2.0Δ	16m	.50	5	C		B197	ML127m
4	S82S230F	512	4	SC	BTX	70n		0.0	5.0	.80	2.0Δ	16m	.50	5	C		B197	ML127m
5	S82S231F	512	4	SC	BTX	70n		0.0	5.0	.80	2.0§	16m	.50	5	C		B197	ML127m
6#	SFF70611KM#2	512	4	SC	MPA	700n	430m	12	5.0	.80	3.0	2.0mt	6.0	5	C		B119	ML95
7#	SFF70611KT#2	512	4	SC	MPA	700n	430m	12	5.0	.80	3.0	2.0mt	1.0	2	8		B119	ML95
8	UC7523#2	512$	4	SC	MPX	1.0u	420mØ	12	12	10*	4.0#			2	7		PN24w	ML31b
9	3580-9-6G	512	4	SC	MPX	1.7u	800mØ	27	0.0	-2.0	-9.0			0	7		B45a	ML51
10	UA2548#2	512	4	SC	MXX	900n	600m	20	0.0	.80♦	2.7	1.6m	.40	5	C		B9a	ML31a
11	UA3548#2	512	4	SC	MXX	900n	600m	20	0.0	.80♦	2.7	1.6m	.40	2	7		B9a	ML31a
12	3584-9-6G	512	4	SC	MXX	2.0uØ	500mØ	24	0.0	-9.0	-2.0			0	7		B47	ML51
13	MCM7620LDC	512	4	SE		70n	325m	0.0	5.0	.80	2.0Δ	16m	.45	0	7	CS PROM	PN16bx	ML157a
14	MCM7621LDC	512	4	SE		70n	325m	0.0	5.0	.80	2.0§	16m	.45	0	7	CS PROM	PN16bx	ML157a
15	MCM7620LDM	512	4	SE		85n	325m	0.0	5.0	.80	2.0Δ	16m	.45	5	C	CS PROM	PN16bx	ML157a
16	MCM7621LDM	512	4	SE		85n	325m	0.0	5.0	.80	2.0§	16m	.45	5	C	CS PROM	PN16bx	ML157a
17	93436DC	512	4	SE	BTD	50n	650m	0.0	5.0	.80	2.0Δ	16m	.45	0	7	Field Program	B143	ML1k
18	93436FC	512	4	SE	BTD	50n	650m♦	0.0	5.0	.80	2.0Δ	16m	.45	0	7	Field Program	B143	FL14
19	93436PC	512	4	SE	BTD	50n	650m♦	0.0	5.0	.80	2.0Δ	16m	.45	0	7	Field Program	B143	ML170
20	93446DC	512	4	SE	BTD	50n	650m♦	0.0	5.0	.80	2.0§	16m	.45	0	7	Field Program	B143	ML1k
21	93446FC	512	4	SE	BTD	50n	650m♦	0.0	5.0	.80	2.0§	16m	.45	0	7	Field Program	B143	FL14
22	93446PC	512	4	SE	BTD	50n	650m♦	0.0	5.0	.80	2.0§	16m	.45	0	7	Field Program	B143	ML170
23	AM27S12DC	512	4	SE	BTD	50nØ	650m	0.0	5.0	.80	2.0Δ	16m	.45	0	7	PROM	B445	ML312a
24	AM27S13DC	512	4	SE	BTD	50nØ	650m	0.0	5.0	.80	2.0§	16m	.45	0	7	PROM	B445	ML312a
25	N82S131N	512	4	SE	BTD	50n	700m	0.0	5.0	.85	2.0§	16m	.45	0	7	PROM	B197	ML132
26	29611DC	512	4	SE	BTD	55n	650m	0.0	5.0	.80	2.0§	16m	.50	0	7	PROM	B311	ML☑
27	DM74S570J	512	4	SE	BTD	55n	650m	0.0	5.0	.80	.45	16m	.50	0	7	PROM	B129	ML280
28	DM74S570N	512	4	SE	BTD	55n	650m	0.0	5.0	.80	.45	16m	.50	0	7	PROM	B129	ML280
29	DM74S571J	512	4	SE	BTD	55n	650m	0.0	5.0	.80	.45	16m	.50	0	7	PROM	B129	ML280
30	DM74S571N	512	4	SE	BTD	55n	650m	0.0	5.0	.80	.45	16m	.50	0	7	PROM	B129	ML280
31#	TM622	512	4	SE	BTD	55n	650m♦	0.0	5.0	.80	2.0Δ	16m	.45	0	7	Field Program	B143	ML170
32#	TM624	512	4	SE	BTD	55n	875m	0.0	5.0	.80	2.0§	16m	.45	0	7	Field Program	B161	ML216
33▼	6305-1J16	512	4	SE	BTD	60n	650m	0.0	7.0	.80	2.0Δ	16m	.50	0	7	PROM	PN16hn	ML280
34▼	6306-1J16	512	4	SE	BTD	60n	650m	0.0	7.0	.80	2.0§	16m	.50	0	7	PROM	PN16hn	ML280
35	29613DC	512	4	SE	BTD	60n	650m	0.0	5.0	.80	2.0§	16m	.50	0	7	PROM;Pwr Sw	B311a	ML☑
36	93436DM	512	4	SE	BTD	60n	650m	0.0	5.0	.80	2.0Δ	16m	.45	5	C	Field Program	B143	ML1k
37	93436FM	512	4	SE	BTD	60n	650m♦	0.0	5.0	.80	2.0Δ	16m	.45	5	C	Field Program	B143	FL14
38	93446DM	512	4	SE	BTD	60n	650m♦	0.0	5.0	.80	2.0§	16m	.45	5	C	Field Program	B143	ML1k
39	93446FM	512	4	SE	BTD	60n	650m♦	0.0	5.0	.80	2.0§	16m	.45	5	C	Field Program	B143	FL14
40	AM27S12DM	512	4	SE	BTD	60nØ	650m	0.0	5.0	.80	2.0Δ	16m	.45	5	C	PROM	B445	ML312a
41	AM27S12FM	512	4	SE	BTD	60nØ	650m	0.0	5.0	.80	2.0Δ	16m	.45	5	C	PROM	B445	FL33b
42	AM27S13DM	512	4	SE	BTD	60nØ	650m	0.0	5.0	.80	2.0§	16m	.45	5	C	PROM	B445	ML312a
43	AM27S13FM	512	4	SE	BTD	60nØ	650m	0.0	5.0	.80	2.0§	16m	.45	5	C	PROM	B445	FL33b
44	DM54S570J	512	4	SE	BTD	65n	650m	0.0	5.0	.80	2.0Δ	16m	.50	5	C	PROM	B129	ML127f
45	DM54S571J	512	4	SE	BTD	65n	650m	0.0	5.0	.80	2.0§	16m	.50	5	C	PROM	B129	ML280
46	29611DM	512	4	SE	BTD	70n	650m	0.0	5.0	.80	2.0§	16m	.50	5	C	PROM	B311	ML☑
47▼	29611FM	512	4	SE	BTD	70n	910m☑	0.5#	7.0#	0.8	2.0§	100uΔ	4.5	5	C	CS;PROM;Pwr Sw	B311	FL78
48	MCM7620DC	512	4	SE	BTD	70n	500m	0.0	5.0	.80	2.0Δ	16m	.45	0	7	PROM	PN16bt	ML372
49	MCM7621DC	512	4	SE	BTD	70n	500m	0.0	5.0	.80	2.0§	16m	.45	0	7	PROM	PN16bt	ML372
50▼	5305-1J16	512	4	SE	BTD	75n	650m	0.0	7.0	.80	2.0Δ	16m	.50	5	C	PROM	PN16hn	ML280
51▼	5306-1J16	512	4	SE	BTD	75n	650m	0.0	7.0	.80	2.0§	16m	.50	5	C	PROM	PN16hn	ML280
52	29613DM	512	4	SE	BTD	75n	650m	0.0	5.0	.80	2.0§	16m	.50	5	C	PROM;Pwr Sw	B311a	ML☑
53▼	29613FM	512	4	SE	BTD	75n	910m☑	0.5#	7.0#	0.8	2.0§	100uΔ	4.5	5	C	CS;PROM;Pwr Sw	B311a	FL78
54	JANM38510/20401BEA	512	4	SE	BTD	85n$	700m	0.0	5.0	.80	2.0Δ	12m	.50	5	C	PROM	B359	ML143
55	JANM38510/20401BEB	512	4	SE	BTD	85n$	700m	0.0	5.0	.80	2.0Δ	12m	.50	5	C	PROM	B359	ML143
56	JANM38510/20401BEC	512	4	SE	BTD	85n$	700m	0.0	5.0	.80	2.0Δ	12m	.50	5	C	PROM	B359	ML143
57	JANM38510/20401BFC	512	4	SE	BTD	85n$	700m	0.0	5.0	.80	2.0Δ	12m	.50	5	C	PROM	B359	FL31
58	JANM38510/20401CEA	512	4	SE	BTD	85n$	700m	0.0	5.0	.80	2.0Δ	12m	.50	5	C	PROM	B359	ML143
59	JANM38510/20401CEB	512	4	SE	BTD	85n$	700m	0.0	5.0	.80	2.0Δ	12m	.50	5	C	PROM	B359	ML143
60	JANM38510/20401CEC	512	4	SE	BTD	85n$	700m	0.0	5.0	.80	2.0Δ	12m	.50	5	C	PROM	B359	ML143
61	JANM38510/20401CFC	512	4	SE	BTD	85n$	700m	0.0	5.0	.80	2.0Δ	12m	.50	5	C	PROM	B359	FL31
62	JANM38510/20402BEA	512	4	SE	BTD	85n$	700m	0.0	5.0	.80	2.0§	12m	.50	5	C	PROM	B359	ML143
63	JANM38510/20402BEB	512	4	SE	BTD	85n$	700m	0.0	5.0	.80	2.0§	12m	.50	5	C	PROM	B359	ML143
64	JANM38510/20402BEC	512	4	SE	BTD	85n$	700m	0.0	5.0	.80	2.0§	12m	.50	5	C	PROM	B359	ML143
65	JANM38510/20402BFC	512	4	SE	BTD	85n$	700m	0.0	5.0	.80	2.0§	12m	.50	5	C	PROM	B359	FL31
66	JANM38510/20402CEA	512	4	SE	BTD	85n$	700m	0.0	5.0	.80	2.0§	12m	.50	5	C	PROM	B359	ML143
67	JANM38510/20402CEB	512	4	SE	BTD	85n$	700m	0.0	5.0	.80	2.0§	12m	.50	5	C	PROM	B359	ML143
68	JANM38510/20402CEC	512	4	SE	BTD	85n$	700m	0.0	5.0	.80	2.0§	12m	.50	5	C	PROM	B359	ML143
69	JANM38510/20402CFC	512	4	SE	BTD	85n$	700m	0.0	5.0	.80	2.0§	12m	.50	5	C	PROM	B359	FL31
70	MCM7620DM	512	4	SE	BTD	85n	500m	0.0	5.0	.80	2.0Δ	16m	.45	5	C	PROM	PN16bt	ML372
71	MCM7621DM	512	4	SE	BTD	85n	500m	0.0	5.0	.80	2.0§	16m	.45	5	C	PROM	PN16bt	ML372
72	N82S130F	512	4	SE	BTX	50n	700m	0.0	5.0	.85	2.0Δ	16m	.45	0	7	PROM	B197	ML127r
73	N82S130N	512	4	SE	BTX	50n	700m	0.0	5.0	.85	2.0Δ	16m	.45	0	7	PROM	B197	ML132
74	N82S131F	512	4	SE	BTX	50n	700m	0.0	5.0	.85	2.0§	16m	.45	0	7	PROM	B197	ML127r
75▼#	RC82S130F	512	4	SE	BTX	50n	700m	0.0	5.0	.85	2.0Δ	16m	.45	0	7	PROM	B197	ML127r
76▼#	RC82S131F	512	4	SE	BTX	50n	700m	0.0	5.0	.85	2.0§§	16m	.45	0	7	PROM	B197	ML127r
77♦	IM5604CDE	512	4	SE	BTX	70nØ	244u%	0.0	5.0	.80	2.0Δ	16m	.30	0	7		B469	ML429
78▼	IM5604CFE#	512	4	SE	BTX	70nØ	244u%	0.0	5.0	.80	2.0Δ	16m	.30	0	7	PROM	B469	FL76
79♦	IM5604CJE	512	4	SE	BTX	70nØ	244u%	0.0	5.0	.80	2.0Ø	16m	.30	0	7	PROM	B469	ML431
80▼	IM5604CPE#	512	4	SE	BTX	70nØ	244u%	0.0	5.0	.80	2.0Δ	16m	.30	0	7	PROM	B469	ML430
81♦	IM5604MDE	512	4	SE	BTX	70nØ	244u%	0.0	5.0	.80	2.0Δ	16m	.30	5	C		B469	ML429
82♦	IM5604MFE	512	4	SE	BTX	70nØ	244u%	0.0	5.0	.80	2.0Δ	16m	.30	5	C		B469	FL76
83♦	IM5604MJE	512	4	SE	BTX	70nØ	244u%	0.0	5.0	.80	2.0Ø	16m	.30	5	C	PROM	B469	ML431
84♦	IM5624CDE	512	4	SE	BTX	70nØ	244u%	0.0	5.0	.80	2.0Ø	16m	.30	0	7		B469	ML429
85▼	IM5624CFE#	512	4	SE	BTX	70nØ	244u%	0.0	5.0	.80	2.0Ø	16m	.30	0	7	PROM	B469	FL76
86♦	IM5624CJE	512	4	SE	BTX	70nØ	244u%	0.0	5.0	.80	2.0Δ	16m	.30	0	7	PROM	B469	ML431
87▼	IM5624CPE#	512	4	SE	BTX	70nØ	244u%	0.0	5.0	.80	2.0Ø	16m	.30	0	7	PROM	B469	ML430
88♦	IM5624MDE	512	4	SE	BTX	70nØ	244u%	0.0	5.0	.80	2.0Ø	16m	.30	5	C	PROM	B469	ML429
89♦	IM5624MFE	512	4	SE	BTX	70nØ	244u%	0.0	5.0	.80	2.0Ø	16m	.30	5	C		B469	FL76
90♦	IM5624MJE	512	4	SE	BTX	70nØ	244u%	0.0	5.0	.80	2.0Δ	16m	.30	5	C	PROM	B469	ML431
91	S82S130F	512	4	SE	BTX	70n	700m	0.0	5.0	.80	2.0Δ	16m	.50	5	C	PROM	B197	ML127r
92	S82S131F	512	4	SE	BTX	70n	700m	0.0	5.0	.80	2.0§	16m	.50	5	C	PROM	B197	ML127r

SYMBOLS AND CODES EXPLAINED IN INTERPRETER

3. READ ONLY MEMORIES (ROMS)

IN ORDER OF (1)No.WDS(2)No.BITS/WD(3)OP.MODE PRG.CODE(4)STRUCT.(5)MAX ACC.TIME(6)TYPE No.

LINE No.	6 TYPE No.	ORGANIZATION 1 No. WORDS	2 BITS PER WORD	3 OP MODE PROG CODE	4 STRUCTURE CODE	5 MAX ACCESS TIME (s)	MAX OPER. POWER DISS. (W)	RATED POWER SUP. SPAN NEG. (V)	POS. (V)	INPUT LOGIC LEVELS MAX '0' (V)	MIN '1' (V)	MIN OUTPUT SINK CURRENT (A)	@ OUT (V)	OPER. TEMP. RANGE CODE -	+	GENERAL DESCRIPTION	DRAWINGS LOGIC/ BLOCK	OUTLINE
1	HRM2048#3	512$	4$	SE	TAX	500n	640m♦	0.0	5.0	2.0	.80			0	7	PR Non-Vol RMM	B91	ML113
2	R06-2048S#2	512$	4	SS	MPN	1.5u	300m†	12	5.0	.80	-1.5§	1.6m	.40	5	C			
3	UC6548#3	512$	4	SS	MXX	1.0u	750m	15	5.0	.60	2.6			5	C		B9e	ML31a
4	UC7548#3	512$	4	SS	MXX	1.0u	750m	15	5.0	.60	2.6			0	7		B9e	ML31a
5#	FDR116Z	512	5	DC	MPX	850n	90m†	14	0.0	-9.0	-2.0			5	8		C7	ML41
6	2514NXCMXXXX																	
		512	5	SC	MPG	600nØ	730mØ	12	5.0	1.0	3.2§	1.6m		0	7		C15a	ML50
7	D3304A	512	8		BTD	70n	950m	0.0	5.0			15m		0	7		B165	ML118d
8	D3304A4	512	8		BTD	90n	950m	0.0	5.0			15m		0	7		B165	ML118d
9	D3304A6	512	8		BTD	90n	700m	0.0	5.0			15m		0	7		B165	ML118d
10#	RC82S240N	512	8		BTX	90n	925m	0.0	5.0	.80	2.0Δ	9.6m	.50	5	C	ROM	B413	ML135
11#	RC82S241F	512	8		BTX	90n	170ut%	0.0	5.0	.80	2.0§	9.6m	.50	5	C	ROM	B413	ML187
12#	RC82S241N	512	8		BTX	90n	925m	0.0	5.0	.80	2.0§	9.6m	.50	5	C	ROM	B413	ML135
13#	MSM575A	512	8	DC	MCX	4.5u	10m	0.0	5.0	.80	3.6	1.6m	.40	2	7		B205	ML258
14#	FDR131Z#1	512$	8	DC	MPX	1.5u	90m†	14	0.0	-9.0	-2.0			0	7		B36	ML41
15	TBP28R45J	512	8	S	BTD	20n†	550m	0.0	5.0	.80		16m#		0	7	PROM	PN24iv	MLØ
16	TBP28R45N	512	8	S	BTD	20n†	550m	0.0	5.0	.80		16m#		0	7	PROM	PN24iv	MLØ
17	TBP28P42J	512	8	S	BTD	35n†	500m†	0.0	5.0	.80	2.0§	16m#		0	7	PROM Pwr Sw	PN20f	MLØ
18	TBP28P42N	512	8	S	BTD	35n†	500m†	0.0	5.0	.80	2.0§	16m#		0	7	PROM Pwr Sw	PN20f	MLØ
19	TBP28P45J	512	8	S	BTD	35n†	500m†	0.0	5.0	.80	2.0§	16m#		0	7	PROM Pwr Sw	PN24iu	MLØ
20	TBP28P45N	512	8	S	BTD	35n†	500m†	0.0	5.0	.80	2.0§	16m#		0	7	PROM Pwr Sw	PN24iu	MLØ
21	TBP28S42J	512	8	S	BTD	35n†	500m†	0.0	5.0	.80	2.0§	16m#		0	7	PROM	PN20af	MLØ
22	TBP28S42N	512	8	S	BTD	35n†	500m†	0.0	5.0	.80	2.0§	16m#		0	7	PROM	PN20af	MLØ
23	TBP28S45J	512	8	S	BTD	35n†	500m†	0.0	5.0	.80	2.0§	16m#		0	7	PROM	PN24it	MLØ
24	TBP28S45N	512	8	S	BTD	35n†	500m†	0.0	5.0	.80	2.0§	16m#		0	7	PROM	PN24it	MLØ
25	TBP28L42J	512	8	S	BTD	60n†	250m†	0.0	5.0	8.0	2.0§	8.0m#		0	7	PROM	PN20af	MLØ
26	TBP28L42N	512	8	S	BTD	60n†	250m†	0.0	5.0	8.0	2.0§	8.0m#		0	7	PROM	PN20af	MLØ
27	TBP28L45J	512	8	S	BTD	60n†	250m†	0.0	5.0	8.0	2.0§	8.0m#		0	7	PROM	PN24it	MLØ
28	TBP28L45N	512	8	S	BTD	60n†	250m†	0.0	5.0	8.0	2.0§	8.0m#		0	7	PROM	PN24it	MLØ
29	TBP18S46J	512	8	S	BTD	75n	600m†	0.0	5.0	.80	2.0§	12m#		0	7	PROM	PN24is	MLØ
30	TBP18S46N	512	8	S	BTD	75n	600m†	0.0	5.0	.80	2.0§	12m#		0	7	PROM	PN24is	MLØ
31	TBP18SA42J	512	8	S	BTD	75n	600m†	0.0	5.0	.80	2.0Δ	16m#		0	7	PROM	PN20af	MLØ
32	TBP18SA42N	512	8	S	BTD	75n	600m†	0.0	5.0	.80	2.0Δ	16m#		0	7	PROM	PN20af	MLØ
33▼	TBP18SA46J	512	8	S	BTD	75n	600m†	0.0	5.0	.80	2.0Δ	16m#		0	7	PROM	PN24is	MLØ
34▼	TBP18SA46N	512	8	S	BTD	75n	600m†	0.0	5.0	.80	2.0Δ	16m#		0	7	PROM		MLØ
35▼	TBP18S42MJ	512	8	S	BTD	85n	600m†	0.0	5.0	.80	2.0§	12m#		5	C	PROM	PN20af	MLØ
36	TBP18S46MJ	512	8	S	BTD	85n	600m†	0.0	5.0	.80	2.0§	12m#		5	C	PROM	PN24is	MLØ
37	TBP18S42J	512	8	S	BTD	75m	600m†	0.0	5.0	.80	2.0§	12m#		0	7	PROM	PN20af	MLØ
38	TBP18S42N	512	8	S	BTD	75m	600m†	0.0	5.0	.80	2.0§	12m#		0	7	PROM	PN20af	MLØ
39	AM9214DC	512	8	S	MNG	500n	1.0 Ø	0.0	5.0	.80	2.0§	2.4m	.40	0	7		B443	ML207p
40	AM9214DM	512	8	S	MNG	500n	1.0 Ø	0.0	5.0	.80	2.0§	2.4m	.40	5	C		B443	ML207p
41	AM35141DC	512	8	S	MNG	700n	1.0 Ø	0.0	5.0	.55	2.3§	2.4m	.40	0	7		B443	ML207p
42	AM35142DC	512	8	S	MNG	1.0u	1.0 Ø	0.0	5.0	.55	2.3§	2.4m	.40	0	7		B443	ML207p
43	93432DC	512	8	SC	BTD	55n	875m	0.0	5.0	.80	2.0	16m	.45	0	7		B161	ML193
44	93432FC	512	8	SC	BTD	55n	875m	0.0	5.0	.80	2.0Δ	16m	.45	0	7		B161	FL3c
45	93432PC	512	8	SC	BTD	55n	875m	0.0	5.0	.80	2.0	16m	.45	0	7		B161	ML216
46	93442DC	512	8	SC	BTD	55n	875m	0.0	5.0	.80	2.0§	16m	.45	0	7		B161	ML193
47	93442FC	512	8	SC	BTD	55n	875m	0.0	5.0	.80	2.0§	16m	.45	0	7		B161	FL3c
48	93442PC	512	8	SC	BTD	55n	875m	0.0	5.0	.80	2.0§	16m	.45	0	7		B161	ML216
49	N82S215F	512	8	SC	BTD	60n	650m†	0.0	5.0	.85	2.0§	9.6m	.50	0	7	ROM	B199c	ML133
50	N82S215I	512	8	SC	BTD	60n	875m	0.0	5.0	.85	2.0§	9.6m	.50	0	7		B199c	ML150b
51	N82S215N	512	8	SC	BTD	60n	650m†	0.0	5.0	.85	2.0§	9.6m	.50	0	7	ROM	B199c	ML135
52	93432DM	512	8	SC	BTD	70n	875m	0.0	5.0	.80	2.0	16m	.45	5	C		B161	ML193
53	93432FM	512	8	SC	BTD	70n	875m	0.0	5.0	.80	2.0	16m	.45	5	C		B161	FL3c
54	93442DM	512	8	SC	BTD	70n	875m	0.0	5.0	.80	2.0§	16m	.45	5	C		B161	ML193
55	93442FM	512	8	SC	BTD	70n	875m	0.0	5.0	.80	2.0§	16m	.45	5	C		B161	FL3c
56	C3324A	512	8	SC	BTD	70n	950m	0.0	5.0	.85	2.0§	15m	.45	0	7		B165	ML34c
57	D3324A	512	8	SC	BTD	70n	950m	0.0	5.0	.85	2.0§	15m	.45	0	7		B165	ML118d
58	C3324A4	512	8	SC	BTD	90n	950m	0.0	5.0	.85	2.0§	15m	.45	0	7		B165	ML34c
59	D3324A4	512	8	SC	BTD	90n	950m	0.0	5.0	.85	2.0§	15m	.45	0	7		B165	ML118d
60#	RC82S215I	512	8	SC	BTD	90n	925m	0.0	5.0	.80	2.0§	9.6m	.50	5	C		B199c	ML150b
61	S82S215F	512	8	SC	BTD	90n	650m†	0.0	5.0	.80	2.0§	9.6m	.50	5	C	ROM	B199c	ML133
62	S82S215I	512	8	SC	BTD	90n	925m	0.0	5.0	.80	2.0§	9.6m	.50	5	C		B199c	ML150b
63	N82S240F	512	8	SC	BTX	60n	170ut%	0.0	5.0	.85	2.0Δ	9.6m	.45	0	7	ROM	B413	ML187
64	N82S240N	512	8	SC	BTX	60n	870m	0.0	5.0	.85	2.0Δ	9.6m	.45	0	7	ROM	B413	ML135
65	N82S241F	512	8	SC	BTX	60n	170ut%	0.0	5.0	.85	2.0§	9.6m	.45	0	7	ROM	B413	ML187
66	N82S241N	512	8	SC	BTX	60n	875m	0.0	5.0	.85	2.0§	9.6m	.45	0	7	ROM	B413	ML135
67	N8205Y	512	8	SC	BTX	75n	850m	0.0	5.0	.85*	2.01§	9.6m	.50	0	7		B32	ML47e
68	S82S240F	512	8	SC	BTX	90n	170ut%	0.0	5.0	.80	2.0Δ	9.6m	.50	5	C	ROM	B413	ML187
69	S82S241F	512	8	SC	BTX	90n	170ut%	0.0	5.0	.80	2.0§	9.6m	.50	5	C	ROM	B413	ML187
70	HCMP1831D	512	8	SC	MCG	400n†	30m†	0.0	10					5	C		B354	
71	HCMP1832D	512	8	SC	MCG	400n†	15m†	0.0	10					5	C		B355	
72	HCMP1831CD	512	8	SC	MCG	850n†	30m†	0.0	5.0					5	C		B354	
73	HCMP1832CD	512	8	SC	MCG	850n†	15m†	0.0	5.0					5	C		B355	
74	CDP1831CD	512	8	SC	MCX	300n	5.5k♦	0.5	7.0#	1.5	3.5	.80	.40	4	8	PR	A498	MO015AC
75	CDP1831CE	512	8	SC	MCX	300n	5.5k♦	0.5	7.0#	1.5	3.5	.80	.40	4	8	PR	A498	MO015AA
76	CDP1831D	512	8	SC	MCX	300n	1.1k♦	0.5	11#	1.5	3.5	.80	.40	4	8	PR	A498	MO015AC
77	CDP1831E	512	8	SC	MCX	300n	1.1k♦	0.5	11#	1.5	3.5	.80	.40	4	8	PR	A498	MO015AA
78▼	HCMP1831D#	512	8	SC	MCX	350n†	10m†	0.0	12	3.0	7.0	.80	.40	5	C	ROM	B354a	
79▼	HCMP1831P	512	8	SC	MCX	350n†	10m†	0.0	12	3.0	7.0	.80	.40	4	8	ROM	B354a	
80	CDP1832CD	512	8	SC	MCX	400n	5.5k♦	0.5	7.0#	1.5	3.5	.80	.40	4	8	PR	A498	MO015AC
81	CDP1832CE	512	8	SC	MCX	400n	5.5k♦	0.5	7.0#	1.5	3.5	.80	.40	4	8	PR	A498	MO015AA
82	CDP1832D	512	8	SC	MCX	400n	1.1k♦	0.5	11#	1.5	3.5	.80	.40	4	8	PR	A498	MO015AC
83	CDP1832E	512	8	SC	MCX	400n	1.1k♦	0.5	11#	1.5	3.5	.80	.40	4	8	PR	A498	MO015AA
84▼	HCMP1832D#	512	8	SC	MCX	400n†	10m†	0.0	12	3.0	7.0	.80	.40	5	C	ROM	B472	
85▼	HCMP1832P	512	8	SC	MCX	400n†	10m†	0.0	12	3.0	7.0	.80	.40	4	8	ROM	B472	
86▼	HCMP1831CP	512	8	SC	MCX	850n†	5.0m†	0.0	6.5	1.5	3.5	.80	.40	4	8	ROM	B354a	
87▼	HCMP1832CP	512	8	SC	MCX	850n†	5.0m†	0.0	6.5	1.5	3.5	.80	.40	4	8	ROM	B472	
88#	MSM575	512	8	SC	MCX	1.5utØ	2.5m♦Ø	0.0	5.0	.80	3.6	1.6m†	.40	2	7		B205	ML118h
89#	SFF70612KM#1																	
		512	8	SC	MPA	7.0ut	460mØ	12	5.0	.80	3.0	2.0mt	1.0	5	C		B96	ML95
90#	SFF70612KT#1																	
		512	8	SC	MPA	7.0ut	460mØ	12	5.0	.80	3.0	2.0mt	1.0	2	8		B96	ML95
91	3514-91-7R	512	8	SC	MPG	700n	500m	12	5.0	.55	1.25	2.4m	.40	0	7		B90	ML103
92	3514-92-7R	512	8	SC	MPG	1.0u	500m	12	5.0	.55	1.25	2.4m	.40	0	7		B90	ML103
93	MM4214J	512	8	SC	MPX	1.0uØ	629mØ	12	5.0	1.0	3.0§	1.6m	.40	5	C	ROM	B178	ML133a
94	MM5214J	512	8	SC	MPX	1.0uØ	629mØ	12	5.0	1.0	3.0§	1.6m	.40	2	7	ROM	B178	ML133a
95	MM5214N	512	8	SC	MPX	1.0uØ	629mØ	12	5.0	1.0	3.0§	1.6m	.40	2	7	ROM	B178	ML183
96▼	AM27S25DC	512	8	SE	BTD			0.0	5.0	.80	2.0§	16m	.50	0	7	PROM	B488a	ML283
97▼	AM27S25DM	512	8	SE	BTD			0.0	5.0	.80	2.0§	16m	.50	5	C	PROM	B488a	ML283
98	53S483N	512	8	SE	BTD	30n†		0.0	5.0	.80	2.0§	16m	.50	5	C	PROM	PN24ea	ML277
99	MCM7640L	512	8	SE	BTD	40n†		0.0	5.0							Open Coll	PN24an	ML319
100	MCM7640P	512	8	SE	BTD	40n†		0.0	5.0							Open Coll	PN24an	ML39
101	MCM7641L	512	8	SE	BTD	40n†		0.0	5.0							Tri State	PN24an	ML319
102	MCM7641P	512	8	SE	BTD	40n†		0.0	5.0							Tri State	B3256	ML39
103	N82S146F	512	8	SE	BTD	45n	775m	0.0	5.0	.85	2.0Δ	9.6m	.45	0	7	PROM	B353	ML285
104	N82S147F	512	8	SE	BTD	45n	775m	0.0	5.0	.85	2.0§	9.6m	.45	0	7	PROM	B353	ML285
105	AM27S26DC	512	8	SE	BTD	50n*Ø	925m	0.0	5.0	.80	2.0Δ	16m	.38	0	7	PROM	B448	ML162e
106	AM27S26DM	512	8	SE	BTD	50n*Ø	925m	0.0	5.0	.80	2.0Δ	16m	.38	5	C	PROM	B448	ML162e
107	AM27S27DC	512	8	SE	BTD	50n*Ø	925m	0.0	5.0	.80	2.0§	16m	.38	0	7	PROM	B448	ML162e

SYMBOLS AND CODES EXPLAINED IN INTERPRETER

3. READ ONLY MEMORIES (ROMS)

IN ORDER OF (1)No.WDS(2)No.BITS/WD(3)OP.MODE PRG.CODE(4)STRUCT.(5)MAX ACC.TIME(6)TYPE No.

LINE No.	6 TYPE No.	ORGANIZATION 1 No. WORDS	2 BITS PER WORD	3 OP MODE PROG CODE	4 STRUCTURE CODE	5 MAX ACCESS TIME (s)	MAX OPER. POWER DISS. (W)	RATED POWER SUP. SPAN NEG. (V)	POS. (V)	INPUT LOGIC LEVELS MAX '0' (V)	MIN '1' (V)	MIN OUTPUT SINK CURRENT (A)	@ OUT (V)	OPER. TEMP. RANGE CODE -	+	GENERAL DESCRIPTION	DRAWINGS LOGIC/ BLOCK	OUTLINE
1	AM27S27DM	512	8	SE	BTD	50n*Ø	925m	0.0	5.0	.80	2.0§	16m	.38	5	C	PROM	B448	ML162e
2	HM3-7640AR5	512	8	SE	BTD	50n	900m	0.0	5.0	.80	2.0△	16m	.45	0	7	PROM,Latched	B388b	ML311
3	HM3-7641AR5	512	8	SE	BTD	50n	900m	0.0	5.0	.80	2.0§	16m	.45	0	7	PROM,Latched	B388b	ML311
4	HM9-7641AR5	512	8	SE	BTD	50n	900m	0.0	5.0	.80	2.0§	16m	.45	0	7	PROM,Latched	B388b	FL55
5	93438DC	512	8	SE	BTD	55n	875m·	0.0	5.0	.80	2.0	16m	.45	0	7	Field Program	B161	ML193
6	93438FC	512	8	SE	BTD	55n	875m	0.0	5.0	.80	2.0△	16m	.45	0	7	Field Program	B161	FL3c
7	93438PC	512	8	SE	BTD	55n	875m	0.0	5.0	.80	2.0△	16m	.45	0	7	Field Program	B161	ML216
8	93448DC	512	8	SE	BTD	55n	875m	0.0	5.0	.80	2.0§	16m	.45	0	7	Field Program	B161	ML193
9	93448FC	512	8	SE	BTD	55n	875m	0.0	5.0	.80	2.0§	16m	.45	0	7	Field Program	B161	FL3c
10	93448PC	512	8	SE	BTD	55n	875m	0.0	5.0	.80	2.0§	16m	.45	0	7	Field Program	B161	ML216
11▼	AM27S28DC	512	8	SE	BTD	55n		0.0	5.0	.80	2.0△	16m	.50	0	7	PROM	B476	ML285
12▼	AM27S29DC	512	8	SE	BTD	55n		0.0	5.0	.80	2.0§	16m	.50	0	7	PROM	B476	ML285
13▼	AM27S30DC	512	8	SE	BTD	55n		0.0	5.0	.80	2.0△	16m	.50	0	7	PROM	B476a	ML88d
14▼	AM27S31DC	512	8	SE	BTD	55n		0.0	5.0	.80	2.0§	16m	.50	0	7	PROM	B476a	ML88d
15	AM27S15DC	512	8	SE	BTD	60nØ	775m	0.0	5.0	.80	2.0§	16m	.50	0	7	PROM	B447	ML239
16	DM74S472J	512	8	SE	BTD	60n	775m	0.0	5.0	.80	2.0§	16m	.45	0	7	PROM	B366	ML384
17	DM74S472N	512	8	SE	BTD	60n	775m	0.0	5.0	.80	2.0§	16m	.45	0	7	PROM	B366	ML253
18	DM74S473J	512	8	SE	BTD	60n	775m	0.0	5.0	.80	2.0△	16m	.45	0	7	PROM	B366	ML384
19	DM74S473N	512	8	SE	BTD	60n	775m	0.0	5.0	.80	2.0△	16m	.45	0	7	PROM	B366	ML253
20	N82S115F	512	8	SE	BTD	60n	165ut%	0.0	5.0	.85	2.0§	9.6m	.45	0	7	PROM	B199a	ML133
21	N82S115I	512	8	SE	BTD	60n	875m	0.0	5.0	.85	2.0§	9.6m	.50	0	7	PROM	B199a	ML150b
22	N82S115N	512	8	SE	BTD	60n	875m	0.0	5.0	.85	2.0§	9.6m	.45	0	7	PROM	B199a	ML135
23	29621DC	512	8	SE	BTD	65n	775m	0.0	5.0	.80	2.0§	16m	.50	0	7	PROM	B312	ML☑
24	DM74S474J	512	8	SE	BTD	65n	850m	0.0	5.0	.80	2.0§	16m	.45	0	7	PROM	B161	ML200
25	DM74S474N	512	8	SE	BTD	65n	850m	0.0	5.0	.80	2.0§	16m	.45	0	7	PROM	B161	ML72f
26	DM74S475J	512	8	SE	BTD	65n	850m	0.0	5.0	.80	2.0	16m	.45	0	7	PROM	B161	ML200
27	DM74S475N	512	8	SE	BTD	65n	850m	0.0	5.0	.80	2.0	16m	.45	0	7	PROM	B161	M72f
28▼	6340-1J24	512	8	SE	BTD	70n	850m	0.0	7.0	.80	2.0△	16m	.50	0	7	PROM	PN24eb	ML276
29▼	6341-1J24	512	8	SE	BTD	70n	850m	0.0	7.0	.80	2.0§§	16m	.50	0	7	PROM	PN24eb	ML276
30▼	6348-1J20	512	8	SE	BTD	70n	850m	0.0	7.0	.80	2.0△	16m	.50	0	7	PROM	PN20ag	ML274
31▼	6349-1J20	512	8	SE	BTD	70n	850m	0.0	7.0	.80	2.0§	16m	.50	0	7	PROM	PN20ag	ML274
32	29623DC	512	8	SE	BTD	70n	775m	0.0	5.0	.80	2.0§	16m	.50	0	7	PROM;Pwr Sw	B312a	ML☑
33	93438DM	512	8	SE	BTD	70n	875m	0.0	5.0	.80	2.0	16m	.45	5	C	Field Program	B161	ML193
34	93438FM	512	8	SE	BTD	70n	875m	0.0	5.0	.80	2.0△	16m	.45	5	C	Field Program	B161	FL3c
35	93448DM	512	8	SE	BTD	70n	875m	0.0	5.0	.80	2.0§	16m	.45	5	C	Field Program	B161	ML193
36	93448FM	512	8	SE	BTD	70n	875m	0.0	5.0	.80	2.0§	16m	.45	5	C	Field Program	B161	FL3c
37▼	AM27S28DM	512	8	SE	BTD	70n		0.0	5.0	.80	2.0△	16m	.50	5	C	PROM	B476	ML285
38▼	AM27S29DM	512	8	SE	BTD	70n		0.0	5.0	.80	2.0§	16m	.50	5	C	PROM	B476	ML285
39▼	AM27S30DM	512	8	SE	BTD	70n		0.0	5.0	.80	2.0△	16m	.50	5	C	PROM	B476a	ML88d
40▼	AM27S31DM	512	8	SE	BTD	70n		0.0	5.0	.80	2.0§	16m	.50	5	C	PROM	B476a	ML88d
41	HM1-7640AR2	512	8	SE	BTD	70n	900m	0.0	5.0	.80	2.0△	16m	.45	5	C	PROM,Latched	B388b	ML310
42	HM9-7641AR2	512	8	SE	BTD	70n	900m	0.0	5.0	.80	2.0§	16m	.45	5	C	PROM,Latched	B388b	FL55
43	MCM7640D	512	8	SE	BTD	70n	700m	0.0	5.0	.80	2.0△	16m	.45	0	7	PROM	PN24an	ML319
44	MCM7640DC	512	8	SE	BTD	70n	700m	0.0	5.0	.80	2.0△	16m	.45	0	7	PROM	PN24an	ML319
45	MCM7641D	512	8	SE	BTD	70n	700m	0.0	5.0	.80	2.0§	16m	.45	0	7	PROM	PN24an	ML319
46	MCM7641DC	512	8	SE	BTD	70n	700m	0.0	5.0	.80	2.0§	16m	.45	0	7	PROM	PN24an	ML319
47	DM54S472J	512	8	SE	BTD	75n	775m	0.0	5.0	.80	2.0§	16m	.50	5	C	PROM	B366	ML384
48	DM54S473J	512	8	SE	BTD	75n	775m	0.0	5.0	.80	2.0△	16m	.50	5	C	PROM	B366	ML384
49	DM54S474J	512	8	SE	BTD	75n	850m	0.0	5.0	.80	2.0§	16m	.50	5	C	PROM	B161	ML133a
50	DM54S475J	512	8	SE	BTD	75n	850m	0.0	5.0	.80	2.0△	16m	.50	5	C	PROM	B161	ML133a
51	SN74S474N	512	8	SE	BTD	75n	600mt	0.0	5.0	.80	2.0§	12m	.50	0	7	Field Program	PN24aj	ML72c
52▼	5340-1J24	512	8	SE	BTD	80n	850m	0.0	7.0	.80	2.0△	16m	.50	5	C	PROM	PN24eb	ML276
53▼	5341-1J24	512	8	SE	BTD	80n	850m	0.0	7.0	.80	2.0§	16m	.50	5	C	PROM	PN24eb	ML276
54▼	5348-1J20	512	8	SE	BTD	80n	775m	0.0	7.0	.80	2.0△	16m	.50	5	C	PROM	PN20ag	ML274
55▼	5349-1J20	512	8	SE	BTD	80n	775m	0.0	7.0	.80	2.0§	16m	.50	5	C	PROM	PN20ag	ML274
56	29621DM	512	8	SE	BTD	80n	775m	0.0	5.0	.80	2.0§	16m	.50	5	C	PROM	B312	ML☑
57▼	29621FM	512	8	SE	BTD	80n	1.0 ☑	0.5#	7.0#	0.8	2.0§	100u△	4.5	5	C	CS;PROM;Pwr Sw	PN20h	FL80
58	29623DM	512	8	SE	BTD	85n	775m	0.0	5.0	.80	2.0§	16m	.50	5	C	PROM;Pwr Sw	B312a	ML☑
59▼	29623FM	512	8	SE	BTD	85n	1.0 ☑	0.5#	7.0#	0.8	2.0§	100u△	4.5	5	C	CS;PROM;Pwr Sw	PN20j	FL80
60	MCM7640DM	512	8	SE	BTD	85n	700m	0.0	5.0	.80	2.0△	16m	.45	5	C	PROM	PN24an	ML319
61	MCM7641DM	512	8	SE	BTD	85n	700m	0.0	5.0	.80	2.0§	16m	.45	5	C	PROM	PN24an	ML319
62	SN54S474J	512	8	SE	BTD	85n	600mt	0.0	5.0	.80	2.0§	12m	.50	5	C	Field Program	PN24aj	MO015AA
63	SN54S475J	512	8	SE	BTD	85n	600mt	0.0	5.0	.80	2.0△	12m	.50	5	C	Field Program	PN24aj	MO015AA
64	AM27S15DM	512	8	SE	BTD	90nØ	925m	0.0	5.0	.80	2.0§	16m	.50	5	C	PROM	B447	ML239
65#	RC82S115F	512	8	SE	BTD	90n	925m	0.0	5.0	.80	2.0§	9.6m	.50	5	C	PROM	B199a	ML133
66#	RC82S115I	512	8	SE	BTD	90n	925m	0.0	5.0	.80	2.0§	9.6m	.50	5	C	PROM	B199a	ML150b
67#	RC82S115N	512	8	SE	BTD	90n	925m	0.0	5.0	.80	2.0§	9.6m	.50	5	C	PROM	B199a	ML135
68	S82S115F	512	8	SE	BTD	90n	925m	0.0	5.0	.80	2.0§	9.6m	.50	5	C	PROM	B199a	ML133
69	S82S115N	512	8	SE	BTD	90n	925m	0.0	5.0	.80	2.0§	9.6m	.50	5	C	PROM	B199a	ML135
70	N82S140F	512	8	SE	BTX	60n	170ut%	0.0	5.0	.85	2.0△	9.6m	.45	0	7	PROM	B413	ML133
71	N82S140N	512	8	SE	BTX	60n	875m	0.0	5.0	.85	2.0△	9.6m	.45	0	7	PROM	B413	ML135
72	N82S141F	512	8	SE	BTX	60n	170ut%	0.0	5.0	.85	2.0§	9.6m	.45	0	7	PROM	B413	ML133
73	N82S141N	512	8	SE	BTX	60n	875m	0.0	5.0	.85	2.0§	9.6m	.45	0	7	PROM	B413	ML135
74#	uPB405C	512	8	SE	BTX	70nØ	800m	.50	7.0	.80	2.0	16m	.45	2	7		B413	ML72g
75#	uPB405D	512	8	SE	BTX	70nØ	800m	.50	7.0	.80	2.0	16m	.45	2	7		B413	ML30I
76#	uPB425C	512	8	SE	BTX	70nØ	800m	.50	7.0	.80	2.0	16m	.45	2	7		B413	ML72g
77#	uPB425D	512	8	SE	BTX	70nØ	800m	.50	7.0	.80	2.0	16m	.45	2	7		B413	ML30I
78#	RC82S140F	512	8	SE	BTX	90n	925m	0.0	5.0	.80	2.0△	9.6m	.50	5	C	PROM	B413	ML133
79#	RC82S140N	512	8	SE	BTX	90n	925m	0.0	5.0	.80	2.0△	9.6m	.50	5	C	PROM	B413	ML135
80#	RC82S141F	512	8	SE	BTX	90n	925m	0.0	5.0	.80	2.0§	9.6m	.50	5	C	PROM	B413	ML133
81#	RC82S141N	512	8	SE	BTX	90n	925m	0.0	5.0	.80	2.0§	9.6m	.50	5	C	PROM	B413	ML135
82	S82S140F	512	8	SE	BTX	90n	925m	0.0	5.0	.80	2.0△	9.6m	.50	5	C	PROM	B413	ML133
83	S82S140N	512	8	SE	BTX	90n	925m	0.0	5.0	.80	2.0△	9.6m	.50	5	C	PROM	B413	ML135
84	S82S141F	512	8	SE	BTX	90n	925m	0.0	5.0	.80	2.0§	9.6m	.50	5	C	PROM	B413	ML133
85	HM6641-2	512	8	SE	MCG	150n	50m	0.0	5.0	.80	3.0§			5	C	PROM		
86	HM6641-5	512	8	SE	MCG	150n	50m	0.0	5.0	.80	3.0§			0	7	PROM		
87	HM6641-9	512	8	SE	MCG	150n	50m	0.0	5.0	.80	3.0§			4	8	PROM		
88	IM6654AIDG	512	8	SE	MCX	300n	5.0ut♦	0.0	10	.80	8.0§	1.0u△		4	8	EPROM	B464	ML404
89	IM6654AIJG	512	8	SE	MCX	300n	5.0ut♦	0.0	10	.80	8.0§	1.0u△		4	8	EPROM	B464	ML403
90▼	HNVM3004	512	8	SE	MCX	500nt	5.0mt	0.0	6.5	1.5	3.5	1.6	.40	5	C	EAROM	B475a	
91	IM6654IDG	512	8	SE	MCX	550n	5.0ut♦	0.0	5.0	.80	3.0§	1.0u△		4	8	EPROM	B464	ML404
92	IM6654IJG	512	8	SE	MCX	550n	5.0ut♦	0.0	5.0	.80	3.0§	1.0u△		4	8	EPROM	B464	ML403
93▼	IM6654AMJG	512	8	SE	MCX	600n	240m	0.0	6.0	.80	4.0§	1.0u△		5	C	EPROM	B464	ML403
94	IM6654MDG	512	8	SE	MCX	600n	5.0ut♦	0.0	5.0	.80	3.0§	1.0u△		5	C	EPROM	B464	ML404
95	IM6654MJG	512	8	SE	MCX	600n	5.0ut♦	0.0	5.0	.80	3.0§	1.0u△		5	C	EPROM	B464	ML403
96	EA2704DC	512	8	SE	MNG	450n	630m	5.0	12	.80	2.0§	1.6m	.45	0	7	EPROM	B256	ML207f
97#	M2704D1	512	8	SE	MNG	450n	800m	5.0	12	.65	3.0§	1.6m	.45	0	7	EPROM	B296b	ML303
98	EA2704DL	512	8	SE	MNG	500n	630m	5.0	12	.80	2.0§	1.6m	.45	5	9	EPROM	B256	ML207f
99	EA2704DM	512	8	SE	MNG	550n	630m	5.0	12	.80	2.0§	1.6m	.45	5	C	EPROM	B256	ML207f
100	MM5204Q-1	512	8	SE	MNG	700n	750m☑	12	5.0	.80	3.5§	1.0u△	5.3	0	7	EPROM	B172	ML☑
101	MM5204Q	512	8	SE	MPG	1.0u	480m	12	5.0	.80	3.5§	1.6m	.40	0	7	Non-Vol EPROM	B172	ML200
102	MM4204Q	512	8	SE	MPG	1.2u	600m	12	5.0	.80	3.5§	1.6m	.40	5	8	Non-Vol EPROM	B172	ML184a
103	KM8655	512	8	SS	MPA	800n	440m	3	12							out:3state TTL		
104	RO3-5120	512	10	SC	MNI	500n	225m	0.0	5.0	.65	2.2§	1.6m	.45	0	7		B181b	ML324
105#	uPD471D	512	10	SC	MNX	315n	704m♦	5.0	12	.80	3.0§	1.6m	.40	0	7		B215	ML☑
106#	FDR146BZ	512	10	SC	MPX	725n	300mt	28	0.0	-9.0	-2.0	20m☑		5	8		E13	ML118b
107#	FDR146Z	512	10	SC	MPX	725n	300mt	28	0.0	-9.0	-2.0	20m☑		5	8		B71	ML41
108	UC65253K#4	1024§	1	SC	MPX	900n	150m♦	5.0	5.0	.80	2.6	1.6m	.40	5	C		B9p	ML31a
109	UC65254K#4	1024§	1	SC	MPX	900n	150m♦	5.0	5.0	.80	2.6	1.6m	.40	5	C		B9p	FL3a
110	UC75253K#4	1024§	1	SC	MPX	900n	150m♦	5.0	5.0	.80	2.6	1.6m	.40	0	7		B9p	ML31a

SYMBOLS AND CODES EXPLAINED IN INTERPRETER

3. READ ONLY MEMORIES (ROMS)

IN ORDER OF (1)No.WDS(2)No.BITS/WD(3)OP.MODE PRG.CODE(4)STRUCT.(5)MAX ACC.TIME(6)TYPE No.

LINE No.	6 TYPE No.	ORGANIZATION 1 No. WORDS	2 BITS PER WORD	3 OP MODE PROG CODE	4 STRUC TURE CODE	5 MAX ACCESS TIME (s)	MAX OPER. POWER DISS. (W)	RATED POWER SUP. SPAN NEG. (V)	POS. (V)	INPUT LOGIC LEVELS MAX '0' (V)	MIN '1' (V)	MIN OUTPUT SINK CURRENT (A)	@ OUT (V)	OPER. TEMP. RANGE CODE -	+	GENERAL DESCRIPTION	DRAWINGS LOGIC/ BLOCK	OUTLINE
1	UC75254K#4	1024$	1	SC	MPX	900n	150m♦	5.0	5.0	.80	2.6	1.6m	.40	0	7		B9p	ML31a
2	UA2525D#4	1024	1	SC	MXX	900n	360m	10	0.0	.80♦	2.7	1.6m	.40	5	C		B9	ML31a
3	UA3525D#4	1024	1	SC	MXX	900n	360m	10	0.0	.80♦	2.7	1.6m	.40	2	7		B9	ML31a
4	UA3525F#4	1024	1	SC	MXX	900n	360m	10	0.0	.80♦	2.7	1.6m	.40	2	7		B9	FL3a
5	UA2548#3	1024	2	SC	MXX	900n	600m	20	0.0	.80♦	2.7	1.6m	.40	5	C		B9a	ML31a
6	UA3548#3	1024	2	SC	MXX	900n	600m	20	0.0	.80♦	2.7	1.6m	.40	2	7		B9a	ML31a
7	HRM2048#2	1024$	2$	SE	TAX	500n	640m♦	0.0	5.0	2.0	.80			0	7	PR Non-Vol RMM	B91	ML113
8	UC6548#2	1024$	2	SS	MXX	1.0u	750m	15	5.0	.60	2.6			5	C		B9e	ML31a
9	UC7548#2	1024$	2	SS	MXX	1.0u	750m	15	5.0	.60	2.6			0	7		B9e	ML31a
10#	FDR131Z#2	1024$	4	DC	MPX	1.5u	90m†	14	0.0	-9.0	-2.0			0	7		B36	ML41
11	TBP24S41J	1024	4	S	BTD	60n	475m†	0.0	5.0	.80	2.0§	16m#		0	7	PROM	PN18bz	ML☑
12	TBP24S41N	1024	4	S	BTD	60n	475m†	0.0	5.0	.80	2.0§	16m#		0	7	PROM	PN18bz	ML☑
13▼	TBP24SA41J	1024	4	S	BTD	60n	475m†	0.0	5.0	.80	2.0Δ	16m#		0	7	PROM	PN18bz	ML☑
14▼	TBP24SA41N	1024	4	S	BTD	60n	475m†	0.0	5.0	.80	2.0Δ	16m#		0	7	PROM		ML☑
15	TBP24S41MJ	1024	4	S	BTD	75n	475m†	0.0	5.0	.80	2.0§	16m#		5	C	PROM	PN18bz	ML☑
16#	N82S136AF	1024	4	SC	BTD	45n	13mt%	0.0	5.0	.85	2.0Δ	16m	.45	0	7	PROM	B212	ML127r
17#	N82S136AN	1024	4	SC	BTD	45n	700m	0.0	5.0	.85	2.0Δ	16m	.45	0	7	PROM	B212	ML132
18#	N82S137AF	1024	4	SC	BTD	45n	13mt%	0.0	5.0	.85	2.0§	16m	.45	0	7	PROM	B212	ML127r
19#	N82S137AN	1024	4	SC	BTD	45n	700m	0.0	5.0	.85	2.0§	16m	.45	0	7	PROM	B212	ML132
20	6252-1J	1024	4	SC	BTD	60n	875m	0.0	5.0	.80	2.0Δ	16m	.50	0	7	ROM	PN18ay	ML278
21	6252-1N	1024	4	SC	BTD	60n	875m	0.0	5.0	.80	2.0Δ	16m	.50	0	7	ROM	PN18ay	ML279
22	6253-1F	1024	4	SC	BTD	60n	875m	0.0	5.0	.80	2.0§	16m	.50	0	7	ROM	PN18ay	FL☑
23	6253-1J	1024	4	SC	BTD	60n	875m	0.0	5.0	.80	2.0§	16m	.50	0	7	ROM	PN18ay	ML278
24	6253-1N	1024	4	SC	BTD	60n	875m	0.0	5.0	.80	2.0§	16m	.50	0	7	ROM	PN18ay	ML279
25	N82S136F	1024	4	SC	BTD	60n	13mt%	0.0	5.5	.80	2.0Δ			0	7	PROM	B212	ML165a
26	N82S136N	1024	4	SC	BTD	60n	700m	0.0	5.0	.85	2.0Δ	16m	.45	0	7	PROM	B212	ML291
27▼#	RC82S136F	1024	4	SC	BTD	60n	13mt%	0.0	5.5	.80	2.0Δ			0	7	PROM	B212	ML165a
28	N8228F	1024	4	SC	BTD	70n	850m	0.0	5.0	.85	2.0	11m	.50	0	7	ROM	B373	ML127r
29	N8228I	1024	4	SC	BTX	70n	850m	0.0	5.0	2.0	.85	11m	.50	0	7		B29	ML107
30#	S82S136AF	1024	4	SC	BTX	70n	700m	0.0	5.0	.80	2.0Δ	16m	.50	5	C	FldProg	B212	ML165a
31#	S82S137AF	1024	4	SC	BTX	70n	700m	0.0	5.0	.80	2.0§	16m	.50	5	C	FldProg	B212	ML165a
32	S82S136F	1024	4	SC	BTX	80n	700m	0.0	5.0	.80	2.0Δ	16m	.50	5	C	Fld Prog	B212	ML165a
33	S82S137F	1024	4	SC	BTX	80n	700m	0.0	5.0	.80	2.0§	16m	.50	5	C	Fld Prog	B212	ML165a
34#	SFF70612KM#2	1024	4	SC	MPA	7.0ut	460mØ	12	5.0	.80	3.0	2.0mt	1.0	5	C		B96	ML95
35#	SFF70612KT#2	1024	4	SC	MPA	7.0ut	460mØ	12	5.0	.80	3.0	2.0mt	1.0	2	8		B96	ML95
36	MCM7642L	1024	4	SE	BTD	40nt		0.0	5.0							Open Coll	B319c	
37	MCM7642P	1024	4	SE	BTD	40nt		0.0	5.0							Open Coll	B319c	
38	MCM7643L	1024	4	SE	BTD	40nt		0.0	5.0							Tri State	B319c	
39	MCM7643P	1024	4	SE	BTD	40nt		0.0	5.0							Tri State	B319c	
40	SN54S476J	1024	4	SE	BTD	40nt	475m	0.0	5.0	.80	2.0§	16m	.50	5	C	PROM	PN18as	ML3b
41	SN54S477J	1024	4	SE	BTD	40nt	475m	0.0	5.0	.80	2.0Δ	16m	.50	5	C	PROM	PN18as	ML3b
42▼	MB7122E	1024	4	SE	BTD	45n	750m	0.0	5.0	0.8	2.0§	40uΔ		0	7	Schott PROM	PN18aw	ML347
43	93452DC	1024	4	SE	BTD	55n	850m	0.0	5.0	.80	2.0Δ	16m	.45	0	7	Field Program	B267	ML194d
44	93452PC	1024	4	SE	BTD	55n	850m	0.0	5.0	.80	2.0Δ	16m	.45	0	7	Field Program	B267	ML3h
45	93453DC	1024	4	SE	BTD	55n	850m	0.0	5.0	.80	2.0§	16m	.45	0	7	Field Program	B267	ML194d
46	93453PC	1024	4	SE	BTD	55n	850m	0.0	5.0	.80	2.0§	16m	.45	0	7	Field Program	B267	ML3h
47▼	6350-1J18	1024	4	SE	BTD	60n	875m	0.0	7.0	.80	2.0Δ	16m	.50	0	7	PROM	PN18cb	ML278
48▼	6351-1J18	1024	4	SE	BTD	60n	875m	0.0	7.0	.80	2.0§	16m	.50	0	7	PROM	PN18cb	ML278
49	6351-1J	1024	4	SE	BTD	60n	875m	0.0	5.0	.80	2.0§	16m	.50	0	7	PROM	B342a	ML278
50▼	6352-1J18	1024	4	SE	BTD	60n	875m	0.0	7.0	.80	2.0Δ	16m	.50	0	7	PROM	PN18az	ML278
51	6352-1J	1024	4	SE	BTD	60n	875m	0.0	5.0	.80	2.0Δ	16m	.50	0	7	PROM	B319a	ML278
52▼	6353-1J18	1024	4	SE	BTD	60n	875m	0.0	7.0	.80	2.0§	16m	.50	0	7	PROM	PN18az	ML278
53	6353-1J	1024	4	SE	BTD	60n	875m	0.0	5.0	.80	2.0§	16m	.50	0	7	PROM	B319a	ML278
54	DM74S572J	1024	4	SE	BTD	60n	700m	0.0	5.0	.80	2.0Δ	16m	.45	0	7	PROM	B222a	ML194e
55	DM74S572N	1024	4	SE	BTD	60n	700m	0.0	5.0	.80	2.0Δ	16m	.45	0	7	PROM	B222a	ML196
56	DM74S573J	1024	4	SE	BTD	60n	700m	0.0	5.0	.80	2.0§	16m	.45	0	7	PROM	B222a	ML194e
57	DM74S573N	1024	4	SE	BTD	60n	700m	0.0	5.0	.80	2.0§	16m	.45	0	7	PROM	B222a	ML194e
58	N82S137F	1024	4	SE	BTD	60n	13mt%	0.0	5.5	.80	2.0§			0	7	PROM	B212	ML165a
59	N82S137N	1024	4	SE	BTD	60n	700m	0.0	5.0	.85	2.0§	16m	.45	0	7	PROM	B212	ML291
60▼#	RC82S137F	1024	4	SE	BTD	60n	13mt%	0.0	5.5	.80	2.0§			0	7	PROM	B212	ML165a
61	93453DM	1024	4	SE	BTD	70n	850m	0.0	5.0	.80	2.0Δ	16m	.45	5	C	Field Program	B267	ML194d
62	93453DM	1024	4	SE	BTD	70n	850m	0.0	5.0	.80	2.0§	16m	.45	5	C	Field Program	B267	ML194d
63	MCM7642D	1024	4	SE	BTD	70n	700m	0.0	5.0	.80	2.0Δ	16m	.45	0	7	PROM	PN18as	ML370
64	MCM7642DC	1024	4	SE	BTD	70n	700m	0.0	5.0	.80	2.0Δ	16m	.45	0	7	PROM	PN18as	ML370
65	MCM7643D	1024	4	SE	BTD	70n	700m	0.0	5.0	.80	2.0§	16m	.45	0	7	PROM	PN18as	ML370
66	MCM7643DC	1024	4	SE	BTD	70n	700m	0.0	5.0	.80	2.0§	16m	.45	0	7	PROM	PN18as	ML370
67▼	5350-1J18	1024	4	SE	BTD	75n	875m	0.0	7.0	.80	2.0Δ	16m	.50	5	C	PROM	PN18cb	ML278
68▼	5351-1J18	1024	4	SE	BTD	75n	875m	0.0	7.0	.80	2.0§	16m	.50	5	C	PROM	PN18cb	ML278
69▼	5352-1J18	1024	4	SE	BTD	75n	875m	0.0	7.0	.80	2.0Δ	16m	.50	5	C	PROM	PN18az	ML278
70▼	5353-1J18	1024	4	SE	BTD	75n	875m	0.0	7.0	.80	2.0§	16m	.50	5	C	PROM	PN18az	ML278
71	DM54S572J	1024	4	SE	BTD	75n	700m	0.0	5.0	.80	2.0Δ	16m	.50	5	C	PROM	B222a	ML194e
72	DM54S573J	1024	4	SE	BTD	75n	700m	0.0	5.0	.80	2.0§	16m	.50	5	C	PROM	B222a	ML194e
73	JANM38510/20601BVB	1024	4	SE	BTD	85n$	794m	0.0	5.0	.80	2.0Δ	12m	.50	5	C	PROM	B405	ML255
74	JANM38510/20601CVB	1024	4	SE	BTD	85n$	794m	0.0	5.0	.80	2.0Δ	12m	.50	5	C	PROM	B405	ML255
75	JANM38510/20602BVB	1024	4	SE	BTD	85n$	794m	0.0	5.0	.80	2.0§	12m	.50	5	C	PROM	B405	ML255
76	JANM38510/20602CVB	1024	4	SE	BTD	85n$	794m	0.0	5.0	.80	2.0§	12m	.50	5	C	PROM	B405	ML255
77	MCM7642DM	1024	4	SE	BTD	85n	700m	0.0	5.0	.80	2.0Δ	16m	.45	5	C	PROM	PN18as	ML370
78	MCM7643DM	1024	4	SE	BTD	85n	700m	0.0	5.0	.80	2.0§	16m	.45	5	C	PROM	PN18as	ML370
79	AM27S32DC	1024	4	SE	BTD	55 Ø	700m	0.0	5.0	.80	2.0Δ	16m	.45	0	7	PROM	B451	ML194f
80	AM27S32PC	1024	4	SE	BTD	55 Ø	700m	0.0	5.0	.80	2.0Δ	16m	.45	0	7	PROM	B451	ML3I
81	AM27S33DC	1024	4	SE	BTD	55 Ø	700m	0.0	5.0	.80	2.0§	16m	.45	0	7	PROM	B451	ML194f
82	AM27S33PC	1024	4	SE	BTD	55 Ø	700m	0.0	5.0	.80	2.0§	16m	.45	0	7	PROM	B451	ML3I
83	AM27S32DM	1024	4	SE	BTD	70 Ø	725m	0.0	5.0	.80	2.0Δ	16m	.45	5	C	PROM	B451	ML194f
84	AM27S33DM	1024	4	SE	BTD	70 Ø	725m	0.0	5.0	.80	2.0§	16m	.45	5	C	PROM	B451	ML194f
85#	HN25044	1024	4	SE	BTX	50n	500m	0.0	5.0	.80	2.0Δ	40uΔ	.40	2	7	PR	B414	ML☑
86#	HN25045	1024	4	SE	BTX	50n	500m	0.0	5.0	.80	2.0§	40uΔ	.40	2	7	PR	B414	ML☑
87#	uPB406D	1024	4	SE	BTX	70nØ	750m	.50	7.0	.80	2.0§	16m	.45	2	7		B414	ML226c
88#	uPB426D	1024	4	SE	BTX	70nØ	750m	.50	7.0	.80	2.0§	16m	.45	2	7		B414	ML226c
89	C3625A-1	1024	4	SE	BXX	50n	700m	0.0	5.0	.85	2.0§	15m	.45	0	7	PROM	B214	ML360
90	IM6653AIDG	1024	4	SE	MCX	300n	5.0ut♦	0.0	10	.80	8.0§	1.0uΔ		4	8	EPROM	B464	ML404
91	IM6653AIJG	1024	4	SE	MCX	300n	5.0ut♦	0.0	10	.80	8.0§	1.0uΔ		4	8	EPROM	B464	ML403
92	IM6653IDG	1024	4	SE	MCX	550n	5.0ut♦	0.0	5.0	.80	3.0§	1.0uΔ		4	8	EPROM	B464	ML404
93	IM6653IJG	1024	4	SE	MCX	550n	5.0ut♦	0.0	5.0	.80	3.0§	1.0uΔ		4	8	EPROM	B464	ML403
94▼	IM6653AMJG	1024	4	SE	MCX	600n	240m	0.0	6.0	.80	4.0§	1.0uΔ		5	C	EPROM	B464	ML403
95	IM6653MDG	1024	4	SE	MCX	600n	5.0ut♦	0.0	5.0	.80	3.0§	1.0uΔ		5	C	EPROM	B464	ML404
96	IM6653MJG	1024	4	SE	MCX	600n	5.0ut♦	0.0	5.0	.80	3.0§	1.0uΔ		5	C	EPROM	B464	ML403
97	ER3400	1024	4	SE	MPN	650n	535m	30	5.0	.80	3.5§	2.0m	.40	0	7	EAROM	B240	ML242
98	NC7451	1024	4	SE	MPN	900n	575m	30	5.0	.80	3.5§	2.0m	.40	0	7	EAROM	B410	ML☑
99#	uPD472D	1024	5	SC	MNX	315n	704m♦	5.0	12	.80	3.0§	1.6m	.40	0	7		B216	ML☑
100	SN74LS479J	1024	8		BTD	80nt	350mt	0.0	5.0	.80	2.0Δ	8.0m	.45	0	7	PROM	PN24ag	ML30k
101	SN74LS479N	1024	8		BTD	80nt	350mt	0.0	5.0	.80	2.0Δ	8.0m	.45	0	7	PROM	PN24ag	ML72f
102#	RC82S280I	1024	8		BTD	100n	750m	0.0	5.0	.80	2.0Δ	9.6m$	.50	5	C		B131	ML256
103#	RC82S281I	1024	8		BTD	100n	750m	0.0	5.0	.80	2.0Δ	9.6m$	.50	5	C		B131	ML256
104	29631ADC	1024	8	S		50n	850m	0.0	5.0	.50	2.4§	16m	.50	0	7	PROM	B304	ML183c

SYMBOLS AND CODES EXPLAINED IN INTERPRETER

3. READ ONLY MEMORIES (ROMS)

IN ORDER OF (1)No.WDS(2)No.BITS/WD(3)OP.MODE PRG.CODE(4)STRUCT.(5)MAX ACC.TIME(6)TYPE No.

LINE No.	6 TYPE No.	ORGANIZATION 1 No. WORDS	2 BITS PER WORD	3 OP MODE PROG CODE	4 STRUC TURE CODE	5 MAX ACCESS TIME (s)	MAX OPER. POWER DISS. (W)	RATED POWER SUP. SPAN NEG. (V)	POS. (V)	INPUT LOGIC LEVELS MAX '0' (V)	MIN '1' (V)	MIN OUTPUT SINK CURRENT (A)	@ OUT (V)	OPER. TEMP. RANGE CODE -	+	GENERAL DESCRIPTION	DRAWINGS LOGIC/ BLOCK	OUTLINE
1	29633ADC	1024	8	S		55n	150m	0.0	5.0	.50	2.4§	16m	.50	0	7	PROM; Pwr Sw	B304	ML183c
2	29631ADM	1024	8	S		60n	850m	0.0	5.0	.50	2.4§	16m	.50	5	C	PROM	B304	ML183c
3	29633ADM	1024	8	S		75n	150m	0.0	5.0	.50	2.4§	16m	.50	5	C	PROM; Pwr Sw	B304	ML183c
4	TBP28R85J	1024	8	S	BTD	20n†	600m	0.0	5.0	.80		16m#		0	7	PROM	PN24iz	ML☑
5	TBP28R85N	1024	8	S	BTD	20n†	600m	0.0	5.0	.80		16m#		0	7	PROM	PN24iz	ML☑
6	TBP28P85J	1024	8	S	BTD	35n†	550m	0.0	5.0	.80	2.0§	16m#		0	7	PROM Pwr Sw	PN24iy	ML☑
7	TBP28P85N	1024	8	S	BTD	35n†	550m	0.0	5.0	.80	2.0§	16m#		0	7	PROM Pwr Sw	PN24iy	ML☑
8	TBP28S85J	1024	8	S	BTD	35n†	550m†	0.0	5.0	.80	2.0§	16m#		0	7	PROM	PN24iw	ML☑
9	TBP28S85N	1024	8	S	BTD	35n†	550m†	0.0	5.0	.80	2.0§	16m#		0	7	PROM	PN24iw	ML☑
10	TBP28L85J	1024	8	S	BTD	65n†	275m†	0.0	5.0	8.0	2.0§	8.0m#		0	7	PROM	PN24iw	ML☑
11	TBP28L85N	1024	8	S	BTD	65n†	275m†	0.0	5.0	8.0	2.0§	8.0m#		0	7	PROM	PN24iw	ML☑
12	TBP28S86J	1024	8	S	BTD	70n	625m†	0.0	5.0	.80	2.0§	12m#		0	7	PROM	PN24iw	ML☑
13	TBP28S86N	1024	8	S	BTD	70n	625m†	0.0	5.0	.80	2.0§	12m#		0	7	PROM	PN24iw	ML☑
14	TBP28SA86J	1024	8	S	BTD	70n	625m†	0.0	5.0	.80	2.0Δ	12m#		0	7	PROM	PN24iw	ML☑
15	TBP28SA86N	1024	8	S	BTD	70n	625m†	0.0	5.0	.80	2.0Δ	12m#		0	7	PROM	PN24iw	ML☑
16	TBP28L86J	1024	8	S	BTD	130n	350m†	0.0	5.0	8.0	2.0§	8.0m#		0	7	PROM	PN24iw	ML☑
17	TBP28L86N	1024	8	S	BTD	130n	350m†	0.0	5.0	8.0	2.0§	8.0m#		0	7	PROM	PN24iw	ML☑
18	TBP28L86MJ	1024	8	S	BTD	175n	350m†	0.0	5.0	8.0	2.0§	8.0m#		5	C	PROM	PN24iw	ML☑
19#	M5L2708K	1024	8	S	MNG	450n	600m†	5.0	12					0	7	EPROM;Fld Prg		DL☑
20#	M5L2708K65	1024	8	S	MNG	650n	600m†	5.0	12					0	7	EPROM;Fld Prg		DL☑
21	MCM7680CDC	1024	8	S	MTD	70n	4.5 ☑	0.0	5.0	0.8	2.0Δ	100m☑		0	6	PROM		ML319
22	MCM7680CDM	1024	8	S	MTD	70n	4.5 ☑	0.0	5.0	0.8	2.0Δ	100m☑		5	C	PROM		ML319
23	MCM7681CDC	1024	8	S	MTD	85n	4.5 ☑	0.0	5.0	0.8	2.0§	100m☑		0	6	PROM		ML319
24	MCM7681CDM	1024	8	S	MTD	85n	4.5 ☑	0.0	5.0	0.8	2.0§	100m☑		5	C	PROM		ML319
25	AM27S80DC	1024	8	SC		90n†Ø	600n	0.0	5.0	.80	2.0Δ	16m	.45	0	7		B450	ML☑
26	AM27S80DM	1024	8	SC		90n†Ø	600m	0.0	5.0	.80	2.0Δ	16m	.45	5	C		B450	ML☑
27	AM27S80XX	1024	8	SC		90n†Ø	600m	0.0	5.0	.80	2.0Δ	16m	.45	5	C		B450	DI☑
28	AM27S81DC	1024	8	SC		90n†Ø	600m	0.0	5.0	.80	2.0§	16m	.45	0	7		B450	ML☑
29	AM27S81DM	1024	8	SC		90n†Ø	600m	0.0	5.0	.80	2.0§	16m	.45	5	C		B450	ML☑
30	AM27S81XX	1024	8	SC		90n†Ø	600m	0.0	5.0	.80	2.0§	16m	.45	5	C		B450	DI☑
31	93454DC	1024	8	SC	BTD	45n	750m♦	0.0	5.0	.80	2.0	16m	.45	0	7		B162	ML193
32	93454FC	1024	8	SC	BTD	45n	750m♦	0.0	5.0	.80	2.0Δ	16m	.45	0	7		B162	FL3c
33	93454PC	1024	8	SC	BTD	45n	750m♦	0.0	5.0	.80	2.0	16m	.45	0	7		B162	ML216
34	93464DC	1024	8	SC	BTD	45n	750m♦	0.0	5.0	.80	2.0§	16m	.45	0	7		B162	ML193
35	93464FC	1024	8	SC	BTD	45n	750m♦	0.0	5.0	.80	2.0§	16m	.45	0	7		B162	FL3c
36	93464PC	1024	8	SC	BTD	45n	750m♦	0.0	5.0	.80	2.0§	16m	.45	0	7		B162	ML216
37	93454DM	1024	8	SC	BTD	60n	750m♦	0.0	5.0	.80	2.0	16m	.45	5	C		B162	ML193
38	93454FM	1024	8	SC	BTD	60n	750m♦	0.0	5.0	.80	2.0	16m	.45	5	C		B162	FL3c
39	93464DM	1024	8	SC	BTD	60n	750m♦	0.0	5.0	.80	2.0§	16m	.45	5	C		B162	ML193
40	93464FM	1024	8	SC	BTD	60n	750m♦	0.0	5.0	.80	2.0§	16m	.45	5	C		B162	FL3c
41	MCM7680DCL	1024	8	SC	BTD	70n		0.0	5.0	.80	2.0Δ	100uΔ	5.0	0	7	PROM	PN24dw	ML319
42	MCM7681DCL	1024	8	SC	BTD	70n		0.0	5.0	.80	2.0§			0	7	PROM	PN24dw	ML319
43	N82S280F	1024	8	SC	BTD	70n	700m	0.0	5.0	.85	2.0Δ	9.6m	.45	0	7	ROM	B131	ML133
44#	N82S280I	1024	8	SC	BTD	70n	750m	0.0	5.0	.85	2.0Δ	9.6m$	.45	0	7		B131	ML256
45	N82S280N	1024	8	SC	BTD	70n	700m	0.0	5.0	.85	2.0Δ	9.6m	.45	0	7	ROM	B131	ML135
46	N82S281F	1024	8	SC	BTD	70n	700m	0.0	5.0	.85	2.0§	9.6m	.45	0	7	ROM	B131	ML133
47#	N82S281I	1024	8	SC	BTD	70n	750m	0.0	5.0	.85	2.0§	9.6m$	.45	0	7		B131	ML256
48	N82S281N	1024	8	SC	BTD	70n	700m	0.0	5.0	.85	2.0§	9.6m	.45	0	7	ROM	B131	ML135
49	MCM7680DML	1024	8	SC	BTD	85n		0.0	5.0	.80	2.0Δ	100uΔ	5.0	5	C	PROM	PN24dw	ML319
50	MCM7681DML	1024	8	SC	BTD	85n		0.0	5.0	.80	2.0§			5	C	PROM	PN24dw	ML319
51	S82S280F	1024	8	SC	BTD	100n	750m	0.0	5.0	.80	2.0Δ	9.6m	.50	5	C	ROM	B131	ML133
52#	S82S280I	1024	8	SC	BTD	100n	750m	0.0	5.0	.80	2.0Δ	9.6m$	.50	5	C		B131	ML256
53	S82S281F	1024	8	SC	BTD	100n	750m	0.0	5.0	.80	2.0§	9.6m	.50	5	C	ROM	B131	ML133
54#	S82S281I	1024	8	SC	BTD	100n	750m	0.0	5.0	.80	2.0§	9.6m$	.50	5	C		B131	ML256
55	HCMP1833D	1024	8	SC	MCG	350n†	120m†	0.0	10					5	C			
56	HCMP1834D	1024	8	SC	MCG	350n†	15m†	0.0	10					5	C			
57	HCMP1833CD	1024	8	SC	MCG	850n†	120m†	0.0	5.0					5	C			
58	HCMP1834CD	1024	8	SC	MCG	850n†	15m†	0.0	5.0					5	C			
59	CDP1833CD	1024	8	SC	MCX	350n	5.5k♦	0.5	7.0#	1.5	3.5	.80	.40	4	8	PR	A498	ML140
60	CDP1833CE	1024	8	SC	MCX	350n	5.5k♦	0.5	7.0#	1.5	3.5	.80	.40	4	8	PR	A498	MO015AA
61	CDP1833D	1024	8	SC	MCX	350n	1.1k♦	0.5	11#	1.5	3.5	.80	.40	4	8	PR	A498	ML140
62	CDP1833E	1024	8	SC	MCX	350n	1.1k♦	0.5	11#	1.5	3.5	.80	.40	4	8	PR	A498	MO015AA
63	CDP1834CD	1024	8	SC	MCX	350n	5.5k♦	0.5	7.0#	1.5	3.5	.80	.40	4	8	PR	A498	ML140
64	CDP1834CE	1024	8	SC	MCX	350n	5.5k♦	0.5	7.0#	1.5	3.5	.80	.40	4	8	PR	A498	MO015AA
65	CDP1834D	1024	8	SC	MCX	350n	1.1k♦	0.5	11#	1.5	3.5	.80	.40	4	8	PR	A498	ML140
66	CDP1834E	1024	8	SC	MCX	350n	1.1k♦	0.5	11#	1.5	3.5	.80	.40	4	8	PR	A498	MO015AA
67▼	HCMP1833D#	1024	8	SC	MCX	350n†	30m†	0.0	12	.30	7.0	.80	.40	5	C	ROM	B354a	
68▼	HCMP1833P	1024	8	SC	MCX	350n†	30m†	0.0	12	3.0	7.0	.80	.40	4	8	ROM	B354a	
69▼	HCMP1834D#	1024	8	SC	MCX	350n†	30m†	0.0	12	3.0	7.0	800m	.40	5	C	ROM	B472	
70▼	HCMP1834CP	1024	8	SC	MCX	575n†	10m†	0.0	6.5	1.5	3.5	800m	.40	4	8	ROM	B472	
71▼	HCMP1834P	1024	8	SC	MCX	850n†	30m†	0.0	12	3.0	7.0	800m	.40	4	8	ROM	B472	
72♦	EA4700DC	1024	8	SC	MNA	350n	800m	0.0	5.0	.80	2.2§	1.6m	.40	0	7		B468	ML168
73♦	EA4700PC	1024	8	SC	MNA	350n	1.2	0.0	5.0	.80	2.2§	1.6m	.40	0	7		B468	ML214
74	EA2308AC	1024	8	SC	MNA	400n	1.2	0.0	5.0	.80	2.2§	2.0m	.45	0	7		B190	ML214
75♦	EA2308AP	1024	8	SC	MNA	400n	800m	0.0	5.0	.80	2.2§	2.0m	.45	0	7		B468	ML168
76	EA8308AC	1024	8	SC	MNA	400n	1.2	0.0	5.0	.80	2.2§	2.0m	.45	0	7		B190	ML214
77	EA8308AP	1024	8	SC	MNA	400n	800m	0.0	5.0	.80	2.2§	2.0m	.45	0	7		B190	ML168
78	MCM68B30AC	1024	8	SC	MNG	250n	650m	0.0	5.0	.80	2.0§	1.6m	.40	0	7		B187	ML319
79	MCM68B30AP	1024	8	SC	MNG	250n	650m	0.0	5.0	.80	2.0§	1.6m	.40	0	7		B187	ML39
80	MCM68B308C	1024	8	SC	MNG	250n	650m	0.0	5.0	.80	2.0§	1.6m	.40	0	7		B290	ML319
81	MCM68B308L	1024	8	SC	MNG	250n	650m	0.0	5.0	0.8	2.0§			0	6		B290	ML256
82	MCM68B308P	1024	8	SC	MNG	250n	650m	0.0	5.0	.80	2.0§	1.6m	.40	0	7		B290	ML39
83	AM9208CDC	1024	8	SC	MNG	300n	1.0	0.0	5.0	.80	2.4	3.2m	.40	0	7		B188	ML207c
84	MCM68A30AC	1024	8	SC	MNG	350n	650m	0.0	5.0	.80	2.0§	1.6m	.40	0	7		B187	ML319
85	MCM68A30AP	1024	8	SC	MNG	350n	650m	0.0	5.0	.80	2.0§	1.6m	.40	0	7		B187	ML39
86	MCM68A308C	1024	8	SC	MNG	350n	650m	0.0	5.0	.80	2.0§	1.6m	.40	0	7		B290	ML319
87	MCM68A308L	1024	8	SC	MNG	350n	650m	0.0	5.0	0.8	2.0§			0	6		B290	ML256
88	MCM68A308P	1024	8	SC	MNG	350n	650m	0.0	5.0	.80	2.0§	1.6m	.40	0	7		B290	ML39
89	MCM65308L	1024	8	SC	MNG	350n	1.0	5.0	12	0.8	4.0§			0	6		B452	ML256
90	MCM65308P	1024	8	SC	MNG	350n	1.0	5.0	12		4.0§			0	6		B452	ML133
91	AM9208BDC	1024	8	SC	MNG	400n	1.0	0.0	5.0	.80	2.4	3.2m	.40	0	7		B188	ML207c
92	AM9208BDM	1024	8	SC	MNG	400n	1.0	0.0	5.0	.80	2.6	3.2m	.40	5	C		B188	ML207c
93	uPD2308AC	1024	8	SC	MNG	450n		0.0	5.0	.80	2.0§	10uΔ		1	7	PROM		ML118f
94	uPD2308AD	1024	8	SC	MNG	450n		0.0	5.0	.80	2.0§	10uΔ		1	7	PROM		ML381
95	MCM6830AL	1024	8	SC	MNG	500n		0.0	5.0	.80	2.0§	10uΔ	.40	0	7	PROM	B187	ML150a
96	MCM68308L	1024	8	SC	MNG	500n	650m	0.0	5.0	0.8	2.0§			0	6		B453	ML256
97	MCM68308P	1024	8	SC	MNG	500n	650m	0.0	5.0	0.8	2.0§			0	6		B453	M133
98#	uPD465D	1024	8	SC	MNG	500n	311m†	5.0	12	.70	3.0§	1.7m	.50	1	7		B420	ML366
99	2608I	1024	8	SC	MNG	550n	400m	0.0	5.0	.65	2.2§	1.6m	.45	0	7		B195	ML256
100	MCM6560L#1	1024	8	SC	MNX	350n	1.0	3.0	12	.80	4.0§	1.6m	.40	0	7		B121	ML150
101	MCM6560P#1	1024	8	SC	MNX	350n	1.0	3.0	12	.80	4.0§	1.6m	.40	0	7		B121	ML39
102▼	NCM6560AL	1024	8	SC	MNX	350n	600m†	3.0	12	.80	3.0§	1.6m	.40	0	7		B121	ML434
103▼	NCM6560AP	1024	8	SC	MNX	350n	600m†	3.0	12	.80	3.0§	1.6m	.40	0	7		B121	ML434
104#	uPD2308C	1024	8	SC	MNX	450n	545m	5.0	12	.80	2.4§	2.0m	.45	1	7		B422	ML369
105#	uPD2308D	1024	8	SC	MNX	450n	545m	5.0	12	.80	2.4§	2.0m	.45	1	7		B422	ML72g
106♦	EA2308AL	1024	8	SC	MNX	550n	825m	0.0	5.0	2.2	0.8§	100uΔ		5	9	2CS	B468	ML133e
107	EA4700DL	1024	8	SC	MNX	550n	825m	0.0	5.0	2.2	0.8§	100uΔ		5	9	4CS		ML133e
108♦	EA8308AL	1024	8	SC	MNX	550n	825m	0.0	5.0	2.2	0.8§	100uΔ		5	9	2CS	B468	ML133e
109#	MSM3770A	1024	8	SC	MNX	600n	745m	5.0	12	.65	2.2§	1.6m	.45	0	7	PROM	PN24ai	ML128
110	D2758	1024	8	SE		450n	525m	0.0	5.0	.80	2.0§	2.1m	.45	0	7	EPROM	B298	ML359d

SYMBOLS AND CODES EXPLAINED IN INTERPRETER

3. READ ONLY MEMORIES (ROMS)

IN ORDER OF (1)No.WDS(2)No.BITS/WD(3)OP.MODE PRG.CODE(4)STRUCT.(5)MAX ACC.TIME(6)TYPE No.

LINE No.	6 TYPE No.	ORGANIZATION 1 No. WORDS	2 BITS PER WORD	3 OP MODE PROG CODE	4 STRUC TURE CODE	5 MAX ACCESS TIME (s)	MAX OPER. POWER DISS. (W)	RATED POWER SUP. SPAN NEG. (V)	POS. (V)	INPUT LOGIC LEVELS MAX '0' (V)	MIN '1' (V)	MIN OUTPUT SINK CURRENT (A)	@ OUT (V)	OPER. TEMP. RANGE CODE -	+	GENERAL DESCRIPTION	DRAWINGS LOGIC/ BLOCK	OUTLINE
1	93450DC	1024	8	SE	BTD	40n△†		0.0	5.0	.80	2.0△	16m	.45	0	7	Field Program	B161a	ML193
2	93450DM	1024	8	SE	BTD	40n△†		0.0	5.0	.80	2.0△	16m	.45	5	C	Field Program	B161a	ML193
3	93450FC	1024	8	SE	BTD	40n△†		0.0	5.0	.80	2.0△	16m	.45	0	7	Field Program	B161a	FL3c
4	93450PC	1024	8	SE	BTD	40n△†		0.0	5.0	.80	2.0△	16m	.45	0	7	Field Program	B161a	ML216
5	93451DC	1024	8	SE	BTD	40n△†		0.0	5.0	.80	2.0$	16m	.45	0	7	Field Program	B161a	ML193
6	93451DM	1024	8	SE	BTD	40n△†		0.0	5.0	.80	2.0$	16m	.45	5	C	Field Program	B161a	ML193
7	93451FC	1024	8	SE	BTD	40n△†		0.0	5.0	.80	2.0$	16m	.45	0	7	Field Program	B161a	FL3c
8	93451PC	1024	8	SE	BTD	40n△†		0.0	5.0	.80	2.0$	16m	.45	0	7	Field Program	B161a	ML216
9	MCM7660L	1024	8	SE	BTD	40n†		0.0	5.0							Open Coll	B455	
10	MCM7660P	1024	8	SE	BTD	40n†		0.0	5.0							Open Coll	B455	
11	MCM7661L	1024	8	SE	BTD	40n†		0.0	5.0							Tri State	B455	
12	29631DC	1024	8	SE	BTD	45n†Ø	850m	0.0	5.0	.80	2.0$	16m	.50	0	7	PROM	B314	ML☑
13	29631DM	1024	8	SE	BTD	45n†Ø	850m	0.0	5.0	.80	2.0$	16m	.50	5	C	PROM	B314	ML☑
14	29635DC	1024	8	SE	BTD	45n†Ø	850m	0.0	5.0	.80	2.0$	16m	.50	0	7	PROM	B315	ML☑
15	29635DM	1024	8	SE	BTD	45n†Ø	850m	0.0	5.0	.80	2.0$	16m	.50	5	C	PROM	B315	ML☑
16	SN54S478J	1024	8	SE	BTD	45n†	625m	0.0	5.0	.80	2.0$	4.0m	.50	5	C	PROM	PN24ag	ML30k
17	SN54S479J	1024	8	SE	BTD	45n†	625m	0.0	5.0	.80	2.0△	4.0m	.50	5	C	PROM	PN24ag	ML30k
18	SN54S2708J	1024	8	SE	BTD	45n†	625m	0.0	5.0	.80	2.0$	12m	.50	5	C	PROM	PN24ec	ML30k
19	SN54S3708J	1024	8	SE	BTD	45n†	625m	0.0	5.0	.80	2.0△	12m	.50	5	C	PROM	PN24ec	ML30k
20	SN74S479J	1024	8	SE	BTD	45n†	625m†	0.0	5.0	.80	2.0△	12m	.50	0	7	PROM	PN24ag	ML30k
21	SN74S3708J	1024	8	SE	BTD	45n†	625m†	0.0	5.0	.80	2.0△	12m	.50	0	7	PROM	PN24ec	ML30k
22	SN74S3708N	1024	8	SE	BTD	45n†	625m†	0.0	5.0	.80	2.0△	12m	.50	0	7	PROM	PN24ec	ML72f
23▼	29631FM	1024	8	SE	BTD	50n	1.4 ☑	0.5#	7.0#	0.8	2.0$	100u	4.5	5	C	CS;PROM;Pwr Sw	B304	FL79
24	29633DC	1024	8	SE	BTD	50n†Ø	850m	0.0	5.0	.80	2.0$	16m	.50	0	7	PROM;Pwr Sw	B314a	ML☑
25	29633DM	1024	8	SE	BTD	50n†Ø	850m	0.0	5.0	.80	2.0$	16m	.50	5	C	PROM;Pwr Sw	B314a	ML☑
26	29637DC	1024	8	SE	BTD	50n†Ø	850m	0.0	5.0	.80	2.0$	16m	.50	0	7	PROM;Pwr Sw	B315a	ML☑
27	29637DM	1024	8	SE	BTD	50n†Ø	850m	0.0	5.0	.80	2.0$	16m	.50	5	C	PROM;Pwr Sw	B315a	ML☑
28	D3628A-1	1024	8	SE	BTD	50n	.08m†%	0.0	5.0	.80	2.0$	40u△	5.5	0	7	PROM	B246	ML359d
29▼	6280-2J24	1024	8	SE	BTD	55n	850m	0.0	7.0	.80	2.0△	10m	.50	0	7	ROM	PN24es	ML276
30▼	6281-2J24	1024	8	SE	BTD	55n	900m	0.0	7.0	.80	2.0$	10m	.50	0	7	ROM	PN24es	ML276
31▼	29633FM	1024	8	SE	BTD	55n	1.4 ☑	0.5#	7.0#	0.8	2.0$	100u	4.5	5	C	CS;PROM;Pwr Sw	PN24dx	FL79
32▼	29631AFM	1024	8	SE	BTD	60n	1.4 ☑	0.5#	7.0#	0.8	2.0$	100u	4.5	5	C	CS;PROM;Pwr Sw	B304	FL79
33▼	AM27S180DC	1024	8	SE	BTD	60n		0.0	5.0	.80	2.0△	16m	.50	0	7	PROM	B477	ML88d
34▼	AM27S181DC	1024	8	SE	BTD	60n		0.0	5.0	.80	2.0$	16m	.50	0	7	PROM	B477	ML88d
35	D3628A	1024	8	SE	BTD	60n	.08m†%	0.0	5.0	.80	2.0$	40u△	5.5	0	7	PROM	B246	ML359d
36	HM1-7680RP5	1024	8	SE	BTD	60n	850m	0.0	5.0	.80	2.0△	16m	.50	0	7	PROM,Latch/PD	B391a	ML310
37	HM3-7681RP5	1024	8	SE	BTD	60n	850m	0.0	5.0	.80	2.0$	16m	.50	0	7	PROM,Latch/PD	B391a	ML311
38#	HN25088	1024	8	SE	BTD	60n		0.0	5.0	.80	2.0			0	7	PROM	B304	ML187
39#	HN25089	1024	8	SE	BTD	60n		0.0	5.0	.80	2.0			0	7	PROM	B304	ML187☑
40	DM77S180J	1024	8	SE	BTD	70n	800m	0.0	5.0	.80	2.0	16m	.50	5	C	PROM	B435	ML200
41	DM77S181J	1024	8	SE	BTD	70n	800m	0.0	5.0	.80	2.0$	16m	.50	5	C	PROM	B435	ML200
42	DM87S180J	1024	8	SE	BTD	70n	800m	0.0	5.0	.80	2.0△	16m	.45	0	7	PROM	B435	ML200
43	DM87S180N	1024	8	SE	BTD	70n	800m	0.0	5.0	.80	2.0△	16m	.45	0	7	PROM	B435	ML133a
44	DM87S181J	1024	8	SE	BTD	70n	800m	0.0	5.0	.80	2.0$	16m	.45	0	7	PROM	B435	ML200
45	DM87S181N	1024	8	SE	BTD	70n	800m	0.0	5.0	.80	2.0$	16m	.45	0	7	PROM	B435	ML200
46	MCM7680DC	1024	8	SE	BTD	70n	750m	0.0	5.0	.80	2.0△	16m	.45	0	7	PROM	PN24ao	ML319
47	MCM7681DC	1024	8	SE	BTD	70n	750m	0.0	5.0	.80	2.0$	16m	.45	0	7	PROM	PN24ao	ML319
48▼	5280-2J24	1024	8	SE	BTD	75n	850m	0.0	7.0	.80	2.0△	10m	.50	5	C	ROM	PN24es	ML276
49▼	5281-2J24	1024	8	SE	BTD	75n	900m	0.0	7.0	.80	2.0$	10m	.50	5	C	ROM	PN24es	ML276
50▼	29633AFM	1024	8	SE	BTD	75n	1.4 ☑	0.5#	7.0#	0.8	2.0$	100u	4.5	5	C	CS;PROM;Pwr Sw	PN24dx	FL79
51▼	AM27S180DM	1024	8	SE	BTD	80n		0.0	5.0	.80	2.0△	16m	.50	5	C	PROM	B477	ML88d0
52▼	AM27S181DM	1024	8	SE	BTD	80n		0.0	5.0	.80	2.0$	16m	.50	5	C	PROM	B477	ML88d
53	D3628	1024	8	SE	BTD	80n	950m♦	0.0	5.0	.85	2.0$	10m	.45	0	7	PROM	B246	ML359d
54	HM3-7680RP2	1024	8	SE	BTD	80n	850m	0.0	5.0	.80	2.0△	16m	.50	5	C	PROM,Latch/PD	B391a	ML311
55	SN54LS478J	1024	8	SE	BTD	80n†	350m†	0.0	5.0	.80	2.0$	4.0m	.50	5	C	PROM	PN24ag	ML30k
56	SN54LS479J	1024	8	SE	BTD	80n†	350m†	0.0	5.0	.80	2.0△	4.0m	.50	5	C	PROM	PN24ag	ML30k
57	MCM7680DM	1024	8	SE	BTD	85n	850m	0.0	5.0	.80	2.0△	16m	.45	5	C	PROM	PN24ao	ML319
58	MCM7681DM	1024	8	SE	BTD	85n	850m	0.0	5.0	.80	2.0$	16m	.45	5	C	PROM	PN24ao	ML319
59▼	6380-1J24	1024	8	SE	BTD	90n	950m	0.0	7.0	.80	2.0△	12m	.50	0	7	PROM	PN24ed	ML276
60	JANM38510/20903BJB	1024	8	SE	BTD	90n$	925m	0.0	5.0	.80	2.0△	8.0m	.50	5	C	PROM	B361	ML126
61	JANM38510/20903CJB	1024	8	SE	BTD	90n$	925m	0.0	5.0	.80	2.0△	8.0m	.50	5	C	PROM	B361	ML126
62	JANM38510/20904BJB	1024	8	SE	BTD	90n$	925m	0.0	5.0	.80	2.0$	8.0m	.50	5	C	PROM	B361	ML126
63	JANM38510/20904CJB	1024	8	SE	BTD	90n$	925m	0.0	5.0	.80	2.0$	8.0m	.50	5	C	PROM	B361	ML126
64▼	5282-1J24	1024	8	SE	BTD	100n	850m	0.0	7.0	.80	2.0△	10m	.50	5	C	ROM	PN24es	ML276
65▼	5283-1J24	1024	8	SE	BTD	100n	900m	0.0	7.0	.80	2.0$	10m	.50	5	C	ROM	PN24es	ML276
66▼	6280-1J24	1024	8	SE	BTD	100n	850m	0.0	7.0	.80	2.0△	10m	.50	0	7	ROM	PN24es	ML276
67▼	6281-1J24	1024	8	SE	BTD	100n	900m	0.0	7.0	.80	2.0$	10m	.50	0	7	ROM	PN24es	ML276
68▼	6282-1J24	1024	8	SE	BTD	100n	850m	0.0	7.0	.80	2.0△	10m	.50	0	7	ROM	PN24es	ML276
69▼	6283-1J24	1024	8	SE	BTD	100n	900m	0.0	7.0	.80	2.0$	10m	.50	0	7	ROM	PN24es	ML276
70	D3628-4	1024	8	SE	BTD	100n	950m♦	0.0	5.0	.85	2.0$	10m	.45	0	7	PROM	B246	ML359d
71▼	5380-1J24	1024	8	SE	BTD	125n	900m	0.0	7.0	.80	2.0△	12m	.50	5	C	PROM	PN24ed	ML276
72▼	5381-1J24	1024	8	SE	BTD	125n	900m	0.0	7.0	.80	2.0$	12m	.50	5	C	PROM	PN24ed	ML276
73▼	5280-1J24	1024	8	SE	BTD	175n	850m	0.0	7.0	.80	2.0△	10m	.50	5	C	ROM	PN24es	ML276
74▼	5281-1J24	1024	8	SE	BTD	175n	900m	0.0	7.0	.80	2.0$	10m	.50	5	C	ROM	PN24es	ML276
75	N82LS181F	1024	8	SE	BTD	175n	400m	0.0	5.0	.85	2.0$	4.8m	.45	0	7	PROM	B304	ML133
76	N82LS181N	1024	8	SE	BTD	175n	400m	0.0	5.0	.85	2.0$	4.8m	.45	0	7	PROM	B304	ML135
77	MCM82707L	1024	8	SE	BTX	40n†		0.0	5.0	.80	2.0△	15m				PROM	PN24ec	ML319
78	MCM82707P	1024	8	SE	BTX	40n†		0.0	5.0	.80	2.0△	15m				PROM	PN24ec	ML39
79	MCM82708L	1024	8	SE	BTX	40n†		0.0	5.0	.80	2.0$	15m				PROM	PN24ec	ML319
80	MCM82708P	1024	8	SE	BTX	40n†		0.0	5.0	.80	2.0$	15m				PROM	PN24ec	ML39
81#	N82S182F	1024	8	SE	BTX	60n	85ut%	0.0	5.0	.85	2.0△	9.6m	.45	0	7	PROM	B425	ML133
82#	N82S182N	1024	8	SE	BTX	60n	875m	0.0	5.0	.85	2.0△	96m	.45	0	7	PROM	B425	ML135
83	MCM7680LDC	1024	8	SE	BTX	70n	750m	0.0	5.0	.80	2.0△	16m	.45	0	7	CS PROM	PN24ao	ML126
84	MCM7681LDC	1024	8	SE	BTX	70n	750m	0.0	5.0	.80	2.0$	16m	.45	0	7	CS PROM	PN24ao	ML126
85	N82S180F	1024	8	SE	BTX	70n	85ut%	0.0	5.0	.85	2.0△	9.6m	.45	0	7	PROM	B304	ML133
86	N82S180N	1024	8	SE	BTX	70n	875m	0.0	5.0	.85	2.0△	9.6m	.45	0	7	PROM	B304	ML135
87	N82S181F	1024	8	SE	BTX	70n	85ut%	0.0	5.0	.85	2.0$	9.6m	.45	0	7	PROM	B304	ML133
88	N82S181N	1024	8	SE	BTX	70n	875m	0.0	5.0	.85	2.0$	9.6m	.45	0	7	PROM	B304	ML135
89	N82S2708F	1024	8	SE	BTX	70n	85ut%	0.0	5.0	.85	2.0$	9.6m	.45	0	7	PROM	B415	ML187
90	N82S2708N	1024	8	SE	BTX	70n	875m	0.0	5.0	.85	2.0$	9.6m	.45	0	7	PROM	B415	ML135
91	MCM7680LDM	1024	8	SE	BTX	85n	850m	0.0	5.0	.80	2.0△	16m	.45	5	C	CS PROM	PN24ao	ML126
92	MCM7681LDM	1024	8	SE	BTX	85n	850m	0.0	5.0	.80	2.0$	16m	.45	5	C	CS PROM	PN24ao	ML126
93#	RC82S180F	1024	8	SE	BTX	90n	925m	0.0	5.0	.80	2.0△	9.6m	.50	5	C	PROM	B304	ML133
94#	RC82S180N	1024	8	SE	BTX	90n	925m	0.0	5.0	.80	2.0△	9.6m	.50	5	C	PROM	B304	ML135
95#	RC82S181F	1024	8	SE	BTX	90n	925m	0.0	5.0	.80	2.0$	9.6m	.50	5	C	PROM	B304	ML133
96#	RC82S181N	1024	8	SE	BTX	90n	925m	0.0	5.0	.80	2.0$	9.6m	.50	5	C	PROM	B304	ML135
97#	RC82S2708F	1024	8	SE	BTX	90n	925m	0.0	5.0	.80	2.0$	9.6m	.50	5	C	PROM	B415	ML133
98#	RC82S2708N	1024	8	SE	BTX	90n	925m	0.0	5.0	.80	2.0$	9.6m	.50	5	C	PROM	B415	ML135
99	S82S181F	1024	8	SE	BTX	90n	925m	0.0	5.0	.80	2.0$	9.6m	.50	5	C	PROM	B304	ML133
100#	S82S182F	1024	8	SE	BTX	90n	925m	0.0	5.0	.80	2.0△	9.6m	.50	5	C	PROM	B425	ML133
101#	S82S183F	1024	8	SE	BTX	90n	925m	0.0	5.0	.80	2.0$	9.6m	.50	5	C	PROM	B425	ML133
102	S82S2708F	1024	8	SE	BTX	90n	925m	0.0	5.0	.80	2.0$	9.6m	.50	5	C	PROM	B415	ML133
103#	uPB417C	1024	8	SE	BTX	200nØ	700m	.50	7.0	.80	2.0$	3.2m	.45	2	7		B415	ML72g
104#	uPB417D	1024	8	SE	BTX	200nØ	700m	.50	7.0	.80	2.0$	3.2m	.45	2	7		B415	ML30I
105▼	HNVM3008	1024	8	SE	MCX	500n†	5.0m†	0.0	6.5	1.5	3.5	1.6	.40	5	C	EAROM	B475	

SYMBOLS AND CODES EXPLAINED IN INTERPRETER

3. READ ONLY MEMORIES (ROMS)

IN ORDER OF (1)No.WDS(2)No.BITS/WD(3)OP.MODE PRG.CODE(4)STRUCT.(5)MAX ACC.TIME(6)TYPE No.

LINE No.	6 TYPE No.	ORGANIZATION 1 No. WORDS	2 BITS PER WORD	3 OP MODE PROG CODE	4 STRUCTURE CODE	5 MAX ACCESS TIME (s)	MAX OPER. POWER DISS. (W)	RATED POWER SUP. SPAN NEG. (V)	POS. (V)	INPUT LOGIC LEVELS MAX '0' (V)	MIN '1' (V)	MIN OUTPUT SINK CURRENT (A)	@ OUT (V)	OPER. TEMP. RANGE CODE -	+	GENERAL DESCRIPTION	DRAWINGS LOGIC/ BLOCK	OUTLINE
1	TMS2508-25JL	1024	8	SE	MNG	250n	250m†	0.0	5.0	.80	2.0§	2.1m	.45	0	7	EPROM	B225	ML30k
2	MCM27A08C	1024	8	SE	MNG	300n	1.0	5.0	12	.65	3.0§	1.6m	.45	0	7	EPROM	B296a	ML374
3	MCM27A08L	1024	8	SE	MNG	300n	800m	5.0	12	.65	3.0§	1.6m	.45	0	7	EPROM	B288	ML373
4	MCM68A708C	1024	8	SE	MNG	300n	1.0	5.0	12	.80	2.0§	1.6m	.40	0	7	EPROM	B288	ML374
5	MCM68A708L	1024	8	SE	MNG	300n	800m	5.0	12	.80	2.0§	1.6m	.40	0	7	EPROM	B288	ML373
6	TMS2508-30JL	1024	8	SE	MNG	300n	250m†	0.0	5.0	.80	2.0§	2.1m	.45	0	7	EPROM	B225	ML30k
7	D2708-1	1024	8	SE	MNG	350n	800m	5.0	12	.65	3.0§	10uΔ	5.5	0	6	EPROM	B296a	ML359d
8	F2708-1DC	1024	8	SE	MNG	350n	800m	5.0	12	.65	3.0§	1.6m	.45	0	7	EPROM	B288	ML322
9#	M2708-1D1	1024	8	SE	MNG	350n	800m	5.0	12	.65	3.0§	1.6m	.45	0	7	EPROM	B296a	ML303
10	MM2708Q-1	1024	8	SE	MNG	350n	800m	5.0	12	.08	2.0§	1.6m	.40	0	7	EPROM	B288	ML320
11	TMS2708-35JL	1024	8	SE	MNG	350n	800m	5.0	12	.65	2.4§	1.6m	.45	0	7	EPROM	B225	ML30k
12	AM2708DC	1024	8	SE	MNG	450n	426m	5.0	12	.65	2.2§	2.0m	.40	0	7	EPROM	B163	ML☑
13	AM2708DM	1024	8	SE	MNG	450n	426m	5.0	12	.65	2.2§	2.0m	.40	5	C	EPROM	B163	ML☑
14	C2708#	1024	8	SE	MNG	450n	426m	5.0	12	.65	2.2§	2.0m	.40	0	7	EPROM	B163	ML☑
15	D2708	1024	8	SE	MNG	450n	800m	5.0	12	.65	3.0§	10uΔ	5.5	0	6	EPROM	B296a	ML359d
16	D2708L	1024	8	SE	MNG	450n	425m	5.0	12	.65	2.2§	10uΔ	5.5	0	6	EPROM	B296a	ML359d
17	EA2708DC	1024	8	SE	MNG	450n	630m	5.0	12	.80	2.0§	1.6m	.45	0	7	EPROM	B256a	ML207f
18	F2708DC	1024	8	SE	MNG	450n	800m	5.0	12	.65	3.0§	1.6m	.45	0	7	EPROM	B288	ML322
19	F2708DL	1024	8	SE	MNG	450n	800m	5.0	12	.65	3.0§	1.6m	.45	5	8	EPROM	B288	ML322
20	F2708DM	1024	8	SE	MNG	450n	800m	5.0	12	.65	3.0§	1.6m	.45	5	C	EPROM	B288	ML322
21	ID2708	1024	8	SE	MNG	450n	800m	5.0	12	.65	3.0§	10uΔ	5.25	4	8	EPROM	B296a	ML359d
22#	M5L2708S	1024	8	SE	MNG	450n	800m	5.0	12	.65	3.0	1.6m	.45	0	7	EPROM	B296a	ML340
23#	M2708D1	1024	8	SE	MNG	450n	800m	5.0	12	.65	3.0§	1.6m	.45	0	7	EPROM	B296a	ML303
24	MCM2708C	1024	8	SE	MNG	450n	1.0	5.0	12	.65	3.0§	1.6m	.45	0	7	EPROM	B296a	ML374
25	MCM2708L	1024	8	SE	MNG	450n	1.0	5.0	12	.65	3.0§	1.6m	.45	0	7	EPROM	B296a	ML373
26	MCM68708C	1024	8	SE	MNG	450n	1.0	5.0	12	.80	2.0§	1.6m	.40	0	7	EPROM	B288	ML374
27	MCM68708L	1024	8	SE	MNG	450n	1.0	5.0	12	.80	2.0§	1.6m	.40	0	7	EPROM	B288	ML373
28	MD2708	1024	8	SE	MNG	450n	800m	5.0	12	.65	3.0§	10uΔ	5.5	5	9	EPROM	B296a	ML359d
29	MM2708Q	1024	8	SE	MNG	450n	800m	5.0	12	.65	3.0§	1.6m	.45	0	7	EPROM	B277	ML200
30	MM2758Q-A	1024	8	SE	MNG	450n	525m	0.0	5.0	.80	2.0§	1.0uΔ	5.25	0	7	EPROM	B297	ML☑
31	MM2758Q-B	1024	8	SE	MNG	450n	525m	0.0	5.0	.80	2.0§	1.0uΔ	5.25	0	7	EPROM	B297	ML☑
32#	SFF71708J	1024	8	SE	MNG	450n	800m	0.0	5.0	0.65	3.0§	1.6m	0.45	0	7	CS;PROM	B288	ML322
33#	SFF71708K	1024	8	SE	MNG	450n	800m	0.0	5.0	0.65	3.0§	1.6m	0.45	0	7	CS;PROM	B288	ML322
34	SMJ2708JM	1024	8	SE	MNG	450n	500m	5.0	12	.65	2.4§	1.6m	.45	5	C	EPROM	B225	ML207
35	TMS27L08JL	1024	8	SE	MNG	450n	580m	5.0	12	.65	2.2§	1.6m	.40	0	7	EPROM	B225	ML72b
36	TMS2708JL	1024	8	SE	MNG	450n	800m	5.0	12	.65	2.4§	1.6m	.45	0	7	Erasable PROM	B225	ML30k
37	TMS2758JL0	1024	8	SE	MNG	450n	285mt	0.0	5.0		§			0	7	EPROM	PN24je	ML400
38	TMS2758JL1	1024	8	SE	MNG	450n	285mt	0.0	5.0		§			0	7	EPROM	PN24je	ML400
39	EA2708DL	1024	8	SE	MNG	500n	630m	5.0	12	.80	2.0§	1.6m	.45	5	9	EPROM	B256a	ML207f
40#	MSM3758AS	1024	8	SE	MNG	500nt	800mt	0.0	20	.65	3.0	1.6m	.45	0	7	EPROM		ML☑
41	D2708-6	1024	8	SE	MNG	550n	800m	5.0	12	.65	3.0§	10uΔ	5.5	0	6	EPROM	B296a	ML359d
42	EA2708DM	1024	8	SE	MNG	550n	630m	5.0	12	.80	2.0§	1.6m	.45	5	C	EPROM	B256a	ML207f
43#	M5L2708S-65	1024	8	SE	MNG	650n	800m	5.0	12	.65	3.0	1.6m	.45	0	7	EPROM	B296a	ML340
44#	M2708-4D1	1024	8	SE	MNG	700n	800m	5.0	12	.65	3.0§	1.6m	.45	0	7	EPROM	B296a	ML303
45#	uPD458D	1024	8	SE	MNX	450n	760mt	0.0	12	.70	3.0§	1.7m	.50	1	7		B418	ML238
46#	MSM3758A	1024	8	SE	MXX	500n	1.0	5.0	12	.65	3.0§	1.6m	.45	0	7	EPROM	PN24am	ML207a
47#	HN46830	1024	8	SS	MNG	500n	350mt	0.0	5.0	.80	2.0§	10uΔ	2.4	2	7	CSROM	B187	ML287
48#	HN46830P	1024	8	SS	MNG	500n	350mt	0.0	5.0	.80	2.0§	10uΔ	2.4	2	7	CSROM	B187	ML288
49	KM8656	1024	8	SS	MPA	800n	440m	3	12							out:3state TTL		
50▼	6260-1J24	1024	9	SE	BTD	100n	825m	0.0	7.0	.80	2.0Δ	6.0m	.50	0	7	ROM	PN24ej	ML276
51▼	6261-1J24	1024	9	SE	BTD	100n	875m	0.0	7.0	.80	2.0§	6.0m	.50	0	7	ROM	PN24ej	ML276
52▼	5260-1J24	1024	9	SE	BTD	150n	825m	0.0	7.0	.80	2.0Δ	6.0m	.50	5	C	ROM	PN24ej	ML276
53▼	5261-1J24	1024	9	SE	BTD	150n	875m	0.0	7.0	.80	2.0§	6.0m	.50	5	C	ROM	PN24ej	ML276
54	6255-1F	1024	10	SC	BTD	100n	825m	0.0	5.0	.80	2.0Δ	6.0m	.50	0	7	ROM	B343	FL50
55▼	6255-1J24	1024	10	SE	BTD	100n	825m	0.0	7.0	.80	2.0Δ	6.0m	.50	0	7	ROM	PN24eg	ML276
56▼	6256-1J24	1024	10	SE	BTD	100n	875m	0.0	7.0	.80	2.0§	6.0m	.50	0	7	ROM	PN24eg	ML276
57▼	5255-1J24	1024	10	SE	BTD	150n	825m	0.0	7.0	.80	2.0Δ	6.0m	.50	5	C	ROM	PN24eg	ML276
58▼	5256-1J24	1024	10	SE	BTD	150n	875m	0.0	7.0	.80	2.0§	6.0m	.50	5	C	ROM	PN24eg	ML276
59	IM6312ACDN	1024	12	S	MCG	250n	525m	0.0	10.5	2.1	7.35	1.0uΔ		0	7	CS	B463	ML397
60	IM6312AIJN	1024	12	S	MCG	250n	525m	0.0	10.5	2.1	7.35	1.0uΔ		4	8	CS	B463	ML398
61	IM6312IFN	1024	12	S	MCG	250n	525m	0.0	10.5	2.1	7.35	1.0uΔ		4	8	CS	B463	FL77
62	IM6312AMDN	1024	12	S	MCG	300n	525m	0.0	10.5	2.1	7.35	1.0uΔ		5	C	CS	B463	ML397
63	IM6312MFN	1024	12	S	MCG	300n	525m	0.0	10.5	2.1	7.35	1.0uΔ		5	C	CS	B463	FL77
64	IM6312AIDN	1024	12	S	MCG	510n	5.0ut♦	0.0	10	2.0	7.0	1.0uΔ		4	8	CS ROM	B463	ML134f
65	IM6312CDN	1024	12	S	MCG	640n	4.0m	0.0	5.0	.80	3.5	5.0uΔ		0	7	CS	B463	ML397
66	IM6312CFN	1024	12	S	MCG	640n	4.0m	0.0	5.0	.80	3.5	5.0uΔ		0	7	CS	B463	FL77
67	IM6312CJN	1024	12	S	MCG	640n	4.0m	0.0	5.0	.80	3.5	5.0uΔ		0	7	CS	B463	ML398
68	IM6312IDN	1024	12	S	MCG	640n	4.0m	0.0	5.0	.80	3.5	5.0uΔ		4	8	CS	B463	ML397
69	IM6312IJN	1024	12	S	MCG	640n	4.0m	0.0	5.0	.80	3.5	5.0uΔ		4	8	CS	B463	ML398
70	IM6312MDN	1024	12	S	MCG	640n	5.0ut♦	0.0	5.0	1.0	3.5	5.0uΔ		5	C	CSROM	B463	ML134f
71	IM6312MJN	1024	12	S	MCG	640n	4.0m	0.0	5.0	.80	3.5	5.0uΔ		5	C	CS	B463	ML398
72	HM6322A2	1024	12	SC	MCG	240n	100m	0.0	10	2.0	7.0§			5	C			
73	HM6322A9	1024	12	SC	MCG	240n	100m	0.0	10	2.0	7.0§			4	8			
74	HM6322C9	1024	12	SC	MCG	250n	25m	0.0	5.0	.80	3.0§			4	8			
75	HM6322-2	1024	12	SC	MCG	300n	25m	0.0	5.0	.80	3.0§			5	C			
76	HM6322-9	1024	12	SC	MCG	300n	25m	0.0	5.0	.80	3.0§			4	8			
77	UA2548#4	2048	1	SC	MXX	900n	600m	20	0.0	.80♦	2.7	1.6m	.40	5	C		B9a	ML31a
78	UA3548#4	2048	1	SC	MXX	900n	600m	20	0.0	.80♦	2.7	1.6m	.40	2	7		B9a	ML31a
79	HRM2048#1	2048§	1§	SE	TAX	500n	640m♦	0.0	5.0	2.0	.80			0	7	PR Non-Vol RMM	B91	ML113
80	UC6548#1	2048§	1	SS	MXX	1.0u	750m	15	5.0	.60	2.6			5	C		B9e	ML31a
81	UC7548#1	2048§	1	SS	MXX	1.0u	750m	15	5.0	.60	2.6			0	7		B9e	ML31a
82	29651ADC	2048	4	S		50n	850m	0.0	5.0	.50	2.4§	16m	.50	0	7	PROM	B213	ML194f
83	29653ADC	2048	4	S		55n	225m	0.0	5.0	.50	2.4§	16m	.50	0	7	PROM; Pwr Sw	B213	ML194f
84	29651ADM	2048	4	S		60n	850m	0.0	5.0	.50	2.4§	16m	.50	5	C	PROM	B213	ML194f
85	29653ADM	2048	4	S		65n	225m	0.0	5.0	.50	2.4§	16m	.50	5	C	PROM; Pwr Sw	B213	ML914f
86	TBP24S81J	2048	4	S	BTD	70n	625mt	0.0	5.0	.80	2.0§	16m#		0	7	PROM	AN18ca	ML☑
87	TBP24S81N	2048	4	S	BTD	70n	625mt	0.0	5.0	.80	2.0§	16m#		0	7	PROM	AN18ca	ML☑
88▼	TBP24SA81J	2048	4	S	BTD	70n	625mt	0.0	5.0	.80	2.0Δ	16m#		0	7	PROM	PN18ca	ML☑
89▼	TBP24SA81N	2048	4	S	BTD	70n	625mt	0.0	5.0	.80	2.0Δ	16m#		0	7	PROM		ML☑
90	N82S185F#	2048	4	SC	BTD	100n	50u%	0.0	5.0	.85	2.0§	40uΔ	5.5	0	7	PROM	B213a	ML☑
91	N82S185N#	2048	4	SC	BTD	100n	50u%	0.0	5.0	.85	2.0§	40uΔ	5.5	0	7	PROM	B213a	ML☑
92	N82S184F	2048	4	SC	BTX	100n	835m☑	0.0	5.5	.80	2.4			0	7	Fld Prog	B213	ML226
93	N82S185F	2048	4	SC	BTX	100n	835m☑	0.0	5.5	.80	2.4			0	7	Fld Prog	B213	ML226
94	NC6560L#2	2048§	4	SC	MNA	350n	925m	3.0	12	.80	3.0§	1.6m	.40	0	7		B121a	ML30g
95	MCM6560L#2	2048	4	SC	MNX	350n	1.0	3.0	12	.80	4.0§	1.6m	.40	0	7		B121a	ML150
96	MCM6560P#2	2048	4	SC	MNX	350n	1.0	3.0	12	.80	4.0§	1.6m	.40	0	7		B121a	ML39
97▼	NCM6560BL	2048	4	SC	MNX	350n	600mt	3.0	12	.80	3.0§	1.6m	.40	0	7		B121a	ML434
98▼	NCM6560BP	2048	4	SC	MNX	350n	600mt	3.0	12	.80	3.0§	1.6m	.40	0	7		B121a	ML434
99▼	AM27S184DC	2048	4	SE	BTD			0.0	5.0	.80	2.0Δ	16m	.50	0	7	PROM	PN18bx	ML304
100▼	AM27S184DM	2048	4	SE	BTD			0.0	5.0	.80	2.0Δ	16m	.50	5	C	PROM	PN18bx	ML304
101▼	AM27S185DC	2048	4	SE	BTD			0.0	5.0	.80	2.0§	16m	.50	0	7	PROM	PN18bx	ML304
102	SN74S454J	2048	4	SE	BTD	45nt	625m	0.0	5.0	.80	2.0§	16m	.50	0	7	PROM	PN18ba	ML3b
103	SN74S454N	2048	4	SE	BTD	45nt	625m	0.0	5.0	.80	2.0§	16m	.50	0	7	PROM	PN18ba	ML3k
104	SN74S455J	2048	4	SE	BTD	45nt	625m	0.0	5.0	.80	2.0Δ	16m	.50	0	7	PROM	PN18ba	ML3b
105▼	MB7128E	2048	4	SE	BTD	55n	755m	0.0	5.0	0.8	2.0§	40uΔ		0	7	Schott PROM	PN18av	ML347
106▼	MB7132E	2048	4	SE	BTD	55n	875m	0.0	5.0	0.8	2.0§	40uΔ		0	7	Schott PROM	PN24je	ML193
107▼	29651AFM	2048	4	SE	BTD	60n	1.2 ☑	0.5#	7.0#	0.8	2.0§	100u	4.5	5	C	CS;PROM;Pwr Sw	B397	FL81

SYMBOLS AND CODES EXPLAINED IN INTERPRETER

3. READ ONLY MEMORIES (ROMS)

IN ORDER OF (1)No.WDS(2)No.BITS/WD(3)OP.MODE PRG.CODE(4)STRUCT.(5)MAX ACC.TIME(6)TYPE No.

LINE No.	6 TYPE No.	ORGANIZATION 1 No. WORDS	2 BITS PER WORD	3 OP MODE PROG CODE	4 STRUCTURE CODE	5 MAX ACCESS TIME (s)	MAX OPER. POWER DISS. (W)	RATED POWER SUP. SPAN NEG. (V)	POS. (V)	INPUT LOGIC LEVELS MAX '0' (V)	MIN '1' (V)	MIN OUTPUT SINK CURRENT (A)	@ OUT (V)	OPER. TEMP. RANGE CODE -	+	GENERAL DESCRIPTION	DRAWINGS LOGIC/ BLOCK	OUTLINE
1	DM87S184J	2048	4	SE	BTD	60n	700m	0.0	5.0	.80	2.0△	16m	.45	0	7	PROM	B436	ML194e
2	DM87S184N	2048	4	SE	BTD	60n	700m	0.0	5.0	.80	2.0△	16m	.45	0	7	PROM	B436	ML204a
3	DM87S185J	2048	4	SE	BTD	60n	700m	0.0	5.0	.80	2.0§	16m	.45	0	7	PROM	B436	ML194e
4	DM87S185N	2048	4	SE	BTD	60n	700m	0.0	5.0	.80	2.0§	16m	.45	0	7	PROM	B436	ML204a
5#	HN25084	2048	4	SE	BTD	60n		0.0	5.0	.80	2.0			0	7	PROM	B372	ML165c
6#	HN25085	2048	4	SE	BTD	60n		0.0	5.0	.80	2.0			0	7	PROM	B372	ML165c
7▼	29653AFM	2048	4	SE	BTD	65n	1.2 ☑	0.5#	7.0#	0.8	2.0§	100u	4.5	5	C	CS;PROM;Pwr Sw	B397	FL81
8	29651DC	2048	4	SE	BTD	75n	850mØ	0.0	5.0	.80	2.0§	16m	.50	0	7	PROM	B397	ML☑
9	DM77S184J	2048	4	SE	BTD	75n	700m	0.0	5.0	.80	2.0△	16m	.50	5	C	PROM	B436	ML194e
10	DM77S185J	2048	4	SE	BTD	75n	700m	0.0	5.0	.80	2.0§	16m	.50	5	C	PROM	B436	ML194e
11	29653DC	2048	4	SE	BTD	80n	850mØ	0.0	5.0	.80	2.0§	16m	.50	0	7	PROM;Pwr Sw	B397	ML☑
12▼	29651FM	2048	4	SE	BTD	90n	1.2 ☑	0.5#	7.0#	0.8	2.0§	100u	4.5	5	C	CS;PROM;Pwr Sw	B397	FL81
13▼	29653FM	2048	4	SE	BTD	90n	1.2 ☑	0.5#	7.0#	0.8	2.0§	100u	4.5	5	C	CS;PROM;Pwr Sw	B397	FL81
14	29651DM	2048	4	SE	BTD	95n	850mØ	0.0	5.0	.80	2.0§	16m	.50	5	C	PROM	B397	ML☑
15	29653DM	2048	4	SE	BTD	100n	850mØ	0.0	5.0	.80	2.0§	16m	.50	5	C	PROM;Pwr Sw	B397	ML☑
16	N82S184I	2048	4	SE	BTD	100n	600m	0.0	5.0	.85	2.0△	16m	.45	0	7	PROM	B372	ML134j
17	JANM38510/20901BVB	2048	4	SE	BTD	125n$	850m	0.0	5.0	.80	2.0△	12m	.50	5	C	PROM	B360	ML255
18	JANM38510/20901CVB	2048	4	SE	BTD	125n$	850m	0.0	5.0	.80	2.0△	12m	.50	5	C	PROM	B360	ML255
19	JANM38510/20902BVB	2048	4	SE	BTD	125n$	850m	0.0	5.0	.80	2.0§	12m	.50	5	C	PROM	B360	ML255
20	JANM38510/20902CVB	2048	4	SE	BTD	125n$	850m	0.0	5.0	.80	2.0§	12m	.50	5	C	PROM	B360	ML255
21	S82S185I	2048	4	SE	BTD	125n	650m	0.0	5.0	.80	2.0§	16m	.50	5	C	PROM	B372	ML134j
22#	RC82S184F	2048	4	SE	BTX	150m	835m☑	0.0	5.2	.80	2.4			5	C	Fld Prog	B213	ML226
23#	RC82S185F	2048	4	SE	BTX	150m	835m☑	0.0	5.2	.80	2.4			5	C	Fld Prog	B213	ML226
24	NC7810	2048	4	SE	MXN	1.4u	480m	30	5.0	.60	3.5§			0	7	EAROM	B408	ML☑
25▼	AM27S185DM	2048	4	SE	STD			0.0	5.0	.80	2.0§	16m	.50	5	C	PROM	PN18bx	ML304
26#	M5L2716K	2048	8			450n	525m	0.0	5.0	.80	2.0	2.1m	.45	0	7			
27#	M5L2716K-65	2048	8			650n	525m	0.0	5.0	.80	2.0	2.1m	.45	0	7			
28#	RC82S290N	2048	8		BTX	80n	900m	0.0	5.0	.80	2.0△	9.6m	.50	5	C	ROM	B306	ML135
29#	RC82S291N	2048	8		BTX	80n	900m	0.0	5.0	.80	2.0§	9.6m	.50	5	C	ROM	B306	ML135
30#	RC82S290F	2048	8		BTX	100n	900m	0.0	5.0	.80	2.0△	9.6m	.50	5	C	ROM	B306	ML133
31#	RC82S291F	2048	8		BTX	100n	900m	0.0	5.0	.80	2.0§	9.6m	.50	5	C	ROM	B306	ML133
32	TMM323D-1	2048	8		MNG	350n	550m	0.0	5.0	0.8	2.0	2.1m	0.45	0	7			ML403
33♦	TMM323D	2048	8		MNG	450n	525m	0.0	5.0	0.8	2.0	2.1m	0.45	0	7		B481	ML403
34♦	TMM334P	2048	8		MNG	450n	440m	0.0	5.0	0.8	2.0	2.1m	0.4	0	7		B477	ML118e
35	NMC2724Q-A	2048	8		MXG	450n	150m	0.0	5.0	.80	2.0§			0	7	EPROM	B297	ML☑
36	NMC2724Q-B	2048	8		MXG	450n	150m	0.0	5.0	.80	2.0§			0	7	EPROM	B297	ML☑
37♦	29681AFM	2048	8	S		70n	900m	0.0	5.0	.50	2.4§	16m	.50	5	C	PROM	B305	FL78
38♦	29683AFM	2048	8	S		70n	225m	0.0	5.0	.50	2.4§	16m	.50	5	C	PROM; Pwr Sw	B305	FL78
39♦	29681FM	2048	8	S		100n	900m	0.0	5.0	.50	2.4§	16m	.50	5	C	PROM	B305	FL78
40	29683FM	2048	8	S		105n	225m	0.0	5.0	.50	2.4§	16m	.50	5	C	PROM; Pwr Sw	B305	FL☑
41	ID8355	2048	8	S		400n	1.5 ☑	0.0	5.0	0.8	2.0	10u△		4	8		B467	
42	TBP28R166J	2048	8	S	BTD	20n†	550m†	0.0	5.0	.80	2.0§	16m†		0	7	PROM	PN24jc	ML☑
43	TBP28R166N	2048	8	S	BTD	20n†	550m†	0.0	5.0	.80	2.0§	16m†		0	7	PROM	PN24jc	ML☑
44	TBP28P166J	2048	8	S	BTD	35n†	500m	0.0	5.0	.80		16m#		0	7	PROM Pwr Sw	PN24jb	ML☑
45	TBP28P166N	2048	8	S	BTD	35n†	500m	0.0	5.0	.80		16m#		0	7	PROM Pwr Sw	PN24jb	ML☑
46	TBP28S166J	2048	8	S	BTD	35n†	500m†	0.0	5.0	.80	2.0§	16m#		0	7	PROM	PN24ja	ML☑
47	TBP28S166N	2048	8	S	BTD	35n†	500m†	0.0	5.0	.80	2.0§	16m#		0	7	PROM	PN24ja	ML☑
48	TBP28L166J	2048	8	S	BTD	65n†	250m†	0.0	5.0	8.0	2.0§	8.0m#		0	7	PROM	PN24ja	ML☑
49	TBP28L166N	2048	8	S	BTD	65n†	250m†	0.0	5.0	8.0	2.0§	8.0m#		0	7	PROM	PN24ja	ML☑
50	CM1600C	2048	8	S	MCX	450n	120m	0.0	5.0	.65	2.0	2.1m	.40	0	7			
51	CM1600P	2048	8	S	MCX	450n	120m	0.0	5.0	.65	2.0	2.1m	.40	0	7			
52	CM1600-2C	2048	8	S	MCX	800n	120m	0.0	5.0	.65	2.0	2.1m	.40	0	7			
53	CM1600-2P	2048	8	S	MCX	800n	120m	0.0	5.0	.65	2.0	2.1m	.40	0	7			
54	CM1600-3C	2048	8	S	MCX	1.5u	120m	0.0	5.0	.65	2.0	2.1m	.40	0	7			
55	CM1600-3P	2048	8	S	MCX	1.5u	120m	0.0	5.0	.65	2.0	2.1m	.40	0	7			
56	MCM27A16C	2048	8	S	MNG	350n	500m	0.0	5.0	.80	2.0	10u△	5.2	1	7	UV Erase PROM	B297	ML374
57	MCM27A16L	2048	8	S	MNG	350n	500m	0.0	5.0	.80	2.0	10u△	5.2	1	7	UV Erase PROM	B297	ML373
58	EA2716	2048	8	S	MNX	450n	525m	0.0	5.0	0.8	2.2	2.1m		1	7	EPROM	B432	ML193
59	MBC6831B	2048	8	S	MNX	450n	440m	4.55	5.5	0.8	2.0	2.1m	0.4	5	C			
60	R2316BC	2048	8	S	MTX	450n	325m	0.0	5.0	0.8	2.0§	10u△	5.5	0	7	CS OR-tied	B182a	ML381
61	R2316BP	2048	8	S	MTX	450n	325m	0.0	5.0	0.8	2.0§	10u△	5.5	0	7	CS OR-tied	B182a	ML380
62	R2316EC	2048	8	S	MTX	450n	325m	0.0	5.0	0.8	2.0§	10u△	5.5	0	7	CS OR-tied	B182a	ML381
63	R2316EP	2048	8	S	MTX	450n	325m	0.0	5.0	0.8	2.0§	10u△	5.5	0	7	CS OR-tied	B182a	ML380
64	R2316BCE	2048	8	S	MTX	475n	375m	0.0	5.0	0.8	2.0§	10u△	5.5	4	8	CS OR-tied	B182a	ML381
65	R2316BPE	2048	8	S	MTX	475n	375m	0.0	5.0	0.8	2.0§	10u△	5.5	4	8	CS OR-tied	B182a	ML380
66	R2316ECE	2048	8	S	MTX	475n	375m	0.0	5.0	0.8	2.0§	10u△	5.5	4	8	CS OR-tied	B182a	ML381
67	R2316EPE	2048	8	S	MTX	475n	375m	0.0	5.0	0.8	2.0§	10u△	5.5	4	8	CS OR-tied	B182a	ML380
68	R2316BMT	2048	8	S	MTX	550n	400m	0.0	5.0	0.8	2.0§	10u△	5.5	5	C	CS OR-tied	B182a	ML381
69	R2316EMT	2048	8	S	MTX	550n	400m	0.0	5.0	0.8	2.0§	10u△	5.5	5	C	CS OR-tied	B182a	ML381
70	SYC2316B-3	2048	8	SC		300n	1.0 ☑	0.0	5.0	.80	2.0§	2.1m	.40	0	7	ROM	B182a	ML256
71	SYP2316B-3	2048	8	SC		300n	1.0 ☑	0.0	5.0	.80	2.0§	2.1m	.40	0	7	ROM	B182a	ML118f
72	SYC2316B	2048	8	SC		450n	1.0 ☑	0.0	5.0	.80	2.0§	2.1m	.40	0	7	PROM	B182a	ML256
73	SYP2316B	2048	8	SC		450n	1.0 ☑	0.0	5.0	.80	2.0§	2.1m	.40	0	7	PROM	B182a	ML118f
74	SYC2316A	2048	8	SC		550n	1.0 ☑	0.0	5.0	.80	2.0§	2.1m	.40	0	7	PROM	B182	ML256
75	SYP2316A	2048	8	SC		550n	1.0 ☑	0.0	5.0	.80	2.0§	2.1m	.40	0	7	PROM	B182	ML118f
76#	MSM3780	2048	8	SC		1.0u	500m	0.0	5.0	.65	2.2§	1.6m	.45	0	7	PROM	B78b	ML256
77	N82S191N	2048	8	SC	BTX	80n	875m	0.0	5.0	.85	2.0§	9.6m	.45	0	7	PROM	B305	ML135
78	N82S290F	2048	8	SC	BTX	80n	40ut%	0.0	5.0	.85	2.0△	9.6m	.45	0	7	ROM	B306	ML133
79	N82S290N	2048	8	SC	BTX	80n	850m	0.0	5.0	.85	2.0△	9.6m	.45	0	7	ROM	B306	ML135
80	N82S291F	2048	8	SC	BTX	80n	40ut%	0.0	5.0	.85	2.0§	9.6m	.45	0	7	ROM	B306	ML133
81	N82S291N	2048	8	SC	BTX	80n	850m	0.0	5.0	.85	2.0§	9.6m	.45	0	7	ROM	B306	ML135
82	S82S290N	2048	8	SC	BTX	80n	900m	0.0	5.0	.80	2.0△	9.6m	.50	5	C	ROM	B306	ML135
83	SYC3316	2048	8	SC	BTX	80n	1.0	0.0	5.0	.80	2.0§	10u△	5.0	0	7	PROM	B182c	ML256
84	SYD3316	2048	8	SC	BTX	80n	1.0	0.0	5.0	.80	2.0§	10u△	5.0	0	7	PROM	B182c	ML183b
85#	RC82S191N	2048	8	SC	BTX	100n	925m	0.0	5.0	.85	2.0§	9.6m	.50	5	C	PROM	B305	ML135
86	S82S290F	2048	8	SC	BTX	100n	900m	0.0	5.0	.80	2.0△	9.6m	.50	5	C	ROM	B306	ML133
87	S82S291F	2048	8	SC	BTX	100n	900m	0.0	5.0	.80	2.0§	9.6m	.50	5	C	ROM	B306	ML133
88	SCM5316	2048	8	SC	MCG		500m	0.0	5.0	.40	.40	1.0u△		5	C	PR	B460	ML☑
89	MD23SC16AE	2048	8	SC	MCX	300n		0.0	5.0	.80	2.0§	10u△		0	7		PN24p	ML216
90▼	HCMP1835D#	2048	8	SC	MCX	400n†	60m†	0.0	12	3.0	7.0	1.6	.40	5	C	ROM	B473	
91▼	HCMP1835P	2048	8	SC	MCX	400n†	60m†	0.0	12	3.0	7.0	1.6	.40	4	8	ROM	B473	
92▼	HCMP1836D	2048	8	SC	MCX	400n†	60m†	0.0	12	3.0	7.0	1.6	.40	5	C	ROM	B474	
93▼	HCMP1836P	2048	8	SC	MCX	400n†	60m†	0.0	12	3.0	7.0	1.6	.40	4	8	ROM	B474	
94▼	HCMP1835CD	2048	8	SC	MCX	800n†	20m†	0.0	6.5	1.5	3.5	1.6	.40	5	C	ROM	B473	
95▼	HCMP1835CP	2048	8	SC	MCX	800n†	20m†	0.0	6.5	1.5	3.5	1.6	.40	4	8	ROM	B473	
96▼	HCMP1836CD	2048	8	SC	MCX	800n†	20m†	0.0	6.5	1.5	3.5	1.6	.40	5	C	ROM	B474	
97▼	HCMP1836CP	2048	8	SC	MCX	800n†	20m†	0.0	6.5	1.5	3.5	1.6	.40	4	8	ROM	B474	
98	HCMP1835D	2048	8	SC	MCX	850n	30m	0.0	5.0	1.6	3.4			5	C			
99	NC6590L	2048$	8	SC	MNA	800n	405m	5.0	12	.80	3.0§	1.6m	.40	0	7		B144	ML30g
100	AM9216CDC	2048	8	SC	MNG	300n	1.0 ☑	0.0	12	.80	2.4§	3.2m	.40	0	7		B442	ML207p
101	uPD8355C	2048	8	SC	MNG	320n△	1.5 ☑	0.0	5.0	.80	2.0§	10u△	.45	0	7	PROM	D467a	
102	MCM68A316AC	2048	8	SC	MNG	350n	650m	0.0	5.0	.80	2.0§	1.6m	.40	0	7		B291	ML319
103	MCM68A316AP	2048	8	SC	MNG	350n	650m	0.0	5.0	.80	2.0§	1.6m	.40	0	7		B291	ML39
104	MCM68A316EC	2048	8	SC	MNG	350n	650m	0.0	5.0	.80	2.0§	1.6m	.40	0	7		B291a	ML319
105	MCM68A316EP	2048	8	SC	MNG	350n	650m	0.0	5.0	.80	2.0§	1.6m	.40	0	7		B291a	ML39
106	MK34000N-3	2048	8	SC	MNG	350n	330m	0.0	5.0	.80	2.0§	3.3m	.40	0	7		B263	ML30h

SYMBOLS AND CODES EXPLAINED IN INTERPRETER

3. READ ONLY MEMORIES (ROMS)

IN ORDER OF (1)No.WDS(2)No.BITS/WD(3)OP.MODE PRG.CODE(4)STRUCT.(5)MAX ACC.TIME(6)TYPE No.

LINE No.	6 TYPE No.	ORGANIZATION 1 No. WORDS	2 BITS PER WORD	3 OP MODE PROG CODE	4 STRUCTURE CODE	5 MAX ACCESS TIME (s)	MAX OPER. POWER DISS. (W)	RATED POWER SUP. SPAN NEG. (V)	POS. (V)	INPUT LOGIC LEVELS MAX '0' (V)	MIN '1' (V)	MIN OUTPUT SINK CURRENT (A)	@ OUT (V)	OPER. TEMP. RANGE CODE -	+	GENERAL DESCRIPTION	DRAWINGS LOGIC/ BLOCK	OUTLINE
1	MK34000P-3	2048	8	SC	MNG	350n	330m	0.0	5.0	.80	2.0§	3.3m	.40	0	7		B263	ML191
2	AM9216BDC	2048	8	SC	MNG	400n	1.0 ☑	0.0	12	.80	2.4§	3.2m	.40	0	7		B442	ML207p
3	AM9216BDM	2048	8	SC	MNG	400n	1.0 ☑	0.0	12	.80	2.6§	3.2m	.40	5	C		B442	ML207p
4	AM9217BDC	2048	8	SC	MNG	450n	1.0 ☑	0.0	5.0	.80	2.0§	3.2m	.40	0	7		B442a	ML207p
5	AM9217BDM	2048	8	SC	MNG	450n	1.0 ☑	0.0	5.0	.80	2.0§	3.2m	.45	5	C		B442a	ML207p
6#	M2316E-D1	2048	8	SC	MNG	450n	600m	0.0	5.0	.80	2.4§	2.1m	.40	0	7		B78c	ML303
7	MM2316ED	2048	8	SC	MNG	450n	500m	0.0	5.0	.80	2.0§	3.2m	.40	0	7	ROM	B432	ML184a
8	MM2316EN	2048	8	SC	MNG	450n	490m	0.0	5.0	.80	2.0§	2.0m	.45	0	7	ROM	B182a	ML183
9	MM52116D	2048	8	SC	MNG	450n	500m	0.0	5.0	.80	2.0§	3.2m	.40	0	7	ROM	B432	ML184a
10	MM52116N	2048	8	SC	MNG	450n	500m	0.0	5.0	.80	2.0§	3.2m	.40	0	7	ROM	B432	ML72f
11	S6831B	2048	8	SC	MNG	450n	400m	0.0	5.0	.80	2.0§	2.1m	.40	0	7	ROM	A462a	ML34g
12	uPD2716	2048	8	SC	MNG	450n		0.0	5.0							EPROM	PN24id	
13	MCM65317L	2048	8	SC	MNG	500n	527m	5.0	12	0.8	3.0§			0	6		B453	ML256
14	MCM65317P	2048	8	SC	MNG	500n	527m	5.0	12	0.8	3.0§			0	6		B453	ML133
15	MCM68316EL	2048	8	SC	MNG	500n	650m	0.0	5.0	0.8	2.0§			0	6		B291a	ML256
16	MCM68316EP	2048	8	SC	MNG	500n	650m	0.0	5.0	0.8	2.0§			0	6		B291a	ML133
17	AM9217ADC	2048	8	SC	MNG	550n	1.0 ☑	0.0	5.0	.80	2.0§	3.2m	.40	0	7		B442a	ML207p
18	AM9217ADM	2048	8	SC	MNG	550n	1.0 ☑	0.0	5.0	.80	2.0§	3.2m	.45	5	C		B442a	ML207p
19	C8316A	2048	8	SC	MNG	550n	1.0 ☑	0.0	5.0	.80	2.0§	2.0m	.45	0	7		B442a	ML207p
20#	MSM3781AS	2048	8	SC	MNG	550n†	350m†	0.0	7.0	.65	2.2	1.6m	.45	0	7	EPROM		
21	RO3-9316C	2048	8	SC	MNI	350n	450m	0.0	5.0	.80	2.0§	1.6m	.40	0	7		B182a	ML324
22	RO3-8316B	2048	8	SC	MNI	450n	450m	0.0	5.0	.80	2.0§	1.6m	.40	0	7		B182	ML324
23	RO3-9316B	2048	8	SC	MNI	450n	450m	0.0	5.0	.80	2.0§	1.6m	.40	0	7		B182a	ML324
24	RO3-8316A	2048	8	SC	MNI	850n	325m	0.0	5.0	.65	2.2	1.6m	.45	0	7		B182	ML324
25	RO3-9316A	2048	8	SC	MNI	850n	325m	0.0	5.0	.80	2.0§	1.6m	.40	0	7		B182a	ML324
26	EA8316EDC	2048	8	SC	MNX	450n	525m	0.0	5.0	.80	2.0§	2.1m	.40	0	7		B258	ML184b
27#	uPD2316EC	2048	8	SC	MNX	450n	600m	0.0	5.0	.80	2.4§	2.1m	.40	1	7		B258	ML369
28	uPD2316EC#	2048	8	SC	MNX	450n		0.0	5.0	.80	2.0§	10u△	5.0	1	7	PROM	B258	ML118f
29#	uPD2316ED	2048	8	SC	MNX	450n	600m	0.0	5.0	.80	2.4§	2.1m	.40	1	7		B258	ML72g
30	uPD2316ED#	2048	8	SC	MNX	450n		0.0	5.0	.80	2.0§	10u△	5.0	1	7	PROM	B258	ML381
31	EA8316EDL	2048	8	SC	MNX	525n	700m	0.0	5.0	.80	2.2§	2.1m	.45	5	9		B258	ML184b
32	MCM6832C	2048	8	SC	MNX	550n	527m	5.0	12	.80	3.0§	1.6m	.40	0	7	CS ROM	B144	ML126
33	MCM6832P	2048	8	SC	MNX	550n	527m	5.0	12	.80	3.0§	1.6m	.40	0	7	CS ROM	B144	ML39
34	EA2316ADC	2048	8	SC	MNX	600n	1.0	0.0	5.0	2.2	0.8§	100u△	.45	0	7	CS;OR-Tie	B182	ML133e
35	EA2316ADM	2048	8	SC	MNX	600n	1.0	0.0	5.0	2.2	0.8§	100u△	.45	5	9	CS;OR-Tie	B182	ML133e
36	EA8316ADC	2048	8	SC	MNX	600n	800m	0.0	5.0	.80	2.2§	1.6m	.40	0	7		B182	ML133e
37	EA8316ADM	2048	8	SC	MNX	600n	800m	0.0	5.0	.80	2.2§	1.6m	.40	5	9		B182	ML133e
38	MCM6590L	2048	8	SC	MNX	800n	405m	3.0	12	.80	3.0§	1.6m	.40	0	7		B144	ML150
39#	FDR151BZ	2048	8	SC	MPX	1.2u	525m	12	5.0	3.5	.60	1.6m	.40	0	7		B94	ML118b
40#	FDR151Z	2048	8	SC	MPX	1.2u	525m	12	5.0	3.5	.60	1.6m	.40	0	7		B94	ML41
41	MCS2316	2048	8	SC	MXX	450n	500m	0.0	5.0	.80	2.0§	2.1m	.40	0	7	ROM	B429	ML381
42	MPS2316	2048	8	SC	MXX	450n	500m	0.0	5.0	.80	2.0§	2.1m	.40	0	7	ROM	B429	ML380
43	MCM68317L	2048	8	SC	NNX	500n	650m	0.0	5.0	0.8	2.0§			0	6		B211	ML256
44	MCM68317P	2048	8	SC	NNX	500n	650m	0.0	5.0	0.8	2.0§			0	6		B211	ML133
45	D2716	2048	8	SE		450n	500m	0.0	5.0	.80	2.0	2.1m	.45	0	7	EPROM	B298	ML359d
46#	MN2716	2048	8	SE		450n	500m	0.0	5.0	.80	2.2			1	7	EP ROM	B297b	ML207m
47#	uPD2716D	2048	8	SE		450n	525m	0.0	5.0	0.8	2.0	10u△	5.2	1	7	EPROM		
48▼	ID8355A-8	2048	8	SE		750n	1.5 ☑	0.0	5.0	0.8	2.0	10u△		4	8	EPROM	B467	
49	SN74S455N	2048	8	SE	BTD	45n†	625m	0.0	5.0	.80	2.0△	16m	.50	0	7	PROM	PN18ba	ML3k
50▼	29681ADC	2048	8	SE	BTD	50n	1.2 ☑	0.5#	7.0#	0.8	2.0§	100u	4.5	0	7	CS;PROM;Pwr Sw	B398	ML423
51▼	29681ASC	2048	8	SE	BTD	50n	1.2 ☑	0.5#	7.0#	0.8	2.0§	100u	4.5	0	7	CS;PROM;Pwr Sw	B398	ML424
52▼	29683ADC	2048	8	SE	BTD	50n	1.2 ☑	0.5#	7.0#	0.8	2.0§	100u	4.5	0	7	CS;PROM;Pwr Sw	B398	ML423
53▼	29683ASC	2048	8	SE	BTD	50n	1.2 ☑	0.5#	7.0#	0.8	2.0§	100u	4.5	0	7	CS;PROM;Pwr Sw	B398	ML424
54	SN54S452J	2048	8	SE	BTD	50n†	625m	0.0	5.0	.80	2.0§	12m	.50	5	C	PROM	PN24ef	ML30k
55	SN54S453J	2048	8	SE	BTD	50n†	625m	0.0	5.0	.80	2.0△	12m	.50	5	C	PROM	PN24ef	ML30k
56	SN74S452J	2048	8	SE	BTD	50n†	625m	0.0	5.0	.80	2.0§	12m	.50	0	7	PROM	PN24ef	ML30k
57	SN74S452N	2048	8	SE	BTD	50n†	625m	0.0	5.0	.80	2.0§	12m	.50	0	7	PROM	PN24ef	ML72f
58	SN74S453J	2048	8	SE	BTD	50n†	625m	0.0	5.0	.80	2.0△	12m	.50	0	7	PROM	PN24ef	ML30k
59	SN74S453N	2048	8	SE	BTD	50n†	625m	0.0	5.0	.80	2.0△	12m	.50	0	7	PROM	PN24ef	ML72f
60▼	MB7138E	2048	8	SE	BTD	55n	900m	0.0	5.0	0.8	2.0§	40u△		0	7	Schott PROM	PN24ef	ML193
61	HM1-76160-5	2048	8	SE	BTD	60n	900m	0.0	5.0	.80	2.0△	16m	.50	0	7	PROM	B395	ML310
62	D3636-1	2048	8	SE	BTD	65n	.05m†%	0.0	5.0	.85	2.0§	40u△	5.5	0	7	PROM	B456	ML359d
63▼	29681ADM	2048	8	SE	BTD	70n	1.2 ☑	0.5#	7.0#	0.8	2.0§	100u	4.5	5	C	CS;PROM;Pwr Sw	B398	ML423
64▼	29681ASM	2048	8	SE	BTD	70n	1.2 ☑	0.5#	7.0#	0.8	2.0§	100u	4.5	5	C	CS;PROM;Pwr Sw	B398	ML424
65	MCM7684DC	2048	8	SE	BTD	70n	600m	0.0	5.0	.80	2.0△	16m	.45	0	7	PROM	B393	ML373
66	MCM7685DC	2048	8	SE	BTD	70n	600m	0.0	5.0	.80	2.0§	16m	.45	0	7	PROM	B393	ML☑
67▼	29683ADM	2048	8	SE	BTD	75n	1.2 ☑	0.5#	7.0#	0.8	2.0§	100u	4.5	5	C	CS;PROM;Pwr Sw	B398	ML423
68▼	29683ASM	2048	8	SE	BTD	75n	1.2 ☑	0.5#	7.0#	0.8	2.0§	100u	4.5	5	C	CS;PROM;Pwr Sw	B398	ML424
69	29681DC	2048	8	SE	BTD	80n	900mØ	0.0	5.0	.80	2.0§	16m	.50	0	7	PROM	B398	ML☑
70▼	29681SC	2048	8	SE	BTD	80n	1.2 ☑	0.5#	7.0#	0.8	2.0§	100u	4.5	0	7	CS;PROM;Pwr Sw	B398	ML424
71▼	29683SC	2048	8	SE	BTD	80n	1.2 ☑	0.5#	7.0#	0.8	2.0§	100u	4.5	0	7	CS;PROM;Pwr Sw	B398	ML424
72	D3636	2048	8	SE	BTD	80n	.05m†%	0.0	5.0	.85	2.0§	40u△	5.5	0	7	PROM	B456	ML359d
73	DM87S190J	2048	8	SE	BTD	80n	875m	0.0	5.0	.80	2.0△	12m	.45	0	7	PROM	B428	ML200
74	DM87S190N	2048	8	SE	BTD	80n	875m	0.0	5.0	.80	2.0△	12m	.45	0	7	PROM	B428	ML200
75	DM87S191J	2048	8	SE	BTD	80n	875m	0.0	5.0	.80	2.0§	12m	.45	0	7	PROM	B428	ML200
76	DM87S191N	2048	8	SE	BTD	80n	875m	0.0	5.0	.80	2.0§	12m	.45	0	7	PROM	B428	ML72f
77	HM1-76160-2	2048	8	SE	BTD	80n	900m	0.0	5.0	.80	2.0△	16m	.50	5	C	PROM	B395	ML310
78	HM9-76160-2	2048	8	SE	BTD	80n	900m	0.0	5.0	.80	2.0△	16m	.50	5	C	PROM	B395	FL58
79	MD3636	2048	8	SE	BTD	80n	.05m†%	0.0	5.0	.85	2.0§	40u△	5.25	5	C	PROM	B456	ML359d
80	29683DC	2048	8	SE	BTD	85n	900mØ	0.0	5.0	.80	2.0§	16m	.50	0	7	PROM;Pwr Sw	B398	ML☑
81	MCM7684DM	2048	8	SE	BTD	85n	700m	0.0	5.0	.80	2.0△	16m	.45	5	C	PROM	B393	ML373
82	MCM7685DM	2048	8	SE	BTD	85n	700m	0.0	5.0	.80	2.0§	16m	.45	5	C	PROM	B393	ML☑
83	29681DM	2048	8	SE	BTD	100n	900mØ	0.0	5.0	.80	2.0§	16m	.50	5	C	PROM	B398	ML☑
84▼	29681SM	2048	8	SE	BTD	100n	1.2 ☑	0.5#	7.0#	0.8	2.0§	100u	4.5	5	C	CS;PROM;Pwr Sw	B398	ML424
85	DM77S190J	2048	8	SE	BTD	100n	925m	0.0	5.0	.80	2.0	12m	.50	5	C	PROM	B428	ML200
86	DM77S191J	2048	8	SE	BTD	100n	925m	0.0	5.0	.80	2.0§	12m	.50	5	C	PROM	B428	ML200
87	29683DM	2048	8	SE	BTD	105n	900mØ	0.0	5.0	.80	2.0§	16m	.50	5	C	PROM;Pwr Sw	B398	ML☑
88▼	29683SM	2048	8	SE	BTD	105n	1.2 ☑	0.5#	7.0#	0.8	2.0§	100u	4.5	5	C	CS;PROM;Pwr Sw	B398	ML424
89▼	5275-1J24	2048	8	SE	BTD	110n	950m	0.0	7.0	.80	2.0△	10m	.50	5	C	ROM	PN24ef	ML276
90▼	5276-1J24	2048	8	SE	BTD	110n	950m	0.0	7.0	.80	2.0§	10m	.50	5	C	ROM	PN24ef	ML276
91▼	6275-1J24	2048	8	SE	BTD	110n	950m	0.0	7.0	.80	2.0△	10m	.50	0	7	ROM	PN24ef	ML276
92▼	6276-1J24	2048	8	SE	BTD	110n	950m	0.0	7.0	.80	2.0§	10m	.50	0	7	ROM	PN24ef	ML276
93	N82S190I	2048	8	SE	BTX	80n	40ut%	0.0	5.0	.85	2.0△	9.6m	.45	0	7	PROM	B305	ML256
94	N82S190N	2048	8	SE	BTX	80n	875m	0.0	5.0	.85	2.0△	9.6m	.45	0	7	PROM	B305	ML135
95	N82S191I	2048	8	SE	BTX	80n	40ut%	0.0	5.0	.85	2.0§	9.6m	.45	0	7	PROM	B305	ML256
96#	RC82S190I	2048	8	SE	BTX	100n	925m	0.0	5.0	.80	2.0△	9.6m	.50	5	C	PROM	B305	ML256
97#	RC82S190N	2048	8	SE	BTX	100n	925m	0.0	5.0	.80	2.0△	9.6m	.50	5	C	PROM	B305	ML135
98#	RC82S191I	2048	8	SE	BTX	100n	925m	0.0	5.0	.80	2.0§	9.6m	.50	5	C	PROM	B305	ML256
99	S82S191I	2048	8	SE	BTX	100n	925m	0.0	5.0	.80	2.0§	9.6m	.50	5	C	PROM	B305	ML256
100	ID2716	2048	8	SE	BTX	450n	132m♦	0.0	5.0	.80	2.0	10u△	5.25	4	8	EPROM	B297a	ML359d
101	MD2716	2048	8	SE	BTX	450n	165m♦	0.0	5.0	.80	2.0	10u△	5.5	5	9	EPROM	B297a	ML359d
102	MM1-PROM	2048	8	SE	MNG		4.5	12	5.0	.80	2.0					EPROM		
103	MK2716J-5	2048	8	SE	MNG	300n	500m	0.0	5.0	.80	2.0	10u△	5.25	0	7	EPROM	PN24dk	ML390
104	MK2716T-5	2048	8	SE	MNG	300n	500m	0.0	5.0	.80	2.0	10u△	5.25	0	7	EPROM	PN24dk	ML191
105	TMS27A16C	2048	8	SE	MNG	300n	1.0	5.0	12	.65	3.8§	1.6m	.45	0	7	EPROM	B298	ML374
106	TMS27A16L	2048	8	SE	MNG	300n	1.0	5.0	12	.65	3.8§	1.6m	.45	0	7	EPROM	B289	ML373
107	uPD8755AD	2048	8	SE	MNG	320n△	1.5 ☑	0.0	5.0	.80	2.0§	10u△	.45	1	7	EPROM	B467b	
108	MK2716J-6	2048	8	SE	MNG	350n	500m	0.0	5.0	.80	2.0	10u△	5.25	0	7	EPROM	PN24dk	ML390
109	MK2716T-6	2048	8	SE	MNG	350n	500m	0.0	5.0	.80	2.0	2.1m	.45	0	7	EPROM	PN24dk	ML191
110	MM2716Q-1	2048	8	SE	MNG	350n	525m	0.0	5.0	.80	2.0§	2.1m	.45	0	7	EPROM	B297	ML378

SYMBOLS AND CODES EXPLAINED IN INTERPRETER

3. READ ONLY MEMORIES (ROMS)

IN ORDER OF (1)No.WDS(2)No.BITS/WD(3)OP.MODE PRG.CODE(4)STRUCT.(5)MAX ACC.TIME(6)TYPE No.

LINE No.	6 TYPE No.	ORGANIZATION 1 No. WORDS	2 BITS PER WORD	3 OP MODE PROG CODE	4 STRUCTURE CODE	5 MAX ACCESS TIME (s)	MAX OPER. POWER DISS. (W)	RATED POWER SUP. SPAN NEG. (V)	POS. (V)	INPUT LOGIC LEVELS MAX '0' (V)	MIN '1' (V)	MIN OUTPUT SINK CURRENT (A)	@ OUT (V)	OPER. TEMP. RANGE CODE -	+	GENERAL DESCRIPTION	DRAWINGS LOGIC/ BLOCK	OUTLINE
1	MK2716T-7	2048	8	SE	MNG	390n	500m	0.0	5.0	.80	2.0	2.1m	.45	0	7	EPROM	PN24dk	ML191
2	MM2716Q-2	2048	8	SE	MNG	390n	525m	0.0	5.0	.80	2.0§	2.1m	.45	0	7	EPROM	B297	ML378
3	F2716DC	2048	8	SE	MNG	450n	500m	0.0	5.0	.80	2.0§	2.1m	.45	0	7	EPROM	B297	ML322
4#	MBM2716	2048	8	SE	MNG	450n	1.0 ☑	0.0	5.0	.80	2.0	2.1m	.45	2	8	EPROM	B308	ML224
5	MCM2716C	2048	8	SE	MNG	450n	500m	0.0	5.0	.80	2.0	2.1m	.45	0	7	EPROM	B289	ML374
6	MCM2716L	2048	8	SE	MNG	450n	500m	0.0	5.0	.80	2.0	2.1m	.45	1	8	EPROM	B289	ML373
7	MK2716J-8	2048	8	SE	MNG	450n	500m	0.0	5.0	.80	2.0	10uΔ	5.25	0	7	EPROM	PN24dk	ML390
8	MK2716T-8	2048	8	SE	MNG	450n	500m	0.0	5.0	.80	2.0	2.1m	.45	0	7	EPROM	PN24dk	ML191
9	MM2716QE	2048	8	SE	MNG	450n	1.5 ☑	0.0	5.0	.80	2.0§	10uΔ	5.5	4	8	EPROM	B297	ML☑
10	MM2716QM	2048	8	SE	MNG	450n	632m	0.0	5.0	.80	2.0§	2.1m	.45	5	C	EPROM	B297	ML378
11#	SFF71716J	2048	8	SE	MNG	450n		0.0	5.0	0.8	2.0	2.1m	0.45	0	7	Pwr Sw;PROM	B289	ML322
12#	SFF71716K	2048	8	SE	MNG	450n		0.0	5.0	0.8	2.0	2.1m	0.45	0	7	Pwr Sw;PROM	B289	ML322
13	TMS2516JL	2048	8	SE	MNG	450n	560m	0.0	5.0	.80	2.2	2.1m	.45	0	7	EPROM	B226a	ML30k
14	TMS2716JL	2048	8	SE	MNG	450n	714m	5.0	12	.65	2.4§	1.6m	.45	0	7	EPROM	B269	ML30k
15	TMS2716L	2048	8	SE	MNG	450n	1.0	5.0	12	.65	3.8§	1.6m	.45	0	7	EPROM	B289	ML373
16	MK2716J-7	2048	8	SE	MNG	490n	500m	0.0	5.0	.80	2.0	10uΔ	5.25	0	7	EPROM	PN24dk	ML390
17#	MSM2716AS	2048	8	SE	MNG	500n†	500m†	0.0	28	.80	2.2	2.1m	.45	0	7	EPROM		ML☑
18#	HN48016P	2048	8	SE	MNX	350n	300m	0.0	5.0	.80	2.0§	10uΔ	5.25	0	7	EAROM	B432	ML288
19#	HN462716	2048	8	SE	MNX	450n	385m	0.0	5.0	.80	2.0§	1.6m	.40	2	7	EPROM	B297b	ML289
20♦#	HN462716G	2048	8	SE	MNX	450n	555m			.80	2.0§	10uΔ	5.25	0	7	EPROM	B297	ML412
21▼	NSC830IJ	2048	8	SS	MCG	250n	1.0	0.0	5.0	1.5	3.5	2.0m	0.4	4	8	PR	A535	ML435
22▼	NSC830IN	2048	8	SS	MCG	250n	1.0	0.0	5.0	1.5	3.5	2.0m	0.4	4	8	PR	A535	ML436
23▼	NSC830J	2048	8	SS	MCG	250n	1.0	0.0	5.0	1.5	3.5	2.0m	0.4	0	7	PR	A535	ML435
24▼	NSC830N	2048	8	SS	MCG	250n	1.0	0.0	5.0	1.5	3.5	2.0m	0.4	0	7	PR	A535	ML436
25	IM6316IDG	2048	8	SS	MCG	400n†Ø	500ut♦	0.0	5.0	-2.0	.80§	1.0uΔ		4	8	CS	B461	ML400
26	IM6316IJG	2048	8	SS	MCG	400n†Ø	500ut♦	0.0	5.0	-2.0	.80§	1.0uΔ		4	8	CS	B461	ML401
27	IM6316MDG	2048	8	SS	MCG	400n†Ø	500ut♦	0.0	5.0	-2.0	.80§	1.0uΔ		5	C	CS	B461	ML400
28	IM6316MJG	2048	8	SS	MCG	400n†Ø	500ut♦	0.0	5.0	-2.0	.80§	1.0uΔ		5	C	CS	B461	ML401
29	SCM5317	2048	8	SS	MCX	580n	50mt	0.0	5.0	0.8	2.0§	1.0uΔ				Latched Out	B460	
30#	HN462316EP	2048	8	SS	MNG	350n		0.0	5.0	.80	2.0§	10uΔ	2.4	2	7	CSROM	B291a	ML288
31	MK34000J-3	2048	8	SS	MNG☑	350n	330m	0.0	5.0	0.8	2.0§	10uΔ		0	7	3CS	B263	ML390
32	KM8657	2048	8	SS	MPA	800n	440m	3	12							out:3state TTL		
33	D2716-1	2084	8	SE		350n	525m	0.0	5.0	.80	2.0	10uΔ	5.25	0	6	EPROM	B297a	ML359
34	D2716-2	2084	8	SE		390n	525m	0.0	5.0	.80	2.0	10uΔ	5.25	0	6	EPROM	B297a	ML359
35	D2716-5	2084	8	SE		490n	525m	0.0	5.0	.80	2.0	10uΔ	5.25	0	6	EPROM	B297a	ML359
36	D2716-6	2084	8	SE		650n	525m	0.0	5.0	.80	2.0	10uΔ	5.25	0	6	EPROM	B297a	ML359
37♦	TMM2332P	4096	8		MNG	350n	550m	0.0	5.0	0.8	2.0	2.0m	0.4	0	7		B479	ML118e
38▼	TMM2732D	4096	8		MNG	350n	788m	0.0	5.0	.80	2.0	2.1m	.40	0	7		B299	ML403
39▼	TMM333P	4096	8		MNG	450n	525m	0.0	5.0	.80	2.0	2.1m	.40	0	7		B478	ML118e
40▼	EA8332A1DC	4096	8	S	MNG	350n	450m	0.0	5.0	.80	2.0§						B431	
41▼	EA8332A1PC	4096	8	S	MNG	350n	450m	0.0	5.0	.80	2.0§						B431	
42▼	EA8332B1DC	4096	8	S	MNG	350n	450m	0.0	5.0	.80	2.0§						B431	
43	EA8332ADC	4096	8	S	MNG☑	450n	450m	0.0	5.0	0.8	2.0§						B431	
44	EA8332APC	4096	8	S	MNG☑	450n	450m	0.0	5.0	0.8	2.0§						B431	ML168
45	EA8332BDC	4096	8	S	MNG☑	450n	450m	0.0	5.0	0.8	2.0§						B431	
46	EA8332BPC	4096	8	S	MNG☑	450n	450m	0.0	5.0	0.8	2.0§						B431	
47#	M5L2732K-6	4096	8	S	MNG	550n	400mt	0.0	5.0					0	7	EPROM;Fld Prg		DL☑
48♦	S2332	4096	8	S	MNX	350n	1.0 ☑	0.0	5.0	0.8	2.0§	10uΔ		0	7	2SC;OR-Tie	B470	ML310
49#	MN2332	4096	8	SC		300n	200m	0.0	5.0	.80	2.4			1	7	ROM	B232	ML207m
50	SYC2332-3	4096	8	SC	BTX	300n	1.0	0.0	5.0	.80	2.0§	10uΔ	.40	0	7	PROM	B232	ML256
51	SYC2333-3	4096	8	SC	BTX	300n	1.0	0.0	5.0	.80	2.0§	10uΔ	.40	0	7	PROM	B232a	ML256
52	SYP2332-3	4096	8	SC	BTX	300n	1.0	0.0	5.0	.80	2.0§	10uΔ	.40	0	7	PROM	B232	ML183b
53	SYP2333-3	4096	8	SC	BTX	300n	1.0	0.0	5.0	.80	2.0§	10uΔ	.40	0	7	PROM	B232a	ML183b
54	SYC2332	4096	8	SC	BTX	450n	1.0 ☑	0.0	5.0	.80	2.0§	10uΔ	.40	0	7	PROM	B232	ML256
55	SYC2333	4096	8	SC	BTX	450n	1.0	0.0	5.0	.80	2.0§	10uΔ	.40	0	7	PROM	B232a	ML381
56	SYP2332	4096	8	SC	BTX	450n	1.0 ☑	0.0	5.0	.80	2.0§	10uΔ	.40	0	7	PROM	B232	ML118f
57	SYP2333	4096	8	SC	BTX	450n	1.0	0.0	5.0	.80	2.0§	10uΔ	.40	0	7	PROM	B232a	ML380
58#	M58333-XXXP	4096	8	SC	MNA	750n	300mt	0.0	5.0	.80	2.0	2.0m	.45	0	7	ROM	B232	ML118
59	MCM68A332C	4096	8	SC	MNG	350n	400m	0.0	5.0	.80	2.0§	1.6m	.40	0	7		B292	ML319
60	MCM68A332P	4096	8	SC	MNG	350n	400m	0.0	5.0	.80	2.0§	1.6m	.40	0	7		B292	ML39
61#	HN46532-2	4096	8	SC	MNG	450n	440m	0.0	5.0	.80	2.0	1.6m	.40	0	7		B247	ML32c
62	MM52132D	4096	8	SC	MNG	450n	650m	0.0	5.0	.80	2.0§	3.2m	.40	0	7	ROM	B432	ML184a
63	MM52132N	4096	8	SC	MNG	450n	650m	0.0	5.0	.80	2.0§	3.2m	.40	0	7	ROM	B432	ML72f
64	ROM4732	4096	8	SC	MNG	450n	580mt	0.0	5.0	.65	2.0§			0	7		B226	ML☑
65	TMS4732NL	4096	8	SC	MNG	450n	787m	0.0	5.0	.65	2.0§	2.0m	.40	0	7		B226	ML72f
66	uPD2332AC	4096	8	SC	MNG	450n		0.0	5.0	.80	2.0§	10uΔ	5.0	1	7	PROM	B232a	ML118f
67	uPD2332AD	4096	8	SC	MNG	450n		0.0	5.0	.80	2.0§	10uΔ	5.0	1	7	PROM	B232a	ML381
68	uPD2332BC	4096	8	SC	MNG	450n		0.0	5.0	.80	2.0§	10uΔ	5.0	1	7	PROM	B232a	ML118f
69	uPD2332BD	4096	8	SC	MNG	450n		0.0	5.0	.80	2.0§	10uΔ	5.0	1	7	PROM	B232a	ML381
70#	HN46532P-2	4096	8	SC	MNG	480n	200mt	0.0	5.0	.80	2.2	10uΔ	2.4	2	7		B247	DL☑
71	MCM68332L	4096	8	SC	MNG	500n	650m	0.0	5.0	0.8	2.0§			0	6		B292	ML256
72	MCM68332P	4096	8	SC	MNG	500n	650m	0.0	5.0	0.8	2.0§			0	6		B292	ML133
73♦#	HN46532P-3	4096	8	SC	MNG	600n	200mt	0.0	5.0	.80	2.2	10uΔ	2.4	2	7		B247	ML415
74♦#	HN46532-3	4096	8	SC	MNG	650n	440m	0.0	5.0	.80	2.2	1.6m	.40	0	7		B247	ML416
75	RO3-9332B	4096	8	SC	MNI	450n	625m	0.0	5.0	.80	2.0§	3.2m	.40	0	7		B232	ML324
76	RO3-9332A	4096	8	SC	MNI	850n	300m	0.0	5.0	.80	2.0§	3.2m	.40	0	7		B232	ML324
77	AM9232CCC	4096	8	SC	MNX	300n	1.0 ☑	0.0	5.0	.80	2.0§	3.2m	.40	7	0		B444	ML239
78	AM9232CDC	4096	8	SC	MNX	300n	1.0 ☑	0.0	5.0	.80	2.0§	3.2m	.40	7	0		B444	M207n
79	AM9232CPC	4096	8	SC	MNX	300n	1.0 ☑	0.0	5.0	.80	2.0§	3.2m	.40	7	0		B444	ML310
80	AM9233CCC	4096	8	SC	MNX	300n	1.0 ☑	0.0	5.0	.80	2.0§	3.2m	.40	0	7		B444a	ML239
81	AM9233CDC	4096	8	SC	MNX	300n	1.0 ☑	0.0	5.0	.80	2.0§	3.2m	.40	0	7		B444a	M207n
82	AM9233CPC	4096	8	SC	MNX	300n	1.0 ☑	0.0	5.0	.80	2.0§	3.2m	.40	7	0		B444a	ML310
83	R2332-3C	4096	8	SC	MNX	300n	600m	0.0	5.0	.80	2.0§	2.1m	.40	0	7		B232	ML256
84	R2332-3CE	4096	8	SC	MNX	300n	675m	0.0	5.0	.80	2.0§	2.1m	.40	4	8		B232	ML256
85	R2332-3CMT	4096	8	SC	MNX	300n	750m	0.0	5.0	.80	2.0§	2.1m	.40	5	C		B232	ML256
86	R2332-3P	4096	8	SC	MNX	300n	600m	0.0	5.0	.80	2.0§	2.1m	.40	0	7		B232	ML88h
87	R2332-3PE	4096	8	SC	MNX	300n	675m	0.0	5.0	.80	2.0§	2.1m	.40	4	8		B232	ML88h
88	AM9232BCC	4096	8	SC	MNX	450n	1.0 ☑	0.0	5.0	.80	2.0§	3.2m	.40	7	0		B444	ML239
89	AM9232BDC	4096	8	SC	MNX	450n	1.0 ☑	0.0	5.0	.80	2.0§	3.2m	.40	7	0		B444	M207n
90	AM9232BDM	4096	8	SC	MNX	450n	1.0 ☑	0.0	5.0	.80	2.0§	3.2m	.40	5	C		B444	M207n
91	AM9232BPC	4096	8	SC	MNX	450n	1.0 ☑	0.0	5.0	.80	2.0§	3.2m	.40	7	0		B444	ML310
92	AM9233BCC	4096	8	SC	MNX	450n	1.0 ☑	0.0	5.0	.80	2.0§	3.2m	.40	7	0		B444a	ML239
93	AM9233BDC	4096	8	SC	MNX	450n	1.0 ☑	0.0	5.0	.80	2.0§	3.2m	.40	7	0		B444a	M207n
94	AM9233BDM	4096	8	SC	MNX	450n	1.0 ☑	0.0	5.0	.80	2.0§	3.2m	.40	5	C		B444a	M207n
95	AM9233BPC	4096	8	SC	MNX	450n	1.0 ☑	0.0	5.0	.80	2.0§	3.2m	.40	7	0		B444a	ML310
96	R2332C	4096	8	SC	MNX	450n	600m	0.0	5.0	.80	2.0§	2.1m	.40	0	7		B232	ML256
97	R2332CE	4096	8	SC	MNX	450n	675m	0.0	5.0	.80	2.0§	2.1m	.40	4	8		B232	ML256
98	R2332CMT	4096	8	SC	MNX	450n	750m	0.0	5.0	.80	2.0§	2.1m	.40	5	C		B232	ML256
99	R2332P	4096	8	SC	MNX	450n	600m	0.0	5.0	.80	2.0§	2.1m	.40	0	7		B232	ML88h
100	R2332PE	4096	8	SC	MNX	450n	675m	0.0	5.0	.80	2.0§	2.1m	.40	4	8		B232	ML88h
101▼	S68A332	4096	8	SC	MNX	450n	500m	0.0	5.0	.80	2.0	2.1m	.40	0	7	ROM	A463	ML☑
102#	uPD2332C	4096	8	SC	MNX	450n	550m	0.0	5.0	.80	2.0§	2.0m	.45	1	7		B232	ML369
103#	uPD2332D	4096	8	SC	MNX	450n	550m	0.0	5.0	.80	2.0§	2.0m	.45	1	7		B232	ML72g
104	CM3200-C	4096	8	SC	MNX	600n	105m	0.0	5.0	.65	2.4§	2.1u	.40	0	7	CMOS ROM	B226c	ML207
105	CM3200-D	4096	8	SC	MNX	600n	105m	0.0	5.0	.65	2.4§	2.1u	.40	0	7	CMOS ROM	B226c	ML183
106	CM3200-P	4096	8	SC	MNX	600n	105m	0.0	5.0	.65	2.4§	2.1u	.40	0	7	CMOS ROM	B226c	ML319
107	MM3200-C	4096	8	SC	MNX	600n	150m	0.0	5.0	.65	2.4§	2.1u	.40	5	C	CMOS ROM	B226c	ML207
108	CM3200-2C	4096	8	SC	MNX	800n	105m	0.0	5.0	.65	2.4§	2.1u	.40	0	7	CMOS ROM	B226c	ML207
109	CM3200-2D	4096	8	SC	MNX	800n	105m	0.0	5.0	.65	2.4§	2.1u	.40	0	7	CMOS ROM	B226c	ML183
110	CM3200-2P	4096	8	SC	MNX	800n	105m	0.0	5.0	.65	2.4§	2.1u	.40	0	7	CMOS ROM	B226c	ML319

SYMBOLS AND CODES EXPLAINED IN INTERPRETER

3. READ ONLY MEMORIES (ROMS)

IN ORDER OF (1)No.WDS(2)No.BITS/WD(3)OP.MODE PRG.CODE(4)STRUCT.(5)MAX ACC.TIME(6)TYPE No.

LINE No.	6 TYPE No.	ORGANIZATION 1 No. WORDS	2 BITS PER WORD	3 OP MODE PROG CODE	4 STRUCTURE CODE	5 MAX ACCESS TIME (s)	MAX OPER. POWER DISS. (W)	RATED POWER SUP. SPAN NEG. (V)	RATED POWER SUP. SPAN POS. (V)	INPUT LOGIC LEVELS MAX '0' (V)	INPUT LOGIC LEVELS MIN '1' (V)	MIN OUTPUT SINK CURRENT (A)	MIN OUTPUT SINK CURRENT @ OUT (V)	OPER. TEMP. RANGE CODE -	OPER. TEMP. RANGE CODE +	GENERAL DESCRIPTION	DRAWINGS LOGIC/ BLOCK	DRAWINGS OUTLINE
1	MM3200-2C	4096	8	SC	MNX	800n	150m	0.0	5.0	.65	2.4§	2.1u	.40	5	C	CMOS ROM	B226c	ML207
2	CM3200-3C	4096	8	SC	MNX	1.5u	105m	0.0	5.0	.65	2.4§	2.1u	.40	0	7	CMOS ROM	B226c	ML207
3	CM3200-3D	4096	8	SC	MNX	1.5u	105m	0.0	5.0	.65	2.4§	2.1u	.40	0	7	CMOS ROM	B226c	ML183
4	CM3200-3P	4096	8	SC	MNX	1.5u	105m	0.0	5.0	.65	2.4§	2.1u	.40	0	7	CMOS ROM	B226c	ML319
5	MM3200-3C	4096	8	SC	MNX	1.5u	150m	0.0	5.0	.65	2.4§	2.1u	.40	5	C	CMOS ROM	B226c	ML207
6	MCS2332	4096	8	SC	MXX	450n	600m	0.0	5.0	.80	2.0§	2.1m	.40	0	7	ROM	B430	ML381
7	MPS2332	4096	8	SC	MXX	450n	600m	0.0	5.0	.80	2.0§	2.1m	.40	0	7	ROM	B430	ML380
8	D2732A	4096	8	SE		250n	750m	0.0	5.0	.80	2.0§	10uΔ	5.25	1	7	EPROM	B299	ML359d
9	D2732	4096	8	SE		450n	750m	0.0	5.0	.80	2.0§	2.1m	.45	0	7	EPROM	B299	ML359d
10#	HN462532	4096	8	SE		450n	858m	0.0	5.0	.80	2.0§	10uΔ	.40	0	7	EPROM	B229a	ML☑
11▼#	uPD2732D	4096	8	SE		450n		0.0	5.0	.80	2.0	10uΔ	5.25	0	7	EAROM	B299	ML439
12	D2732-6	4096	8	SE		550n	750m	0.0	5.0	.80	2.0§	10uΔ	5.25	1	7	EPROM	B299	ML359d
13	uPD2732	4096	8	SE	MNG			0.0	5.0							EPROM	PN24dn	
14	D2764	4096	8	SE	MNG	250n	750m	0.0	5.0									
15	MCM25A32C	4096	8	SE	MNG	350n	800m	0.0	5.0	.65	2.2	10uΔ	5.2	0	7	EPROM	B439	ML374
16	MCM25A32L	4096	8	SE	MNG	350n	800m	0.0	5.0	.65	2.2	10uΔ	5.2	0	7	EPROM	B439	ML373
17#	HN462732	4096	8	SE	MNG	450n	858m†	0.0	5.0	.80	2.0	2.1m	.40	0	7	EPROM		ML289
18#	MBM2732	4096	8	SE	MNG	450n		0.0	5.0	.80	2.2	1.6m	.40	0	7	EPROM		
19▼	MCM68L732C	4096	8	SE	MNG	450n		0.0	5.0	.80	2.0	10uΔ	5.25	0	7	EAROM	B438	ML374a
20▼	MCM68L732L	4096	8	SE	MNG	450n		0.0	5.0	.80	2.0	10uΔ	5.25	0	7	EAROM	B438	ML373
21	MCM2532C	4096	8	SE	MNG	450n	800m	0.0	5.0	.65	2.2	10uΔ	5.2	0	7	EPROM	B439	ML374
22	MCM2532L	4096	8	SE	MNG	450n	800m	0.0	5.0	.65	2.2	10uΔ	5.2	0	7	EPROM	B439	ML373
23▼	MCM68732C0	4096	8	SE	MNG	450n		0.0	5.0	.80	2.0	10uΔ	5.25	0	7	EAROM	B438	ML374a
24▼	MCM68732C1	4096	8	SE	MNG	450n		0.0	5.0	.80	2.0	10uΔ	5.25	0	7	EAROM	B438	ML374a
25▼	MCM68732C	4096	8	SE	MNG	450n		0.0	5.0	.80	2.0	10uΔ	5.25	0	7	EAROM	B438	ML374a
26▼	MCM68732L1	4096	8	SE	MNG	450n		0.0	5.0	.80	2.0	10uΔ	5.25	0	7	EAROM	B438	ML373
27▼	MCM68732L	4096	8	SE	MNG	450n		0.0	5.0	.80	2.0	10uΔ	5.25	0	7	EAROM	B438	ML373
28	TMS25L32JL	4096	8	SE	MNG	450n	910m	0.0	5.0	.65	2.2§	2.1m	.45	0	7	EPROM	B226b	ML30k
29	TMS2532JL	4096	8	SE	MNG	450n	910m	0.0	5.0	.65	2.2§	2.1m	.45	0	7	EPROM	B226b	ML30k
30	NMC2532Q	4096	8	SE	MXG	450n	160m	0.0	5.0	.65	2.2§	10uΔ	5.25	0	7	EPROM	B226a	ML☑
31	NMC2732Q	4096	8	SE	MXG	450n	150m	0.0	5.0	.80	2.0§			0	7	EPROM	B299	ML☑
32▼	R2332-35LC	4096	8	SS	BTX	350n	240m†	0.0	5.0	.80	2.0§	3.7m	.40	0	7	ROM	B232e	DL☑
33▼	R2332-35LP	4096	8	SS	BTX	350n	240m†	0.0	5.0	.80	2.0§	3.7m	.40	0	7	ROM	B232e	DL☑
34▼	R2332-4LC	4096	8	SS	BTX	400n	240m†	0.0	5.0	.80	2.0§	3.7m	.40	0	7	ROM	B232e	DL☑
35▼	R2332-4LCE	4096	8	SS	BTX	400n	240m†	0.0	5.0	.80	2.0§	3.7m	.40	4	8	ROM	B232e	DL☑
36▼	R2332-4LP	4096	8	SS	BTX	400n	240m†	0.0	5.0	.80	2.0§	3.7m	.40	0	7	ROM	B232e	DL☑L
37▼	R2332-4LPE	4096	8	SS	BTX	400n	240m†	0.0	5.0	.80	2.0§	3.7m	.40	4	8	ROM	B232e	DL☑
38▼	R2332LC	4096	8	SS	BTX	450n	240m†	0.0	5.0	.80	2.0§	3.7m	.40	0	7	ROM	B232e	DL☑
39▼	R2332LCE	4096	8	SS	BTX	450n	240m†	0.0	5.0	.80	2.0§	3.7m	.40	4	8	ROM	B232e	DL☑
40▼	R2332LP	4096	8	SS	BTX	450n	240m†	0.0	5.0	.80	2.0§	3.7m	.40	0	7	ROM	B232e	DL☑
41▼	R2332LPE	4096	8	SS	BTX	450n	240m†	0.0	5.0	.80	2.0§	3.7m	.40	4	8	ROM	B232e	DL☑
42▼	SCM5534	4096	8	SS	MCX	730n	100m†♦	0.0	5.0	0.8	2.0§	1.0uΔ		0	7	CS:USER PROG	B470	
43▼	SCM5532	4096	8	SS	MCX	750n	100m†♦	0.0	5.0	0.8	2.0§	1.0uΔ		0	7	CS:USER PROG	B470	
44#	HN46332P	4096	8	SS	MNG	350n		0.0	5.0	.80	2.0§	10uΔ	2.4	2	7	CSROM	B292	ML288
45#	M5L2732K	4096	8	SS	MNG	450n	787m	0.0	5.0	0.8	2.2	2.1m	.45	0	7	EPROM	B299	DL☑
46#	M58334-XXXP	8192	8			650n	656m	0.0	5.0	.80	2.0	2.2m	.45	0	7			
47♦	TMM2364P	8192	8		MNG	250n	220m	0.0	5.0	0.8	2.2	3.2m	0.4	0	7		B480	ML32c
48	SYC2364	8192	8	S	BTX	450n	500m	0.0	5.0	.80	2.0§	10uΔ	.40	0	7		B232	ML381
49	SYP2364	8192	8	S	BTX	450n	500m	0.0	5.0	.80	2.0§	10uΔ	.40	0	7		B232	ML380
50	IM6364MJG	8192	8	S	MCG	300n†Ø	500u†♦	0.0	5.0		§			5	C		B465	ML401
51	CM6400-3C	8192	8	S	MCX	1.5u	120m	0.0	5.0	.65	2.0	2.1m	.40	0	7			
52	CM6400-3P	8192	8	S	MCX	1.5u	120m	0.0	5.0	.65	2.0	2.1m	.40	0	7			
53#	M36000-4B1	8192	8	S	MNG	250n	220m	0.0	5.0	.80	2.4	3.3m	.40	0	7		B262	ML191
54#	M36000-4D1	8192	8	S	MNG	250n	220m	0.0	5.0	.80	2.4	3.3m	.40	0	7		B262	ML191
55#	M36000-4F1	8192	8	S	MNG	250n	220m	0.0	5.0	.80	2.4	3.3m	.40	0	7		B262	ML310
56	MKB36000P-80	8192	8	S	MNG	250n	220m	0.0	5.0	.80	2.4§	10uΔ		4	8		B262	
57#	M36000-5B1	8192	8	S	MNG	300n	220m	0.0	5.0	.80	2.4	3.3m	.40	0	7		B262	ML191
58#	M36000-5D1	8192	8	S	MNG	300n	220m	0.0	5.0	.80	2.4	3.3m	.40	0	7		B262	ML191
59#	M36000-5F1	8192	8	S	MNG	300n	220m	0.0	5.0	.80	2.4	3.3m	.40	0	7		B262	ML310
60	MKB36000P-84	8192	8	S	MNG	300n	220m	0.0	5.0	.80	2.4§	10uΔ		5	C		B262	
61	TMS4764NL	8192	8	S	MNG	450n		0.0	5.0		§			0	7		PN24jf	ML72f
62	S2364	8192	8	S	MNX	350n	375m	4.75	5.25	0.8	2.0	3.2m	0.4	0	7			
63#	uPD2364C	8192	8	S	MNX	450n	700m	0.0	5.0	0.8	2.0§	10uΔ	5.0	1	6		B126	
64#	uPD2364D	8192	8	S	MNX	450n	700m	0.0	5.0	0.8	2.0§	10uΔ	5.0	1	6		B126	ML367
65	N82S183F	8192	8	SC		60n	85u%	0.0	5.0	.85	2.0§	40u♦	.50	0	7	PROM	B425	ML☑
66	N82S183N	8192	8	SC		60n	85u%	0.0	5.0	.85	2.0§	40u♦	.50	5	C	PROM	B425	ML☑
67	SYC2364-3	8192	8	SC	BTX	300n	1.0	0.0	5.0	.80	2.0§	10uΔ	.40	0	7	PROM	B232b	ML256
68	SYP2364-3	8192	8	SC	BTX	300n	1.0	0.0	5.0	.80	2.0§	10uΔ	.40	0	7	PROM	B232b	ML183b
69	MCM68B364C	8192	8	SC	MNG	250n	300m	0.0	5.0	.80	2.0§	3.2m	.40	0	7		B328	ML319
70	MCM68B364L	8192	8	SC	MNG	250n	300m	0.0	5.0	.80	2.0§	10uΔ	5.5	0	7		B328	ML319
71	MCM68B364P	8192	8	SC	MNG	250n	300m	0.0	5.0	.80	2.0§	10uΔ	5.5	0	7		B328	ML39
72	MK36000N-4	8192	8	SC	MNG	250n	325m	0.0	5.0	.80	2.0§	3.3m	.40	0	7		B262	ML118i
73	MK36000N-5	8192	8	SC	MNG	250n	325m	0.0	5.0	.80	2.0§	3.3m	.40	0	7		B262	ML118i
74	MK36000P-4	8192	8	SC	MNG	250n	200m	0.0	5.0	.80	2.0§	2.1m	.45	0	7		B262	ML191
75	MK37000J-4	8192	8	SC	MNG	250n	220m	0.0	5.0		§						B262a	
76	MK37000N-4	8192	8	SC	MNG	250n	220m	0.0	5.0		§						B262a	
77▼	ROM36000	8192	8	SC	MNG	250n	1.0 ☑	0.0	5.0	.80	2.0§	3.3m	.40	0	7	PROM	B262	ML324
78	MK36000P-5	8192	8	SC	MNG	300n	450m	0.0	5.0	.80	2.0§	3.3m	.40	0	7		B262	ML191
79	MK37000J-5	8192	8	SC	MNG	300n	220m	0.0	5.0		§						B262a	
80	MK37000N-5	8192	8	SC	MNG	300n	220m	0.0	5.0		§						B262a	
81	MK37000P-5	8192	8	SC	MNG	300n	220m	0.0	5.0	0.8	2.0	10uΔ		0	7	Pwr Sw	B262	
82	MCM68A364C	8192	8	SC	MNG	350n	300m	0.0	5.0	.80	2.0§	3.2m	.40	0	7		B328	ML319
83	MCM68A364L	8192	8	SC	MNG	350n	300m	0.0	5.0	.80	2.0§	10uΔ	5.5	0	7		B328	ML319
84	MCM68A364P	8192	8	SC	MNG	350n	300m	0.0	5.0	.80	2.0§	10uΔ	5.5	0	7		B328	ML39
85	MM52164D	8192	8	SC	MNG	450n	650m	0.0	5.0	.80	2.0§	3.2m	.40	0	7	ROM	B432	ML184a
86	MM52164N	8192	8	SC	MNG	450n	650m	0.0	5.0	.80	2.0§	3.2m	.40	0	7	ROM	B432	ML72f
87▼	S4264C	8192	8	SC	MNX	450n	1.0	0.0	5.0	.80	2.0	10uΔ	.40	0	7	TOM	B483	ML23c
88▼	S4264D	8192	8	SC	MNX	450n	1.0	0.0	5.0	.80	2.0	10uΔ	.40	0	7	ROM	B483	ML30l
89▼	S4264P	8192	8	SC	MNX	450n	1.0	0.0	5.0	.80	2.0	10uΔ	.40	0	7	ROM	B483	ML30k
90	MCM68A764C	8192	8	SE	MNG	350n	800m	0.0	5.0	.80	2.0	10uΔ	5.2	0	7	EPROM	B438	ML374
91	MCM68A764L	8192	8	SE	MNG	350n	800m	0.0	5.0	.80	2.0	10uΔ	5.2	0	7	EPROM	B438	ML373
92▼	MCM68L764-35C	8192	8	SE	MNG	350n		0.0	5.0	.80	2.0	10uΔ	5.2	0	7	UV,ERASE,EPROM	B438	ML374
93	MCM68L764-35L	8192	8	SE	MNG	350n		0.0	5.0	.80	2.0	10uΔ	5.2	0	7	UV,ERASE,EPROM	B438	ML373
94	MK2764J-8	8192	8	SE	MNG	450n	525m	0.0	5.0							EPROM		
95	MK2764T-8	8192	8	SE	MNG	450n	525m	0.0	5.0		§					EPROM	PN28ac	
96	TMS2564JL	8192	8	SE	MNG	450n	400m	0.0	5.0	.65	2.2§	2.1m	.45	0	7	EPROM	B226b	ML29
97▼	R2364A2C	8192	8	SS	BTX	200n	125m†	0.0	5.0	.80	2.0§	3.3m	.40	0	7	ROM	B468	DL☑
98▼	R2364A2CE	8192	8	SS	BTX	200n	125m†	0.0	5.0	.80	2.0§	3.3m	.40	4	8	ROM	B468	DL☑
99▼	R2364A2P	8192	8	SS	BTX	200n	125m†	0.0	5.0	.80	2.0§	3.3m	.40	0	7	ROM	B468	DL☑
100▼	R2364A2PE	8192	8	SS	BTX	200n	125m†	0.0	5.0	.80	2.0§	3.3m	.40	4	8	ROM	B468	DL☑
101▼	R2364B2C	8192	8	SS	BTX	200n	275m	0.0	5.0	.80	2.0§	3.3m	.40	0	7	ROM	B468a	DL☑
102▼	R2364B2CE	8192	8	SS	BTX	200n	275m	0.0	5.0	.80	2.0§	3.3m	.40	4	8	ROM	B468a	DL☑
103▼	R2364B2P	8192	8	SS	BTX	200n	275m	0.0	5.0	.80	2.0§	3.3m	.40	0	7	ROM	B468a	DL☑
104▼	R2364B2PE	8192	8	SS	BTX	200n	275m	0.0	5.0	.80	2.0§	3.3m	.40	4	8	ROM	B468a	DL☑
105▼	R2364A25C	8192	8	SS	BTX	250n	125m†	0.0	5.0	.80	2.0§	3.3m	.40	0	7	ROM	B468	DL☑
106▼	R2364A25CE	8192	8	SS	BTX	250n	125m†	0.0	5.0	.80	2.0§	3.3m	.40	4	8	ROM	B468	DL☑

SYMBOLS AND CODES EXPLAINED IN INTERPRETER

3. READ ONLY MEMORIES (ROMS)

IN ORDER OF (1)No.WDS(2)No.BITS/WD(3)OP.MODE PRG.CODE(4)STRUCT.(5)MAX ACC.TIME(6)TYPE No.

LINE No.	6 TYPE No.	ORGANIZATION 1 No. WORDS	2 BITS PER WORD	3 OP MODE PROG CODE	4 STRUCTURE CODE	5 MAX ACCESS TIME (s)	MAX OPER. POWER DISS. (W)	RATED POWER SUP. SPAN NEG. (V)	RATED POWER SUP. SPAN POS. (V)	INPUT LOGIC LEVELS MAX '0' (V)	INPUT LOGIC LEVELS MIN '1' (V)	MIN OUTPUT SINK CURRENT (A)	MIN OUTPUT SINK CURRENT @ OUT (V)	OPER. TEMP. RANGE CODE -	OPER. TEMP. RANGE CODE +	GENERAL DESCRIPTION	DRAWINGS LOGIC/ BLOCK	DRAWINGS OUTLINE
1▼	R2364A25P	8192	8	SS	BTX	250n	125m†	0.0	5.0	.80	2.0§	3.3m	.40	0	7	ROM	B468	DL∅
2▼	R2364A25PE	8192	8	SS	BTX	250n	125m†	0.0	5.0	.80	2.0§	3.3m	.40	4	8	ROM	B468	DL∅
3▼	R2364B25C	8192	8	SS	BTX	250n	275m	0.0	5.0	.80	2.0§	3.3m	.40	0	7	ROM	B468a	DL∅
4▼	R2364B25CE	8192	8	SS	BTX	250n	275m	0.0	5.0	.80	2.0§	3.3m	.40	4	8	ROM	B468a	DL∅
5▼	R2364B25P	8192	8	SS	BTX	250n	275m	0.0	5.0	.80	2.0§	3.3m	.40	0	7	ROM	B468a	DL∅
6▼	R2364B25PE	8192	8	SS	BTX	250n	275m	0.0	5.0	.80	2.0§	3.3m	.40	4	8	ROM	B468a	DL∅
7▼	R2364A3C	8192	8	SS	BTX	300n	125m†	0.0	5.0	.80	2.0§	3.3m	.40	0	7	ROM	B468	DL∅
8▼	R2364A3CE	8192	8	SS	BTX	300n	125m†	0.0	5.0	.80	2.0§	3.3m	.40	4	8	ROM	B468	DL∅
9▼	R2364A3P	8192	8	SS	BTX	300n	125m†	0.0	5.0	.80	2.0§	3.3m	.40	0	7	ROM	B468	DL∅
10▼	R2364A3PE	8192	8	SS	BTX	300n	125m†	0.0	5.0	.80	2.0§	3.3m	.40	4	8	ROM	B468	DL∅
11▼	R2364B3C	8192	8	SS	BTX	300n	275m	0.0	5.0	.80	2.0§	3.3m	.40	0	7	ROM	B468a	DL∅
12▼	R2364B3CE	8192	8	SS	BTX	300n	275m	0.0	5.0	.80	2.0§	3.3m	.40	4	8	ROM	B468a	DL∅
13▼	R2364B3P	8192	8	SS	BTX	300n	275m	0.0	5.0	.80	2.0§	3.3m	.40	0	7	ROM	B468a	DL∅
14▼	R2364B3PE	8192	8	SS	BTX	300n	275m	0.0	5.0	.80	2.0§	3.3m	.40	4	8	ROM	B468a	DL∅
15#	HN48364P	8192	8	SS	MNX	350n		0.0	5.0	.80	2.0§	10u△	2.4	2	7	CSROM	B328	ML288
16	MCM68764C	8198	8	SE	MNG	450n	800m	0.0	5.0	.80	2.0	10u△	5.2	0	7	EPROM	B438	ML374
17	MCM68764L	8198	8	SE	MNG	450n	800m	0.0	5.0	.80	2.0	10u△	5.2	0	7	EPROM	B438	ML373
18▼#	uPB4O9C	16384	1	SE	BTX	50n	500m	0.0	5.5	.85	2.0△	40u△	5.5	0	7	PROM	B476	ML88i
19▼#	uPB4O9C-1	16384	1	SE	BTX	50n	500m	0.0	5.5	.85	2.0△	40u△	5.5	0	7	PROM	B476	ML88i
20▼#	uPB4O9C-2	16384	1	SE	BTX	50n	500m	0.0	5.5	.85	2.0△	40u△	5.5	0	7	PROM	B476	ML88i
21▼#	uPB4O9D	16384	1	SE	BTX	50n	500m	0.0	5.5	.85	2.0△	40u△	5.5	0	7	PROM	B476	ML30I
22▼#	uPB4O9D-1	16384	1	SE	BTX	50n	500m	0.0	5.5	.85	2.0△	40u△	5.5	0	7	PROM	B476	ML30I
23▼#	uPB4O9D-2	16384	1	SE	BTX	50n	500m	0.0	5.5	.85	2.0△	40u△	5.5	0	7	PROM	B476	ML30I
24▼#	uPB429C	16384	1	SE	BTX	50n	500m	0.0	5.5	.85	2.0§	40u△	5.5	0	7	PROM	B476	ML88i
25▼#	uPB429D	16384	1	SE	BTX	50n	500m	0.0	5.5	.85	2.0§	40u△	5.5	0	7	PROM	B476	ML30I
26▼#	uPB429D-1	16384	1	SE	BTX	50n	500m	0.0	5.5	.85	2.0§	40u△	5.5	0	7	PROM	B476	ML30I
27▼#	uPB429D-2	16384	1	SE	BTX	50n	500m	0.0	5.5	.85	2.0§	40u△	5.5	0	7	PROM	B476	ML30I

SYMBOLS AND CODES EXPLAINED IN INTERPRETER

4. CHARACTER GENERATORS

IN ORDER OF (1)USE CODE(2)No.CHARACTERS (3)NO.BITS/CHAR(4)STRUCT(5)ACCESS(6)TYPE NO.

LINE No.	6 TYPE No.	1 USE CODE	2 No. CHARACTERS	3 BITS PER CHAR.	4 No. OUTPUTS	5 STRUCTURE CODE	MAX ACCESS TIME (s)	MAX OPER. POWER DISS. (W)	RATED POWER SUP. SPAN NEG. (V)	RATED POWER SUP. SPAN POS. (V)	INPUT LOGIC LEVELS MAX '0' (V)	INPUT LOGIC LEVELS MIN '1' (V)	MIN OUTPUT SINK CURRENT (A)	MIN OUTPUT SINK CURRENT @ OUT (V)	OPER. TEMP. RANGE CODE -	OPER. TEMP. RANGE CODE +	DRAWINGS LOGIC/ BLOCK	DRAWINGS OUTLINE
1#	uPD481D-001		128		8	MNX	150n	700m	0.0	5.0	.80	2.2§	2.0m	.40	1	7	C78	ML367
2#	uPD481D-002		128		8	MNX	150n	700m	0.0	5.0	.80	2.2§	2.0m	.40	1	7	C78	ML367
3#	uPD482D-001		128		9	MNX	150n	700m	0.0	5.0	.80	2.2§	2.0m	.40	1	7	C79	ML367
4#	uPD482D-002		128		9	MNX	150n	700m	0.0	5.0	.80	2.2§	2.0m	.40	1	7	C79	ML367
5#	FDR131Z2	DAC	64	35	7	MPX	1.5u	90m†	14	0.0	-9.0	-2.0			0	7	C8	ML41
6#	FDR116Z1	DAR	64	35	5	MPX	850n	90m†	14	0.0	-9.0	-2.0			5	8	C7	ML41
7#	FDR116Z2	DAR	64	35	5	MPX	850n	90m†	14	0.0	-9.0	-2.0			5	8	C7	ML41
8♦#	MSL9650A	N	64	35	35	BT			0.0	5.0	.80	2.0	10u△	4.75	0	7	C82	
9▼	5055J18	SAA	64	35	5	BTD	175n	500m	0.0	7.0	.80	2.0△	10m	.50	5	C	PN18bb	ML278
10▼	5155J18	SAA	64	35	5	BTD	175n	500m	0.0	7.0	.80	2.0§	10m	.50	5	C	PN18bb	ML278
11▼	6055J18	SAA	64	35	5	BTD	100n	500m	0.0	7.0	.80	2.0△	10m	.50	0	7	PN18bb	ML278
12▼	6056J24	SAA	64	35	5	BTD	100n	500m	0.0	7.0	.80	2.0△	10m	.50	0	7	PN24jo	ML276
13▼	6155J18	SAA	64	35	5	BTD	100n	500m	0.0	7.0	.80	2.0§	10m	.50	0	7	PN18bb	ML278
14▼	6156J24	SAA	64	35	5	BTD	100n	500m	0.0	7.0	2.0§	2.0△	10m	.50	0	7	PN24jo	ML276
15▼	6071J24	SAA	64	63	7	BTD	125n	500m	0.0	7.0	.80	2.0△	6.0	.50	0	7	PN24jq	ML276
16▼	6171J24	SAA	64	63	7	BTD	125n	500m	0.0	7.0	.80	2.0§	6.0	.50	0	7	PN24jq	ML276
17▼	6061J24	SAA	128	35	5	BTD	100n	500m	0.0	7.0	.80	2.0△	10m	.50	0	7	PN24jp	ML276
18▼	6062J24	SAA	128	35	5	BTD	100n	500m	0.0	7.0	.80	2.0△	10m	.50	0	7	PN24jp	ML276
19▼	6161J24	SAA	128	35	5	BTD	100n	500m	0.0	7.0	.80	2.0§	10m	.50	0	7	PN24jp	ML276
20▼	6162J24	SAA	128	35	5	BTD	100n	500m	0.0	7.0	.80	2.0§	10m	.50	0	7	PN24jp	ML276
21	MK34073N-3	SAA	128	40§	8	MNG	350n	330m	0.0	5.0	.80	2.0	3.3m	.40	0	7	B295	ML☑
22	MK34073P-3	SAA	128	40§	8	MNG	350n	330m	0.0	5.0	.80	2.0	3.3m	.40	0	7	B295	ML☑
23▼	6072J24	SAA	128	63	7	BTD	125n	500m	0.0	7.0	.80	2.0△	6.0m	.50	0	7	PN24jq	ML276
24▼	6172J24	SAA	128	63	7	BTD	125n	500m	0.0	7.0	.80	2.0§	6.0m	.50	0	7	PN24jq	ML276
25#	uPD474D02	SAC	64	7	9	MNX	315n	704m♦	5.0	12	.80	3.0§	1.7m	.50	1	7	C63	ML234
26#	uPD473D02	SAC	64	9	7	MNX	315n	704m♦	5.0	12	.80	3.0§	1.7m	.50	1	7	C62	ML234
27#	uPD473D04	SAC	64	9§	7	MNX	315n	704m♦	5.0	12	.80	3.0§	1.7m	.50	1	7	C62	ML234
28#	MSM575-01	SAC♦	64	35	7	MCX	1.5u†	2.5m♦†	0.0	5.0	.80	3.6	1.6m	.40	2	7	C61	ML118h
29#	MSM575-01A	SAC♦	64	35	7	MCX	4.5u	10m	0.0	5.0	.80	3.6	1.6m	.40	2	7	C61	ML258
30#	MSM575-02	SAC♦§	64	35	7	MCX	4.5u	10m	0.0	5.0	.80	3.6	1.6m	.40	2	7	C61	ML258
31	MCS2027	SAC	64	35	7	MPC		450m	12	5.0	.80	3.5	1.6m	.40	2	7		
32	3257-9-7C	SAC	64	35	7	MXX	1.0u	715m	12	5.0	.85	4.0	1.6m	.40	0	7	C18	ML52
33	2516N	SAC	64	48	8	MPX	600n	730m☑	12	5.0	.60	3.4§	1.6m	.50	0	7	C77	ML135
34#	FDR146BZ1	SAC	64	80	10	MPX	725n	300m†	28	0.0	-9.0	-2.0	1.6m	.40	5	8	E13	ML118b
35#	FDR146Z1	SAC	64	80	10	MPX	725n	300m†	28	0.0	-9.0	-2.0	1.6m	.40	5	8	E13	ML41
36	NC6581L	SAC∅	128	63	9	MNA	400n	700m†	3.0	12	.80	3.0	1.6m	.40	0	7	C51	ML30g
37	NC6583L	SAC§	128	63	9	MNA	400n	700m†	3.0	12	.80	3.0	1.6m	.40	0	7	C51	ML150c
38▼	NCM6581L	SAC*∅	128	64	10	MNX	400n	700m†	3.0	12	.80	3.0	1.6m	.40	0	7	C51	ML434
39▼	NCM6581P	SAC*∅	128	64	10	MNX	400n	700m†	3.0	12	.80	3.0	1.6m	.40	0	7	C51	ML434
40	MCM6581L	SAC∅	128	64§	9	MNX	400n	800	3.0	12	.80	4.0	1.6m	.40	0	7	C51	ML150
41	MCM6581P	SAC∅	128	64§	9	MNX	400n	800m	3.0	12	.80	4.0	1.6m	.40	0	7	C51	ML39
42	MCM6583L	SAC§	128	64§	9	MNX	400n	800	3.0	12	.80	4.0	1.6m	.40	0	7	C51	ML150
43	MCM6583P	SAC§	128	64§	9	MNX	400n	800m	3.0	12	.80	4.0	1.6m	.40	0	7	C51	ML39
44	3260-91-7R	SAR	64	9	7	MXG		560m†	0.0	5.0	.80	4.0	2.4m	.40	0	7	PN24fk	ML103
45	3260-92-7R	SAR	64	9	7	MXG		560m†	0.0	5.0	.80	4.0	2.4m	.40	0	7	PN24fk	ML103
46	5055J	SAR	64	35	5	BTD	175n	850m	0.0	5.0	.80	2.0△	8.0m	.50	5	C	C59	ML278
47	5155J	SAR	64	35	5	BTD	175n	900m	0.0	5.0	.80	2.0§	8.0m	.50	5	C	C59	ML278
48	RO3-2513	SAR	64	35	5	MNI	450n	165m	0.0	5.0	.65	2.2§	1.6m	.45	0	7	C60	ML324
49	3258-9-7K	SAR	64	35	5	MXG	600n	400m†	12	5.0	.85	2.0			0	7	C19	ML57
50	2513IXCM2140	SAR	64	40	5	MPG	500n	730m	12	5.0	.60	3.4§	1.6m	.40	0	7	C15	ML88f
51	DM76S64J	SAR	64	63	1	BTD	55n△†	770m	0.0	5.0	.80	2.0§	16m	.45	5	C	C75	ML127k
52	DM86S64J	SAR	64	63	1	BTD	45n△†	735m	0.0	5.0	.80	2.0§	16m	.45	0	7	C75	ML127k
53	DM86S64N	SAR	64	63	1	BTD	45n△†	735m	0.0	5.0	.80	2.0§	16m	.45	0	7	C75	ML178
54	DM8678J	SAR	64	63	1	BTX	50n†△	725m	0.0	5.0	.80	2.0§	16m	.45	0	7	C75	ML127f
55	DM8678N	SAR	64	63	1	BTX	50n†△	725m	0.0	5.0	.80	2.0§	16m	.45	0	7	C75	ML178
56	N8228ICD162	SAR§	64	64	4	BTX	70n	850m	0.0	5.0	.85	2.0	11m	.50	0	7	B29	ML107
57#	FDR146BZ2	SAR	128	35	10	MPX	725n	300m†	28	0.0	-9.0	-2.0	1.6m	.40	5	8	E13	ML118b
58#	FDR146Z2	SAR	128	35	10	MPX	725n	300m†	28	0.0	-9.0	-2.0	1.6m	.40	5	8	E13	ML41
59	MCM6674L	SAR	128	35	5	MNG	350n	650m	0.0	5.0	.80	2.0	1.6m	.40	0	7	C64	ML370
60	MCM6674P	SAR	128	35	5	MNG	350n	650m	0.0	5.0	.80	2.0	1.6m	.40	0	7	C64	ML265
61#	uPD472D01	SAR§	128	35	5	MNX	315n	400m†	5.0	12	.80	3.0	1.6m	.40	0	7	C71	ML238
62	DM76S128J	SAR	128	63	1	BTD	55n†△	770m	0.0	5.0	.80	2.0§	16m	.45	5	C	C75aa	ML127k
63	DM86S128J	SAR	128	63	1	BTD	45n†△	735m	0.0	5.0	.80	2.0§	16m	.45	0	7	C75a	ML127k
64	DM86S128N	SAR	128	63	1	BTD	45n†△	735m	0.0	5.0	.80	2.0§	16m	.45	0	7	C75a	ML178
65	NC6571L	SAR∅	128	63	7	MNA	500n	600m†	3.0	12	.80	3.0	1.6m	.40	0	7	C50	ML150c
66	NC6572L	SAR∅	128	63	7	MNA	500n	600m†	3.0	12	.80	3.0	1.6m	.40	0	7	C50	ML30g
67	NC6573L	SAR§	128	63	7	MNA	500n	600m†	3.0	12	.80	3.0	1.6m	.40	0	7	C67	ML150c
68	NC6574L	SAR	128	63	7	MNA	500n	600m†	3.0	12	.80	3.0	1.6m	.40	0	7	C67	ML150c
69	NC6575L	SAR	128	63	7	MNA	500n	600m†	3.0	12	.80	3.0	1.6m	.40	0	7	C67	ML150c
70	NC6576L	SAR	128	63	7	MNA	500n	600m†	3.0	12	.80	3.0	1.6m	.40	0	7	C67	ML150c
71	MCM66710C	SAR∅△	128	63	7	MNG	350n	440m	0.0	5.0	.80	2.0	1.6m	.40	0	7	C72	ML319
72	MCM66710P	SAR∅△	128	63	7	MNG	350n	440m	0.0	5.0	.80	2.0	1.6m	.40	0	7	C72	ML39
73	MCM66714C	SAR∅△	128	63	7	MNG	350n	440m	0.0	5.0	.80	2.0	1.6m	.40	0	7	C72	ML319
74	MCM66714P	SAR∅△	128	63	7	MNG	350n	440m	0.0	5.0	.80	2.0	1.6m	.40	0	7	C72	ML39
75	MCM66720C	SAR∅	128	63	7	MNG	350n	440m	0.0	5.0	.80	2.0	1.6m	.40	0	7	C72	ML319
76	MCM66720P	SAR∅	128	63	7	MNG	350n	440m	0.0	5.0	.80	2.0	1.6m	.40	0	7	C72	ML39
77	MCM66730C	SAR§	128	63	7	MNG	350n	440m	0.0	5.0	.80	2.0	1.6m	.40	0	7	C72	ML319
78	MCM66730P	SAR§	128	63	7	MNG	350n	440m	0.0	5.0	.80	2.0	1.6m	.40	0	7	C72	ML39
79	MCM66734C	SAR§	128	63	7	MNG	350n	440m	0.0	5.0	.80	2.0	1.6m	.40	0	7	C72	ML319
80	MCM66734P	SAR§	128	63	7	MNG	350n	440m	0.0	5.0	.80	2.0	1.6m	.40	0	7	C72	ML39
81	MCM66740C	SAR*△	128	63	7	MNG	350n	440m	0.0	5.0	.80	2.0	1.6m	.40	0	7	C72	ML319
82	MCM66740P	SAR*△	128	63	7	MNG	350n	440m	0.0	5.0	.80	2.0	1.6m	.40	0	7	C72	ML39
83	MCM66750C	SAR#△	128	63	7	MNG	350n	440m	0.0	5.0	.80	2.0	1.6m	.40	0	7	C72	ML319
84	MCM66750P	SAR#△	128	63	7	MNG	350n	440m	0.0	5.0	.80	2.0	1.6m	.40	0	7	C72	ML39
85	MCM66751C	SAR#△	128	63	7	MNG	350n	440m	0.0	5.0	.80	2.0	1.6m	.40	0	7	C72	ML319
86	MCM66751P	SAR#△	128	63	7	MNG	350n	440m	0.0	5.0	.80	2.0	1.6m	.40	0	7	C72	ML39
87	MCM66760C	SAR♦△	128	63	7	MNG	350n	440m	0.0	5.0	.80	2.0	1.6m	.40	0	7	C72	ML319
88	MCM66760P	SAR♦△	128	63	7	MNG	350n	440m	0.0	5.0	.80	2.0	1.6m	.40	0	7	C72	ML39
89	MCM66770C	SAR♦△	128	63	7	MNG	350n	440m	0.0	5.0	.80	2.0	1.6m	.40	0	7	C72	ML319
90	MCM66770P	SAR♦△	128	63	7	MNG	350n	440m	0.0	5.0	.80	2.0	1.6m	.40	0	7	C72	ML39
91	MCM66780C	SAR♦△	128	63	7	MNG	350n	440m	0.0	5.0	.80	2.0	1.6m	.40	0	7	C72	ML319
92	MCM66780P	SAR♦△	128	63	7	MNG	350n	440m	0.0	5.0	.80	2.0	1.6m	.40	0	7	C72	ML39
93	MCM66790C	SAR♦△	128	63	7	MNG	350n	440m	0.0	5.0	.80	2.0	1.6m	.40	0	7	C72	ML319
94	MCM66790P	SAR♦△	128	63	7	MNG	350n	440m	0.0	5.0	.80	2.0	1.6m	.40	0	7	C72	ML39
95	CG4103	SAS♦	64	35	7	MNG	1.2k	400m	12	12	1.5	11			2	8	C28	ML☑
96#	MCH-01	SAS	128	8		MNX	450n	1.0 ☑	0.0	5.0	.80	2.2§	10u△	4.0	0	7	PN24il	14
97	CRT7004A	SAS♦	128	77		MNG	400n†	500m†	0.0	5.0	.80	2.0			0	7	C81	ML☑
98	CRT7004B	SAS♦	128	77		MNG	400n†	500m†	0.0	5.0	.80	2.0			0	7	C81	ML☑
99	CRT7004C	SAS♦	128	77		MNG	400n†	500m†	0.0	5.0	.80	2.0			0	7	C81	ML☑
100#	M200M1AA	SBC	16 ☑	64	8	MPX	4.0u	150m†	27	0.0	-2.0	-9.0	1.0u△	20	0	7	B57	ML59
101#	M200M1XX	SBC	16	64	8	MPX	4.0u	150m†	27	0.0	-2.0	-9.0	1.0u	20	0	7	B57	ML59
102▼	NCM6583L	SBC*§	128	64	10	MNX	400n	700m†	3.0	12	.80	3.0	1.6m	.40	0	7	C82	ML150c
103▼	NCM6583P	SBC*§	128	64	10	MNX	400n	700m†	3.0	12	.80	3.0	1.6m	.40	0	7	C82	ML150c
104♦#	MSL9661AS	SBS	64	16§	16	BT			0.0	5.0	.80	2.4	10u△	4.75	0	7	C85	ML195a
105♦#	MSL9662RS	SBS	64	16	16	BT			0.0	5.0	.80	2.4	10u△	4.75	0	7	C83	
106♦#	MSL9663RS	SBS	64	16	16	BT			0.0	5.0	.80	2.4	10u△	4.75	0	7	C83	
107♦#	MSL9664RS	SBS	64	16	16	BT			0.0	5.0	.80	2.4	10u△	4.75	0	7	C84	ML200
108#	MSL9665RS	SBS	64	16	16	BT			0.0	5.0	.80	2.4	10u△	4.75	0	7		ML200
109#	uPD473D	SCA§	64	63	7	MNX	315n	400m†	5.0	12	.80	3.0	1.6m	.40	0	7	C62	ML238
110▼	5290J24	SCA	128	63	7	BTD	150n	500m	0.0	7.0	.80	2.0△	6.0m	.50	5	C	PN24jq	ML276

SYMBOLS AND CODES EXPLAINED IN INTERPRETER

4. CHARACTER GENERATORS

IN ORDER OF (1)USE CODE(2)No.CHARACTERS (3)NO.BITS/CHAR(4)STRUCT(5)ACCESS(6)TYPE NO.

LINE No.	6 TYPE No.	1 USE CODE	2 No. CHARACTERS	3 BITS PER CHAR.	4 No. OUTPUTS	5 STRUCTURE CODE	MAX ACCESS TIME (s)	MAX OPER. POWER DISS. (W)	RATED POWER SUP. SPAN NEG. (V)	RATED POWER SUP. SPAN POS. (V)	INPUT LOGIC LEVELS MAX '0' (V)	INPUT LOGIC LEVELS MIN '1' (V)	MIN OUTPUT SINK CURRENT (A)	MIN OUTPUT SINK CURRENT @ OUT (V)	OPER. TEMP. RANGE CODE -	OPER. TEMP. RANGE CODE +	DRAWINGS LOGIC/ BLOCK	DRAWINGS OUTLINE
1▼	5291J24	SCA	128	63	7	BTD	150n	500m	0.0	7.0	.80	2.0§	6.0m	.50	5	C	PN24jq	ML276
2▼	6290J24	SCA	128	63	7	BTD	125n	500m	0.0	7.0	.80	2.0△	6.0m	.50	0	7	PN24jq	ML276
3▼	5292J24	SCA	128	81	9	BTD	150n	500m	0.0	7.0	.80	2.0△	6.0m	.50	5	C	PN24jr	ML276
4▼	5293J24	SCA	128	81	9	BTD	150n	500m	0.0	7.0	.80	2.0§	6.0m	.50	5	C	PN24jr	ML276
5▼	6291J24	SCA	128	81	9	BTD	125n	500m	0.0	7.0	.80	2.0§	6.0m	.50	0	7	PN24jq	ML276
6▼	6292J24	SCA	128	81	9	BTD	125n	500m	0.0	7.0	.80	2.0△	6.0m	.50	0	7	PN24jr	ML276
7▼	6293J24	SCA	128	81	9	BTD	125n	500m	0.0	7.0	.80	2.0§	6.0m	.50	0	7	PN24jr	ML276
8#	uPD474D01	SCC	64	7	9	MNX	315n	704m♦	5.0	12	.80	3.0§	1.7m	.50	1	7	C63	ML234
9#	uPD473D03	SCC	64	9§	7	MNX	315n	704m♦	5.0	12	.80	3.0§	1.7m	.50	1	7	C62	ML234
10	MM4241ABLJ	SCC	64	48	8	MPA	900n	630m	12	5.0	2.0	4.0	1.6m	.40	5	C	C42	ML200
11	MM5241ABLJ	SCC	64	48	8	MPA	900n	630m	12	5.0	2.0	4.0	1.6m	.40	0	7	C42	ML200
12	MM5241ABLN	SCC	64	48	8	MPA	900n	630m	12	5.0	2.0	4.0	1.6m	.40	0	7	C42	ML72f
13#	uPD474D	SCC§	64	63	9	MNX	315n	400m†	5.0	12	.80	3.0	1.6m	.40	0	7	C63	ML238
14	NC6580L	SCC	128	63	9	MNA	400n	700m†	3.0	12	.80	3.0	1.6m	.40	0	7	C51	ML30g
15	MCM6580L	SCC	128	64§	9	MNX	400n	800	3.0	12	.80	4.0	1.6m	.40	0	7	C51	ML150
16	MCM6580P	SCC	128	64§	9	MNX	400n	800m	3.0	12	.80	4.0	1.6m	.40	0	7	C51	ML39
17	3255-9-7K	SCN	16	35	7	MPG	400n	400m	12	5.0	.85	4.0	2.4m	.40	0	7	C17	ML57
18	3256-9-7K	SCN	16	35	7	MPG	400n	400m	12	5.0	.85	4.0	2.4m	.40	0	7	C17	ML57
19#	uPD473D01	SCR	64	9	7	MNX	315n	704m♦	5.0	12	.80	3.0§	1.7m	.50	1	7	C62	ML234
20	2513IXCMXXXX#1	SCR	64	35	5	MPG	500n	730m	12	5.0	.60	3.4§	1.6m	.40	0	7	C15	ML88f
21	2513IXCMXXXX#2	SCR	64	40	5	MPG	500n	730m	12	5.0	.60	3.4§	1.6m	.40	0	7	C15	ML88f
22	MCM6670L	SCR	128	35	5	MNG	350n	650m	0.0	5.0	.80	2.0	1.6m	.40	0	7	C64	ML370
23	MCM6670P	SCR	128	35	5	MNG	350n	650m	0.0	5.0	.80	2.0	1.6m	.40	0	7	C64	ML265
24	MM52116FDWD	SCR	128	35	8	MNG	450n	500m	0.0	5.0	.80	2.0§	3.2m	.40	0	7	C80	ML184a
25	MM52116FDWN	SCR	128	35	8	MNG	450n	500m	0.0	5.0	.80	2.0§	3.2m	.40	0	7	C80	ML72f
26	NC6570L	SCR	128	63	7	MNA	500n	600m†	3.0	12	.80	3.0	1.6m	.40	0	7	C50	ML150c
27	MCM66700C	SCR△	128	63	7	MNG	350n	440m	0.0	5.0	.80	2.0	1.6m	.40	0	7	C72	ML319
28	MCM66700P	SCR△	128	63	7	MNG	350n	440m	0.0	5.0	.80	2.0	1.6m	.40	0	7	C72	ML39
29	MM52116FDXD	SCR	128	63	8	MNG	450n	500m	0.0	5.0	.80	2.0§	3.2m	.40	0	7	C80	ML184a
30	MM52116FDXN	SCR	128	63	8	MNG	450n	500m	0.0	5.0	.80	2.0§	3.2m	.40	0	7	C80	ML72f
31♦	2670I	SCS♦△	128	91	10		300n		0.0	5.0	.80	2.0	10u△	4.0	0	7	C86	ML☑
32♦	2670N	SCS♦△	128	91	10		300n		0.0	5.0	.80	2.0	10u△	4.0	0	7	C86	ML☑
33	MM4240ABZJ	SER	64	40	5	MPX	500nØ	504mØ	12	12	10*	4.0#			5	C	PN24fh	ML133a
34	MM4240AEJ	SER	64	40	5	MPX	500nØ	504mØ	12	12	10*	4.0#			5	C	C14a	ML133a
35	MM5240ABZN	SER	64	40	5	MPX	500nØ	504mØ	12	12	10*	4.0#			2	7	PN24fh	ML183
36	MM5240AEN	SER	64	40	5	MPX	500nØ	504mØ	12	12	10*	4.0#			2	7	C14a	ML183
37	MM4240AAJ	SHR	64	40	7	MPX	500nØ	504mØ	12	12	10*	4.0#			5	C	C14a	ML133a
38	MM4240ABUJ	SHR	64	40	7	MPX	500nØ	504mØ	12	12	10*	4.0#			5	C	PN24fh	ML133a
39	MM5240AAJ	SHR	64	40	7	MPX	500nØ	504mØ	12	12	10*	4.0#			2	7	C14a	ML183
40	MM5240ABUJ	SHR	64	40	7	MPX	500nØ	504mØ	12	12	10*	4.0#			2	7	PN24fh	ML133a
41#	T154D1A%	SNC	6 ☑	40	8	BTX	50nØ	400m♦	0.0	5.0	.90	2.0	10m	.45	0	7	PN16br	ML60
42#	T154D1B%	SNC	6 ☑	40	8	BTX	50nØ	400m♦	0.0	5.0	.90	2.0	10m	.45	0	7	PN16br	ML60
43	HEPC3802P-RT	SNS	12	8	8	BTX	45n	240m†	0.0	5.0	.90	2.0	20m	5.25	0	7	C26	ML38
44	MC4039P	SNS	12	8	8	BTX	45n♦	240m†	0.0	5.0	.45%		20m	.45	0	7	C26	ML40
45	MCM66734L	SPR§	128	63	7	MNG	350n	525m	0.0	5.0	.80	2.0	1.6m	.40	0	7	C72	ML150a
46▼	NCM6580L	SXC△	128	64	10	MNX	400n	700m†	3.0	12	.80	3.0	1.6m	.40	0	7	C51	ML434
47▼	NCM6580P	SXC△	128	64	10	MNX	400n	700m†	3.0	12	.80	3.0	1.6m	.40	0	7	C51	ML434
48▼	NCM6571L	SXR	128	8192	7	MNX	500n	600m	3.0	12	.80	3.0	1.6m	.40	0	7	C83	ML150c
49▼	NCM6571P	SXR	128	8192	7	MNX	500n	600m	3.0	12	.80	3.0	1.6m	.40	0	7	C83	ML150c
50▼	NCM6572L	SXR	128	8192	7	MNX	500n	600m	3.0	12	.80	3.0	1.6m	.40	0	7	C83	ML150c
51▼	NCM6573L	SXR	128	8192	7	MNX	500n	600m	3.0	12	.80	3.0	1.6m	.40	0	7	C83	ML150c
52▼	NCM6573P	SXR	128	8192	7	MNX	500n	600m	3.0	12	.80	3.0	1.6m	.40	0	7	C83	ML150c
53▼	NCM6574L	SXR	128	8192	7	MNX	500n	600m†	3.0	12	.80	3.0	1.6m	.40	0	7	C83	ML150c
54▼	NCM6574P	SXR	128	8192	7	MNX	500n	600m†	3.0	12	.80	3.0	1.6m	.40	0	7	C83	ML150c
55▼	NCM6575L	SXR	128	8192	7	MNX	500n	600m†	3.0	12	.80	3.0	1.6m	.40	0	7	C83	ML150c
56▼	NCM6575P	SXR	128	8192	7	MNX	500n	600m†	3.0	12	.80	3.0	1.6m	.40	0	7	C83	ML150c
57▼	NCM6576L	SXR	128	8192	7	MNX	500n	600m†	3.0	12	.80	3.0	1.6m	.40	0	7	C83	ML150c
58▼	NCM6576P	SXR	128	8192	7	MNX	500n	600m†	3.0	12	.80	3.0	1.6m	.40	0	7	C83	ML150c
59#	MSL9660AS	SXS	64	16	16	BI	2.0u	100m	0.0	7.0	.80	2.4	1.6m	.50	0	7		
60#	MSL9650AS	SXS	64	35	35	BI	2.0u*	100m	0.0	7.0	.80	2.0	1.6m	.50	0	7		
61#	MSL9652A	SXS	64	35	35	BT			0.0	5.0	.80	2.0	10u△	4.75	0	7		
62#	MSM3761AS	SXS	128	63	9	MNG	1.0ut	500m	0.0	7.0	.65	2.2	1.6m	.45	2	7		

SYMBOLS AND CODES EXPLAINED IN INTERPRETER

6. CODE CONVERTERS

IN ORDER OF(1)FROM CODE(2)TO CODE(3)No.WORDS (4)No.INPUT BITS(5)No.OUTPUT BITS(6)TYPE No.

LINE No.	6 TYPE No.	CONVERSION CODE 1 FRM	CONVERSION CODE 2 TO	3 No. WORDS	No. CODE BITS 4 IN	No. CODE BITS 5 OUT	MODE	STRUCTURE CODE	MAX ACCESS TIME (s)	MAX OPER. POWER DISS. (W)	RATED POWER SUP. SPAN NEG. (V)	RATED POWER SUP. SPAN POS. (V)	INPUT LOGIC LEVELS MAX '0' (V)	INPUT LOGIC LEVELS MIN '1' (V)	MIN OUTPUT SINK CURRENT (A)	MIN OUTPUT SINK CURRENT @ OUT (V)	OPER. TEMP. RANGE CODE -	OPER. TEMP. RANGE CODE +	DRAWINGS LOGIC/ BLOCK	DRAWINGS OUTLINE
1▼	NCM6561L#3	1%	2	128♦				MNX	350n	600m†	3.0	12	.80	3.0	1.6m	.40	0	7	B121	ML434
2▼	NCM6561P#3	1%	2	128♦				MNX	350n	600m†	3.0	12	.80	3.0	1.6m	.40	0	7	B121	ML434
3	MM4221RRJ	1	2	128	7	8	S	MPX	950nØ	204mØ	12	5.0	3.0*	.80#			5	C	B26a	ML133a
4	MCM6561L#6	1	2	128♦	8	8	S	MNA	350n	1.0	3.0	12	.40%	3.0	1.6m	.40	0	7	B121	ML150a
5	MCM6561P#6	1	2	128♦	8	8	S	MNA	350n	1.0	3.0	12	.40%	3.0	1.6m	.40	0	7	B121	ML39
6	MCM6562L#6	1	2	128♦	8	8	S	MNA	350n	1.0	3.0	12	.40%	3.0	1.6m	.40	0	7	B121	ML150a
7	MCM6562P#6	1	2	128♦	8	8	S	MNA	350n	1.0	3.0	12	.40%	3.0	1.6m	.40	0	7	B121	ML39
8	NC6561L#6	1%	2	128♦	10	8	S	MNA	350n	600m†	3.0	12	.80	3.0	1.6m	.40	0	7	B121	ML30g
9	MCM6591L#3	1%	2	128♦	11	8	S	MNG	800n	405m	3.0	12	.80	3.0§	1.6m	.40	0	7	B144	ML150a
10▼	NC6591#6	1%	2	128♦	8	8	S	MNX	350n	600m†	3.0	12	.80	3.0§	1.6m	.40	0	7	B144	
11	N8224CB180	1	2	256	7	8	S	BTX	50n$Ø	400mØ	0.0	5.0	.40%		9.6m	.40	0	7	B67	
12	N8204YCB505	1	2	256	8	8	S	BTX	75n	850m	0.0	5.0	.85*	2.0†§	9.6m	.50	0	7	E1a	ML47a
13	N8205YCB175#1	1%	2	512	8	8	S	BTX	75n	850m	0.0	5.0	.85*	2.0†§	9.6m	.50	0	7	E1	ML47a
14#	FDR131Z1#1	1%	2	512	9	8	D	MPX	1.5u	100m†	14	0.0	-9.0	-2.0			0	7	B36	ML41
15▼	NCM6561L#2	1%	3	128♦				MNX	350n	600m†	3.0	12	.80	3.0	1.6m	.40	0	7	B121	ML434
16▼	NCM6561P#2	1%	3	128♦				MNX	350n	600m†	3.0	12	.80	3.0	1.6m	.40	0	7	B121	ML434
17	MCM6561L#2	1	3	128♦	8	8	S	MNA	350n	1.0	3.0	12	.40%	3.0	1.6m	.40	0	7	B121	ML150a
18	MCM6561P#2	1	3	128♦	8	8	S	MNA	350n	1.0	3.0	12	.40%	3.0	1.6m	.40	0	7	B121	ML39
19	MCM6562L#2	1	3	128♦	8	8	S	MNA	350n	1.0	3.0	12	.40%	3.0	1.6m	.40	0	7	B121	ML150a
20	MCM6562P#2	1	3	128♦	8	8	S	MNA	350n	1.0	3.0	12	.40%	3.0	1.6m	.40	0	7	B121	ML39
21	MCM6591L#1	1%	3	128♦	11	8	S	MNG	800n	405m	3.0	12	.80	3.0§	1.6m	.40	0	7	B144	ML150a
22▼	NC6591#2	1%	3	128♦	8	8	S	MNX	350n	600m†	3.0	12	.80	3.0§	1.6m	.40	0	7	B144	
23	MM4230KP2J	1	3	256	7	8	S	MPX	725nØ	960mØ	12	12	10*	4.0#			5	C	B26	ML133a
24	MM5230KP2J	1	3	256	7	8	S	MPX	725nØ	960mØ	12	12	10*	4.0#			0	7	B26	ML133a
25	MM5230KP2N	1	3	256	7	8	S	MPX	725nØ	960mØ	12	12	10*	4.0#			0	7	B26	ML183
26#	FDR126Z1#1	1%	3	256	8	10	D	MPX	1.0u	100m†	14	0.0	-9.0	-2.0			5	8	B35	ML41
27	MM4230KPJ	1	3	256	7	8	S	MPX	725nØ	960mØ	12	12	10*	4.0#			5	C	B26	ML133a
28	MM5230KPN	1	3	256	7	8	S	MPX	725nØ	960mØ	12	12	10*	4.0#			0	7	B26	ML183
29▼	NCM6561L#1	1%	6	128♦			S	MNX	350n	600m†	3.0	12	.80	3.0	1.6m	.40	0	7	B121	ML434
30▼	NCM6561P#1	1%	6	128♦				MNX	350n	600m†	3.0	12	.80	3.0	1.6m	.40	0	7	B121	ML434
31	MM4220AEJ	1	6	128	7	8	S	MPX	650nØ	300mØ	12	12	10*	4.0#			5	C	B26a	ML133a
32	MM5220AEJ	1	6	128	7	8	S	MPX	650nØ	300mØ	12	12	10*	4.0#			2	7	B26a	ML133a
33	MM5220AEN	1	6	128	7	8	S	MPX	650nØ	300mØ	12	12	10*	4.0#			2	7	B26a	ML183
34	MCM6561L#4	1	6	128♦	8	8	S	MNA	350n	1.0	3.0	12	.40%	3.0	1.6m	.40	0	7	B121	ML150a
35	MCM6561P#4	1	6	128♦	8	8	S	MNA	350n	1.0	3.0	12	.40%	3.0	1.6m	.40	0	7	B121	ML39
36	MCM6562L#4	1	6	128♦	8	8	S	MNA	350n	1.0	3.0	12	.40%	3.0	1.6m	.40	0	7	B121	ML150a
37	MCM6562P#4	1	6	128♦	8	8	S	MNA	350n	1.0	3.0	12	.40%	3.0	1.6m	.40	0	7	B121	ML39
38	MCM6591L#4	1%	6	128♦	11	8	S	MNG	800n	405m	3.0	12	.80	3.0§	1.6m	.40	0	7	B144	ML150a
39▼	NC6591#4	1%	6	128♦	8	8	S	MNX	350n	600m†	3.0	12	.80	3.0§	1.6m	.40	0	7	B144	
40	MM4221RQJ#1	1%	11	128	6	8	S	MPX	950nØ	204mØ	12	5.0	3.0*	.80#			5	C	B26a	ML133a
41	MM5221RQJ#1	1%	11	128	6	8	S	MPX	950nØ	204mØ	12	5.0	3.0*	.80#			0	7	B26a	ML133a
42	MM4221TMJ	1%	11	128	6	8	S	MPX	950nØ	204mØ	12	5.0	3.0*	.80#			5	C	B26a	ML133a
43	MM5221TMJ	1%	11	128	6	8	S	MPX	950nØ	204mØ	12	5.0	3.0*	.80#			0	7	B26a	ML133a
44	MCM6591L#5	2%	1	128♦	11	8	S	MNG	800n	405m	3.0	12	.80	3.0§	1.6m	.40	0	7	B144	ML150a
45▼	NCM6561L#6	2%	1	256♦				MNX	350n	600m†	3.0	12	.80	3.0	1.6m	.40	0	7	B121	ML434
46	MCM6561L#5	2	1	256♦	8	8	S	MNA	350n	1.0	3.0	12	.40%	3.0	1.6m	.40	0	7	B121	ML150a
47	MCM6561P#5	2	1	256♦	8	8	S	MNA	350n	1.0	3.0	12	.40%	3.0	1.6m	.40	0	7	B121	ML39
48	MCM6562L#5	2	1	256♦	8	8	S	MNA	350n	1.0	3.0	12	.40%	3.0	1.6m	.40	0	7	B121	ML150a
49	MCM6562P#5	2	1	256♦	8	8	S	MNA	350n	1.0	3.0	12	.40%	3.0	1.6m	.40	0	7	B121	ML39
50	MM4231RP2J	2	1	256	8	8	S	MPX	950n	510mØ	12	5.0	3.0*	.80#			5	C	B26	ML133a
51	MM5231RP2J	2	1	256	8	8	S	MPX	950n	510mØ	12	5.0	3.0*	.80#			2	7	B26	ML133a
52	MM5231RP2N	2	1	256	8	8	S	MPX	950n	510mØ	12	5.0	3.0*	.80#			2	7	B26	ML183
53	N8204YCB504	2	1	256	8	8	S	BTX	75n	850m	0.0	5.0	.85*	2.0†§	9.6m	.50	0	7	E1a	ML47a
54	MM4231RPJ	2	1	256	8	8	S	MPX	950n	510mØ	12	5.0	3.0*	.80#			5	C	B26	ML133a
55	MM5231RPJ	2	1	256	8	8	S	MPX	950n	510mØ	12	5.0	3.0*	.80#			2	7	B26	ML133a
56	MM5231RPN	2	1	256	8	8	S	MPX	950n	510mØ	12	5.0	3.0*	.80#			2	7	B26	ML183
57▼	NC6591#5	2%	1	256♦	8	8	S	MNX	350n	600m†	3.0	12	.80	3.0§	1.6m	.40	0	7	B144	
58	N8205YCB175#2	2%	1	512	8	8	S	BTX	75n	850m	0.0	5.0	.85*	2.0†§	9.6m	.50	0	7	E1	ML47a
59#	FDR131Z1#2	2%	1	512	9	8	D	MPX	1.5u	100m†	14	0.0	-9.0	-2.0			0	7	B36	ML41
60▼	NCM6561L#4	3%	1	128♦				MNX	350n	600m†	3.0	12	.80	3.0	1.6m	.40	0	7	B121	ML434
61	MCM6561L#1	3	1	128♦	8	8	S	MNA	350n	1.0	3.0	12	.40%	3.0	1.6m	.40	0	7	B121	ML150a
62	MCM6561P#1	3	1	128♦	8	8	S	MNA	350n	1.0	3.0	12	.40%	3.0	1.6m	.40	0	7	B121	ML39
63	MCM6562L#1	3	1	128♦	8	8	S	MNA	350n	1.0	3.0	12	.40%	3.0	1.6m	.40	0	7	B121	ML150a
64	MCM6562P#1	3	1	128♦	8	8	S	MNA	350n	1.0	3.0	12	.40%	3.0	1.6m	.40	0	7	B121	ML39
65	MCM6591L#2	3%	1	128♦	11	8	S	MNG	800n	405m	3.0	12	.80	3.0§	1.6m	.40	0	7	B144	ML150a
66▼	NC6591#1	3%	1	128♦	8	8	S	MNX	350n	600m†	3.0	12	.80	3.0§	1.6m	.40	0	7	B144	
67#	FDR126Z1#2	3%	1	256	8	10	D	MPX	1.0u	100m†	14	0.0	-9.0	-2.0			5	8	B35	ML41
68#	FLH561-74184	4	5	40	6	6	S	BTC	40n$	500m	0.0	5.0	.80	2.0	12m	.40	0	7	PN16cx	ML☑
69#	FLH565-84184	4	5	40	6	6	S	BTC	40n$	500m	0.0	5.0	.80	2.0	12m	.40	2	8	PN16cx	ML☑
70	SN54184J	4	5	40	6	6	S	BTX	40n$Ø	500m	0.0	5.0	.80	2.0△	12m	.40	5	C	PN16cw	ML61a
71	SN54184W	4	5	40	6	6	S	BTX	40n$Ø	500m	0.0	5.0	.80	2.0△	12m	.40	5	C	PN16cw	MO004AG
72	SN74184J	4	5	40	6	6	S	BTX	40n$Ø	500m	0.0	5.0	.80	2.0△	12m	.40	0	7	PN16cw	ML61a
73	SN74184N	4	5	40	6	6	S	BTX	40n$Ø	500m	0.0	5.0	.80	2.0△	12m	.40	0	7	PN16cw	ML48
74#	FLH571-74185A	5	4	64	6	6	S	BTC	40n$	500m	0.0	5.0	.80	2.0	12m	.40	0	7	PN16cx	ML☑
75#	FLH575-84185A	5	4	64	6	6	S	BTC	40n$	500m	0.0	5.0	.80	2.0	12m	.40	2	8	PN16cx	ML☑
76	SN54185AJ	5	4	64	6	7	S	BTX	40n$Ø	500m	0.0	5.0	.80	2.0△	12m	.40	5	C	PN16cw	ML61a
77	SN54185AW	5	4	64	6	7	S	BTX	40n$Ø	500m	0.0	5.0	.80	2.0△	12m	.40	5	C	PN16cw	MO004AG
78	SN74185AJ	5	4	64	6	7	S	BTC	25n†	546m	0.0	5.25	.80	2.0	12m	.40	0	7	PN16cw	ML61a
79	SN74185AN	5	4	64	6	7	S	BTC	25n†	546m	0.0	5.25	.80	2.0	12m	.40	0	7	PN16cw	ML48
80	MCM6591L#6	6%	1	128♦	11	8	S	MNG	800n	405m	3.0	12	.80	3.0§	1.6m	.40	0	7	B144	ML150a
81▼	NCM6561P#5	6%	1	256♦				MNX	350n	600m†	3.0	12	.80	3.0	1.6m	.40	0	7	B121	ML434
82	MCM6561L#3	6	1	256♦	8	8	S	MNA	350n	1.0	3.0	12	.40%	3.0	1.6m	.40	0	7	B121	ML150a
83	MCM6561P#3	6	1	256♦	8	8	S	MNA	350n	1.0	3.0	12	.40%	3.0	1.6m	.40	0	7	B121	ML39
84	MCM6562L#3	6	1	256♦	8	8	S	MNA	350n	1.0	3.0	12	.40%	3.0	1.6m	.40	0	7	B121	ML150a
85	MCM6562P#3	6	1	256♦	8	8	S	MNA	350n	1.0	3.0	12	.40%	3.0	1.6m	.40	0	7	B121	ML39
86	MM4230BO1J	6	1	256	12	8	S	MPX	725nØ	960mØ	12	12	10*	4.0#			5	C	B26	ML133a
87	MM5230BO1J	6	1	256	12	8	S	MPX	725nØ	960mØ	12	12	10*	4.0#			0	7	B26	ML133a
88	MM5230BO1N	6	1	256	12	8	S	MPX	725nØ	960mØ	12	12	10*	4.0#			0	7	B26	ML183
89	MM4230BOJ	6	1	256	12	8	S	MPX	725nØ	960mØ	12	12	10*	4.0#			5	C	B26	ML133a
90	MM5230BOJ	6	1	256	12	8	S	MPX	725nØ	960mØ	12	12	10*	4.0#			0	7	B26	ML133a
91	MM5230BON	6	1	256	12	8	S	MPX	725nØ	960mØ	12	12	10*	4.0#			0	7	B26	ML183
92▼	NC6591#3	6%	1	256♦	8	8	S	MNX	350n	600m†	3.0	12	.80	3.0§	1.6m	.40	0	7	B144	
93	AY5-2376	8	1	264*	88	9§	D	MPN		170m	12	5.0	.80	3.5	1.6m	.40	0	7	E17	ML246
94	KR2376	8	1	264	88	9	D	MPN		200m	12	5.0	.80	3.5	1.6m	.4	0	7	E17	ML246
95	AY5-3600	8	1	360*	90	10	D	MPN		204m	12	5.0	.80	3.5	1.6m	.40	0	7	PN16cw	ML246
96♦	KR3600	8	1	360	90	10	D	MPN		374m	12	5.0	.80	3.5	1.6m	.4	0	7	E26	ML246
97	AY5-3600-PRO	8	5	360*	90	9	D	MPN		204m	12	5.0	.80	3.5	1.6m	.40	0	7	PN16cw	ML246
98▼	KR3600-PRO	8	5	360	90	9	D	MPN		374m	12	5.0	.80	3.5	1.6m	.4	0	7	E26	ML246
99	AY3-4592	8	9	448*	128	10	D	MNX		318m	0.0	5.0	.80	2.2	1.6m	.50	0	7	E25	ML246
100	MM4221RQJ#2	11%	1	128	6	8	S	MPX	950nØ	204mØ	12	5.0	3.0*	.80#			5	C	B26a	ML133a
101	MM5221RQJ#2	11%	1	128	6	8	S	MPX	950nØ	204mØ	12	5.0	3.0*	.80#			0	7	B26a	ML133a
102	MM5221TMN	11%	1	128	6	8	S	MPX	950nØ	204mØ	12	5.0	3.0*	.80#			0	7	B26a	ML133a

7. SHIFT REGISTERS

IN ORDER OF(1)No.BITS/REG(2)No.REGISTERS (3)OP.CODE(4)MAX W/C FREQ(5)STRUCT(6)TYPE No

LINE No.	6 TYPE No.	ORGANIZATION 1 BITS PER REGISTER	ORGANIZATION 2 No. REGS	3 OPER. CODE	4 MAX WORST CASE FREQ. (Hz)	5 STRUC TURE CODE	MAX OPER. POWER DISS. (W)	RATED POWER SUP. SPAN NEG. (V)	RATED POWER SUP. SPAN POS. (V)	INPUT LOGIC LEVELS MAX '0' (V)	INPUT LOGIC LEVELS MIN '1' (V)	MAX PROP. DELAY (s)	MIN OUTPUT SINK CURRENT (A)	MIN OUTPUT SINK CURRENT @ OUT (V)	MIN CLOCK FREQ. (Hz)	OPER. TEMP. RANGE CODE -	OPER. TEMP. RANGE CODE +	DRAWINGS LOGIC/ BLOCK	DRAWINGS OUTLINE
1▼	CD40109BD		4*	SPS		MNG	500m	0.0	20	1.5	3.5§	850n	6.8m	1.5		5	C	F563	MO001ae
2▼	CD40109BE		4*	SPS		MNG	500m	0.0	20	1.5	3.5§	850n	6.8m	1.5		4	8	F563	MO001ac
3▼	CD40109BF		4*	SPS		MNG	500m	0.0	20	1.5	3.5§	850n	6.8m	1.5		5	C	F563	MO001ac
4▼	CD40109BH		4*	SPS		MNG	500m	0.0	20	1.5	3.5§	850n	6.8m	1.5		5	C	F563	CH15
5	SCL4006BC	1	18*	SSS§	6M	MCX	9.0m♦	0.0	15			700n	.07m	.40	1.2	5	C	F540	ML328
6	SCL4006BD	1	18*	SSS§	6M	MCX	9.0m♦	0.0	15			700n	.07m	.40	1.2	5	C	F540	ML328
7	SCL4006BE	1	18*	SSS§	6M	MCX	9.0m♦	0.0	15			700n	.07m	.40	1.2	4	8	F540	ML328
8	SCL4006BF	1	18*	SSS§	6M	MCX	9.0m♦	0.0	15			700n	.07m	.40	1.2	5	C	F540	FL28
9#	HCC40100BD	1	32*	SSS	3.0MØ△	MCX	200mØ△	0.0	15	4.0Ø	11	230n	3.4mØ	1.5		5	C	F465	ML302
10#	HCC40100BF	1	32*	SSS	3.0MØ△	MCX	200mØ△	0.0	15	4.0Ø	11	230n	3.4mØ	1.5		5	C	F465	ML300
11♦#	HCC40100BK	1	32*	SSS	3.0MØ△	MCX	200mØ△	0.0	15	4.0Ø	11	230n	3.4mØ	1.5		5	C	F465	FL79
12#	HCF40100BE	1	32*	SSS	3.0MØ△	MCX	200mØ△	0.0	15	4.0Ø	11	230n	3.4mØ	1.5		4	8	F465	ML301
13#	HCF40100BF	1	32*	SSS	3.0MØ△	MCX	200mØ△	0.0	15	4.0Ø	11	230n	3.4mØ	1.5		4	8	F465	ML300
14#	RC54170B	4			25nØ	BTX	750m♦	0.0	5.0	.80	2.0		16m	.40		5	C	A141	ML132
15#	RC54170F	4			25nØ	BTX	750m♦	0.0	5.0	.80	2.0		16m	.40		5	C	A141	ML61d
16#	RC54170W	4			25nØ	BTX	750m♦	0.0	5.0	.80	2.0		16m	.40		5	C	A141	FL25
17▼	CD40104BD#	4		PPD	8.0MΔ	MNG	500m	0.0	20	1.5	3.5§	440n	3.4m	1.5	12M#	5	C	F565	MO001ae
18▼	CD40104BE#	4		PPD	8.0MΔ	MNG	500m	0.0	20	1.5	3.5§	440n	3.4m	1.5	12M#	4	8	F565	MO001ac
19▼	CD40104BF#	4		PPD	8.0MΔ	MNG	500m	0.0	20	1.5	3.5§	440n	3.4m	1.5	12M#	5	C	F565	MO001ag
20▼	CD40194BE#	4		PPD	8.0MΔ	MNG	500m	0.0	20	1.5	3.5§	440n	3.4m	1.5	12M#	4	8	F566	MO001ac
21▼	CD40194BF#	4		PPD	8.0MΔ	MNG	500m	0.0	20	1.5	3.5§	440n	3.4m	1.5	12M#	5	C	F566	MO001ag
22▼#	HD74LS95B	4	1	BPS	25MΔ	BTD	110m	0.0	5.0	.80	2.0	27n			36M†	2	7	F402a	ML233
23▼#	HD74LS95BP	4	1	BPS	25MΔ	BTD	110m	0.0	5.0	.80	2.0	27n			36M†	2	7	F402a	ML261
24▼#	HD74LS194A	4	1	BPS	25MΔ	BTD	115m	0.0	5.0	.80	2.0	30n	8.0m#	.50	25M	2	7	F245	ML389m
25▼#	HD74LS194AP	4	1	BPS	25MΔ	BTD	115m	0.0	5.0	.80	2.0	30n	8.0m#	.50	25M	2	7	F245	ML394
26▼	CD40104BH#	4	1$	PPD	8.0MΔ	MNG	500m	0.0	20	1.5	3.5§	440n	3.4m	1.5	12M#	5	C	F565	CH16
27▼	CD40194BH#	4	1$	PPD	8.0MΔ	MNG	500m	0.0	20	1.5	3.5§	440n	3.4m	1.5	12M#	5	C	F566	CH16
28	I112	4	1	PPS			608m	0.0	8.0			55n†				0	7	F220	PLØ
29	370AJ	4	1	PPS		BDX	768m	0.0	15	6.5	5.0	750n	2.6m	1.8		3	7	F324	ML132a
30	370AL	4	1	PPS		BDX	768m	0.0	15	6.5	5.0	750n	2.6m	1.8		3	7	F324	ML127j
31	370BL	4	1	PPS		BDX	768m	0.0	15	6.5	5.0	750n	2.6m	1.8		5	C	F324	ML127j
32	370CJ	4	1	PPS		BDX	494m	0.0	12	6.5	5.0	750n	2.1m	1.5		3	8	F324	ML132a
33	370CL	4	1	PPS		BDX	494m	0.0	12	6.5	5.0	750n	2.1m	1.5		3	8	F324	ML127j
34	370ML	4	1	PPS		BDX	494m	0.0	12	6.5	5.0	750n	2.1m	1.5		5	C	F324	ML127j
35	SN15370J	4	1	PPS		BDX	405m♦	0.0	13.5	5.0	6.5	400n				3	8	F360	ML61a
36	SN15370N	4	1	PPS		BDX	405m♦	0.0	13.5	5.0	6.5	400n				3	8	F360	ML48
37	AM25LS2519DC	4	1	PPS		BTD		0.0	5.0	.80	2.0§		4.0m	.40		0	7	F431	ML248
38	AM25LS2519DM	4	1	PPS		BTD		0.0	5.0	.70	2.0§		4.0m	.40		5	C	F431	ML248
39	AM25LS2519FM	4	1	PPS		BTD		0.0	5.0	.70	2.0§		4.0m	.40		5	C	F431	FL44
40	AM25LS2519PC	4	1	PPS		BTD		0.0	5.0	.80	2.0§		4.0m	.40		0	7	F431	ML161a
41	AM25S08DC	4	1	PPS		BTD	480m♦	0.0	5.0	.80	2.0	17n	20m	.50		0	7	F285	ML127k
42	AM25S08DM	4	1	PPS		BTD	480m♦	0.0	5.0	.80	2.0	17n	20m	.50		5	C	F285	ML62c
43	AM25S08FM	4	1	PPS		BTD	480m♦	0.0	5.0	.80	2.0	17n	20m	.50		5	C	F285	FL33b
44	AM25S08PC	4	1	PPS		BTD	480m♦	0.0	5.0	.80	2.0	17n	20m	.50		0	7	F285	ML89a
45	AM25S09DC	4	1	PPS		BTD	600m♦	0.0	5.0	.80	2.0	17n	20m	.50		0	7	F295	ML127k
46	AM25S09DM	4	1	PPS		BTD	600m♦	0.0	5.0	.80	2.0	17n	20m	.50		5	C	F295	ML62c
47	AM25S09FM	4	1	PPS		BTD	600m♦	0.0	5.0	.80	2.0	17n	20m	.50		5	C	F295	FL33b
48	AM25S09PC	4	1	PPS		BTD	600m♦	0.0	5.0	.80	2.0	17n	20m	.50		0	7	F295	ML89a
49	AM25S10DC	4	1	PPS		BTD	425m♦	0.0	5.0	.80	2.0§	17n	20m	.50		0	7	F286	ML127k
50	AM25S10DM	4	1	PPS		BTD	425m♦	0.0	5.0	.80	2.0§	17n	20m	.50		5	C	F286	ML62c
51	AM25S10FM	4	1	PPS		BTD	425m♦	0.0	5.0	.80	2.0§	17n	20m	.50		5	C	F286	FL33b
52	AM25S10PC	4	1	PPS		BTD	425m♦	0.0	5.0	.80	2.0§	17n	20m	.50		0	7	F286	ML89a
53#	FJJ181-7475	4	1	PPS		BTX	160m†	0.0	5.0	.80	2.0	40n	16m	.40		0	7	F372	ML2m
54#	FLJ151-7475	4	1	PPS		BTX	265m	0.0	5.0	.80	2.0	40n	16m	.40		0	7	F366	ML2k
55#	FLJ155-8475	4	1	PPS		BTX	265m	0.0	5.0	.80	2.0	40n	16m	.40		2	8	F366	ML2k
56#	FLJ541-74175	4	1	PPS		BTX	127m	0.0	5.0	.80	2.0	15n§	16m	.40		0	7	F351	ML2k
57#	FLJ545-84175	4	1	PPS		BTX	127m	0.0	5.0	.80	2.0	15n§	16m	.40		2	8	F351	ML2k
58#	M53478P	4	1	PPS		BTX	420m	0.0	5.0	.80	2.0	46n	16m	.40		0	7	F273	ML86b
59	N8275B	4	1	PPS		BTX	265m	0.0	5.0	.40%	2.6§	16n				0	7	F388	MLØ
60	N8275E	4	1	PPS		BTX	265m	0.0	5.0	.40%	2.6§	16n				0	7	F388	ML61
61	N8275R	4	1	PPS		BTX	265m	0.0	5.0	.40%	2.6§	16n				0	7	F388	FL25
62	S8275B	4	1	PPS		BTX	265m	0.0	5.0	.40%	2.6§	16n				5	C	F388	MLØ
63	S8275E	4	1	PPS		BTX	265m	0.0	5.0	.40%	2.6§	16n				5	C	F388	ML61
64	S8275R	4	1	PPS		BTX	265m	0.0	5.0	.40%	2.6§	16n				5	C	F388	FL25
65	SN54278J	4	1	PPS		BTX	400m	0.0	5.0	.80	2.0	46nØ	16m	.40		5	C	F273	ML66a
66	SN54278W	4	1	PPS		BTX	400m	0.0	5.0	.80	2.0	46nØ	16m	.40		5	C	F273	MO004AA
67	SN74278J	4	1	PPS		BTX	400m	0.0	5.0	.80	2.0	46nØ	16m	.40		0	7	F273	ML66a
68	SN74278N	4	1	PPS		BTX	400m	0.0	5.0	.80	2.0	46nØ	16m	.40		0	7	F273	ML71
69▼#	uPB2918D	4	1	PPS		BTX	650m	0.0	5.0	.80	2.0	13n	20m	.50		0	7		ML87c
70	340194DC	4	1	PPS		MCX	10m♦	0.0	10	3.0	7.0	65nØ	1.2m	.50		4	8	F245	ML127s
71	340194DM	4	1	PPS		MCX	800u♦	0.0	10	3.0	7.0	65nØ	1.2m	.50		5	C	F245	ML127s
72	340194FC	4	1	PPS		MCX	10m♦	0.0	10	3.0	7.0	65nØ	1.2m	.50		4	8	F245	FL14g
73	340194FM	4	1	PPS		MCX	800u♦	0.0	10	3.0	7.0	65nØ	1.2m	.50		5	C	F245	FL14g
74	340194PC	4	1	PPS		MCX	10m♦	0.0	10	3.0	7.0	65nØ	1.2m	.50		4	8	F245	ML170
75	340195DC	4	1	PPS		MCX	10m♦	0.0	10	3.0	7.0	65nØ	1.2m	.50		4	8	F192	ML127s
76	340195DM	4	1	PPS		MCX	800u♦	0.0	10	3.0	7.0	65nØ	1.2m	.50		5	C	F192	ML127s
77	340195FC	4	1	PPS		MCX	10m♦	0.0	10	3.0	7.0	65nØ	1.2m	.50		4	8	F192	FL14g
78	340195FM	4	1	PPS		MCX	800u♦	0.0	10	3.0	7.0	65nØ	1.2m	.50		5	C	F192	FL14g
79	340195PC	4	1	PPS		MCX	10m♦	0.0	10	3.0	7.0	65nØ	1.2m	.50		4	8	F192	ML170
80	CM4042AD	4	1	PPS		MCX	200mØ	0.0	10	.01%	9.99	300n				5	C	F362	ML157b
81	CM4042AE	4	1	PPS		MCX	200mØ	0.0	10	.01%	9.99	400n				4	8	F362	ML157b
82#	HBC4042AD	4	1	PPS		MCX	20u%	0.0	10	.01%	9.99	75n				5	C	F362	MO001AE
83#	HBC4042AF	4	1	PPS		MCX	20u%	0.0	10	.01%	9.99	75n				5	C	F362	MO001AE
84#	HBC4042AK	4	1	PPS		MCX	20u%	0.0	10	.01%	9.99	75n				5	C	F362	MO004AC
85#	HBF4042AE	4	1	PPS		MCX	200u%	0.0	10	.01%	9.99	75n				4	8	F362	MO001AC
86#	HBF4042AF	4	1	PPS		MCX	200u%	0.0	10	.01%	9.99	75n				4	8	F362	MO001AE
87#	HEF4035B	4	1	PPS		MCX	400mØ	0.0	10	3.0	7.0		2.0m	.50		4	8	F437	MLØ
88#	HEF4076P	4	1	PPS		MCX	400mØ	0.0	10	3.0	7.0		2.0m	.50		4	8	F519	MLØ
89#	HEF40175P	4	1	PPS		MCX	400mØ	0.0	10	3.0	7.0		2.0m	.50		4	8	F406	MLØ
90#	HEF40194B	4	1	PPS		MCX	400mØ	0.0	10	3.0	7.0		2.0m	.50		4	8	F438	MLØ
91#	HEF40195B	4	1	PPS		MCX	400mØ	0.0	10	3.0	7.0		2.0m	.50		4	8	F439	MLØ
92▼	SCL4042BC	4	1	PPS		MCX	10m♦†	0.0	10	.01%	9.99	125n				4	8	F362	ML89
93▼	SCL4042BD	4	1	PPS		MCX	10m♦†	0.0	10	.01%	9.99	125n				5	C	F362	ML62a
94▼	SCL4042BE	4	1	PPS		MCX	10m♦†	0.0	10	.01%	9.99	125n				5	C	F362	FL23
95▼	SCL4042BF	4	1	PPS		MCX	10m♦†	0.0	10	.01%	9.99	125n				5	C	F362	CHØ
96▼	SCL4042BHN	4	1	PPS		MCX	10m♦†	0.0	10	.01%	9.99	125n				5	C	F362	ML4g
97	CM4035AE	4	1	PPS	2.0mØ	MCX	14m♦	0.0	10.0	.05%	9.95	300nØ	310u	9.5		5	C	F178	ML4g
98	N7495A	4	1	PPS	36m†	BTX	315m	0.0	5.0	.80	2.0	35n	16m	.40		0	7	F36	ML86
99#	FZJ161	4	1	PPS	500k	BDX	715m	0.0	15	4.5	7.5	500nØ	18m	1.7		0	7	F321	ML89c
100#	FZJ165	4	1	PPS	500k	BDX	715m	0.0	15	4.5	7.5	500nØ	18m	1.7		2	8	F321	ML89c
101	MC894P	4	1	PPS	1.0M†	BRX	225m†	0.0	11	.57	.79	55n†				0	7	F39	ML38
102#	HBF4035AE	4	1	PPS	2.0MØ	MCX	14m♦	0.0	10	.05%	9.9	300nØ	310u%	9.5		4	8	F178	MO001AC
103#	HBF4035AF	4	1	PPS	2.0MØ	MCX	14m♦	0.0	10	.05%	9.9	300nØ	310u%	9.5		4	8	F178	ML127c
104	375AJ	4	1	PPS	3.0M†	BDX	1.0	0.0	15	1.8%	13	600n	7.8m	1.8		3	7	F37a	ML89b
105	375AL	4	1	PPS	3.0M†	BDX	960m	0.0	15	1.8%	13	600n	7.8m	1.8		3	7	F37a	ML127b
106	375BL	4	1	PPS	3.0M†	BDX	576m	0.0	12	1.5%	10	550n	6.3m	1.5		5	C	F37a	ML127b
107	375CJ	4	1	PPS	3.0M†	BDX	576m	0.0	12	1.5%	10	550n	6.3m	1.5		3	8	F37a	ML89b
108	375CL	4	1	PPS	3.0M†	BDX	576m	0.0	12	1.5%	10	550n	6.3m	1.5		3	8	F37a	ML127b
109	375ML	4	1	PPS	3.0M†	BDX	960m	0.0	15	1.8%	13	600n	7.8m	1.8		5	C	F37a	ML127b

SYMBOLS AND CODES EXPLAINED IN INTERPRETER

7. SHIFT REGISTERS

IN ORDER OF(1)No.BITS/REG(2)No.REGISTERS (3)OP.CODE(4)MAX W/C FREQ(5)STRUCT(6)TYPE No

LINE No.	6 TYPE No.	ORGANIZATION 1 BITS PER REGISTER	ORGANIZATION 2 No. REGS	3 OPER. CODE	4 MAX WORST CASE FREQ. (Hz)	5 STRUCTURE CODE	MAX OPER. POWER DISS. (W)	RATED POWER SUP. SPAN NEG. (V)	RATED POWER SUP. SPAN POS. (V)	INPUT LOGIC LEVELS MAX '0' (V)	INPUT LOGIC LEVELS MIN '1' (V)	MAX PROP. DELAY (s)	MIN OUTPUT SINK CURRENT (A)	MIN OUTPUT SINK CURRENT @ OUT (V)	MIN CLOCK FREQ. (Hz)	OPER. TEMP. RANGE CODE -	OPER. TEMP. RANGE CODE +	DRAWINGS LOGIC/ BLOCK	DRAWINGS OUTLINE
1	JANM38510/02801BCA	4	1	PPS	3.0M*	BTX	20mØ	0.0	5.0	.70	2.0	250m	2.0m	.30		5	C	F155a	ML137
2	JANM38510/02801BCB	4	1	PPS	3.0M*	BTX	20mØ	0.0	5.0	.70	2.0	250n	2.0m	.30		5	C	F155a	ML137
3	JANM38510/02801BDA	4	1	PPS	3.0M*	BTX	20mØ	0.0	5.0	.70	2.0	250n	2.0m	.30		5	C	F155a	FL22
4	JANM38510/02801BDB	4	1	PPS	3.0M*	BTX	20mØ	0.0	5.0	.70	2.0	250n	2.0m	.30		5	C	F155a	FL22
5	JANM38510/02801CCA	4	1	PPS	3.0M*	BTX	20mØ	0.0	5.0	.70	2.0	250n	2.0m	.30		5	C	F155a	ML137
6	JANM38510/02801CCB	4	1	PPS	3.0M*	BTX	20mØ	0.0	5.0	.70	2.0	250n	2.0m	.30		5	C	F155a	ML137
7	JANM38510/02801CDA	4	1	PPS	3.0M*	BTX	20mØ	0.0	5.0	.70	2.0	250n	2.0m	.30		5	C	F155a	FL22
8	JANM38510/02801CDB	4	1	PPS	3.0M*	BTX	20mØ	0.0	5.0	.70	2.0	250n	2.0m	.30		5	C	F155a	FL22
9	SN54L95J	4	1	PPS	3.0MØ	BTX	19m†	0.0	5.0	.70	2.0	200nØ	2.0m	.30		5	C	F155a	ML66b
10	SN54L95T	4	1	PPS	3.0MØ	BTX	19m†	0.0	5.0	.70	2.0	200nØ	2.0m	.30		5	C	F155a	TO84
11	SN54L99J	4	1	PPS	3.0MØ	BTX	19m†	0.0	5.0	.70	2.0	200nØ	2.0m	.30		5	C	F94	ML61
12	SN74L95J	4	1	PPS	3.0MØ	BTX	19m†	0.0	5.0	.70	2.0	200nØ	2.0m	.40		0	7	F155a	ML66b
13	SN74L95N	4	1	PPS	3.0MØ	BTX	19m†	0.0	5.0	.70	2.0	200nØ	2.0m	.40		0	7	F155a	ML71
14	SN74L99J	4	1	PPS	3.0MØ	BTX	19m†	0.0	5.0	.70	2.0	200nØ	2.0m	.40		0	7	F94	ML61
15	SN74L99N	4	1	PPS	3.0MØ	BTX	19m†	0.0	5.0	.70	2.0	200nØ	2.0m	.40		0	7	F94	ML48
16#	ZN54L95E	4	1	PPS	3.0MØ	BTX	19m†	0.0	5.0	.80	2.0		2.0m	.40		5	C	PN14y	ML71e
17#	ZN54L95J	4	1	PPS	3.0MØ	BTX	19m†	0.0	5.0	.80	2.0		2.0m	.40		5	C	PN14y	ML64f
18#	ZN74L95E	4	1	PPS	3.0MØ	BTX	19m†	0.0	5.0	.80	2.0		2.0m	.40		0	7	PN14y	ML71e
19#	ZN74L95J	4	1	PPS	3.0MØ	BTX	19m†	0.0	5.0	.80	2.0		2.0m	.40		0	7	PN14y	ML64f
20	CM4035AD	4	1	PPS	3.0MØ	MCX	6.0m♦	0.0	10	.05%	9.95	200nØ	450u	9.5		5	C	F178	ML4g
21	CM4035AF	4	1	PPS	3.0MØ	MCX	6.0m♦	0.0	10	.05%	9.95	300nØ	450u	9.5		5	C	F178	ML17
22#	HBC4035AD	4	1	PPS	3.0MØ	MCX	6.0m♦	0.0	10	.05%	9.9	200nØ	450u	9.5		5	C	F178	ML127c
23#	HBC4035AF	4	1	PPS	3.0MØ	MCX	6.0m♦	0.0	10	.05%	9.9	200nØ	450u	9.5		5	C	F178	ML127c
24#	HBC4035AK	4	1	PPS	3.0MØ	MCX	6.0m♦	0.0	10	.05%	9.9	200nØ	450u	9.5		5	C	F178	MO004AC
25▼#	HD14035B	4	1	PPS	3.0MØ	MCX		0.0	15	4.0	11	240n				4	8	F259	
26	MC14035BAL	4	1	PPS	3.0MØ	MCX	300u♦Ø	0.0	15	4.0	11	190nØ	3.4m	1.5		5	C	F259	ML5
27	MC14035BCL	4	1	PPS	3.0MØ	MCX	1.2m♦Ø	0.0	15	4.0	11	190nØ	3.0m	1.5		4	8	F259	ML5
28	MC14035BCP	4	1	PPS	3.0MØ	MCX	1.2m♦Ø	0.0	15	4.0	11	190nØ	3.0m	1.5		4	8	F259	ML145
29	SCL4035BC	4	1	PPS	4.0MØ	MCA	300u♦	0.0	15	4.0	11	190nØ	3.4mØ	1.5		5	C	F178	ML127t
30	SCL4035BD	4	1	PPS	4.0MØ	MCA	300u♦	0.0	15	4.0	11	190nØ	3.4mØ	1.5		5	C	F178	MO001AE
31	SCL4035BE	4	1	PPS	4.0MØ	MCA	300u♦	0.0	15	4.0	11	190nØ	3.0mØ	1.5		4	8	F178	ML127u
32	SCL4035BF	4	1	PPS	4.0MØ	MCA	300u♦	0.0	15	4.0	11	190nØ	3.4mØ	1.5		5	C	F178	MO004AH
33▼	SCL4035BHN	4	1	PPS	4.0MØ	MCA	300u♦	0.0	15	4.0	11	190nØ	3.4mØ	1.5		5	C	F178	CHØ
34	MSR4	4	1	PPS	5.0M	Ø	360m	0.0	5.0	.40	3.0					0	7	F78	
35	CD4035AD	4	1	PPS	5.0MΔØ	MCX	6.0m♦	0.0	10	.05%	9.95	200nØ	870u	.50		5	C	F178	MO001AE
36	CD4035AE	4	1	PPS	5.0MΔØ	MCX	14m♦	0.0	10	.05%	9.95	300nØ	590u	.50		4	8	F178	MO001AC
37	CD4035AF	4	1	PPS	5.0MΔØ	MCX	6.0m♦	0.0	10	.05%	9.95	200nØ	870u	.50		5	C	F178	MO001AC
38	CD4035AH	4	1	PPS	5.0MΔØ	MCX	6.0m♦	0.0	10	.05%	9.95	200nØ	870u	.50		5	C	F178	CH3
39	CD4035AK	4	1	PPS	5.0MΔØ	MCX	6.0m♦	0.0	10	.05%	9.95	200nØ	870u	.50		5	C	F178	MO004AC
40	CD4035AY	4	1	PPS	5.0MΔØ	MCX	1.4m♦	0.0	10	.05%	9.95	300nØ	590u	.50		4	8	F178	MO001AC
41▼	SCL4035ABD	4	1	PPS	5.0MtØ	MCX	6.0m♦	0.0	10	.05%	9.95	200nØ	450u%	9.5		5	C	F178	ML4G
42▼	SCL4035ABF	4	1	PPS	5.0MtØ	MCX	6.0m♦	0.0	10	.05%	9.95	200nØ	450u%	9.5		5	C	F178	ML62a
43▼	SCL4035ABHN	4	1	PPS	5.0MtØ	MCX	6.0m♦	0.0	10	.05%	9.95	200nØ	450u%	9.5		4	8	F178	ML89
44#	uPD4035C	4	1	PPS	5.0MtØ	MCX	200mØØ	0.0	10	.30	.70	300n	590u	.50		4	8	F178	MO001AC
45▼#	HD14194B	4	1	PPS	6.0MØ	MCX		0.0	15	4.0	11	170n				4	8	PN16fm	
46	MC14076BAL	4	1	PPS	6.0MØ	MCX	300u♦Ø	0.0	15	4.0	11§	180nØ	3.4m	1.5		5	C	F329	ML5
47	MC14076BCL	4	1	PPS	6.0MØ	MCX	1.2m♦Ø	0.0	15	4.0	11§	180nØ	3.0m	1.5		4	8	F329	ML5
48	MC14076BCP	4	1	PPS	6.0MØ	MCX	1.2m♦Ø	0.0	15	4.0	11§	180nØ	3.0m	1.5		4	8	F329	ML145
49	MC14194BAL	4	1	PPS	6.0MØ	MCX	300u♦Ø	0.0	15	4.0	11	220nØ	3.4m	1.5		5	C	F245	ML157a
50	MC14194BCL	4	1	PPS	6.0MØ	MCX	1.2m♦Ø	0.0	15	4.0	11	220nØ	3.0m	1.5		4	8	F245	ML157a
51	MC14194BCP	4	1	PPS	6.0MØ	MCX	1.2m♦Ø	0.0	15	4.0	11	220nØ	3.0m	1.5		4	8	F245	ML145
52	MC14175BAL	4	1	PPS	6.5MØ	MCX	300u♦Ø	0.0	15	4.0	11	150nØ	3.4m	1.5		5	C	F398	ML157a
53	MC14175BCL	4	1	PPS	6.5MØ	MCX	1.2m♦Ø	0.0	15	4.0	11	150nØ	3.0m	1.5		4	8	F398	ML157a
54	MC14175BCP	4	1	PPS	6.5MØ	MCX	1.2m♦Ø	0.0	15	4.0	11	150nØ	3.0m	1.5		4	8	F398	ML145
55	SCL4076BC	4	1	PPS	8.0MØ	MCA	300u♦	0.0	15	4.0	11	90nØ	3.4mØ	1.5		5	C	F329	ML127t
56	SCL4076BD	4	1	PPS	8.0MØ	MCA	300u♦	0.0	15	4.0	11	90nØ	3.4mØ	1.5		5	C	F329	MO001AE
57	SCL4076BE	4	1	PPS	8.0MØ	MCA	300u♦	0.0	15	4.0	11	90nØ	3.0mØ	1.5		4	8	F329	ML127u
58	SCL4076BF	4	1	PPS	8.0MØ	MCA	300u♦	0.0	15	4.0	11	90nØ	3.4mØ	1.5		5	C	F329	MO004AH
59▼	SCL4076BHN	4	1	PPS	8.0MØ	MCA	300u♦	0.0	15	4.0	11	90nØ	3.4mØ	1.5		5	C	F329	CHØ
60	CD4076BD	4	1	PPS	8.0MΔ	MCX	500mØ	0.0	15	4.0	11§	180n	3.4mØ	1.5		5	C	F329	MO001AE
61	CD4076BE	4	1	PPS	8.0MΔ	MCX	500mØ	0.0	15	4.0	11§	180n	3.4mØ	1.5		4	8	F329	MO001AC
62	CD4076BF	4	1	PPS	8.0MΔ	MCX	500mØ	0.0	15	4.0	11§	180n	3.4mØ	1.5		5	C	F329	MO001AC
63	CD4076BH	4	1	PPS	8.0MΔ	MCX	500mØ	0.0	15	4.0	11§	180n	3.4mØ	1.5		5	C	F329	CH9
64#	HCC4076BD	4	1	PPS	8.0MΔ	MCX	200mØ	0.0	15	4.0	11§	180n	3.4m	1.5		5	C	F329	ML1e
65#	HCC4076BF	4	1	PPS	8.0MΔ	MCX	200mØ	0.0	15	4.0	11§	180n	3.4m	1.5		5	C	F329	ML127c
66#	HCC4076BK	4	1	PPS	8.0MΔ	MCX	200mØ	0.0	15	4.0	11§	180n	3.4m	1.5		5	C	F329	FL31
67#	HCF4076BE	4	1	PPS	8.0MΔ	MCX	200mØ	0.0	15	4.0	11§	180n	3.4m	1.5		4	8	F329	ML236
68#	HCF4076BF	4	1	PPS	8.0MΔ	MCX	200mØ	0.0	15	4.0	11§	180n	3.4m	1.5		4	8	F329	ML127c
69	93L00DC	4	1	PPS	10M*Ø	BTX	115m	0.0	5.0	.70	2.0	60n	8.0m	.30		0	7	F2	ML15a
70	93L00DM	4	1	PPS	10M*Ø	BTX	115m	0.0	5.0	.70	2.0	60n	4.8m	.30		5	C	F2	ML15a
71	93L00FC	4	1	PPS	10M*Ø	BTX	115m	0.0	5.0	.70	2.0	60n	8.0m	.30		0	7	F2	FL14
72	93L00FM	4	1	PPS	10M*Ø	BTX	115m	0.0	5.0	.70	2.0	60n	4.8m	.30		5	C	F2	FL14
73	93L00PC	4	1	PPS§	10M*Ø	BTX	115m	0.0	5.0	.70	2.0	60n	8.0m	.30		0	7	F2	ML170
74	AM93L00DC	4	1	PPS	10M†Ø	BTX	120mØ	0.0	5.0	.70	2.0	75nØ	4.9m	.30		0	7	F2	ML127d
75	AM93L00DM	4	1	PPS	10M†Ø	BTX	126mØ	0.0	5.0	.70	2.0	75nØ	4.9m	.30		5	C	F2	ML62c
76	AM93L00FM	4	1	PPS	10M†Ø	BTX	120mØ	0.0	5.0	.70	2.0	75nØ	4.9m	.30		0	7	F2	FL33b
77	AM93L00PC	4	1	PPS	10M†Ø	BTX	115m	0.0	5.0	.70	2.0	75nØ	4.9m	.30		5	C	F2	ML89a
78#	FLJ231-7494	4	1	PPS	10M	BTX	305m	0.0	5.0	.80	2.0	40n	16m	.40		0	7	F467	MLØ
79#	FLJ235-8494	4	1	PPS	10M	BTX	305m	0.0	5.0	.80	2.0	40n	16m	.40		2	8	F467	MLØ
80	M204	4	1	PPS	10M	BTX	200m			.40	2.0	35n				0	7		PLØ
81	MC7496L	4	1	PPS	10M	BTX	240m†	0.0	5.0	.40%	2.4	40n	16m	.40		0	7	F40	ML127b
82	N7494N	4	1	PPS	10MØ	BTX	290m	0.0	5.0	.80	2.0	40n	16m	.40		0	7	F92	MO001AE
83▼#	RCP3271B	4	1	PPS	10MØ	BTX	450m♦	0.0	5.0	.90%	2.1	60nØ	15m	.40		0	7	F124	ML85
84	SP3271B	4	1	PPS	10MØ	BTX	450m♦	0.0	5.0	.90%	2.1	60nØ	15m	.40		0	7	F124	ML85
85	4035BDC	4	1	PPS	10MØ	MCX	9.0m♦	0.0	15	4.0	11	180n	4.5m	1.5		4	8	F410	ML157e
86	4035BDM	4	1	PPS	10MØ	MCX	9.0m♦	0.0	15	4.0	11	180n	4.5m	1.5		5	C	F410	ML157e
87	4035BFC	4	1	PPS	10MØ	MCX	9.0m♦	0.0	15	4.0	11	180n	4.5m	1.5		4	8	F410	FL14j
88	4035BFM	4	1	PPS	10MØ	MCX	9.0m♦	0.0	15	4.0	11	180n	4.5m	1.5		5	C	F410	FL14j
89	4035BPC	4	1	PPS	10MØ	MCX	9.0m♦	0.0	15	4.0	11	180n	4.5m	1.5		4	8	F410	ML170
90	40194BDC	4	1	PPS	10MØ	MCX	3.0m♦	0.0	15	4.0	11	64n	4.5m	1.5		4	8	F485	ML157e
91	40194BDM	4	1	PPS	10MØ	MCX	3.0m♦	0.0	15	4.0	11	64n	4.5m	1.5		5	C	F485	ML157e
92	40194BFC	4	1	PPS	10MØ	MCX	3.0m♦	0.0	15	4.0	11	64n	4.5m	1.5		4	8	F485	FL14j
93	40194BFM	4	1	PPS	10MØ	MCX	3.0m♦	0.0	15	4.0	11	64n	4.5m	1.5		5	C	F485	FL14j
94	40194BPC	4	1	PPS	10MØ	MCX	3.0m♦	0.0	15	4.0	11	64n	4.5m	1.5		4	8	F485	ML170
95	40195BDC	4	1	PPS	10MØ	MCX	9.0m♦	0.0	15	4.0	11	64n	4.5m	1.5		4	8	F486	ML157e
96	40195BDM	4	1	PPS	10MØ	MCX	9.0m♦	0.0	15	4.0	11	64n	4.5m	1.5		5	C	F486	ML157e
97	40195BFC	4	1	PPS	10MØ	MCX	9.0m♦	0.0	15	4.0	11	64n	4.5m	1.5		4	8	F486	FL14j
98	40195BFM	4	1	PPS	10MØ	MCX	9.0m♦	0.0	15	4.0	11	64n	4.5m	1.5		5	C	F486	FL14j
99	40195BPC	4	1	PPS	10MØ	MCX	9.0m♦	0.0	15	4.0	11	64n	4.5m	1.5		4	8	F486	ML170
100#	HEF4035P	4	1	PPS	10M	MCX	400mØ	0.0	10	3.0	7.0	250n†	1.2m	.50		4	8	F437	ML48e
101#	HEF4076B	4	1	PPS	10M	MCX	400mØ	0.0	10	3.0	7.0	80n†	2.0m	.50		4	8	F519	ML2g
102	34035DC	4	1	PPS	12MΔ†	MCX	10m♦	0.0	10	3.0	7.0	80n†	1.2m	.50		4	8	F410	ML127s

SYMBOLS AND CODES EXPLAINED IN INTERPRETER

7. SHIFT REGISTERS

IN ORDER OF(1)No.BITS/REG(2)No.REGISTERS (3)OP.CODE(4)MAX W/C FREQ(5)STRUCT(6)TYPE No

LINE No.	6 TYPE No.	ORGANIZATION 1 BITS PER REGISTER	ORGANIZATION 2 No. REGS	3 OPER. CODE	4 MAX WORST CASE FREQ. (Hz)	5 STRUC TURE CODE	MAX OPER. POWER DISS. (W)	RATED POWER SUP. SPAN NEG. (V)	RATED POWER SUP. SPAN POS. (V)	INPUT LOGIC LEVELS MAX '0' (V)	INPUT LOGIC LEVELS MIN '1' (V)	MAX PROP. DELAY (s)	MIN OUTPUT SINK CURRENT (A)	MIN OUTPUT SINK CURRENT @ OUT (V)	MIN CLOCK FREQ. (Hz)	OPER. TEMP. RANGE CODE -	OPER. TEMP. RANGE CODE +	DRAWINGS LOGIC/ BLOCK	DRAWINGS OUTLINE
1	34035DM	4	1	PPS	12MΔ↑	MCX	800u♦	0.0	10	3.0	7.0	80n↑	1.2m	.50		5	C	F410	ML127s
2	34035FC	4	1	PPS	12MΔ↑	MCX	10m♦	0.0	10	3.0	7.0	80n↑	1.2m	.50		4	8	F410	FL14g
3	34035FM	4	1	PPS	12MΔ↑	MCX	800u♦	0.0	10	3.0	7.0	80n↑	1.2m	.50		5	C	F410	FL14g
4	34035PC	4	1	PPS	12MΔ↑	MCX	10m♦	0.0	10	3.0	7.0	80n↑	1.2m	.50		4	8	F410	ML170
5#	HEF40194P	4	1	PPS	14M	MCX	400m∅	0.0	10	3.0	7.0	180n	1.2m	.50		4	8	F438	ML48e
6#	HEF40195P	4	1	PPS	14M	MCX	400m∅	0.0	10	3.0	7.0	180n	1.2m	.50		4	8	F439	ML48e
7#	FLJ491-49702	4	1	PPS	15M	BTX	170m	0.0	5.0	.80	2.0	20n	16m	.40		0	7	PN16em	ML2k
8#	FLJ495-49802	4	1	PPS	15M	BTX	170m	0.0	5.0	.80	2.0	20n	16m	.40		2	8	PN16em	ML2k
9	JANM38510/15901BEA	4	1	PPS	15M	BTX	473m∅	0.0	5.0	.80	2.0	53n	9.6m	.40		5	C	F37	ML143
10	JANM38510/15901BEB	4	1	PPS	15M	BTX	473m∅	0.0	5.0	.80	2.0	53n	9.6m	.40		5	C	F37	ML143
11	JANM38510/15901BFA	4	1	PPS	15M	BTX	473m∅	0.0	5.0	.80	2.0	53n	9.6m	.40		5	C	F37	FL31
12	JANM38510/15901BFB	4	1	PPS	15M	BTX	473m∅	0.0	5.0	.80	2.0	53n	9.6m	.40		5	C	F37	FL31
13	JANM38510/15901CEA	4	1	PPS	15M	BTX	473m∅	0.0	5.0	.80	2.0	53n	9.6m	.40		5	C	F37	ML143
14	JANM38510/15901CEB	4	1	PPS	15M	BTX	473m∅	0.0	5.0	.80	2.0	53n	9.6m	.40		5	C	F37	ML143
15	JANM38510/15901CFA	4	1	PPS	15M	BTX	473m∅	0.0	5.0	.80	2.0	53n	9.6m	.40		5	C	F37	FL31
16	JANM38510/15901CFB	4	1	PPS	15M	BTX	473m∅	0.0	5.0	.80	2.0	53n	9.6m	.40		5	C	F37	FL31
17	N8270A	4	1	PPS	15MØ	BTX	247mØ	0.0	5.0	.40%	2.6	40nØ	11m	.40		0	7	F124b	ML86
18	N8270F	4	1	PPS	15MØ	BTX	247mØ	0.0	5.0	.40%	2.6	40nØ	11m	.40		0	7	F124b	ML93b
19	N8270N	4	1	PPS	15MØ	BTX	246m	0.0	5.0	.80	2.0	20n	11m	.40		0	7	F124b	ML86
20	N8270W	4	1	PPS	15MØ	BTX	247mØ	0.0	5.0	.40%	2.6	40nØ	11m	.40		0	7	F124	FL24
21	N8271B	4	1	PPS	15MØ	BTX	344mØ	0.0	5.0	.40%	2.6	40 Ø	11m	.40		0	7	F124a	ML132
22	N8271F	4	1	PPS	15MØ	BTX	344mØ	0.0	5.0	.40%	2.6	40nØ	11m	.40		0	7	F124a	ML60a
23	N8271N	4	1	PPS	15MØ	BTX	341m	0.0	5.0	.80	2.0	20n	11m	.40		0	7	F124a	MO001AE
24	N8271W	4	1	PPS	15MØ	BTX	344mØ	0.0	5.0	.40%	2.6	40nØ	11m	.40		0	7	F124a	FL25
25	N9300B	4	1	PPS	15M*	BTX	300m↑	0.0	5.0	.85	1.8	45n	600u	.45		0	7	F2	ML132
26	N9300E	4	1	PPS	15M*	BTX	300m↑	0.0	5.0	.85	1.8	45n	600u	.45		0	7	F2	FL25
27	N74178A	4	1	PPS	15M*	BTX	247m	0.0	5.0	.40%	2.6	40nØ	11m	.40		0	7	F124b	ML86
28	N74178F	4	1	PPS	15M*	BTX	247m	0.0	5.0	.40%	2.6	40nØ	11m	.40		0	7	F124b	ML93b
29	N74179B	4	1	PPS	15M*	BTX	344m	0.0	5.0	.40%	2.6	40nØ	11m	.40		0	7	F124a	ML132
30	N74179F	4	1	PPS	15M*	BTX	344m	0.0	5.0	.40%	2.6	40nØ	11m	.40		0	7	F124a	ML127m
31#	RC8270A	4	1	PPS	15MØ	BTX	247mØ	0.0	5.0	.40%	2.6	40nØ	11m	.40		5	C	F124b	ML86
32#	RC8270F	4	1	PPS	15MØ	BTX	247mØ	0.0	5.0	.40%	2.6	40nØ	11m	.40		5	C	F124b	ML93b
33#	RC8270W	4	1	PPS	15MØ	BTX	247mØ	0.0	5.0	.40%	2.6	40nØ	11m	.40		5	C	F124b	FL24
34#	RC8271B	4	1	PPS	15MØ	BTX	344mØ	0.0	5.0	.40%	2.6	40nØ	11m	.40		5	C	F124a	ML132
35#	RC8271F	4	1	PPS	15MØ	BTX	344mØ	0.0	5.0	.40%	2.6	40nØ	11m	.40		5	C	F124a	ML60a
36#	RC8271W	4	1	PPS	15MØ	BTX	344mØ	0.0	5.0	.40%	2.6	40nØ	11m	.40		5	C	F124a	FL25
37#	RC9300B	4	1	PPS	15M*	BTX	300m↑	0.0	5.0	.85	1.8	45n	600u	.45		0	7	F2	ML132
38#	RC54178A	4	1	PPS	15M*	BTX	247m	0.0	5.0	.40%	2.6	40nØ	11n	.40		5	C	F124b	ML86
39#	RC54178F	4	1	PPS	15M*	BTX	247m	0.0	5.0	.40%	2.6	40nØ	11n	.40		5	C	F124b	ML93b
40#	RC54178W	4	1	PPS	15M*	BTX	247m	0.0	5.0	.40%	2.6	40nØ	11n	.40		5	C	F347	FL24
41#	RC54179B	4	1	PPS	15M*	BTX	344m	0.0	5.0	.40%	2.6	40nØ	11n	.40		5	C	F124a	ML132
42#	RC54179F	4	1	PPS	15M*	BTX	344m	0.0	5.0	.40%	2.6	40nØ	11n	.40		5	C	F124a	ML127m
43#	RC54179W	4	1	PPS	15M*	BTX	344m	0.0	5.0	.40%	2.6	40nØ	11n	.40		5	C	F124a	FL25
44	S8270A	4	1	PPS	15MØ	BTX	247mØ	0.0	5.0	.40%	2.6	40nØ	11m	.40		5	C	F124b	ML86
45	S8270F	4	1	PPS	15MØ	BTX	247mØ	0.0	5.0	.40%	2.6	40nØ	11m	.40		5	C	F124b	ML93b
46	S8270W	4	1	PPS	15MØ	BTX	247mØ	0.0	5.0	.40%	2.6	40nØ	11m	.40		5	C	F124b	FL24
47	S8271B	4	1	PPS	15MØ	BTX	344mØ	0.0	5.0	.40%	2.6	40 Ø	11m	.40		5	C	F124a	ML132
48	S8271F	4	1	PPS	15MØ	BTX	344mØ	0.0	5.0	.40%	2.6	40nØ	11m	.40		5	C	F124a	ML60a
49	S8271W	4	1	PPS	15MØ	BTX	344mØ	0.0	5.0	.40%	2.6	40nØ	11m	.40		5	C	F124a	FL25
50	S9300B	4	1	PPS	15M*	BTX	300m↑	0.0	5.0	.85	1.8	45n	600u	.45		0	7	F2	ML132
51	S9300E	4	1	PPS	15M*	BTX	300m↑	0.0	5.0	.85	1.8	45n	600u	.45		0	7	F2	FL25
52	S54178A	4	1	PPS	15M*	BTX	247m	0.0	5.0	.40%	2.6	40nØ	11n	.40		5	C	F124b	ML86
53	S54178F	4	1	PPS	15M*	BTX	247m	0.0	5.0	.40%	2.6	40nØ	11n	.40		5	c	F124b	ML93b
54	S54178W	4	1	PPS	15M*	BTX	247m	0.0	5.0	.40%	2.6	40nØ	11n	.40		5	C	F347	FL24
55	S54179B	4	1	PPS	15M*	BTX	344m	0.0	5.0	.40%	2.6	40nØ	11n	.40		5	C	F124a	ML132
56	S54179F	4	1	PPS	15M*	BTX	344m	0.0	5.0	.40%	2.6	40nØ	11n	.40		5	C	F124a	ML127m
57	S54179W	4	1	PPS	15M*	BTX	344m	0.0	5.0	.40%	2.6	40nØ	11n	.40		5	C	F124a	FL25
58	T100	4	1	PPS	15M	BTX	700m♦	0.0	5.0	0.0	5.0	15n						F379	PL∅
59	T101	4	1	PPS	15M	BTX	740m♦	0.0	5.0	0.0	5.0	15n						F379	PL∅
60#	FLJ161-7490	4	1	PPS	16M	BTX	210m	0.0	15	4.5	7.5	18n	18m	1.7		0	7	F321	ML89c
61#	FLJ165-8490	4	1	PPS	16M	BTX	210m	0.0	15	4.5	7.5	18n	18m	1.7		2	8	F321	ML89c
62	JANM38510/00901BAA	4	1	PPS	16M	BTX	422m∅	0.0	5.0	.80	2.0	49n	16m	.40		5	C	F36	FL21a
63	JANM38510/00901BAB	4	1	PPS	16M	BTX	422m∅	0.0	5.0	.80	2.0	49n	16m	.40		5	C	F36	FL21a
64	JANM38510/00901BCA	4	1	PPS	16M	BTX	422m∅	0.0	5.0	.80	2.0	49n	16m	.40		5	C	F155	ML143
65	JANM38510/00901BCB	4	1	PPS	16M	BTX	422m∅	0.0	5.0	.80	2.0	49n	16m	.40		5	C	F155	ML143
66	JANM38510/00901BDA	4	1	PPS	16M	BTX	422m∅	0.0	5.0	.80	2.0	49n	16m	.40		5	C	F36	FL22
67	JANM38510/00901BDB	4	1	PPS	16M	BTX	422m∅	0.0	5.0	.80	2.0	49n	16m	.40		5	C	F36	FL22
68	JANM38510/00901CAA	4	1	PPS	16M	BTX	422m∅	0.0	5.0	.80	2.0	49n	16m	.40		5	C	F36	FL21a
69	JANM38510/00901CAB	4	1	PPS	16M	BTX	422m∅	0.0	5.0	.80	2.0	49n	16m	.40		5	C	F36	FL21a
70	JANM38510/00901CCA	4	1	PPS	16M	BTX	422m∅	0.0	5.0	.80	2.0	49n	16m	.40		5	C	F155	ML143
71	JANM38510/00901CCB	4	1	PPS	16M	BTX	422m∅	0.0	5.0	.80	2.0	49n	16m	.40		5	C	F155	ML143
72	JANM38510/00901CDA	4	1	PPS	16M	BTX	422m∅	0.0	5.0	.80	2.0	49n	16m	.40		5	C	F36	FL22
73	JANM38510/00901CDB	4	1	PPS	16M	BTX	422m∅	0.0	5.0	.80	2.0	49n	16m	.40		5	C	F36	FL22
74	CD4035BD	4	1	PPS	16M↑	MCX	500m∅	0.0	15	4.0	11	80n↑	6.8m↑	1.5		5	C	F509	MO001AE
75	CD4035BE	4	1	PPS	16M↑	MCX	500m∅	0.0	15	4.0	11	80n↑	6.8m↑	1.5		4	8	F509	MO001AC
76	CD4035BF	4	1	PPS	16M↑	MCX	500m∅	0.0	15	4.0	11	80n↑	6.8m↑	1.5		5	C	F509	MO001AC
77▼	CD4035BH	4	1	PPS	16M↑	MCX	500m	0.0	15	4.0	11	80n↑	6.8m↑	1.5		5	C	F509	CH20
78#	HCC4035BD	4	1	PPS	16M↑	MCX	500m∅	0.0	15	4.0	11	80n↑	6.8m↑	1.5		5	C	F509	MO01AE
79#	HCC4035BF	4	1	PPS	16M↑	MCX	500m∅	0.0	15	4.0	11	80n↑	6.8m↑	1.5		5	C	F509	MO01AC
80#	HCC4035BK	4	1	PPS	16M↑	MCX	500m∅	0.0	15	4.0	11	80n↑	6.8m↑	1.5		5	C	F509	MO04AG
81#	HCF4035BE	4	1	PPS	16M↑	MCX	500m∅	0.0	15	4.0	11	80n↑	6.8m↑	1.5		4	8	F509	MO001AC
82#	HCF4035BF	4	1	PPS	16M↑	MCX	500m∅	0.0	15	4.0	11	80n↑	6.8m↑	1.5		4	8	F509	MO001AC
83#	HEF4076BD	4	1	PPS	16M*	MCX	400m∅	0.0	15	4.0	11§	90n	3.0m	1.5		4	8	F497	ML127x
84#	HEF4076BP	4	1	PPS	16M*	MCX	400m∅	0.0	15	4.0	11§	90n	3.0m	1.5		4	8	F497	ML89j
85▼#	HEF4076BT	4	1	PPS	16M*	MCX	400m∅	0.0	15	4.0	11§	90n	3.0	1.5		4	8	F497	FL83
86#	HEF40175B	4	1	PPS	16M	MCX	400m∅	0.0	10	3.0	7.0	25n↑	2.0m	.50		4	8	F406	ML2g
87	JANM38510/30606BCA	4	1	PPS	18M*	BTD	160m	0.0	5.5	.70	2.0	52n	12m	.40		5	C	F282	ML142
88	JANM38510/30606BCB	4	1	PPS	18M*	BTD	160m	0.0	5.5	.70	2.0	52n	12m	.40		5	C	F282	ML142

SYMBOLS AND CODES EXPLAINED IN INTERPRETER

7. SHIFT REGISTERS

IN ORDER OF(1)No.BITS/REG(2)No.REGISTERS (3)OP.CODE(4)MAX W/C FREQ(5)STRUCT(6)TYPE No

LINE No.	6 TYPE No.	ORGANIZATION 1 BITS PER REGISTER	ORGANIZATION 2 No. REGS	3 OPER. CODE	4 MAX WORST CASE FREQ. (Hz)	5 STRUCTURE CODE	MAX OPER. POWER DISS. (W)	RATED POWER SUP. SPAN NEG. (V)	RATED POWER SUP. SPAN POS. (V)	INPUT LOGIC LEVELS MAX '0' (V)	INPUT LOGIC LEVELS MIN '1' (V)	MAX PROP. DELAY (s)	MIN OUTPUT SINK CURRENT (A)	MIN OUTPUT SINK CURRENT @ OUT (V)	MIN CLOCK FREQ. (Hz)	OPER. TEMP. RANGE CODE -	OPER. TEMP. RANGE CODE +	DRAWINGS LOGIC/ BLOCK	DRAWINGS OUTLINE
1	JANM38510/30606BDA	4	1	PPS	18M*	BTD	160m	0.0	5.5	.70	2.0	52n	12m	.40		5	C	F282	FL22
2	JANM38510/30606BDB	4	1	PPS	18M*	BTD	160m	0.0	5.5	.70	2.0	52n	12m	.40		5	C	F282	FL22
3	JANM38510/30606CCA	4	1	PPS	18M*	BTD	160m	0.0	5.5	.70	2.0	52n	12m	.40		5	C	F282	ML142
4	JANM38510/30606CCB	4	1	PPS	18M*	BTD	160m	0.0	5.5	.70	2.0	52n	12m	.40		5	C	F282	ML142
5	JANM38510/30606CDA	4	1	PPS	18M*	BTD	160m	0.0	5.5	.70	2.0	52n	12m	.40		5	C	F282	FL22
6	JANM38510/30606CDB	4	1	PPS	18M*	BTD	160m	0.0	5.5	.70	2.0	52n	12m	.40		5	C	F282	FL22
7	JANM38510/00905BEA	4	1	PPS	18M	BTX	360mⱷ	0.0	5.0	.80	2.0	48n	16m	.40		5	C	F132	ML142
8	JANM38510/00905BEB	4	1	PPS	18M	BTX	360mⱷ	0.0	5.0	.80	2.0	48n	16m	.40		5	C	F132	ML142
9	JANM38510/00905BFA	4	1	PPS	18M	BTX	360mⱷ	0.0	5.0	.80	2.0	48n	16m	.40		5	C	F132	FL31
10	JANM38510/00905BFB	4	1	PPS	18M	BTX	360mⱷ	0.0	5.0	.80	2.0	48n	16m	.40		5	C	F132	FL31
11	JANM38510/00905CEA	4	1	PPS	18M	BTX	360mⱷ	0.0	5.0	.80	2.0	48n	16m	.40		5	C	F132	ML142
12	JANM38510/00905CEB	4	1	PPS	18M	BTX	360mⱷ	0.0	5.0	.80	2.0	48n	16m	.40		5	C	F132	ML142
13	JANM38510/00905CFA	4	1	PPS	18M	BTX	360mⱷ	0.0	5.0	.80	2.0	48n	16m	.40		5	C	F132	FL31
14	JANM38510/00905CFB	4	1	PPS	18M	BTX	360mⱷ	0.0	5.0	.80	2.0	48n	16m	.40		5	C	F132	FL31
15#	HEF4035BD	4	1	PPS	18M*	MCX	400mⱷ	0.0	15	4.0	11	100n	3.0m	1.5		4	8	F496	ML127x
16#	HEF4035BP	4	1	PPS	18M*	MCX	400mⱷ	0.0	15	4.0	11	100n	3.0m	1.5		4	8	F496	ML89j
17▼#	HEF4035BT	4	1	PPS	18M*	MCX	400mⱷ	0.0	15	4.0	11	100n	3.0	1.5		4	8	F496	FL83
18	4076BDC	4	1	PPS	19MØ†	MCX	9.0m♦	0.0	15	4.0	11	25n†	4.5m	1.5		4	8	F329	ML157e
19	4076BDM	4	1	PPS	19MØ†	MCX	9.0m♦	0.0	15	4.0	11	25n†	4.5m	1.5		5	C	F329	ML157e
20	4076BFC	4	1	PPS	19MØ†	MCX	9.0m♦	0.0	15	4.0	11	25n†	4.5m	1.5		4	8	F329	FL14j
21	4076BFM	4	1	PPS	19MØ†	MCX	9.0m♦	0.0	15	4.0	11	25n†	4.5m	1.5		5	C	F329	FL14j
22	4076BPC	4	1	PPS	19MØ†	MCX	9.0m♦	0.0	15	4.0	11	25n†	4.5m	1.5		4	8	F329	ML170
23#	HEF40195BD	4	1	PPS	19M*	MCX	400mⱷ	0.0	15	4.0	11	85n	3.0m	1.5		4	8	F500	ML127x
24#	HEF40195BP	4	1	PPS	19M*	MCX	400mⱷ	0.0	15	4.0	11	85n	3.0m	1.5		4	8	F500	ML89j
25▼#	HEF40195BT	4	1	PPS	19M*	MCX	400mⱷ	0.0	15	4.0	11	85n	3.0	1.5		4	8	F500	FL83
26	54LS95BJ	4	1	PPS	20MØ	BTD	105m	0.0	5.0	.70	2.0	40nØ	4.0m	.40		5	C	F402	ML63c
27	54LS95BW	4	1	PPS	20MØ	BTD	105m	0.0	5.0	.70	2.0	40nØ	4.0m	.40		5	C	F402	FL11c
28	74LS95BJ	4	1	PPS	20MØ	BTD	105m	0.0	5.0	.80	2.0	40nØ	4.0m	.40		0	7	F402	ML63c
29	74LS95BW	4	1	PPS	20MØ	BTD	105m	0.0	5.0	.80	2.0	40nØ	4.0m	.40		0	7	F402	FL11c
30▼#	HD74LS295B	4	1	PPS	20MΔ	BTD	165m	0.0	5.0	.80	2.0	20n	-20u	5.25	30M	2	7	F282	ML233
31▼#	HD74LS295BP	4	1	PPS	20MΔ	BTD	165m	0.0	5.0	.80	2.0	20n	-20u	5.25	30M	2	7	F282	ML261
32	JANM38510/30601BEA	4	1	PPS	20M*	BTD	127m	0.0	5.5	.70	2.0	53n	4.0m	.40		5	C	F245	ML143
33	JANM38510/30601BEB	4	1	PPS	20M*	BTD	127m	0.0	5.5	.70	2.0	53n	4.0m	.40		5	C	F245	ML143
34	JANM38510/30601BFA	4	1	PPS	20M*	BTD	127m	0.0	5.5	.70	2.0	53n	4.0m	.40		5	C	F245	FL31
35	JANM38510/30601BFB	4	1	PPS	20M*	BTD	127m	0.0	5.5	.70	2.0	53n	4.0m	.40		5	C	F245	FL31
36	JANM38510/30601CEA	4	1	PPS	20M*	BTD	127m	0.0	5.5	.70	2.0	53n	4.0m	.40		5	C	F245	ML143
37	JANM38510/30601CEB	4	1	PPS	20M*	BTD	127m	0.0	5.5	.70	2.0	53n	4.0m	.40		5	C	F245	ML143
38	JANM38510/30601CFA	4	1	PPS	20M*	BTD	127m	0.0	5.5	.70	2.0	53n	4.0m	.40		5	C	F245	FL31
39	JANM38510/30601CFB	4	1	PPS	20M*	BTD	127m	0.0	5.5	.70	2.0	53n	4.0m	.40		5	C	F245	FL31
40	JANM38510/30603BCA	4	1	PPS	20M*	BTD	116m	0.0	5.5	.70	2.0	56n	4.0m	.40		5	C	F402a	ML142
41	JANM38510/30603BCB	4	1	PPS	20M*	BTD	116m	0.0	5.5	.70	2.0	56n	4.0m	.40		5	C	F402a	ML142
42	JANM38510/30603BDA	4	1	PPS	20M*	BTD	116m	0.0	5.5	.70	2.0	56n	4.0m	.40		5	C	F402a	FL22
43	JANM38510/30603BDB	4	1	PPS	20M*	BTD	116m	0.0	5.5	.70	2.0	56n	4.0m	.40		5	C	F402a	FL22
44	JANM38510/30603CCA	4	1	PPS	20M*	BTD	116m	0.0	5.5	.70	2.0	56n	4.0m	.40		5	C	F402a	ML142
45	JANM38510/30603CCB	4	1	PPS	20M*	BTD	116m	0.0	5.5	.70	2.0	56n	4.0m	.40		5	C	F402a	ML142
46	JANM38510/30603CDA	4	1	PPS	20M*	BTD	116m	0.0	5.5	.70	2.0	56n	4.0m	.40		5	C	F402a	FL22
47	JANM38510/30603CDB	4	1	PPS	20M*	BTD	116m	0.0	5.5	.70	2.0	56n	4.0m	.40		5	C	F402a	FL22
48	JANM38510/30607BEA	4	1	PPS	20M*	BTD	160m	0.0	5.5	.70	2.0	56n	12m	.40		5	C	F283	ML143
49	JANM38510/30607BEB	4	1	PPS	20M*	BTD	160m	0.0	5.5	.70	2.0	56n	12m	.40		5	C	F283	ML143
50	JANM38510/30607BFA	4	1	PPS	20M*	BTD	160m	0.0	5.5	.70	2.0	56n	12m	.40		5	C	F283	FL31
51	JANM38510/30607BFB	4	1	PPS	20M*	BTD	160m	0.0	5.5	.70	2.0	56n	12m	.40		5	C	F283	FL31
52	JANM38510/30607CEA	4	1	PPS	20M*	BTD	160m	0.0	5.5	.70	2.0	56n	12m	.40		5	C	F283	ML143
53	JANM38510/30607CEB	4	1	PPS	20M*	BTD	160m	0.0	5.5	.70	2.0	56n	12m	.40		5	C	F283	ML143
54	JANM38510/30607CFA	4	1	PPS	20M*	BTD	160m	0.0	5.5	.70	2.0	56n	12m	.40		5	C	F283	FL31
55	JANM38510/30607CFB	4	1	PPS	20M*	BTD	160m	0.0	5.5	.70	2.0	56n	12m	.40		5	C	F283	FL31
56#	M53295P	4	1	PPS	20M*	BTX	82m	0.0	5.0	.80	2.0	35n	16m	.40		0	7	F155	ML86b
57	SM61	4	1	PPS	20MΔ†	BTX	40m%†	0.0	5.0	.80	2.0	40n	250uΔ	5.5		6	k	F250	ML9
58	SM63	4	1	PPS	20MΔ†	BTX	40m%†	0.0	5.0	.80	2.0	35n	250uΔ	5.5		6	k	F250	ML9
59	SM71	4	1	PPS	20MΔ†	BTX	40m%†	0.0	5.0	.80	2.0	40n	250uΔ	5.5		6	k	F250a	ML9
60	SM73	4	1	PPS	20MΔ†	BTX	40m%†	0.0	5.0	.80	2.0	40n	250uΔ	5.5		6	k	F250a	ML9
61#	T150B1	4	1	PPS	20M	BTX	300mⱷ	0.0	5.0	.85	1.6	45nØ	9.6m	.45		0	7	F2	ML60
62#	T150D1	4	1	PPS	20M	BTX	300mⱷ	0.0	5.0	.85	1.6	45nØ	9.6m	.45		0	7	F2	ML94
63#	T150D2	4	1	PPS	20M	BTX	300mⱷ	0.0	5.0	.90	1.4	45nØ	9.6m	.40		5	C	F2	ML94
64#	HEF40175BD	4	1	PPS	20M*	MCX	400mⱷ	0.0	15	4.0	11	50n	3.0m	1.5		4	8	F398	ML127x
65#	HEF40175BP	4	1	PPS	20M*	MCX	400mⱷ	0.0	15	4.0	11	50n	3.0m	1.5		4	8	F398	ML89j
66#	HEF40194BD	4	1	PPS	20M*	MCX	400mⱷ	0.0	15	4.0	11	60n	3.0m	1.5		4	8	PN16fm	ML127x
67#	HEF40194BP	4	1	PPS	20M*	MCX	400mⱷ	0.0	15	4.0	11	60n	3.0m	1.5		4	8	PN16fm	ML89j
68▼#	HEF40194BT	4	1	PPS	20M*	MCX	400mⱷ	0.0	15	4.0	11	60n	3.0	1.5		4	8	PN16fm	FL83
69	MC7270L	4	1	PPS	22M%†	BTX	180m†	0.0	5.0	.40%Ø	2.6	40nØ	12m	.40		0	7	F235	TO116
70	MC7270P	4	1	PPS	22M%†	BTX	180m†	0.0	5.0	.40%Ø	2.6	40nØ	12m	.40		0	7	F235	ML124
71	MC7271L	4	1	PPS	22M%†	BTX	180m†	0.0	5.0	.40%Ø	2.6	40nØ	12m	.40		0	7	F235a	ML60b
72	MC7271P	4	1	PPS	22M%†	BTX	180m†	0.0	5.0	.40%Ø	2.6	40nØ	12m	.40		0	7	F235a	ML5b

SYMBOLS AND CODES EXPLAINED IN INTERPRETER

7. SHIFT REGISTERS

IN ORDER OF(1)No.BITS/REG(2)No.REGISTERS
(3)OP.CODE(4)MAX W/C FREQ(5)STRUCT(6)TYPE No

LINE No.	6 TYPE No.	ORGANIZATION 1 BITS PER REGISTER	ORGANIZATION 2 No. REGS	3 OPER. CODE	4 MAX WORST CASE FREQ. (Hz)	5 STRUCTURE CODE	MAX OPER. POWER DISS. (W)	RATED POWER SUP. SPAN NEG. (V)	RATED POWER SUP. SPAN POS. (V)	INPUT LOGIC LEVELS MAX '0' (V)	INPUT LOGIC LEVELS MIN '1' (V)	MAX PROP. DELAY (s)	MIN OUTPUT SINK CURRENT (A)	MIN OUTPUT SINK CURRENT @ OUT (V)	MIN CLOCK FREQ. (Hz)	OPER. TEMP. RANGE CODE -	OPER. TEMP. RANGE CODE +	DRAWINGS LOGIC/ BLOCK	DRAWINGS OUTLINE
1	MC8270L	4	1	PPS	22M%†	BTX	180m†	0.0	5.0	.40%Ø	2.6	40nØ	12m	.40		5	C	F235	TO116
2	MC8271L	4	1	PPS	22M%†	BTX	180m†	0.0	5.0	.40%Ø	2.6	40nØ	12m	.40		5	C	F235a	ML60b
3	JANM38510/00906BEA	4	1	PPS	24M	BTX	372mØ	0.0	5.0	.80	2.0	34n	16m	.40		5	C	F191	ML142
4	JANM38510/00906BEB	4	1	PPS	24M	BTX	372mØ	0.0	5.0	.80	2.0	34n	16m	.40		5	C	F191	ML142
5	JANM38510/00906BFA	4	1	PPS	24M	BTX	372mØ	0.0	5.0	.80	2.0	34n	16m	.40		5	C	F191	FL31
6	JANM38510/00906BFB	4	1	PPS	24M	BTX	372mØ	0.0	5.0	.80	2.0	34n	16m	.40		5	C	F191	FL31
7	JANM38510/00906CEA	4	1	PPS	24M	BTX	372mØ	0.0	5.0	.80	2.0	34n	16m	.40		5	C	F191	ML142
8	JANM38510/00906CEB	4	1	PPS	24M	BTX	372mØ	0.0	5.0	.80	2.0	34n	16m	.40		5	C	F191	ML142
9	JANM38510/00906CFA	4	1	PPS	24M	BTX	372mØ	0.0	5.0	.80	2.0	34n	16m	.40		5	C	F191	FL31
10	JANM38510/00906CFB	4	1	PPS	24M	BTX	372mØ	0.0	5.0	.80	2.0	34n	16m	.40		5	C	F191	FL31
11	54LS395AJ	4	1	PPS	25MØ	BTD	145m	0.0	5.0	.70	2.0§	35nØ	12m	.40		5	C	F283	ML☑
12	54LS395AW	4	1	PPS	25MØ	BTD	145m	0.0	5.0	.70	2.0§	35nØ	12m	.40		5	C	F283	FL14h
13	JANM38510/30602BEA	4	1	PPS	25M*	BTD	116m	0.0	5.5	.70	2.0	53n	4.0m	.40		5	C	F108a	ML143
14	JANM38510/30602BEB	4	1	PPS	25M*	BTD	116m	0.0	5.5	.70	2.0	53n	4.0m	.40		5	C	F108a	ML143
15	JANM38510/30602BFA	4	1	PPS	25M*	BTD	116m	0.0	5.5	.70	2.0	53n	4.0m	.40		5	C	F108a	FL31
16	JANM38510/30602BFB	4	1	PPS	25M*	BTD	116m	0.0	5.5	.70	2.0	53n	4.0m	.40		5	C	F108a	FL31
17	JANM38510/30602CEA	4	1	PPS	25M*	BTD	116m	0.0	5.5	.70	2.0	53n	4.0m	.40		5	C	F108a	ML143
18	JANM38510/30602CEB	4	1	PPS	25M*	BTD	116m	0.0	5.5	.70	2.0	53n	4.0m	.40		5	C	F108a	ML143
19	JANM38510/30602CFA	4	1	PPS	25M*	BTD	116m	0.0	5.5	.70	2.0	53n	4.0m	.40		5	C	F108a	FL31
20	JANM38510/30602CFB	4	1	PPS	25M*	BTD	116m	0.0	5.5	.70	2.0	53n	4.0m	.40		5	C	F108a	FL31
21	N74LS95BF	4	1	PPS	25MØ	BTD	105m	0.0	5.0	.80	2.0	27n	16m	.40		0	7	F402	ML19f
22	N74LS95BN	4	1	PPS	25MØ	BTD	105m	0.0	5.0	.80	2.0	27n	16m	.40		0	7	F402	ML86
23	N74LS194AF	4	1	PPS	25MØ	BTD	115m	0.0	5.0	.80	2.0	22n	16m	.40		0	7	F245	ML127r
24	N74LS194AN	4	1	PPS	25MØ	BTD	115m	0.0	5.0	.80	2.0	22n	16m	.40		0	7	F245	MO001AE
25	N74LS298F	4	1	PPS	25MØ	BTD	105m	0.0	5.0	.80	2.0	27n	16m	.40		0	7	F535	ML127r
26	N74LS298N	4	1	PPS	25MØ	BTD	105m	0.0	5.0	.80	2.0	27n	16m	.40		0	7	F535	MO001AE
27	N74LS398F	4	1	PPS	25MØ	BTD	65m	0.0	5.0	.80	2.0	27n	16m	.40		0	7	F538	ML285
28	N74LS398N	4	1	PPS	25MØ	BTD	65m	0.0	5.0	.80	2.0	27n	16m	.40		0	7	F538	ML286
29	N74LS399F	4	1	PPS	25MØ	BTD	65m	0.0	5.0	.80	2.0	27n	16m	.40		0	7	F539	ML127r
30	N74LS399N	4	1	PPS	25MØ	BTD	65m	0.0	5.0	.80	2.0	27n	16m	.40		0	7	F539	MO001AE
31	S54LS95BF	4	1	PPS	25MØ	BTD	105m	0.0	5.0	.80	2.0	27n	16m	.40		5	C	F402	ML19f
32	S54LS95BW	4	1	PPS	25MØ	BTD	105m	0.0	5.0	.80	2.0	27n	16m	.40		5	C	F402	FL51
33	S54LS194AF	4	1	PPS	25MØ	BTD	115m	0.0	5.0	.80	2.0	22n	16m	.40		5	C	F245	ML127r
34	S54LS194AW	4	1	PPS	25MØ	BTD	115m	0.0	5.0	.80	2.0	22n	16m	.40		5	C	F245	FL14d
35	S54LS298F	4	1	PPS	25MØ	BTD	105m	0.0	5.0	.80	2.0	27n	16m	.40		5	C	F535	ML127r
36	S54LS298W	4	1	PPS	25MØ	BTD	105m	0.0	5.0	.80	2.0	27n	16m	.40		5	C	F535	FL14d
37	S54LS398F	4	1	PPS	25MØ	BTD	65m	0.0	5.0	.80	2.0	27n	16m	.40		5	C	F538	ML285
38	S54LS399F	4	1	PPS	25MØ	BTD	65m	0.0	5.0	.80	2.0	27n	16m	.40		5	C	F539	ML127r
39	S54LS399W	4	1	PPS	25MØ	BTD	65m	0.0	5.0	.80	2.0	27n	16m	.40		5	C	F539	FL14d
40	SN54LS295BJ	4	1	PPS	25MØ	BTD	145m	0.0	5.0	.70	2.0§	35nØ	12m	.40		5	C	F282	TO116
41	SN54LS295BW	4	1	PPS	25MØ	BTD	145m	0.0	5.0	.70	2.0§	35nØ	12m	.40		5	C	F282	MO004AA
42	SN54LS395AJ	4	1	PPS	25MØ	BTD	145m	0.0	5.0	.70	2.0§	35nØ	12m	.40		5	C	F283	ML61a
43	SN54LS395AW	4	1	PPS	25MØ	BTD	145m	0.0	5.0	.70	2.0§	35nØ	12m	.40		5	C	F283	MO004AC
44	SN74LS295BJ	4	1	PPS	25MØ	BTD	145m	0.0	5.0	.80	2.0§	35nØ	24m	.50		0	7	F282	TO116
45	SN74LS295BN	4	1	PPS	25MØ	BTD	145m	0.0	5.0	.80	2.0§	35nØ	24m	.50		0	7	F282	TO116
46	SN74LS395AJ	4	1	PPS	25MØ	BTD	145m	0.0	5.0	.80	2.0§	35nØ	24m	.50		0	7	F283	ML61a
47	SN74LS395AN	4	1	PPS	25MØ	BTD	145m	0.0	5.0	.80	2.0§	35nØ	24m	.50		0	7	F283	ML48
48	5495ADM	4	1	PPS	25MØ	BTX	315m	0.0	5.0	.80	2.0	32n	16m	.40		5	C	F402	TO116
49	5495AFM	4	1	PPS	25MØ	BTX	315m	0.0	5.0	.80	2.0	32n	16m	.40		5	C	F402	TO86
50	7495ADC	4	1	PPS	25MØ	BTX	315m	0.0	5.0	.80	2.0	32n	16m	.40		0	7	F402	TO116
51	7495AFC	4	1	PPS	25MØ	BTX	315m	0.0	5.0	.80	2.0	32n	16m	.40		0	7	F402	TO116
52	7495APC	4	1	PPS	25MØ	BTX	315m	0.0	5.0	.80	2.0	32n	16m	.40		0	7	F402	ML233
53	54178DM	4	1	PPS	25MØ	BTX	350m	0.0	5.0	.80	2.0	36n	16m	.40		5	C	F124b	TO116
54	54178FM	4	1	PPS	25MØ	BTX	350m	0.0	5.0	.80	2.0	36n	16m	.40		5	C	F124b	TO86
55	54179DM	4	1	PPS	25MØ	BTX	350m	0.0	5.0	.80	2.0	36n	16m	.40		5	C	F124a	ML127d
56	54179FM	4	1	PPS	25MØ	BTX	350m	0.0	5.0	.80	2.0	36n	16m	.40		5	C	F124a	FL14g
57	54194DM	4	1	PPS	25MØ	BTX	315m	0.0	5.0	.80	2.0	30n	16m	.40		5	C	F245	ML127k
58	54194FM	4	1	PPS	25MØ	BTX	315m	0.0	5.0	.80	2.0	30n	16m	.40		5	C	F245	FL14g
59	74178DC	4	1	PPS	25MØ	BTX	375m	0.0	5.0	.80	2.0	36n	16m	.40		0	7	F124b	TO116
60	74178FC	4	1	PPS	25MØ	BTX	375m	0.0	5.0	.80	2.0	36n	16m	.40		0	7	F124b	TO86
61	74178PC	4	1	PPS	25MØ	BTX	375m	0.0	5.0	.80	2.0	36n	16m	.40		0	7	F124b	ML233
62	74179DC	4	1	PPS	25MØ	BTX	375m	0.0	5.0	.80	2.0	36n	16m	.40		0	7	F124b	ML127k
63	74179FC	4	1	PPS	25MØ	BTX	375m	0.0	5.0	.80	2.0	36n	16m	.40		0	7	F124b	FL14g
64	74179PC	4	1	PPS	25MØ	BTX	375m	0.0	5.0	.80	2.0	36n	16m	.40		0	7	F124b	ML170
65	74194DC	4	1	PPS	25MØ	BTX	315m	0.0	5.0	.80	2.0	30n	16m	.40		0	7	F245	ML127k
66	74194FC	4	1	PPS	25MØ	BTX	315m	0.0	5.0	.80	2.0	30n	16m	.40		0	7	F245	FL14g
67	74194PC	4	1	PPS	25MØ	BTX	315m	0.0	5.0	.80	2.0	30n	16m	.40		0	7	F245	ML170
68	AM9300DC	4	1	PPS	25M†Ø	BTX	425m	0.0	5.0	.80	2.0	45nØ	16m	.40		0	7	F2	ML127k
69	AM9300DM	4	1	PPS	25M†Ø	BTX	430m♦	0.0	5.0	.80	2.0	45nØ	16m	.40		5	C	F2	ML62c
70	AM9300FM	4	1	PPS	25M†Ø	BTX	425m♦	0.0	5.0	.80	2.0	45nØ	16m	.40		0	7	F2	FL33b
71	AM9300PC	4	1	PPS	25M†Ø	BTX	430m♦	0.0	5.0	.80	2.0	45nØ	16m	.40		5	C	F2	ML89a
72	AMU6B930051X	4	1	PPS	25M†Ø	BTX	375mØ	0.0	5.0	.90Ø	1.7	35nØ	7.4m	.40		5	C	F2	ML62
73	AMU6B930059X	4	1	PPS	25M†Ø	BTX	400mØ	0.0	5.0	.85Ø	1.8	35nØ	8.5m	.45		0	7	F2	ML62
74#	FLJ191-7495A	4	1	PPS	25M	BTX	330m	0.0	5.0	.80	2.0	32n	16m	.40		0	7	F155	ML☑
75#	FLJ195-8495A	4	1	PPS	25M	BTX	330m	0.0	5.0	.80	2.0	32n	16m	.40		2	8	F155	ML☑
76#	FLJ551-74194	4	1	PPS	25M	BTX	330m	0.0	5.0	.80	2.0	30n	16m	.40		0	7	F469	ML☑
77#	FLJ555-84194	4	1	PPS	25M	BTX	330m	0.0	5.0	.80	2.0	30n	16m	.40		2	8	F469	ML☑
78#	M53375P	4	1	PPS	25MΔ	BTX	150m	0.0	5.0	.80	2.0	35nΔ				0	7	F351	ML146
79	MC8300L	4	1	PPS	25M†	BTX	300m†	0.0	5.0	.45%	2.4	45nØ	12m	.45		0	7	F37	ML5
80	MC8300P	4	1	PPS	25M†	BTX	300m†	0.0	5.0	.45%	2.4	45nØ	12m	.45		0	7	F37	ML40a
81	MC9300L	4	1	PPS	25M†	BTX	300m†	0.0	5.0	.40%	2.4	45nØ	12m	.40		5	C	F37	ML5
82	N7495AF	4	1	PPS	25MØ	BTX	315m	0.0	5.0	.80	2.0	27n	16m	.40		0	7	F402	ML19f
83	N7495AN	4	1	PPS	25MØ	BTX	315m	0.0	5.0	.80	2.0	27n	16m	.40		0	7	F402	ML86
84▼	N74175F	4	1	PPS	25MØ	BTX	245m	0.0	5.0	.80	2.0	30n	16m	.40		0	7	F351	ML127r
85▼	N74175N	4	1	PPS	25MØ	BTX	245m	0.0	5.0	.80	2.0	30n	16m	.40		0	7	F351	MO001AE
86	N74194B	4	1	PPS	25MØ	BTX	195m†	0.0	5.0	.80	2.0	30nØ	16m	.40		0	7	F132	ML132
87	N74194F	4	1	PPS	25MØ	BTX	195m†	0.0	5.0	.80	2.0	30nØ	16m	.40		0	7	F245	ML127m
88	N74194N	4	1	PPS	25MØ	BTX	315m	0.0	5.0	.80	2.0	22n	16m	.40		0	7	F245	MO001AE
89	N74298F	4	1	PPS	25MØ	BTX	325m	0.0	5.0	.80	2.0	27n	16m	.40		0	7	F535	ML127r
90	N74298N	4	1	PPS	25MØ	BTX	325m	0.0	5.0	.80	2.0	27n	16m	.40		0	7	F535	MO001AE
91#	RC5495A	4	1	PPS	25MØ	BTX	410m	0.0	5.0	.80	2.0	32nØ	16m	.40		5	C	F36	ML86
92#	RC5495F	4	1	PPS	25MØ	BTX	410m	0.0	5.0	.80	2.0	32nØ	16m	.40		5	C	F36	ML93b
93#	RC54194B	4	1	PPS	25MØ	BTX	315m♦	0.0	5.0	.80	2.0	30nØ	16m	.40		5	C	F132	ML132
94#	RC54194F	4	1	PPS	25MØ	BTX	315m♦	0.0	5.0	.80	2.0	30nØ	16m	.40		5	C	F132	ML61d

SYMBOLS AND CODES
EXPLAINED IN INTERPRETER

7. SHIFT REGISTERS

IN ORDER OF(1)No.BITS/REG(2)No.REGISTERS (3)OP.CODE(4)MAX W/C FREQ(5)STRUCT(6)TYPE No

LINE No.	6 TYPE No.	ORGANIZATION 1 BITS PER REGISTER	ORGANIZATION 2 No. REGS	3 OPER. CODE	4 MAX WORST CASE FREQ. (Hz)	5 STRUC TURE CODE	MAX OPER. POWER DISS. (W)	RATED POWER SUP. SPAN NEG. (V)	RATED POWER SUP. SPAN POS. (V)	INPUT LOGIC LEVELS MAX '0' (V)	INPUT LOGIC LEVELS MIN '1' (V)	MAX PROP. DELAY (s)	MIN OUTPUT SINK CURRENT (A)	MIN OUTPUT SINK CURRENT @ OUT (V)	MIN CLOCK FREQ. (Hz)	OPER. TEMP. RANGE CODE -	OPER. TEMP. RANGE CODE +	DRAWINGS LOGIC/ BLOCK	DRAWINGS OUTLINE
1#	RC54194W	4	1	PPS	25MØ	BTX	315m♦	0.0	5.0	.80	2.0	30nØ	16m	.40		5	C	F132	FL25
2	S5495A	4	1	PPS	25MØ	BTX	410m	0.0	5.0	.80	2.0	32nØ	16m	.40		5	C	F36	ML86
3	S5495AF	4	1	PPS	25MØ	BTX	315m	0.0	5.0	.80	2.0	27n	16m	.40		5	C	F402	ML19f
4	S5495AW	4	1	PPS	25MØ	BTX	315m	0.0	5.0	.80	2.0	27n	16m	.40		5	C	F402	FL51
5	S5495F	4	1	PPS	25MØ	BTX	410m	0.0	5.0	.80	2.0	32nØ	16m	.40		5	C	F36	ML93b
6▼	S54175F	4	1	PPS	25MØ	BTX	245m	0.0	5.0	.80	2.0	30n	16m	.40		5	C	F351	ML127r
7▼	S54175W	4	1	PPS	25MØ	BTX	245m	0.0	5.0	.80	2.0	30n	16m	.40		5	C	F351	FL14d
8	S54194B	4	1	PPS	25MØ	BTX	315m♦	0.0	5.0	.80	2.0	30nØ	16m	.40		5	C	F132	ML132
9	S54194F	4	1	PPS	25MØ	BTX	315m♦	0.0	5.0	.80	2.0	30nØ	16m	.40		5	C	F132	ML61d
10	S54194W	4	1	PPS	25MØ	BTX	315m♦	0.0	5.0	.80	2.0	30nØ	16m	.40		5	C	F132	FL25
11	S54298F	4	1	PPS	25MØ	BTX	325m	0.0	5.0	.80	2.0	27n	16m	.40		5	C	F535	ML127r
12	S54298W	4	1	PPS	25MØ	BTX	325m	0.0	5.0	.80	2.0	27n	16m	.40		5	C	F535	FL14d
13#	SFC4175E	4	1	PPS	25MΔ	BTX	150m	0.0	5.0	.80	2.0	35nΔ				0	7	F351	ML48
14#	SFC4175EM	4	1	PPS	25MΔ	BTX	150m	0.0	5.0	.80	2.0	35nΔ				5	C	F351	ML48
15#	SFC4175ET	4	1	PPS	25MΔ	BTX	150m	0.0	5.0	.80	2.0	35nΔ				2	8	F351	ML48
16	SN5495AJ	4	1	PPS	25MØ	BTX	195m†	0.0	5.0	.80	2.0	32nØ	16m	.40		5	C	F155	ML66b
17	SN5495AW	4	1	PPS	25MØ	BTX	195m†	0.0	5.0	.80	2.0	32nØ	16m	.40		5	C	F155	ML66b
18	SN7495AJ	4	1	PPS	25MØ	BTX	195m†	0.0	5.0	.80	2.0	32nØ	16m	.40		0	7	F155	ML66b
19	SN7495AN	4	1	PPS	25MØ	BTX	195m†	0.0	5.0	.80	2.0	32nØ	16m	.40		0	7	F155	ML66b
20	SN54175J	4	1	PPS	25MΔ	BTX	225m	0.0	5.0	.80	2.0	35n	16m	.40		5	C	F351	ML61a
21	SN54175W	4	1	PPS	25MΔ	BTX	225m	0.0	5.0	.80	2.0	35n	16m	.40		5	C	F351	MO004AC
22	SN54178J	4	1	PPS	25MØ	BTX	230m†	0.0	5.0	.80	2.0	36n	16m	.40		5	C	F191	ML66a
23	SN54178W	4	1	PPS	25MØ	BTX	230m†	0.0	5.0	.80	2.0	36n	16m	.40		5	C	F191	MO004AA
24	SN54179J	4	1	PPS	25MØ	BTX	230m†	0.0	5.0	.80	2.0	36n	16m	.40		5	C	F191a	ML61a
25	SN54179W	4	1	PPS	25MØ	BTX	230m†	0.0	5.0	.80	2.0	36n	16m	.40		5	C	F191a	MO004AC
26	SN54194J	4	1	PPS	25MØ	BTX	195m†	0.0	5.0	.80	2.0	30nØ	16m	.40		5	C	F89a	ML61a
27	SN54194W	4	1	PPS	25MØ	BTX	195m†	0.0	5.0	.80	2.0	30nØ	16m	.40		5	C	F89a	MO004AC
28	SN74175J	4	1	PPS	25MΔ	BTX	225m	0.0	5.0	.80	2.0	35n	16m	.40		0	7	F351	ML61a
29	SN74175N	4	1	PPS	25MΔ	BTX	225m	0.0	5.0	.80	2.0	35n	16m	.40		0	7	F351	ML48
30	SN74178J	4	1	PPS	25MØ	BTX	230m†	0.0	5.0	.80	2.0	36n	16m	.40		0	7	F191	ML66a
31	SN74178N	4	1	PPS	25MØ	BTX	230m†	0.0	5.0	.80	2.0	36n	16m	.40		0	7	F191	ML71
32	SN74179J	4	1	PPS	25MØ	BTX	230m†	0.0	5.0	.80	2.0	36n	16m	.40		0	7	F191a	ML61a
33	SN74179N	4	1	PPS	25MØ	BTX	230m†	0.0	5.0	.80	2.0	36n	16m	.40		0	7	F191a	ML48
34	SN74194J	4	1	PPS	25MØ	BTX	195m†	0.0	5.0	.80	2.0	30nØ	16m	.40		0	7	F89a	ML61a
35	SN74194N	4	1	PPS	25MØ	BTX	195m†	0.0	5.0	.80	2.0	30nØ	16m	.40		0	7	F89a	ML48
36	TMSR4A	4	1	PPS§	25MΔ	BTXØ	250m	0.0	5.0	.22†	3.3†	35n				0	7	F342	
37#	ZN5495AJ	4	1	PPS	25MØ	BTX	195m†	0.0	5.0	.80	2.0	32nØ	16m	.40		5	C	PN14x	ML64f
38#	ZN7495AE	4	1	PPS	25MØ	BTX	195m†	0.0	5.0	.80	2.0	32nØ	16m	.40		0	7	PN14x	ML71e
39#	ZN7495AJ	4	1	PPS	25MØ	BTX	195m†	0.0	5.0	.80	2.0	32nØ	16m	.40		0	7	PN14x	ML64f
40#	ZN54175E	4	1	PPS	25MΔ	BTX	225m	0.0	5.0	.80	2.0	35nΔ				5	C	F351	TO116
41#	ZN54175J	4	1	PPS	25MΔ	BTX	225m	0.0	5.0	.80	2.0	35nΔ				5	C	F351	ML93e
42#	ZN54194E	4	1	PPS	25MØ	BTX	195m†	0.0	5.0	.80	2.0	30nØ	16m	.40		5	C	PN16fi	ML5f
43#	ZN54194J	4	1	PPS	25MØ	BTX	195m†	0.0	5.0	.80	2.0	30nØ	16m	.40		5	C	PN16fi	ML85b
44#	ZN74175E	4	1	PPS	25MΔ	BTX	225m	0.0	5.0	.80	2.0	35nΔ				0	7	F351	TO116
45#	ZN74175J	4	1	PPS	25MΔ	BTX	225m	0.0	5.0	.80	2.0	35nΔ				0	7	F351	ML93e
46#	ZN74194E	4	1	PPS	25MØ	BTX	195m†	0.0	5.0	.80	2.0	30nØ	16m	.40		0	7	PN16fi	ML5f
47#	ZN74194J	4	1	PPS	25MØ	BTX	195m†	0.0	5.0	.80	2.0	30nØ	16m	.40		0	7	PN16fi	ML85b
48	SN54LS95AJ	4	1	PPS	28M†Ø	BTX	85m	0.0	5.0	.70	2.0	48nØ	4.0m	.40		5	C	F70	ML66
49	SN54LS95AW	4	1	PPS	28M†Ø	BTX	85m	0.0	5.0	.70	2.0	48nØ	4.0m	.40		5	C	F70	MO004AA
50	SN74LS95AJ	4	1	PPS	28M†Ø	BTX	85m	0.0	5.0	.80	2.0	48nØ	8.0m	.50		0	7	F70	ML66a
51	SN74LS95AN	4	1	PPS	28M†Ø	BTX	85m	0.0	5.0	.80	2.0	48nØ	8.0m	.50		0	7	F70	ML71
52	SN74LS95AW	4	1	PPS	28M†Ø	BTX	85m	0.0	5.0	.80	2.0	48nØ	8.0m	.50		0	7	F70	MO004AA
53	54LS95BDM	4	1	PPS	30M*Ø	BTD	115m	0.0	5.0	.70	2.0	27n	4.0m	.40		5	C	F402	TO116
54	54LS95BFM	4	1	PPS	30M*Ø	BTD	115m	0.0	5.0	.70	2.0	27n	4.0m	.40		5	C	F402	TO86
55	54LS194ADM	4	1	PPS§	30M*Ø	BTD	115m	0.0	5.0	.70	2.0	26n	4.0m	.40		5	C	F245	ML127k
56	54LS194AFM	4	1	PPS§	30M*Ø	BTD	115m	0.0	5.0	.70	2.0	26n	4.0m	.40		5	C	F245	FL14g
57	54LS194AJ	4	1	PPS	30MØ	BTD	115m	0.0	5.0	.70	2.0	30nØ	4.0m	.40		5	C	F245	MLØ
58	54LS194AW	4	1	PPS	30MØ	BTD	115m	0.0	5.0	.70	2.0	30nØ	4.0m	.40		5	C	F245	FL14h
59	54LS195ADM	4	1	PPS§	30M*Ø	BTD	115m♦	0.0	5.0	.70	2.0	26n	4.0m	.40		5	C	F246	ML127k
60	54LS195AFM	4	1	PPS§	30M*Ø	BTD	115m♦	0.0	5.0	.70	2.0	26n	4.0m	.40		5	C	F246	FL14g
61	54LS195AJ	4	1	PPS	30MØ	BTD	105m♦	0.0	5.0	.70	2.0	33nØ	4.0m	.40		5	C	F108	MLØ
62	54LS195AW	4	1	PPS	30MØ	BTD	105m♦	0.0	5.0	.70	2.0	33nØ	4.0m	.40		5	C	F108	FL14h
63	54LS295ADM	4	1	PPS	30M*Ø	BTD	125m	0.0	5.0	.70	2.0§	30n	4.0m	.40		5	C	F282	TO116
64	54LS295AFM	4	1	PPS	30M*Ø	BTD	125m	0.0	5.0	.70	2.0§	30n	4.0m	.40		5	C	F282	TO86
65	54LS295AJ	4	1	PPS	30MØ	BTD	125m♦	0.0	5.0	.70	2.0§	45nØ	4.0m	.40		5	C	F282	ML63c
66	54LS295AW	4	1	PPS	30MØ	BTD	125m♦	0.0	5.0	.70	2.0§	45nØ	4.0m	.40		5	C	F282	FL11c
67	54LS379DM	4	1	PPS	30MØ	BTD	90m	0.0	5.0	.70	2.0	22nØ	4.0m	.40		5	C	F452	ML157e
68	54LS379FM	4	1	PPS	30MØ	BTD	90m	0.0	5.0	.70	2.0	22nØ	4.0m	.40		5	C	F452	FL14j
69	54LS395DM	4	1	PPS	30MΔ	BTD	145m	0.0	5.0	.70	2.0§	35n	4.0m	.40		5	C	F483	ML157e
70	54LS395FM	4	1	PPS	30MΔ	BTD	145m	0.0	5.0	.70	2.0§	35n	4.0m	.40		5	C	F483	FL14j
71	74LS95BDC	4	1	PPS	30M*Ø	BTD	105m	0.0	5.0	.80	2.0	27n	4.0m	.40		0	7	F402	TO116
72	74LS95BFC	4	1	PPS	30M*Ø	BTD	105m	0.0	5.0	.80	2.0	27n	4.0m	.40		0	7	F402	TO86
73	74LS95BPC	4	1	PPS	30M*Ø	BTD	105m	0.0	5.0	.80	2.0	27n	4.0m	.40		0	7	F402	ML233
74	74LS194ADC	4	1	PPS	30M*Ø	BTD	115m	0.0	5.0	.80	2.0	26n	4.0m	.40		0	7	F245	ML127k
75	74LS194AFC	4	1	PPS	30M*Ø	BTD	115m	0.0	5.0	.80	2.0	26n	4.0m	.40		0	7	F245	FL14g
76	74LS194AJ	4	1	PPS	30MØ	BTD	115m	0.0	5.0	.80	2.0	30nØ	4.0m	.40		0	7	F245	MLØ
77	74LS194APC	4	1	PPS	30M*Ø	BTD	115m	0.0	5.0	.80	2.0	26n	4.0m	.40		0	7	F245	ML170
78	74LS194AW	4	1	PPS	30MØ	BTD	115m	0.0	5.0	.80	2.0	30nØ	4.0m	.40		0	7	F245	FL14h
79	74LS195ADC	4	1	PPS	30M*Ø	BTD	105m	0.0	5.0	.80	2.0	26n	4.0m	.40		0	7	F246	ML127k
80	74LS195AFC	4	1	PPS	30M*Ø	BTD	105m	0.0	5.0	.80	2.0	26n	4.0m	.40		0	7	F246	FL14g
81	74LS195AJ	4	1	PPS	30MØ	BTD	105m♦	0.0	5.0	.80	2.0	33nØ	4.0m	.40		0	7	F108	MLØ
82	74LS195APC	4	1	PPS	30M*Ø	BTD	105m	0.0	5.0	.80	2.0	26n	4.0m	.40		0	7	F246	ML170
83	74LS195AW	4	1	PPS	30MØ	BTD	105m♦	0.0	5.0	.80	2.0	33nØ	4.0m	.40		0	7	F108	FL14h
84	74LS295ADC	4	1	PPS	30M*Ø	BTD	125m	0.0	5.0	.80	2.0§	30n	4.0m	.40		0	7	F282	TO116
85	74LS295AFC	4	1	PPS	30M*Ø	BTD	125m	0.0	5.0	.80	2.0§	30n	4.0m	.40		0	7	F282	TO86
86	74LS295AJ	4	1	PPS	30MØ	BTD	125m♦	0.0	5.0	.80	2.0§	45nØ	4.0m	.40		0	7	F282	ML63c
87	74LS295APC	4	1	PPS	30M*Ø	BTD	125m	0.0	5.0	.80	2.0§	30n	4.0m	.40		0	7	F282	ML233
88	74LS295AW	4	1	PPS	30MØ	BTD	125m♦	0.0	5.0	.80	2.0§	45nØ	4.0m	.40		0	7	F282	FL11c
89	74LS379DC	4	1	PPS	30MØ	BTD	90m	0.0	5.0	.80	2.0	22nØ	8.0m	.50		0	7	F452	ML157e
90	74LS379FC	4	1	PPS	30MØ	BTD	90m	0.0	5.0	.80	2.0	22nØ	8.0m	.50		0	7	F452	FL14j
91	74LS379PC	4	1	PPS	30MØ	BTD	90m	0.0	5.0	.80	2.0	22nØ	8.0m	.50		0	7	F452	ML170
92	74LS395DC	4	1	PPS	30MΔ	BTD	145m	0.0	5.0	.80	2.0§	35n	8.0m	.50		0	7	F483	ML157e
93	74LS395FC	4	1	PPS	30MΔ	BTD	145m	0.0	5.0	.80	2.0§	35n	8.0m	.50		0	7	F483	FL14j
94	74LS395PC	4	1	PPS	30MΔ	BTD	145m	0.0	5.0	.80	2.0§	35n	8.0m	.50		0	7	F483	ML170
95▼#	HD74LS195A	4	1	PPS	30MΔ	BTD	105m	0.0	5.0	.80	2.0	30n	8.0m#	.50	30M	2	7	F192	ML389m
96▼#	HD74LS195AP	4	1	PPS	30MΔ	BTD	105m	0.0	5.0	.80	2.0	30n	8.0m#	.50	30M	2	7	F192	ML394
97#	M74LS173AP	4	1	PPS	30MΔ	BTD		0.0	5.0	.80	2.0§	30n	12m	.40		2	7	F482	ML409
98#	M74LS173P	4	1	PPS	30MΔ	BTD	140m	0.0	5.0	0.8	2.0	40n	8.0m	0.5		0	7	F482	ML409
99#	M74LS395P	4	1	PPS	30MΔ	BTD	145m	0.0	5.0	0.8	2.0	35n	8.0m	0.5		0	7	F483	ML409
100	N74LS195AF	4	1	PPS	30MØ	BTD	105m	0.0	5.0	.80	2.0	22n	16m	.40		0	7	F108	ML127r
101	N74LS195AN	4	1	PPS	30MØ	BTD	105m	0.0	5.0	.80	2.0	22n	16m	.40		0	7	F108	MO001AE
102	N74LS295BF	4	1	PPS	30MØ	BTD	145m	0.0	5.0	.80	2.0§	23n	12m	.40		0	7	F282	ML19f
103	N74LS295BN	4	1	PPS	30MØ	BTD	145m	0.0	5.0	.80	2.0§	23n	12m	.40		0	7	F282	ML86
104▼	N74LS379F	4	1	PPS	30MØ	BTD	75m	0.0	5.0	.80	2.0	27n	16m	.40		0	7	F537	ML127r
105▼	N74LS379N	4	1	PPS	30MØ	BTD	75m	0.0	5.0	.80	2.0	27n	16m	.40		0	7	F537	MO001AE
106	N74LS395AF	4	1	PPS	30MØ	BTD	170m	0.0	5.0	.80	2.0	30n	24m	.50		0	7		ML127r
107	N74LS395AN	4	1	PPS	30MØ	BTD	170m	0.0	5.0	.80	2.0	30n	24m	.50		0	7	F283	MO001AE
108	S54LS195AF	4	1	PPS	30MØ	BTD	105m	0.0	5.0	.80	2.0	22n	16m	.40		5	C	F108	ML127r
109	S54LS195AW	4	1	PPS	30MØ	BTD	105m	0.0	5.0	.80	2.0	22n	16m	.40		5	C	F108	FL14d
110	S54LS295BF	4	1	PPS	30MØ	BTD	145m	0.0	5.0	.80	2.0§	23n	24m	.50		5	C	F282	ML19f

SYMBOLS AND CODES EXPLAINED IN INTERPRETER

7. SHIFT REGISTERS

IN ORDER OF(1)No.BITS/REG(2)No.REGISTERS
(3)OP.CODE(4)MAX W/C FREQ(5)STRUCT(6)TYPE No

LINE No.	6 TYPE No.	ORGANIZATION 1 BITS PER REGISTER	ORGANIZATION 2 No. REGS	3 OPER. CODE	4 MAX WORST CASE FREQ. (Hz)	5 STRUCTURE CODE	MAX OPER. POWER DISS. (W)	RATED POWER SUP. SPAN NEG. (V)	RATED POWER SUP. SPAN POS. (V)	INPUT LOGIC LEVELS MAX '0' (V)	INPUT LOGIC LEVELS MIN '1' (V)	MAX PROP. DELAY (s)	MIN OUTPUT SINK CURRENT (A)	MIN OUTPUT SINK CURRENT @ OUT (V)	MIN CLOCK FREQ. (Hz)	OPER. TEMP. RANGE CODE -	OPER. TEMP. RANGE CODE +	DRAWINGS LOGIC/ BLOCK	DRAWINGS OUTLINE
1	S54LS295BW	4	1	PPS	30MØ	BTD	145m	0.0	5.0	.80	2.0§	23n	24m	.50		5	C	F282	FL51
2▼	S54LS379F	4	1	PPS	30MØ	BTD	75m	0.0	5.0	.80	2.0	27n	16m	.40		5	C	F537	ML127r
3▼	S54LS379W	4	1	PPS	30MØ	BTD	75m	0.0	5.0	.80	2.0	27n	16m	.40		5	C	F537	FL14d
4	S54LS395AF	4	1	PPS	30MØ	BTD	170m	0.0	5.0	.80	2.0	30n	12m	.40		5	C		ML127r
5	S54LS395AW	4	1	PPS	30MØ	BTD	170m	0.0	5.0	.80	2.0	30n	12m	.40		5	C		FL14d
6♦	SN54LS95BJ	4	1	PPS	30MØ	BTD	65m†	0.0	5.0	.70	2.0	32nØ	4.0m	.40		5	C	F155	MO01AA
7♦	SN54LS95BW	4	1	PPS	30MØ	BTD	65m†	0.0	5.0	.70	2.0	32nØ	4.0m	.40		5	C	F155	MO004AA
8♦	SN54LS175J	4	1	PPS	30MØ	BTD	90m	0.0	5.0	.80	2.0	35n	4.0m	.40		5	C	F351	ML61a
9♦	SN54LS175W	4	1	PPS	30MØ	BTD	90m	0.0	5.0	.80	2.0	35n	4.0m	.40		5	C	F351	MO004AC
10♦	SN54LS194AJ	4	1	PPS	30MØ	BTD	115m	0.0	5.0	.70	2.0	30nØ	4.0m	.40		5	C	F245	ML61a
11♦	SN54LS194AW	4	1	PPS	30MØ	BTD	115m	0.0	5.0	.70	2.0	30nØ	4.0m	.40		5	C	F245	MO004AC
12	SN54LS195AJ	4	1	PPS	30MØ	BTD	70m†	0.0	5.0	.70	2.0	30nØ	4.0m	.40		5	C	F108	ML331
13♦	SN54LS195AW	4	1	PPS	30MØ	BTD	70m†	0.0	5.0	.70	2.0	30nØ	4.0m	.40		5	C	F108	MO004AC
14♦	SN54LS295AJ	4	1	PPS	30MØ	BTD	125m	0.0	5.0	.70	2.0§	30nØ	4.0m	.40		5	C	F282	MO001AA
15♦	SN54LS295AW	4	1	PPS	30MØ	BTD	125m	0.0	5.0	.70	2.0§	30nØ	4.0m	.40		5	C	F282	MO004AA
16♦	SN54LS379J	4	1	PPS	30MØ	BTD	75m	0.0	5.0	.70	2.0	22nØ	4.0m	.40		5	C	F452	ML61a
17♦	SN54LS379W	4	1	PPS	30MØ	BTD	75m	0.0	5.0	.70	2.0	22nØ	4.0m	.40		5	C	F452	MO004AC
18♦	SN54LS395J	4	1	PPS	30MØ	BTD	145m	0.0	5.0	.70	2.0§	32nØ	4.0m	.40		5	C	F283	ML61a
19♦	SN54LS395W	4	1	PPS	30MØ	BTD	145m	0.0	5.0	.70	2.0§	32nØ	4.0m	.40		5	C	F283	MO004AC
20♦	SN74LS95BJ	4	1	PPS	30MØ	BTD	65m†	0.0	5.0	.80	2.0	32nØ	4.0m	.40		0	7	F155	MO001AA
21♦	SN74LS95BN	4	1	PPS	30MØ	BTD	65m†	0.0	5.0	.80	2.0	32nØ	4.0m	.40		0	7	F155	MO001AA
22♦	SN74LS95BW	4	1	PPS	30MØ	BTD	65m†	0.0	5.0	.80	2.0	27nØ	4.0m	.40		0	7	F155	MO004AA
23♦	SN74LS175J	4	1	PPS	30MØ	BTD	90m	0.0	5.0	.80	2.0	35n	8.0m	.50		0	7	F351	ML61a
24♦	SN74LS175N	4	1	PPS	30MØ	BTD	90m	0.0	5.0	.80	2.0	35n	8.0m	.50		0	7	F351	ML209
25♦	SN74LS175W	4	1	PPS	30MØ	BTD	90m	0.0	5.0	.80	2.0	28n	8.0m	.50		0	7	F351	MO004AC
26♦	SN74LS194AJ	4	1	PPS	30MØ	BTD	115m	0.0	5.0	.80	2.0	30nØ	4.0m	.40		0	7	F245	ML61a
27♦	SN74LS194AN	4	1	PPS	30MØ	BTD	115m	0.0	5.0	.80	2.0	30nØ	4.0m	.40		0	7	F245	ML209
28	SN74LS194AW	4	1	PPS	30MØ	BTD	115m	0.0	5.0	.80	2.0	26nØ	4.0m	.40		0	7	F245	FL63
29♦	SN74LS195AJ	4	1	PPS	30MØ	BTD	70m†	0.0	5.0	.80	2.0	30nØ	4.0m	.40		0	7	F108	ML61aa
30♦	SN74LS195AN	4	1	PPS	30MØ	BTD	70m†	0.0	5.0	.80	2.0	30nØ	4.0m	.40		0	7	F108	ML209
31♦	SN74LS195AW	4	1	PPS	30MØ	BTD	70m†	0.0	5.0	.80	2.0	26nØ	4.0m	.40		0	7	F108	MO004AC
32♦	SN74LS295AJ	4	1	PPS	30MØ	BTD	125m	0.0	5.0	.80	2.0§	30nØ	4.0m	.40		0	7	F282	MO001AA
33♦	SN74LS295AN	4	1	PPS	30MØ	BTD	125m	0.0	5.0	.80	2.0§	30nØ	4.0m	.40		0	7	F282	MO001AA
34♦	SN74LS295AW	4	1	PPS	30MØ	BTD	125m	0.0	5.0	.80	2.0§	30nØ	4.0m	.40		0	7	F282	MO004AA
35♦	SN74LS379J	4	1	PPS	30MØ	BTD	75m	0.0	5.0	.80	2.0	22nØ	8.0m	.50		0	7	F452	ML61a
36♦	SN74LS379N	4	1	PPS	30MØ	BTD	75m	0.0	5.0	.80	2.0	22nØ	8.0m	.50		0	7	F452	ML209
37	SN74LS379W	4	1	PPS	30MØ	BTD	90m	0.0	5.0	.80	2.0	22nØ	8.0m	.50		0	7	F452	FL63
38♦	SN74LS395J	4	1	PPS	30MØ	BTD	145m	0.0	5.0	.80	2.0§	32nØ	4.0m	.40		0	7	F283	ML61a
39♦	SN74LS395N	4	1	PPS	30MØ	BTD	145m	0.0	5.0	.80	2.0§	32nØ	4.0m	.40		0	7	F283	ML209
40	SN74LS395W	4	1	PPS	30MØ	BTD	145m	0.0	5.0	.80	2.0§	35nØ	4.0m	.40		0	7	F283	FL63
41	9300DC	4	1	PPS	30MØ	BTX	460m	0.0	5.0	.80	2.0	40n	12m	.40		0	7	F2	ML127k
42	9300DM	4	1	PPS	30MØ	BTX	430m	0.0	5.0	.80	2.0	40n	12m	.40		5	C	F2	ML127k
43	9300FC	4	1	PPS	30MØ	BTX	460m	0.0	5.0	.80	2.0	40n	12m	.40		0	7	F2	FL14g
44	9300FM	4	1	PPS	30MØ	BTX	430m	0.0	5.0	.80	2.0	40n	12m	.40		5	C	F2	FL14g
45	9300PC	4	1	PPS	30MØ	BTX	460m	0.0	5.0	.80	2.0	40n	12m	.40		0	7	F2	ML170
46	54195DM	4	1	PPS	30MØ	BTX	315m	0.0	5.0	.80	2.0	30n	16m	.40		5	C	F246	ML127k
47	54195FM	4	1	PPS	30MØ	BTX	315m	0.0	5.0	.80	2.0	30n	16m	.40		5	C	F246	FL14g
48	74195DC	4	1	PPS	30MØ	BTX	315m	0.0	5.0	.80	2.0	30n	16m	.40		0	7	F246	ML127k
49	74195FC	4	1	PPS	30MØ	BTX	315m	0.0	5.0	.80	2.0	30n	16m	.40		0	7	F246	FL14g
50	74195PC	4	1	PPS	30MØ	BTX	315m	0.0	5.0	.80	2.0	30n	16m	.40		0	7	F246	ML170
51#	FLJ561-74195	4	1	PPS	30M	BTX	330m	0.0	5.0	.80	2.0	30n	16m	.40		0	7	F108	ML☑
52#	FLJ565-84195	4	1	PPS	30M	BTX	330m	0.0	5.0	.80	2.0	30n	16m	.40		2	8	F108	ML☑
53	MC54195L	4	1	PPS	30MΔ	BTX	195m†	0.0	5.0	.40%	2.4	30n	16m	.40		5	C	F108	ML127b
54	MC74195L	4	1	PPS	30MΔ	BTX	195m†	0.0	5.0	.40%	2.4	30n	16m	.40		0	7	F108	ML127b
55▼	N74LS175B	4	1	PPS	30M*Δ	BTX	75m†	0.0	5.0	.80	2.0	23n				0	7	F351	ML132
56▼	N74LS175F	4	1	PPS	30M*Δ	BTX	75m†	0.0	5.0	.80	2.0	23n				0	7	F351	ML127m
57	N74S195B	4	1	PPS	30MØ	BTX	315m♦	0.0	5.0	.80	2.0	30n	16m	.40		0	7	F108	ML132
58	N74S195J	4	1	PPS	30MØ	BTX	315m♦	0.0	5.0	.80	2.0	30n	16m	.40		0	7	F108	ML107
59	N74S195W	4	1	PPS	30MØ	BTX	315m♦	0.0	5.0	.80	2.0	30n	16m	.40		0	7	F108	FL25
60#	N9300F	4	1	PPS§	30MØ	BTX	644m	0.0	5.0	.80	2.0	37n	16m	.40		0	7	F2	ML60a
61#	N9300N	4	1	PPS§	30MØ	BTX	644m	0.0	5.0	.80	2.0	37n	16m	.40		0	7	F2	ML132
62	N74195B	4	1	PPS	30MØ	BTX	195m†	0.0	5.0	.80	2.0	30nØ	16m	.40		0	7	F108	ML132
63	N74195F	4	1	PPS	30M	BTX	195m†	0.0	5.0	.80	2.0	30nØ	16m	.40		0	7	F108	ML127m
64	N74195N	4	1	PPS	30MØ	BTX	315m	0.0	5.0	.80	2.0	22n	16m	.40		0	7	F108	MO001AE
65▼#	RC54LS175B	4	1	PPS	30M*Δ	BTX	75m†	0.0	5.0	.80	2.6	23n				5	C	F351	ML132
66▼#	RC54LS175F	4	1	PPS	30M*Δ	BTX	75m†	0.0	5.0	.80	2.6	23n				5	C	F351	ML127m
67▼#	RC54LS175W	4	1	PPS	30M*Δ	BTX	75m†	0.0	5.0	.80	2.6	23n				5	C	F351	
68▼#	RC54S195J	4	1	PPS	30MΔ	BTX	315m♦	0.0	5.0	.80	2.6	30nØ	16m	.40		5	C	F108	ML132
69#	RC54S195W	4	1	PPS	30MΔ	BTX	315m♦	0.0	5.0	.80	2.0	30nØ	16m	.40		5	C	F108	FL25
70#	RC54195B	4	1	PPS	30MØ	BTX	195m†	0.0	5.0	.80	2.0	30nØ	16m	.40		5	C	F108	ML132
71#	RC54195F	4	1	PPS	30MØ	BTX	195m†	0.0	5.0	.80	2.0	30nØ	16m	.40		5	C	F108	ML61d
72#	RC54195W	4	1	PPS	30MØ	BTX	195m†	0.0	5.0	.80	2.0	30nØ	16m	.40		5	C	F108	FL25
73▼	S54LS175B	4	1	PPS	30M*Δ	BTX	75m†	0.0	5.0	.80	2.0	23n				5	C	F351	ML132
74▼	S54LS175F	4	1	PPS	30M*Δ	BTX	75m†	0.0	5.0	.80	2.0	23n				5	C	F351	ML127m
75▼	S54LS175W	4	1	PPS	30M*Δ	BTX	75m†	0.0	5.0	.80	2.0	23n				5	C	F351	
76	S54S195J	4	1	PPS	30MΔ	BTX	315m♦	0.0	5.0	.80	2.0	30nØ	16m	.40		5	C	F108	ML132
77	S54S195W	4	1	PPS	30MΔ	BTX	315m♦	0.0	5.0	.80	2.0	30nØ	16m	.40		5	C	F108	FL25
78#	S9300F	4	1	PPS§	30MØ	BTX	602m	0.0	5.0	.80	2.0	37n	16m	.40		5	C	F2	ML60a
79#	S9300W	4	1	PPS§	30MØ	BTX	602m	0.0	5.0	.80	2.0	37n	16m	.40		5	C	F2	FL25
80	S54195B	4	1	PPS	30MØ	BTX	195m†	0.0	5.0	.80	2.0	30nØ	16m	.40		5	C	F108	ML132
81	S54195F	4	1	PPS	30MØ	BTX	195m†	0.0	5.0	.80	2.0	30nØ	16m	.40		5	C	F108	ML61d
82	S54195W	4	1	PPS	30M	BTX	195m†	0.0	5.0	.80	2.0	30nØ	16m	.40		5	C	F108	FL25
83	SN54195J	4	1	PPS	30MØ	BTX	195m†	0.0	5.0	.80	2.0	30nØ	16m	.40		5	C	F108	ML61a
84	SN54195N	4	1	PPS	30MØ	BTX	195m	0.0	5.0	.80	2.0	30nØ	16m	.40		5	C	F108	ML209
85	SN54195W	4	1	PPS	30MØ	BTX	195m†	0.0	5.0	.80	2.0	30nØ	16m	.40		5	C	F108	MO004AC
86	SN54376J	4	1	PPS	30MØ	BTX	370m	0.0	5.0	.80	2.0	35n	16m	.40		5	C	F357	ML61a
87	SN54376W	4	1	PPS	30MØ	BTX	370m	0.0	5.0	.80	2.0	35n	16m	.40		5	C	F357	MO004AC
88	SN74195J	4	1	PPS	30MØ	BTX	195m†	0.0	5.0	.80	2.0	30nØ	16m	.40		0	7	F108	ML61a
89	SN74195N	4	1	PPS	30MØ	BTX	195m†	0.0	5.0	.80	2.0	30nØ	16m	.40		0	7	F108	ML48
90	SN74195W	4	1	PPS	30MØ	BTX	195m	0.0	5.0	.80	2.0	30nØ	16m	.40		0	7	F108	
91	SN74376J	4	1	PPS	30MØ	BTX	370m	0.0	5.0	.80	2.0	35n	16m	.40		0	7	F357	ML61a
92	SN74376N	4	1	PPS	30MØ	BTX	370m	0.0	5.0	.80	2.0	35n	16m	.40		0	7	F357	ML48
93	MC5495F	4	1	PPS	31M†	BTX	250m†	0.0	5.0	.40%	2.4	35nØ	10m	.40		5	C	F36	TO86
94	MC5495L	4	1	PPS	31M†	BTX	250m†	0.0	5.0	.40%	2.4	35nØ	10m	.40		5	C	F36	ML66
95	MC7495L	4	1	PPS	31M†	BTX	250m†	0.0	5.0	.40%	2.4	35nØ	10m	.40		0	7	F36	ML66
96	54LS175J	4	1	PPS	35MØ	BTD	90m♦	0.0	5.0	.70	2.0	25nØ	4.0m	.40		5	C	F351	ML☑
97	54LS175W	4	1	PPS	35MØ	BTD	90m♦	0.0	5.0	.70	2.0	25nØ	4.0m	.40		5	C	F351	FL14h
98	AM25LS194ADC	4	1	PPS	35M	BTD	115m	0.0	5.0	.80	2.0	21n	8.0m	.45		0	7	F245	ML127k
99	AM25LS194ADM	4	1	PPS	35M	BTD	115m	0.0	5.0	.70	2.0	21n	8.0m	.45		5	C	F245	ML62c
100	AM25LS194AFM	4	1	PPS	35M	BTD	115m	0.0	5.0	.70	2.0	21n	8.0m	.45		5	C	F245	FL33b
101	AM25LS194APC	4	1	PPS	35M	BTD	115m	0.0	5.0	.80	2.0	21n	8.0m	.45		0	7	F245	ML89a
102	AM25LS195ADC	4	1	PPS	35M	BTD	105m	0.0	5.0	.80	2.0	21n	8.0m	.45		0	7	F108	ML127k
103	AM25LS195ADM	4	1	PPS	35M	BTD	105m	0.0	5.0	.70	2.0	21n	8.0m	.45		5	C	F108	ML62c
104	AM25LS195AFM	4	1	PPS	35M	BTD	105m	0.0	5.0	.70	2.0	21n	8.0m	.45		5	C	F108	FL33b
105	AM25LS195APC	4	1	PPS	35M	BTD	105m	0.0	5.0	.80	2.0	21n	8.0m	.45		0	7	F108	ML89a
106▼	N74LS175N	4	1	PPS	35MØ	BTD	90m	0.0	5.0	.80	2.0	22n	16m	.40		0	7	F351	MO001AE
107	MC4012L	4	1	PPS	35M%†	BTX	180m†	0.0	5.0	.90	1.8	25n†	16m	.40		0	7	F31	ML66
108	MC4012P	4	1	PPS	35M%†	BTX	180m†	0.0	5.0	.90	1.8	25n†	16m	.40		0	7	F31	ML38
109#	uPB74175C	4	1	PPS	35MΔØ	BTX	225m♦	0.0	5.0	.80	2.0	35nØ	16m	.40		0	7	F406	ML127s
110	N7495F	4	1	PPS	36M†	BTX	315m♦	0.0	5.0	.80	2.0	32n	16m	.40				F36	ML93b

SYMBOLS AND CODES
EXPLAINED IN INTERPRETER

7. SHIFT REGISTERS

IN ORDER OF(1)No.BITS/REG(2)No.REGISTERS (3)OP.CODE(4)MAX W/C FREQ(5)STRUCT(6)TYPE No

LINE No.	6 TYPE No.	ORGANIZATION 1 BITS PER REGISTER	ORGANIZATION 2 No. REGS	3 OPER. CODE	4 MAX WORST CASE FREQ. (Hz)	5 STRUC TURE CODE	MAX OPER. POWER DISS. (W)	RATED POWER SUP. SPAN NEG. (V)	RATED POWER SUP. SPAN POS. (V)	INPUT LOGIC LEVELS MAX '0' (V)	INPUT LOGIC LEVELS MIN '1' (V)	MAX PROP. DELAY (s)	MIN OUTPUT SINK CURRENT (A)	MIN OUTPUT SINK CURRENT @ OUT (V)	MIN CLOCK FREQ. (Hz)	OPER. TEMP. RANGE CODE -	OPER. TEMP. RANGE CODE +	DRAWINGS LOGIC/ BLOCK	DRAWINGS OUTLINE
1#	uPB74195C	4	1	PPS	39MΔØ	BTX	315m♦	0.0	5.0	.80	2.0	30nØ	16m	.40		0	7	F421	MLØ
2	9LS95DC	4	1	PPS	40MtØ	BTD	110m♦	0.0	5.0	.80	2.0	27n	4.0m	.40		0	7	F402	TO116
3	9LS95DM	4	1	PPS	40MtØ	BTD	115m♦	0.0	5.0	.70	2.0	27n	4.0m	.40		5	C	F402	TO116
4	9LS95FC	4	1	PPS	40MtØ	BTD	110m♦	0.0	5.0	.80	2.0	27n	4.0m	.40		0	7	F402	TO86
5	9LS95FM	4	1	PPS	40MtØ	BTD	115m♦	0.0	5.0	.70	2.0	27n	4.0m	.40		5	C	F402	TO86
6	9LS95PC	4	1	PPS	40MtØ	BTD	110m♦	0.0	5.0	.80	2.0	27n	4.0m	.40		0	7	F402	ML233
7	9LS194DC	4	1	PPS	40MtØ	BTD	120m♦	0.0	5.0	.80	2.0	22n	4.0m	.40		0	7	F245	ML127s
8	9LS194DM	4	1	PPS	40MtØ	BTD	126m♦	0.0	5.0	.70	2.0	22n	4.0m	.40		5	C	F245	ML127s
9	9LS194FC	4	1	PPS	40MtØ	BTD	120m♦	0.0	5.0	.80	2.0	22n	4.0m	.40		0	7	F245	FL14g
10	9LS194FM	4	1	PPS	40MtØ	BTD	126m♦	0.0	5.0	.70	2.0	22n	4.0m	.40		5	C	F245	FL14g
11	9LS194PC	4	1	PPS	40MtØ	BTD	120m♦	0.0	5.0	.80	2.0	22n	4.0m	.40		0	7	F245	ML170
12	9LS195DC	4	1	PPS	40MtØ	BTD	110m♦	0.0	5.0	.80	2.0	21n	4.0m	.40		0	7	F246	ML127s
13	9LS195DM	4	1	PPS	40MtØ	BTD	115m♦	0.0	5.0	.70	2.0	21n	4.0m	.40		5	C	F246	ML127s
14	9LS195FC	4	1	PPS	40MtØ	BTD	110m♦	0.0	5.0	.80	2.0	21n	4.0m	.40		0	7	F246	FL14g
15	9LS195FM	4	1	PPS	40MtØ	BTD	115m♦	0.0	5.0	.70	2.0	21n	4.0m	.40		5	C	F246	FL14g
16	9LS195PC	4	1	PPS	40MtØ	BTD	110m♦	0.0	5.0	.80	2.0	21n	4.0m	.40		0	7	F246	ML170
17	AM25LS08DC	4	1	PPS	40M	BTD	90m	0.0	5.0	.80	2.0	20n	8.0m	.45		0	7	F285	ML127k
18	AM25LS08DM	4	1	PPS	40M	BTD	90m	0.0	5.0	.70	2.0	20n	8.0m	.45		5	C	F285	ML62c
19	AM25LS08FM	4	1	PPS	40M	BTD	90m	0.0	5.0	.70	2.0	20n	8.0m	.45		5	C	F285	FL33b
20	AM25LS08PC	4	1	PPS	40M	BTD	90m	0.0	5.0	.80	2.0	20n	8.0m	.45		0	7	F285	ML89a
21	AM25LS09DC	4	1	PPS	40M	BTD	90m	0.0	5.0	.80	2.0	20n	8.0m	.45		0	7	F295	ML127k
22	AM25LS09DM	4	1	PPS	40M	BTD	90m	0.0	5.0	.80	2.0	20n	8.0m	.45		5	C	F295	ML62c
23	AM25LS09FM	4	1	PPS	40M	BTD	90m	0.0	5.0	.80	2.0	20n	8.0m	.45		5	C	F295	FL33b
24	AM25LS09PC	4	1	PPS	40M	BTD	90m	0.0	5.0	.80	2.0	20n	8.0m	.45		0	7	F295	ML89a
25	AM25LS175DC	4	1	PPS	40M	BTD	90m	0.0	5.0	.80	2.0	20n	8.0m	.45		0	7		
26	AM25LS175DM	4	1	PPS	40M	BTD	90m	0.0	5.0	.70	2.0	20n	8.0m	.45		5	C		
27	AM25LS175FM	4	1	PPS	40M	BTD	90m	0.0	5.0	.70	2.0	20n	8.0m	.45		5	C		
28	AM25LS175PC	4	1	PPS	40M	BTD	90m	0.0	5.0	.80	2.0	20n	8.0m	.45		0	7		
29#	M74LS95BP	4	1	PPS	40MtØ	BTD	110m♦	0.0	5.0	0.8	2.0	27n	4.0m	0.4		0	7	F402	ML408
30#	M74LS194AP	4	1	PPS	40MtØ	BTD	120m♦	0.0	5.0	0.8	2.0	22n	4.0m	0.4		0	7	F245	ML409
31#	M74LS195AP	4	1	PPS	40MtØ	BTD	110m♦	0.0	5.0	0.8	2.0	21n	4.0m	0.4		0	7	F246	ML409
32	N82S70N	4	1	PPS	40MØ	BTD	246m	0.0	5.0	.80	2.0	20n	11m	.40		0	7	F124b	ML86
33	N82S71N	4	1	PPS	40MØ	BTD	341m	0.0	5.0	.80	2.0	20n	11m	.40		0	7	F124a	MO001AE
34#	uPB2195D	4	1	PPS	40M	BTX	400m	0.0	5.0	.80	2.0					2	7	PN16cz	ML127s
35	9LS295DC	4	1	PPS	45MtØ	BTD	131m♦	0.0	5.0	.80	2.0§	26n	4.0m	.40		0	7	F282	TO116
36	9LS295DM	4	1	PPS	45MtØ	BTD	137m♦	0.0	5.0	.70	2.0§	26n	4.0m	.40		5	C	F282	TO116
37	9LS295FC	4	1	PPS	45MtØ	BTD	131m♦	0.0	5.0	.80	2.0§	26n	4.0m	.40		0	7	F282	TO86
38	9LS295FM	4	1	PPS	45MtØ	BTD	137m♦	0.0	5.0	.70	2.0§	26n	4.0m	.40		5	C	F282	TO86
39	9LS295PC	4	1	PPS	45MtØ	BTD	131m♦	0.0	5.0	.80	2.0§	26n	4.0m	.40		0	7	F282	ML233
40#	M74LS295AP	4	1	PPS	45MtØ	BTD	131m♦	0.0	5.0	0.8	2.0	26n	4.0m	0.4		0	7	F282	MLØ
41	93H00DC	4	1	PPS§	45M*Ø	BTX	588m	0.0	5.0	.80	2.0	28n	12m	.40		0	7	F2	ML127k
42	93H00DM	4	1	PPS§	45M*Ø	BTX	510m	0.0	5.0	.80	2.0	28n	12m	.40		5	C	F2	ML127k
43	93H00FC	4	1	PPS§	45M*Ø	BTX	588m	0.0	5.0	.80	2.0	28n	12m	.40		0	7	F2	FL14g
44	93H00FM	4	1	PPS§	45M*Ø	BTX	510m	0.0	5.0	.80	2.0	28n	12m	.40		5	C	F2	FL14g
45	93H00PC	4	1	PPS§	45M*Ø	BTX	560m	0.0	5.0	.80	2.0	28n	16m	.40		0	7	F2	ML170
46	93H72DC	4	1	PPS§	45M*Ø	BTX	650m	0.0	5.0	.80	2.0	21nØ	16m	.40		0	7	F141	ML15a
47	93H72DM	4	1	PPS§	45M*Ø	BTX	600m	0.0	5.0	.80	2.0	21nØ	16m	.40		5	C	F141	ML15a
48	93H72FC	4	1	PPS§	45M*Ø	BTX	650m	0.0	5.0	.80	2.0	21nØ	16m	.40		0	7	F141	FL14
49	93H72FM	4	1	PPS§	45M*Ø	BTX	600m	0.0	5.0	.80	2.0	21nØ	16m	.40		5	C	F141	FL14
50	93H72PC	4	1	PPS§	45M*Ø	BTX	650m	0.0	5.0	.80	2.0	21nØ	16m	.40		0	7	F141	ML170
51▼	N74S175F	4	1	PPS	50MØ	BTD	480m	0.0	5.0	.80	2.0	12n	16m	.40		0	7	F351	ML127r
52▼	N74S175N	4	1	PPS	50MØ	BTD	480m	0.0	5.0	.80	2.0	12n	16m	.40		0	7	F351	MO001AE
53	SN54S281J	4Δ	1	PPS	50MΔ	BTD	1.1	0.0	5.0	.80	2.0	55n	20m	.50		5	C	F272	MO015AA
54	SN54S281W	4Δ	1	PPS	50MΔ	BTD	950m	0.0	5.0	.80	2.0	55n	20m	.50		5	C	F272	MO019AA
55	SN74S281J	4Δ	1	PPS	50MΔ	BTX	1.1	0.0	5.0	.80	2.0	55n	20m	.50		0	7	F272	MO015AA
56	SN74S281N	4Δ	1	PPS	50MΔ	BTX	1.1	0.0	5.0	.80	2.0	55n	20m	.50		0	7	F272	ML72c
57	9LS175DC	4	1	PPS	55MΔ†	BTD	94m♦	0.0	5.0	.80	2.0	20n	4.0m	.40		0	7	F406	ML127s
58	9LS175DM	4	1	PPS	55MΔ†	BTD	99m♦	0.0	5.0	.70	2.0	20n	4.0m	.40		5	C	F406	ML127s
59	9LS175FC	4	1	PPS	55MΔ†	BTD	94m♦	0.0	5.0	.80	2.0	20n	4.0m	.40		0	7	F406	FL14g
60	9LS175FM	4	1	PPS	55MΔ†	BTD	99m♦	0.0	5.0	.70	2.0	20n	4.0m	.40		5	C	F406	FL14g
61	9LS175PC	4	1	PPS	55MΔ†	BTD	94m♦	0.0	5.0	.80	2.0	20n	4.0m	.40		0	7	F406	ML170
62	N74S178A	4	1	PPS	60M†	BTX	473m	0.0	5.0	.50%	2.7	20nØ	20m	.50		0	7	F124b	ML86
63	N74S178F	4	1	PPS	60M†	BTX	473m	0.0	5.0	.50%	2.7	20nØ	20m	.50		0	7	F124b	ML93b
64	N74S179B	4	1	PPS	60M†	BTX	473m	0.0	5.0	.50%	2.7	20nØ	20m	.50		5	C	F124a	ML132
65	N74S179F	4	1	PPS	60M†	BTX	473m	0.0	5.0	.50%	2.7	20nØ	20m	.50		5	C	F124a	ML127m
66	N82S70A	4	1	PPS	60M†	BTX	473m	0.0	5.0	.50%	2.7	20nØ	20m	.50		0	7	F124b	ML86
67	N82S70F	4	1	PPS	60M†	BTX	473m	0.0	5.0	.50%	2.7	20nØ	20m	.50		0	7	F124b	ML93b
68	N82S71B	4	1	PPS	60M†	BTX	473m	0.0	5.0	.50%	2.7	20nØ	20m	.50		5	C	F124a	ML132
69	N82S71F	4	1	PPS	60M†	BTX	473m	0.0	5.0	.50%	2.7	20nØ	20m	.50		5	C	F124a	ML127m
70	54S194DM	4	1	PPS	70MØ	BTD	675m	0.0	5.0	.80	2.0	23n	20m	.50		5	C	F245	ML127k
71	54S194FM	4	1	PPS	70MØ	BTD	675m	0.0	5.0	.80	2.0	23n	20m	.50		5	C	F245	FL14g
72	74S194DC	4	1	PPS	70MØ	BTD	675m	0.0	5.0	.80	2.0	23n	20m	.50		0	7	F245	ML127k
73	74S194FC	4	1	PPS	70MØ	BTD	675m	0.0	5.0	.80	2.0	23n	20m	.50		0	7	F245	FL14g
74	74S194PC	4	1	PPS	70MØ	BTD	675m	0.0	5.0	.80	2.0	23n	20m	.50		0	7	F245	ML170
75	93S00DC	4	1	PPS§	70MØ	BTD	600m	0.0	5.0	.80	2.0	23n	20m	.50		0	7	F2	ML127k
76	93S00DM	4	1	PPS§	70MØ	BTD	600m	0.0	5.0	.80	2.0	23n	20m	.50		5	C	F2	ML127k
77	93S00FC	4	1	PPS§	70MØ	BTD	600m	0.0	5.0	.80	2.0	23n	20m	.50		0	7	F2	FL14g
78	93S00FM	4	1	PPS§	70MØ	BTD	600m	0.0	5.0	.80	2.0	23n	20m	.50		5	C	F2	FL14g
79	93S00PC	4	1	PPS§	70MØ	BTD	600m	0.0	5.0	.80	2.0	23n	20m	.50		0	7	F2	ML170
80	JANM38510/07601BEB	4	1	PPS	70M	BTD	700m	0.0	5.0	.80	2.0	28n	20m	.50		5	C	F245	ML143
81	JANM38510/07601BFB	4	1	PPS	70M	BTD	700m	0.0	5.0	.80	2.0	28n	20m	.50		5	C	F245	FL31
82	JANM38510/07601CEB	4	1	PPS	70M	BTD	700m	0.0	5.0	.80	2.0	28n	20m	.50		5	C	F245	ML143
83	JANM38510/07601CFB	4	1	PPS	70M	BTD	700m	0.0	5.0	.80	2.0	28n	20m	.50		5	C	F245	FL31
84	N74S194F	4	1	PPS	70MØ	BTD	675m	0.0	5.0	.80	2.0	12n	16m	.40		0	7	F245	ML127r
85	N74S194N	4	1	PPS	70MØ	BTD	675m	0.0	5.0	.80	2.0	12n	16m	.40		0	7	F245	MO001AE
86	N74S195F	4	1	PPS	70MØ	BTD	545m	0.0	5.0	.80	2.0	12n	16m	.40		0	7	F108	ML127r
87	N74S195N	4	1	PPS	70MØ	BTD	545m	0.0	5.0	.80	2.0	12n	16m	.40		0	7	F108	MO001AE
88	SN54S195J	4	1	PPS	70MØ	BTD	350m†	0.0	5.0	.80	2.0	18nØ	20m	.50		5	C	F108	ML61a
89	SN54S195W	4	1	PPS	70MØ	BTD	350m†	0.0	5.0	.80	2.0	18nØ	20m	.50		5	C	F108	MO004AC
90	SN74S195J	4	1	PPS	70MØ	BTD	350m†	0.0	5.0	.80	2.0	18nØ	20m	.50		0	7	F108	ML61a
91	SN74S195N	4	1	PPS	70MØ	BTD	350m†	0.0	5.0	.80	2.0	18nØ	20m	.50		0	7	F108	ML48
92	N74S194B	4	1	PPS	70MØ	BTX	675m♦	0.0	5.0	.80	2.0	18n	20m	.50		0	7	F245	ML132
93	N74S194J	4	1	PPS	70MØ	BTX	675m♦	0.0	5.0	.80	2.0	18n	20m	.50		0	7	F245	ML107
94	N74S194W	4	1	PPS	70MØ	BTX	675m♦	0.0	5.0	.80	2.0	18n	20m	.50		0	7	F245	FL25
95▼#	RC54S194J	4	1	PPS	70MØ	BTX	572m	0.0	5.0	.80	2.6	18nØ	20m	.50		5	C	F245	ML132
96▼#	RC54S194W	4	1	PPS	70MØ	BTX	572m	0.0	5.0	.80	2.6	18nØ	20m	.50		5	C	F245	FL25
97	S54S194J	4	1	PPS	70MØ	BTX	572m	0.0	5.0	.80	2.0	18nØ	20m	.50		5	C	F245	ML132
98	S54S194W	4	1	PPS	70MØ	BTX	572m	0.0	5.0	.80	2.0	18nØ	20m	.50		5	C	F245	FL25
99	SN54S194J	4	1	PPS	70MØ	BTX	425m†	0.0	5.0	.80	2.0	18nØ	20m	.50		5	C	F245	ML61a
100	SN54S194W	4	1	PPS	70MØ	BTX	425m†	0.0	5.0	.80	2.0	18nØ	20m	.50		5	C	F245	MO004AC
101	SN74S194J	4	1	PPS	70MØ	BTX	425m†	0.0	5.0	.80	2.0	18nØ	20m	.50		0	7	F245	ML61a
102	SN74S194N	4	1	PPS	70MØ	BTX	425m†	0.0	5.0	.80	2.0	18nØ	20m	.50		0	7	F245	ML48
103	AM25S18DC	4	1	PPS	75M	BTD	720m	0.0	5.0	.80	2.0§	13n	20m	.50		0	7	F331	ML127k
104	AM25S18DM	4	1	PPS	75M	BTD	720m	0.0	5.0	.80	2.0§	13n	20m	.50		5	C	F331	ML62c
105	AM25S18FM	4	1	PPS	75M	BTD	720m	0.0	5.0	.80	2.0§	13n	20m	.50		5	C	F331	FL33b
106	AM25S18PC	4	1	PPS	75M	BTD	720m	0.0	5.0	.80	2.0§	13n	20m	.50		0	7	F331	ML89a

SYMBOLS AND CODES EXPLAINED IN INTERPRETER

7. SHIFT REGISTERS

IN ORDER OF(1)No.BITS/REG(2)No.REGISTERS (3)OP.CODE(4)MAX W/C FREQ(5)STRUCT(6)TYPE No

LINE No.	[6] TYPE No.	ORGANIZATION [1] BITS PER REGISTER	ORGANIZATION [2] No. REGS	[3] OPER. CODE	[4] MAX WORST CASE FREQ. (Hz)	[5] STRUCTURE CODE	MAX OPER. POWER DISS. (W)	RATED POWER SUP. SPAN NEG. (V)	RATED POWER SUP. SPAN POS. (V)	INPUT LOGIC LEVELS MAX '0' (V)	INPUT LOGIC LEVELS MIN '1' (V)	MAX PROP. DELAY (s)	MIN OUTPUT SINK CURRENT (A)	MIN OUTPUT SINK CURRENT @ OUT (V)	MIN CLOCK FREQ. (Hz)	OPER. TEMP. RANGE CODE -	OPER. TEMP. RANGE CODE +	DRAWINGS LOGIC/BLOCK	DRAWINGS OUTLINE
1	SN54S175J	4	1	PPS	75MΔ	BTX	480m	0.0	5.0	.80	2.0	22n	20m	.50		5	C	F351	ML61a
2	SN54S175W	4	1	PPS	75MΔ	BTX	480m	0.0	5.0	.80	2.0	22n	20m	.50		5	C	F351	MO004AC
3	SN74S175J	4	1	PPS	75MΔ	BTX	480m	0.0	5.0	.80	2.0	22n	20m	.50		0	7	F351	ML61a
4	SN74S175N	4	1	PPS	75MΔ	BTX	480m	0.0	5.0	.80	2.0	22n	20m	.50		0	7	F351	ML48
5	AM54S194J	4	1	PPS	110M†	BTD	450m	0.0	5.0	.80	2.0	10n	20m	.50		5	C	F89a	ML62
6	AM54S194W	4	1	PPS	110M†	BTD	450m	0.0	5.0	.80	2.0	10n	20m	.50		5	C	F89a	FL14
7	AM54S195J	4	1	PPS	110M†	BTD	375m	0.0	5.0	.80	2.0	10n	20m	.50		5	C	F192	ML62
8	AM54S195W	4	1	PPS	110M†	BTD	375m	0.0	5.0	.80	2.0	10n	20m	.50		5	C	F192	FL14
9	AM74S194J	4	1	PPS	110M†	BTD	450m	0.0	5.0	.80	2.0	10n	20m	.50		0	7	F89a	ML15a
10	AM74S194N	4	1	PPS	110M†	BTD	450m	0.0	5.0	.80	2.0	10n	20m	.50		0	7	F89a	ML89a
11	AM74S195J	4	1	PPS	110M†	BTD	375m	0.0	5.0	.80	2.0	10n	20m	.50		0	7	F192	ML15a
12	AM74S195N	4	1	PPS	110M†	BTD	375m	0.0	5.0	.80	2.0	10n	20m	.50		0	7	F192	ML89a
13	95000DC	4	1	PPS	150MØ	BEX	442m	5.2	0.0	-1.4	-1.1	5.0n				0	7	F488	ML157e
14	MC10141L	4	1	PPS	150M	BEX	425m†	5.2	0.0	-1.4	-1.1	3.8nØ	50m⍁			3	8	F174	ML127b
15	MC10141P	4	1	PPS	150MØ	BEX	425m†	5.2	0.0	-1.4	-1.1	3.8nØ	50m⍁			3	8	F174	ML145
16	MC10541F	4	1	PPS	150MØ	BEX	425m†	5.2	0.0	-1.4	-1.1	3.8nØ	50m⍁			5	C	F174	FL34
17	MC10541L	4	1	PPS	150MØ	BEX	425m†	5.2	0.0	-1.4	-1.1	3.8nØ	50m⍁			5	C	F174	ML127b
18	95H00DC	4	1	PPS	190M†Ø	BEX	551m	5.2	0.0	-1.4	1.1	7.5nØ	50m⍁			0	7	F142	ML15a
19	F10000DC	4	1	PPS	200M†Ø	BEX	343m♦†	5.2	0.0	-1.4	-1.1	5.0n	50m⍁			0	7	F488	ML127s
20	F10000DM	4	1	PPS	200M†Ø	BEX	343m♦†	5.2	0.0	-1.4	-1.1	5.0n	50m⍁			5	C	F488	ML127s
21	F10000FC	4	1	PPS	200M†Ø	BEX	343m♦†	5.2	0.0	-1.4	-1.1	5.0n	50m⍁			0	7	F488a	FL14j
22	F10000FM	4	1	PPS	200M†Ø	BEX	343m♦†	5.2	0.0	-1.4	-1.1	5.0n	50m⍁			5	C	F488a	FL14j
23	F10000PC	4	1	PPS	200M†Ø	BEX	343m♦†	5.2	0.0	-1.4	-1.1	5.0n	50m⍁			0	7	F488	ML2b
24	F95000DC	4	1	PPS	200M†Ø	BEX	442m♦	5.2	0.0	-1.4	-1.1	5.0n	50m⍁			0	7	F488	ML127s
25#	GXB10141	4	1	PPS	200M†	BEX	530m	5.2	0.0	-1.4	-1.1	3.8n	50m⍁			0	7	F258	ML127x
26	10541DM	4	1	PPS§	250MØ†	BEX	530m	5.2	0.0	-1.4	-1.1	3.8n	30m⍁			5	C	F487	ML157e
27	F10141DC	4	1	PPS	250M†Ø	BEX	234m♦†	5.2	0.0	-1.4	-1.1	3.8n	50m⍁			0	7	F487	ML127s
28	F10141FC	4	1	PPS	250M†Ø	BEX	234m♦†	5.2	0.0	-1.4	-1.1	3.8n	50m⍁			0	7	F487	FL14j
29	F10541DM	4	1	PPS	250M†Ø	BEX	234m♦†	5.2	0.0	-1.4	-1.1	3.8n	50m⍁			5	C	F487	ML127s
30	F10541FM	4	1	PPS	250M†Ø	BEX	234m♦†	5.2	0.0	-1.4	-1.1	3.8n	50m⍁			5	C	F487	FL14j
31#	uPB2175D	4	1	PSS		BTX	150m⍁	0.0	5.0	.80	2.0	10n§				2	7	PN16df	ML127s
32	MC5494L	4	1	PSS	10M	BTX	175m†	0.0	5.0	.04%	2.4	40n	16m	.40		5	C	F110	ML127b
33	MC7494L	4	1	PSS	10M	BTX	175m†	0.0	5.0	.04%	2.4	40n	16m	.40		0	7	F110	ML127b
34	N7494B	4	1	PSS	10MØ	BTX	290m♦	0.0	5.0	.80	2.0	40nØ	16m	.40		0	7	F92	ML85
35	N7494F	4	1	PSS	10MØ	BTX	290m♦	0.0	5.0	.80	2.0	40n	16m	.40		0	7	F92	ML61d
36	S5494B	4	1	PSS	10MØ	BTX	250m♦	0.0	5.0	.80	2.0	40nØ	16m	.40		5	C	F92	ML132
37	S5494F	4	1	PSS	10MØ	BTX	250m♦	0.0	5.0	.80	2.0	40nØ	16m	.40		5	C	F92	ML61d
38	S5494W	4	1	PSS	10MØ	BTX	250m♦	0.0	5.0	.80	2.0	40nØ	16m	.40		5	C	F92	FL25
39	SN5494J	4	1	PSS	10MØ	BTX	175m†	0.0	5.0	.80	2.0	40nØ	16m	.40		5	C	F92	ML61
40	SN5494W	4	1	PSS	10MØ	BTX	175m†	0.0	5.0	.80	2.0	40n	16m	.40		5	C	F92	MO004AC
41	SN7494J	4	1	PSS	10MØ	BTX	175m†	0.0	5.0	.80	2.0	40nØ	16m	.40		0	7	F92	ML61
42	SN7494N	4	1	PSS	10MØ	BTX	175m†	0.0	5.0	.80	2.0	40nØ	16m	.40		0	7	F92	ML48
43#	ZN5494E	4	1	PSS	10MØ	BTX	175m†	0.0	5.0	.80	2.0	40nØ	16m	.40		5	C	PN16fg	ML5f
44#	ZN5494J	4	1	PSS	10MØ	BTX	175m†	0.0	5.0	.80	2.0	40nØ	16m	.40		5	C	PN16fg	ML85b
45#	ZN7494E	4	1	PSS	10MØ	BTX	175m†	0.0	5.0	.80	2.0	40nØ	16m	.40		0	7	PN16fg	ML5f
46#	ZN7494J	4	1	PSS	10MØ	BTX	175m†	0.0	5.0	.80	2.0	40nØ	16m	.40		0	7	PN16fg	ML85b
47	340175DC	4	1	PSS	16MΔ†	MCX		0.0	10	3.0	7.0	25n†	1.2m	.50		4	8	F411	ML127s
48	340175DM	4	1	PSS	16MΔ†	MCX		0.0	10	3.0	7.0	25n†	1.2m	.50		5	C	F411	ML127s
49	340175FC	4	1	PSS	16MΔ†	MCX		0.0	10	3.0	7.0	25n†	1.2m	.50		4	8	F411	FL14g
50	340175FM	4	1	PSS	16MΔ†	MCX		0.0	10	3.0	7.0	25n†	1.2m	.50		5	C	F411	FL14g
51	340175PC	4	1	PSS	16MΔ†	MCX		0.0	10	3.0	7.0	25n†	1.2m	.50		4	8	F411	ML170
52#	ZN5495AE	4	1	PSS	25MØ	BTX	195m†	0.0	5.0	.80	2.0	32nØ	16m	.40		5	C	PN14x	ML71e
53#	RC5494B	4	1	PSS	100MØ	BTX	250m♦	0.0	5.0	.80	2.0	40nØ	16m	.40		5	C	F92	CL132
54#	RC5494F	4	1	PSS	100MØ	BTX	250m♦	0.0	5.0	.80	2.0	40nØ	16m	.40		5	C	F92	ML61b
55#	RC5494W	4	1	PSS	100MØ	BTX	250m♦	0.0	5.0	.80	2.0	40nØ	16m	.40		5	C	F92	FL25
56	MC1694L	4	1	SPS	325M†	BEX	750m†	5.2	0.0	-1.6%	-.96	3.7nØ	40m⍁			0	7	F173	ML60b
57	MC686L	4	1	SSS	500k%*	BTX	480m†	0.0	15	1.5%	12.5	300n†	12m	1.5		3	7	F234	ML60b
58	MC686P	4	1	SSS	500k%*	BTX	480m†	0.0	15	1.5%	12.5	300n†	12m	1.5		3	7	F234	ML5b
59#	H160D1	4	1	SSS	1.5MØ	BXX	500m⍁	0.0	20	6.0	8.0	350n†				0	7		
60	5494DM	4	1	SSS	10MØ	BTX	250m	0.0	5.0	.80	2.0	40n	16m	.40		5	C	PN16fg	ML127e
61	5494FM	4	1	SSS	10MØ	BTX	250m	0.0	5.0	.80	2.0	40n	16m	.40		5	C	PN16fg	FL14g
62	7494DC	4	1	SSS	10MØ	BTX	290m	0.0	5.0	.80	2.0	40n	16m	.40		0	7	PN16fg	ML127e
63	7494FC	4	1	SSS	10MØ	BTX	290m	0.0	5.0	.80	2.0	40n	16m	.40		0	7	PN16fg	FL14g
64	7494PC	4	1	SSS	10MØ	BTX	290m	0.0	5.0	.80	2.0	40n	16m	.40		0	7	PN16fg	ML170
65	RH803	4	2	PPS	500k	BDXØ	2.2	0.0	15	1.0†	15†					0	7	F263	
66	MSR8	4	2	PPS$	5.0M	Ø	360m	0.0	5.0	.40	3.0					0	7	F341	
67	RD803	4	2	PPS	5.0M	BDXØ	500m	0.0	5.0	.30†	5.0†					0	7	F263	
68	RT801	4	2	PPS	10M	BTXØ	540m	0.0	5.0	.30	3.3†					0	7	F266	
69	TMSR8A	4	2	PPS§	25MΔ	BTXØ	500m	0.0	5.0	.22†	3.3†	35n				0	7	F342a	
70	SN54LS396J	4	2$	PPS	30MΔ	BTD	200m	0.0	5.0	.70	2.0	30n	4.0m	.40		5	C	F532	ML61a
71	SN54LS396W	4	2$	PPS	30MΔ	BTD	200m	0.0	5.0	.70	2.0	30n	4.0m	.40		5	C	F532	MO004AC
72	SN74LS396J	4	2$	PPS	30MΔ	BTD	200m	0.0	5.0	.80	2.0	30n	8.0m	.50		0	7	F532	ML61a
73	SN74LS396N	4	2$	PPS	30MΔ	BTD	200m	0.0	5.0	.80	2.0	30n	8.0m	.50		0	7	F532	ML48
74	34015DC	4	2	SPS		MCX	2.0m♦	0.0	10	3.0	7.0	135n†	1.2m	.50		4	8	F80	ML127s
75	34015DM	4	2	SPS		MCX	2.0m♦	0.0	10	3.0	7.0	135n†	1.2m	.50		5	C	F80	ML127s
76	34015FC	4	2	SPS		MCX	2.0m♦	0.0	10	3.0	7.0	135n†	1.2m	.50		4	8	F80	FL14g
77	34015FM	4	2	SPS		MCX	2.0m♦	0.0	10	3.0	7.0	135n†	1.2m	.50		5	C	F80	FL14g
78	34015PC	4	2	SPS		MCX	2.0m♦	0.0	10	3.0	7.0	135n†	1.2m	.50		4	8	F80	ML170
79#	HEF4015B	4	2	SPS		MCX	400m⍁	0.0	10	3.0	7.0		2.0m	.50		4	8	F434	ML⍁
80	RH804	4	2	SPS	500k	BDXØ	2.1	0.0	15	1.0†	15†					0	7	F264	
81	JANM38510/05703BEA	4	2	SPS	700k	MCX	200m⍁	0.0	5.0	.85	3.95	1.4u	85u%	.50		5	C	F462	ML220
82	JANM38510/05703BEB	4	2	SPS	700k	MCX	200m⍁	0.0	5.0	.85	3.95	1.4u	85u%	.50		5	C	F462	ML220
83	JANM38510/05703BEC	4	2	SPS	700k	MCX	200m⍁	0.0	5.0	.85	3.95	1.4u	85u%	.50		5	C	F462	ML220
84	JANM38510/05703BFA	4	2	SPS	700k	MCX	200m⍁	0.0	5.0	.85	3.95	1.4u	85u%	.50		5	C	F462	FL31
85	JANM38510/05703CEA	4	2	SPS	700k	MCX	200m⍁	0.0	5.0	.85	3.95	1.4u	85u%	.50		5	C	F462	ML220
86	JANM38510/05703CEB	4	2	SPS	700k	MCX	200m⍁	0.0	5.0	.85	3.95	1.4u	85u%	.50		5	C	F462	ML220
87	JANM38510/05703CEC	4	2	SPS	700k	MCX	200m⍁	0.0	5.0	.85	3.95	1.4u	85u%	.50		5	C	F462	ML220
88	JANM38510/05703CFA	4	2	SPS	700k	MCX	200m⍁	0.0	5.0	.85	3.95	1.4u	85u%	.50		5	C	F462	FL31
89	CM4015AE	4	2	SPS	1.0M	MCX	200m⍁	0.0	5.0	.01%Ø	4.99	1.0uØ				4	8	F80	ML4g
90	TP4015AJ	4	2	SPS	1.3MΔ	MCX	14m♦	0.0	10	.05%	9.95	500n	350u	9.5		4	8	F355	ML61a
91	TP4015AN	4	2	SPS	1.3MΔ	MCX	14m♦	0.0	10	.05%	9.95	500n	350u	9.5		4	8	F355	ML48
92	CM4015AD	4	2	SPS	1.5M	MCX	200m⍁	0.0	5.0	.01%Ø	4.99	750nØ				5	C	F80	ML4g
93	TF4015AJ	4	2	SPS	1.8MΔ	MCX	6.0m♦	0.0	10	.05%	9.95	400n	350u	9.5		5	C	F355	ML61a
94	TF4015AN	4	2	SPS	1.8MΔ	MCX	6.0m♦	0.0	10	.05%	9.95	400n	350u	9.5		5	C	F355	ML48
95	SS4015AE	4	2	SPS	2.5M*			0.0	10	.20%	9.8	300n	2.8m	1.5		2	8	F298	
96	CD4015AE	4	2	SPS	2.5MØ	MCX	14m♦	0.0	10	.05%	9.95	300nØ	80u%	9.5		4	8	F80	MO001AC
97	CD4015AY	4	2	SPS	2.5MØ	MCX	14m♦	0.0	10	.05%	9.95	300nØ	80u	9.5		4	8	F80	MO001AC
98#	HBF4015AE	4	2	SPS	2.5MØ	MCX	14m♦	0.0	10	.05%	9.9	300nØ	80u%	9.5		4	8	F80	MO001AC
99#	HBF4015AF	4	2	SPS	2.5MØ	MCX	14m♦	0.0	10	.05%	9.9	300nØ	80u%	9.5		4	8	F80	ML127c
100	SCL4015BC	4	2	SPS	3.0MØ	MCA	300u♦	0.0	15	4.0	11	200nØ	3.4mØ	1.5		5	C	F424	ML127t
101	SCL4015BD	4	2	SPS	3.0MØ	MCA	300u♦	0.0	15	4.0	11	200nØ	3.4mØ	1.5		5	C	F424	MO001AB
102	SCL4015BE	4	2	SPS	3.0MØ	MCA	300u♦	0.0	15	4.0	11	200nØ	3.0mØ	1.5		4	8	F424	ML127u

SYMBOLS AND CODES EXPLAINED IN INTERPRETER

7. SHIFT REGISTERS

IN ORDER OF(1)No.BITS/REG(2)No.REGISTERS (3)OP.CODE(4)MAX W/C FREQ(5)STRUCT(6)TYPE No

LINE No.	6 TYPE No.	ORGANIZATION 1 BITS PER REGISTER	ORGANIZATION 2 No. REGS	3 OPER. CODE	4 MAX WORST CASE FREQ. (Hz)	5 STRUCTURE CODE	MAX OPER. POWER DISS. (W)	RATED POWER SUP. SPAN NEG. (V)	RATED POWER SUP. SPAN POS. (V)	INPUT LOGIC LEVELS MAX '0' (V)	INPUT LOGIC LEVELS MIN '1' (V)	MAX PROP. DELAY (s)	MIN OUTPUT SINK CURRENT (A)	MIN OUTPUT SINK CURRENT @ OUT (V)	MIN CLOCK FREQ. (Hz)	OPER. TEMP. RANGE CODE -	OPER. TEMP. RANGE CODE +	DRAWINGS LOGIC/ BLOCK	DRAWINGS OUTLINE
1	SCL4015BF	4	2	SPS	3.0MØ	MCA	300u♦	0.0	15	4.0	11	200nØ	3.4mØ	1.5		5	C	F424	MO004AH
2▼	SCL4015BHN	4	2	SPS	3.0MØ	MCA	300u♦	0.0	15	4.0	11	200nØ	3.4mØ	1.5		5	C	F424	CHØ
3	CD4015AD	4	2	SPS	3.0MØ	MCX	6.0m♦	0.0	10	.05%	9.95	225nØ	140u%	9.5		5	C	F80	MO0001AE
4	CD4015AF	4	2	SPS	3.0MØ	MCX	6.0m♦	0.0	10	.05%	9.95	225nØ	140u%	9.5		5	C	F80	MO0001AC
5	CD4015AH	4	2	SPS	3.0MØ	MCX	6.0m♦	0.0	10	.05%	9.95	225nØ	140u	9.5		5	C	F80	CH6
6	CD4015AK	4	2	SPS	3.0MØ	MCX	6.0m♦	0.0	10	.05%	9.95	225nØ	140u%	9.5		5	C	F80	MO0001AC
7	CM4015AF	4	2	SPS	3.0MØ	MCX	6.0m♦	0.0	10	.05%	9.95	225nØ	140u%	9.5		5	C	F80	ML19a
8#	HBC4015AD	4	2	SPS	3.0MØ	MCX	6.0m♦	0.0	10	.05%	9.9	225nØ	140u%	9.5		5	C	F80	ML127c
9#	HBC4015AF	4	2	SPS	3.0MØ	MCX	6.0m♦	0.0	10	.05%	9.9	225nØ	140u%	9.5		5	C	F80	ML127c
10#	HBC4015AK	4	2	SPS	3.0MØ	MCX	6.0m♦	0.0	10	.05%	9.9	225nØ	140u%	9.5		5	C	F80	MO004AC
11▼#	HD14015B	4	2	SPS	3.0MØ	MCX		0.0	15	4.0	11	265n				4	8	F424	
12	MC14015BAL	4	2	SPS	3.8MØ	MCX	300u♦Ø	0.0	15	4.0	11	170nØ	3.4m	1.5		5	C	F397	ML157a
13	MC14015BCL	4	2	SPS	3.8MØ	MCX	1.2m♦Ø	0.0	15	4.0	11	170nØ	3.0m	1.5		4	8	F397	ML157a
14	MC14015BCP	4	2	SPS	3.8MØ	MCX	1.2m♦Ø	0.0	15	4.0	11	170nØ	3.0m	1.5		4	8	F397	ML145
15	RD804	4	2	SPS	5.0M	BDXØ	575m	0.0	5.0	.30†	5.0†					0	7	F264	
16#	uPD4015C	4	2	SPS	5.0M†Ø	MCX	200mØØ	0.0	10	.30	.70	300n	80u	.50		4	8	F80	MO0001AC
17	4015BDC	4	2	SPS	8.0MØ	MCX	9.0m♦	0.0	15	4.0	11	128n	4.5m	1.5		4	8	F424	ML157e
18	4015BDM	4	2	SPS	8.0MØ	MCX	9.0m♦	0.0	15	4.0	11	128n	4.5m	1.5		5	C	F424	ML157e
19	4015BFC	4	2	SPS	8.0MØ	MCX	9.0m♦	0.0	15	4.0	11	128n	4.5m	1.5		4	8	F424	FL14j
20	4015BFM	4	2	SPS	8.0MØ	MCX	9.0m♦	0.0	15	4.0	11	128n	4.5m	1.5		5	C	F424	FL14j
21	4015BPC	4	2	SPS	8.0MØ	MCX	9.0m♦	0.0	15	4.0	11	128n	4.5m	1.5		4	8	F424	ML170
22	RT802	4	2	SPS	10M	BTXØ	600m	0.0	5.0	.30	3.3†					0	7	F267	
23#	HEF4015P	4	2	SPS	14M	MCX	400mØ	0.0	10	3.0	7.0	300n	1.2m	.50		4	8	F434	ML48e
24	CD4015BD	4	2	SPS	16M†	MCX	500mØ	0.0	15	4.0	11	80n†	6.8m†	1.5		5	C	F505	MO0001AE
25	CD4015BE	4	2	SPS	16M†	MCX	500mØ	0.0	15	4.0	11	80n†	6.8m†	1.5		4	8	F505	MO0001AC
26	CD4015BF	4	2	SPS	16M†	MCX	500mØ	0.0	15	4.0	11	80n†	6.8m†	1.5		5	C	F505	MO0001AC
27▼	CD4015BH	4	2	SPS	16M†	MCX	500mØ	0.0	15	4.0	11	80n†	6.8m†	1.5		5	C	F505	
28#	HCC4015BD	4	2	SPS	16M†	MCX	500mØ	0.0	15	4.0	11	80n†	6.8m†	1.5		5	C	F505	MO0001AE
29#	HCC4015BF	4	2	SPS	16M†	MCX	500mØ	0.0	15	4.0	11	80n†	6.8m†	1.5		5	C	F505	MO0001AC
30#	HCC4015BK	4	2	SPS	16M†	MCX	500mØ	0.0	15	4.0	11	80n†	6.8m†	1.5		5	C	F505	MO004AC
31#	HCF4015BE	4	2	SPS	16M†	MCX	500mØ	0.0	15	4.0	11	80n†	6.8m†	1.5		4	8	F505	MO0001AC
32#	HCF4015BF	4	2	SPS	16M†	MCX	500mØ	0.0	15	4.0	11	80n†	6.8m†	1.5		4	8	F505	MO0001AC
33#	HEF4015BD	4	2	SPS	17M*	MCX	400mØ	0.0	15	4.0	11	85n	3.0m	1.5		4	8	F492	ML127x
34#	HEF4015BP	4	2	SPS	17M*	MCX	400mØ	0.0	15	4.0	11	85n	3.0m	1.5		4	8	F492	ML89j
35▼#	HEF4015BT	4	2	SPS	17M*	MCX	400mØ	0.0	15	4.0	11	85n	3.0	1.5		4	8	F492	FL83
36	T102	4	3	PPS	20M	BTXØ	1.2	4.7	5.3	.80	1.8	25n†	9.6m	.45		0	7		PLØ
37	I102	4	3	SSS	5.0M	BDXØ	900m	4.7	5.3	1.1	1.9	55n†	14m	.50		0	7	F218	PLØ
38	I103	4	3	SSS	5.0M	BDXØ	900m	4.7	5.3	1.1	1.9	55n†	14m	.50		0	7	F219	PLØ
39▼	CD40108BD	4	4	PPD	4.5MΔ	MNG	500m	0.0	20	1.5	3.5§	720n	6.8m	1.5	1.5M#	5	C	F564	MO015ag
40▼	CD40108BE	4	4	PPD	4.5MΔ	MNG	500m	0.0	20	1.5	3.5§	720n	6.8m	1.5	1.5M#	4	8	F564	MO015aa
41▼	CD40108BF	4	4	PPD	4.5MΔ	MNG	500m	0.0	20	1.5	3.5§	720n	6.8m	1.5	1.5M#	5	C	F564	MO015aa
42▼	CD40108BH	4	4*	PPD	4.5MΔ	MNG	500m	0.0	20	1.5	3.5§	720n	6.8m	1.5	15M#	5	C	F564	CH13
43#	M74LS670P	4	4	PPS		BTD		0.0	5.0	.80	2.0§	45n	4.0m	.40		2	7	A156	ML409
44	9403DC	4	16	PPS▼	10M	BIX	560m	0.0	5.0	.80	2.0	600n	16m	.50		0	7	F551	ML133h
45	9403DM	4	16	PPS▼	10M	BIX	560m	0.0	5.0	.80	2.0	600n	8.0m	.40		5	C	F551	ML133h
46	3341-9-7K	4	64	PPS▼	1.0M†	MPG	400m	12	5.0	.80	4.0	25u	1.6m	.40		0	7	F209	ML57
47	9423DC	4	64	PPS▼	10M	BIX	750m	0.0	5.0	.80	2.0§	65n	8.0m	.50		0	7	F551a	ML133h
48	9423FC	4	64	PPS▼	10M	BIX	750m	0.0	5.0	.80	2.0§	65n	8.0m	.50		0	7	F551a	FL47
49	9423PC	4	64	PPS▼	10M	BIX	750m	0.0	5.0	.80	2.0§	65n	8.0m	.50		0	7	F551a	ML216c
50	N7496F	5	1	PPD	10MØ	BTX	395m♦	0.0	5.0	.80	2.0	40n	16m	.40				F40	ML61d
51	SN54L96J	5	1	PPS	5.0M	BTX	120m†	0.0	5.0	.80	2.0	110nØ	8.0m	.40		5	C	F40	ML61a
52	SN74L96J	5	1	PPS	5.0M	BTX	120m†	0.0	5.0	.80	2.0	110nØ	8.0m	.40		0	7	F40	ML61a
53	SN74L96N	5	1	PPS	5.0M	BTX	120m†	0.0	5.0	.80	2.0	110nØ	8.0m	.40		0	7	F40	ML61a
54#	ZN54L96E	5	1	PPS	5.0MØ	BTX	120m†	0.0	5.0	.80	2.0	110nØ	8.0m	.40		5	C	F457	ML5f
55#	ZN54L96J	5	1	PPS	5.0MØ	BTX	120m†	0.0	5.0	.80	2.0	110nØ	8.0m	.40		5	C	F457	ML85b
56#	ZN74L96E	5	1	PPS	5.0MØ	BTX	120m†	0.0	5.0	.80	2.0	110nØ	8.0m	.40		0	7	F457	ML5f
57#	ZN74L96J	5	1	PPS	5.0MØ	BTX	120m†	0.0	5.0	.80	2.0	110nØ	8.0m	.40		0	7	F457	ML85b
58	JANM38510/00902BEA	5	1	PPS	7.0M	BTX	400mØ	0.0	5.0	.80	2.0	77n	16m	.40		5	C	F40	ML142
59	JANM38510/00902BEB	5	1	PPS	7.0M	BTX	400mØ	0.0	5.0	.80	2.0	77n	16m	.40		5	C	F40	ML142
60	JANM38510/00902BFA	5	1	PPS	7.0M	BTX	400mØ	0.0	5.0	.80	2.0	77n	16m	.40		5	C	F40	FL31
61	JANM38510/00902BFB	5	1	PPS	7.0M	BTX	400mØ	0.0	5.0	.80	2.0	77n	16m	.40		5	C	F40	FL31
62	JANM38510/00902CEA	5	1	PPS	7.0M	BTX	400mØ	0.0	5.0	.80	2.0	77n	16m	.40		5	C	F40	ML142
63	JANM38510/00902CEB	5	1	PPS	7.0M	BTX	400mØ	0.0	5.0	.80	2.0	77n	16m	.40		5	C	F40	ML142
64	JANM38510/00902CFA	5	1	PPS	7.0M	BTX	400mØ	0.0	5.0	.80	2.0	77n	16m	.40		5	C	F40	FL31
65	JANM38510/00902CFB	5	1	PPS	7.0M	BTX	400mØ	0.0	5.0	.80	2.0	77n	16m	.40		5	C	F40	FL31
66	5496DM	5	1	PPS	10MØ	BTX	340m	0.0	5.0	.80	2.0	55n	16m	.40		5	C	F40	ML127e
67	5496FM	5	1	PPS	10MØ	BTX	340m	0.0	5.0	.80	2.0	55n	16m	.40		5	C		FL14g
68	7496DC	5	1	PPS	10MØ	BTX	395m	0.0	5.0	.80	2.0	40n	16m	.40		0	7	F457	ML127e
69	7496FC	5	1	PPS	10MØ	BTX	395m	0.0	5.0	.80	2.0	40n	16m	.40		0	7	F457	FL14g
70	7496PC	5	1	PPS	10MØ	BTX	395m	0.0	5.0	.80	2.0	40n	16m	.40		0	7	F457	ML170
71#	FLJ261-7496	5	1	PPS	10M	BTX	415m	0.0	5.0	.80	2.0	40n	16m	.40		0	7	F468	MLØ
72#	FLJ265-8496	5	1	PPS	10M	BTX	415m	0.0	5.0	.80	2.0	40n	16m	.40		2	8	F468	MLØ
73#	M74LS96P	5	1	PPS	10M	BTX	60m†	0.0	5.0	0.8	2.0	55nØ	4.0m	0.4		0	7	F40	ML409
74#	M53296P	5	1	PPS	10M*	BTX	29m	0.0	5.0	.80	2.0	35n	16m	.40		0	7	F40	ML5a
75	MC5496L	5	1	PPS	10M	BTX	240m†	0.0	5.0	.40%	2.4	40n	16m	.40		5	C	F40	ML127b
76	N7496B	5	1	PPS	10MØ	BTX	400m	0.0	5.0	.80	2.0	40nØ	16m	.40		0	7	F40	ML85
77	N7496N	5	1	PPS	10MØ	BTX	395m	0.0	5.0	.80	2.0	40n	16m	.40		0	7	F40	MO0001AE
78#	RC5496B	5	1	PPS	10MØ	BTX	340m♦	0.0	5.0	.80	2.0	40nØ	16m	.40		5	C	F40	ML132
79#	RC5496F	5	1	PPS	10MØ	BTX	340m♦	0.0	5.0	.80	2.0	40nØ	16m	.40		5	C	F40	ML61d
80#	RC5496W	5	1	PPS	10MØ	BTX	340m♦	0.0	5.0	.80	2.0	40nØ	16m	.40		5	C	F40	FL25
81	S5496B	5	1	PPS	10MØ	BTX	340m♦	0.0	5.0	.80	2.0	40nØ	16m	.40		5	C	F40	ML132
82	S5496F	5	1	PPS	10MØ	BTX	340m♦	0.0	5.0	.80	2.0	40nØ	16m	.40		5	C	F40	ML61d
83	S5496W	5	1	PPS	10MØ	BTX	340m♦	0.0	5.0	.80	2.0	40nØ	16m	.40		5	C	F40	FL25
84	SN54LS96J	5	1	PPS	10M	BTX	60m†	0.0	5.0	.70	2.0	55nØ	4.0m	.40		5	C	F40	ML61a
85	SN54LS96W	5	1	PPS	10M	BTX	60m†	0.0	5.0	.70	2.0	55nØ	4.0m	.40		5	C	F40	MO004AC
86	SN74LS96J	5	1	PPS	10M	BTX	60m†	0.0	5.0	.80	2.0	55nØ	4.0m	.40		0	7	F40	ML61a
87	SN74LS96N	5	1	PPS	10M	BTX	60m†	0.0	5.0	.80	2.0	55nØ	4.0m	.40		0	7	F40	ML48
88	SN5496J	5	1	PPS	10M	BTX	240m†	0.0	5.0	.80	2.0	55nØ	16m	.40		5	C	F40	ML61a
89	SN5496W	5	1	PPS	10M	BTX	240m†	0.0	5.0	.80	2.0	55nØ	16m	.40		5	C	F40	MO004AC
90	SN7496J	5	1	PPS	10M	BTX	240m†	0.0	5.0	.80	2.0	55nØ	16m	.40		0	7	F40	ML61a
91	SN7496N	5	1	PPS	10M	BTX	240m†	0.0	5.0	.80	2.0	55nØ	16m	.40		0	7	F40	ML48
92#	ZN5496E	5	1	PPS	10MØ	BTX	240m†	0.0	5.0	.80	2.0	55nØ	16m	.40		5	C	F457	ML5f
93#	ZN5496J	5	1	PPS	10MØ	BTX	240m†	0.0	5.0	.80	2.0	55nØ	16m	.40		5	C	F457	ML85b
94#	ZN7496E	5	1	PPS	10MØ	BTX	240m†	0.0	5.0	.80	2.0	55nØ	16m	.40		0	7	F457	ML5f
95#	ZN7496J	5	1	PPS	10MØ	BTX	240m†	0.0	5.0	.80	2.0	55nØ	16m	.40		0	7	F457	ML85b
96	JANM38510/30604BEA	5	1	PPS	17M	BTD	110m	0.0	5.5	.70	2.0	90n	4.0m	.40		5	C	F40	ML143
97	JANM38510/30604BEB	5	1	PPS	17M	BTD	110m	0.0	5.5	.70	2.0	90n	4.0m	.40		5	C	F40	ML143
98	JANM38510/30604BFA	5	1	PPS	17M	BTD	110m	0.0	5.5	.70	2.0	90n	4.0m	.40		5	C	F40	FL31

SYMBOLS AND CODES EXPLAINED IN INTERPRETER

7. SHIFT REGISTERS

IN ORDER OF(1)No.BITS/REG(2)No.REGISTERS (3)OP.CODE(4)MAX W/C FREQ(5)STRUCT(6)TYPE No

LINE No.	6 TYPE No.	ORGANIZATION 1 BITS PER REGISTER	2 No. REGS	3 OPER. CODE	4 MAX WORST CASE FREQ. (Hz)	5 STRUCTURE CODE	MAX OPER. POWER DISS. (W)	RATED POWER SUP. SPAN NEG. (V)	POS. (V)	INPUT LOGIC LEVELS MAX '0' (V)	MIN '1' (V)	MAX PROP. DELAY (s)	MIN OUTPUT SINK CURRENT (A)	@ OUT (V)	MIN CLOCK FREQ. (Hz)	OPER. TEMP. RANGE CODE -	+	DRAWINGS LOGIC/ BLOCK	OUTLINE
1	JANM38510/30604BFB	5	1	PPS	17M	BTD	110m	0.0	5.5	.70	2.0	90n	4.0m	.40		5	C	F40	FL31
2	JANM38510/30604CEA	5	1	PPS	17M	BTD	110m	0.0	5.5	.70	2.0	90n	4.0m	.40		5	C	F40	ML143
3	JANM38510/30604CEB	5	1	PPS	17M	BTD	110m	0.0	5.5	.70	2.0	90n	4.0m	.40		5	C	F40	ML143
4	JANM38510/30604CFA	5	1	PPS	17M	BTD	110m	0.0	5.5	.70	2.0	90n	4.0m	.40		5	C	F40	FL31
5	JANM38510/30604CFB	5	1	PPS	17M	BTD	110m	0.0	5.5	.70	2.0	90n	4.0m	.40		5	C	F40	FL31
6	N74LS96F	5	1	PPS	25MØ	BTD	100m	0.0	5.0	.80	2.0	40n	16m	.40		0	7	F40	ML127r
7	N74LS96N	5	1	PPS	25MØ	BTD	100m	0.0	5.0	.80	2.0	40n	16m	.40		0	7	F40	MO001AB
8	S54LS96F	5	1	PPS	25MØ	BTD	100m	0.0	5.0	.80	2.0	40n	16m	.40		5	C	F40	ML127r
9	S54LS96W	5	1	PPS	25MØ	BTD	100m	0.0	5.0	.80	2.0	40n	16m	.40		5	C	F40	FL14d
10#	GFB7496D	5	1	SSS	10M	BTX	240m	0.0	5.0	.80	2.0	55n	18m	0.0		0	7	F40	ML175
11	N8200F	5	2	PPS	15M*	BTX	580m	0.0	5.0	.40%	2.6	45n	9.6m	.40		0	7	PN24bx	ML133
12	N8200N	5	2	PPS	15M*	BTX	580m	0.0	5.0	.40%	2.6	45n	9.6m	.40		0	7	PN24bx	ML135
13	N8200Q	5	2	PPS	15M*	BTX	580m	0.0	5.0	.40%	2.6	45n	9.6m	.40		0	7	PN24bx	FL3b
14	N8201F	5	2	PPS	15M*	BTX	580m	0.0	5.0	.40%	2.6	45n	9.6m	.40		0	7	PN24fy	ML133
15	N8201N	5	2	PPS	15M*	BTX	580m	0.0	5.0	.40%	2.6	45n	9.6m	.40		0	7	PN24fy	ML135
16	N8201Q	5	2	PPS	15M*	BTX	580m	0.0	5.0	.40%	2.6	45n	9.6m	.40		0	7	PN24fy	FL3b
17#	RC8200N	5	2	PPS	15M*	BTX	580m	0.0	5.0	.40%	2.6	45n	9.6m	.40		5		F302	ML135
18#	RC8200Q	5	2	PPS	15M*	BTX	580m	0.0	5.0	.40%	2.6	45n	9.6m	.40		5		F302	FL3b
19#	RC8201F	5	2	PPS	15M*	BTX	580m	0.0	5.0	.40%	2.6	45n	9.6m	.40		5		F302a	ML133
20#	RC8201N	5	2	PPS	15M*	BTX	580m	0.0	5.0	.40%	2.6	45n	9.6m	.40		5		F302a	ML135
21#	RC8201Q	5	2	PPS	15M*	BTX	580m	0.0	5.0	.40%	2.6	45n	9.6m	.40		5		F302a	FL3b
22	S8200F	5	2	PPS	15M*	BTX	580m	0.0	5.0	.40%	2.6	45n	9.6m	.40		5	C	PN24bx	ML133
23	S8200N	5	2	PPS	15M*	BTX	580m	0.0	5.0	.40%	2.6	45n	9.6m	.40		5	C	PN24bx	ML135
24	S8200Q	5	2	PPS	15M*	BTX	580m	0.0	5.0	.40%	2.6	45n	9.6m	.40		5	C	PN24bx	FL3b
25	S8201F	5	2	PPS	15M*	BTX	580m	0.0	5.0	.40%	2.6	45n	9.6m	.40		5	C	PN24fy	ML133
26	S8201N	5	2	PPS	15M*	BTX	580m	0.0	5.0	.40%	2.6	45n	9.6m	.40		5	C	PN24fy	ML135
27	S8201Q	5	2	PPS	15M*	BTX	580m	0.0	5.0	.40%	2.6	45n	9.6m	.40		5	C	PN24fy	FL3b
28	JANM38510/05701BCA	5§	4$	SSS	700k	MCX	200m⍁	0.0	5.0	.85	3.95	1.2u	85u%	.50		5	C	F251	ML219
29	JANM38510/05701BCB	5§	4$	SSS	700k	MCX	200m⍁	0.0	5.0	.85	3.95	1.2u	85u%	.50		5	C	F251	ML219
30	JANM38510/05701BCC	5§	4$	SSS	700k	MCX	200m⍁	0.0	5.0	.85	3.95	1.2u	85u%	.50		5	C	F251	ML219
31	JANM38510/05701CCA	5§	4$	SSS	700k	MCX	200m⍁	0.0	5.0	1.25	3.25	800n	85u%	.50		5	C	F251	ML219
32	JANM38510/05701CCB	5§	4$	SSS	700k	MCX	200m⍁	0.0	5.0	1.25	3.25	800n	85u%	.50		5	C	F251	ML219
33	JANM38510/05701CCC	5§	4$	SSS	700k	MCX	200m⍁	0.0	5.0	1.25	3.25	800n	85u%	.50		5	C	F251	ML219
34	CM4006AE	5§	4$	SSS	1.2M	MCX	200m⍁	0.0	5.0	.01%Ø	4.99	500nØ				4	8	F126	ML19a
35	CM4006AD	5§	4$	SSS	1.5M	MCX	200m⍁	0.0	5.0	.01%Ø	4.99	400nØ				5	C	F126	ML19a
36	CD4006AE	5§	4$	SSS	2.0MØ	MCX	400u♦	0.0	10	.05%	9.95	250nØ	80u%	9.5		4	8	F126	MO001AB
37#	HBF4006AE	5§	4	SSS	2.0MØ	MCX	1.4m♦	0.0	10	.05%	9.9	250nØ	80u%	9.5		4	8	F126	MO001AB
38#	HBF4006AF	5§	4	SSS	2.0MØ	MCX	1.4m♦	0.0	10	.05%	9.9	250nØ	80u%	9.5		4	8	F126	MO001AD
39	CD4006AD	5§	4$	SSS	2.5MØ	MCX	600u♦	0.0	10	.05%	9.95	200nØ	140u%	9.5		5	C	F126	MO001AD
40	CD4006AF	5§	4$	SSS	2.5MØ	MCX	600u♦	0.0	10	.05%	9.95	200nØ	140u%	9.5		5	C	F126	MO001AB
41	CD4006AH	5§	4$	SSS	2.5MØ	MCX	600u♦	0.0	10	.05%	9.95	200nØ	140u	9.5		5	C	F126	CH1
42▼	CD4006AY#	5§	4$	SSS	2.5MØ	MCX	600u♦	0.0	10	.05%	9.95	200nØ	140u%	9.5		4	8	F126	MO001ab
43	CM4006AF	5§	4$	SSS	2.5MØ	MCX	600u♦	0.0	10	.05%	9.95	200nØ	140u%	9.5		5	C	F126	ML19a
44#	HBC4006AD	5§	4$	SSS	2.5MØ	MCX	600u♦	0.0	10	.05%	9.9	200nØ	140u%	9.5		5	C	F126	MO001AD
45#	HBC4006AF	5§	4$	SSS	2.5MØ	MCX	600u♦	0.0	10	.05%	9.9	200nØ	140u%	9.5		5	C	F126	MO001AD
46#	HBC4006AK	5§	4$	SSS	2.5MØ	MCX	600u♦	0.0	10	.05%	9.9	200nØ	140u%	9.5		5	C	F126	MO004AF
47	SCL4006ABC	5§	4$	SSS	3.0MØ	MCA	300u♦	0.0	15	4.0	11	240nØ	1.1mØ	1.5		5	C	F540	MO001AA
48	MC14006BAL	5§	4$	SSS	6.0MØ	MCX	300u♦Ø	0.0	15	4.0	11	160nØ	3.4m	1.5		5	C	F236	TO116
49	MC14006BCL	5§	4$	SSS	6.0MØ	MCX	1.2m♦Ø	0.0	15	4.0	11	160nØ	3.0m	1.5		4	8	F236	TO116
50	MC14006BCP	5§	4$	SSS	6.0MØ	MCX	1.2m♦Ø	0.0	15	4.0	11	160nØ	3.0m	1.5		4	8	F236	ML124
51#	HEF4006B	5§	4	SSS	10M	MCX	400m⍁	0.0	10	3.0	7.0	60n†	2.0m	.50		4	8	F514	TO116
52	CD4006BD	5§	4$	SSS	16M†	MCX	500m⍁	0.0	15	4.0	11	80n†	6.8m†	1.5		5	C	F503	MO001AD
53	CD4006BE	5§	4$	SSS	16M†	MCX	500m⍁	0.0	15	4.0	11	80n†	6.8m†	1.5		4	8	F503	MO001AB
54	CD4006BF	5§	4$	SSS	16M†	MCX	500m⍁	0.0	15	4.0	11	80n†	6.8m†	1.5		5	C	F503	MO001AB
55	CD4006BH	5§	4$	SSS	16M†	MCX	500m⍁	0.0	15	4.0	11	80n†	6.8m†	1.5		5	C	F503	CH1
56#	HCC4006BD	5§	4$	SSS	16M†	MCX	500m⍁	0.0	15	4.0	11	80n†	6.8m†	1.5		5	C	F503	MO001AD
57#	HCC4006BF	5§	4$	SSS	16M†	MCX	500m⍁	0.0	15	4.0	11	80n†	6.8m†	1.5		5	C	F503	MO001AD
58#	HCC4006BK	5§	4$	SSS	16M†	MCX	500m⍁	0.0	15	4.0	11	80n†	6.8m†	1.5		5	C	F503	MO004AF
59#	HCF4006BE	5§	4$	SSS	16M†	MCX	500m⍁	0.0	15	4.0	11	80n†	6.8m†	1.5		4	8	F503	MO001AB
60#	HCF4006BF	5§	4$	SSS	16M†	MCX	500m⍁	0.0	15	4.0	11	80n†	6.8m†	1.5		4	8	F503	MO001AD
61	4006BDC	5§	4$	SSS	18MØ	MCX	9.0m♦	0.0	15	4.0	11	80n	4.5m	1.5		4	8	F471	TO116
62	4006BDM	5§	4$	SSS	18MØ	MCX	9.0m♦	0.0	15	4.0	11	80n	4.5m	1.5		5	C	F471	TO116
63	4006BFC	5§	4$	SSS	18MØ	MCX	9.0m♦	0.0	15	4.0	11	80n	4.5m	1.5		4	8	F471	TO86
64	4006BFM	5§	4$	SSS	18MØ	MCX	9.0m♦	0.0	15	4.0	11	80n	4.5m	1.5		5	C	F471	TO86
65	4006BPC	5§	4$	SSS	18MØ	MCX	9.0m♦	0.0	15	4.0	11	80n	4.5m	1.5		4	8	F471	ML261
66#	HEF4006BD	5§	4$	SSS	18M*	MCX	400m⍁	0.0	15	4.0	11	70n	3.0m	1.5		4	8	F471	ML93j
67#	HEF4006BP	5§	4$	SSS	18M*	MCX	400m⍁	0.0	15	4.0	11	70n	3.0m	1.5		4	8	F471	ML71g
68▼#	HEF4006BT	5§	4	SSS	18M*	MCX	200m△	0.0	15	7.0	3.0	80n	1.3	.50	15M	4	8	F471	FL82
69#	HEF4006P	5§	4$	SSS	18M*	MCX	400m	0.0	15	4.5	10.5	50n	3.6m			4	8	F471	ML71g
70	MUF5	6	1		2.0M		375m	0.0	5.0	0.0	5.0	40n				0	7	F380	PL10
71	I100	6	1		5.0M	BDX	450m	4.8	5.2	0.0	5.0	50n				0	7		PL⍁
72	M207	6	1		10M	BTX	240m			.40	2.0	35n				0	7		PL⍁
73	M206	6	1		15M	BTX	255m			.40	2.4	30n				0	7		
74	F10176DC	6	1	PPS		BEX	457m♦†	5.2	0.0	-1.4	-1.1	4.5n	50m⍁			0	7	F543	ML127s
75	F10176FC	6	1	PPS		BEX	457m♦†	5.2	0.0	-1.4	-1.1	4.5n	50m⍁			0	7	F543	FL14j
76	F10176PC	6	1	PPS		BEX	457m♦†	5.2	0.0	-1.4	-1.1	4.5n	50m⍁			0	7	F543	ML2b
77	F10186DC	6	1	PPS		BEX	457m♦†	5.2	0.0	-1.4	-1.1	4.5n	50m⍁			0	7	F544	ML127s
78	F10186FC	6	1	PPS		BEX	457m♦†	5.2	0.0	-1.4	-1.1	4.5n	50m⍁			0	7	F544	FL14j
79	F10186PC	6	1	PPS		BEX	457m♦†	5.2	0.0	-1.4	-1.1	4.5n	50m⍁			0	7	F544	ML2b
80	F10576DM	6	1	PPS		BEX	457m♦†	5.2	0.0	-1.4	-1.1	4.5n	50m⍁			5	C	F543	ML127s
81	F10576FM	6	1	PPS		BEX	457m♦†	5.2	0.0	-1.4	-1.1	4.5n	50m⍁			5	C	F543	FL14j
82	F10586DM	6	1	PPS		BEX	457m♦†	5.2	0.0	-1.4	-1.1	4.5n	50m⍁			5	C	F544	ML127s
83	F10586FM	6	1	PPS		BEX	457m♦†	5.2	0.0	-1.4	-1.1	4.5n	50m⍁			5	C	F544	FL14j
84	AM25S07DC	6	1	PPS		BTD	720m	0.0	5.0	.80	2.0	17n	20m	.50		0	7	F284	ML127k
85	AM25S07DM	6	1	PPS		BTD	720m	0.0	5.0	.80	2.0	17n	20m	.50		5	C	F284	ML62c
86	AM25S07FM	6	1	PPS		BTD	720m	0.0	5.0	.80	2.0	17n	20m	.50		5	C	F284	FL33b
87	AM25S07PC	6	1	PPS		BTD	720m	0.0	5.0	.80	2.0	17n	20m	.50		0	7	F284	ML89a
88#	FLJ361-74118	6	1	PPS		BTX	300m	0.0	5.0	.80	2.0	29n	16m	.40		0	7	F368	ML2k
89#	FLJ365-84118	6	1	PPS		BTX	300m	0.0	5.0	.80	2.0	29n	16m	.40		2	8	F368	ML2k
90#	FLJ371-74119	6	1	PPS		BTX	300m	0.0	5.0	.80	2.0	29n	16m	.40		0	7	F369	ML118g
91#	FLJ375-84119	6	1	PPS		BTX	300m	0.0	5.0	.80	2.0	29n	16m	.40		2	8	F369	ML118g
92#	FLJ531-74174	6	1	PPS		BTX	177m	0.0	5.0	.80	2.0	15n§	16m	.40		0	7	F350	ML2k
93#	FLJ535-84174	6	1	PPS		BTX	177m	0.0	5.0	.80	2.0	15n§	16m	.40		2	8	F350	ML2k
94#	HEF40174P	6	1	PPS		MCX	400m⍁	0.0	10	3.0	7.0		2.0m	.50		4	8	F405	ML⍁
95▼	N74S174F	6	1	PPS	75mØ	BTD	720m	0.0	5.0	.80	2.0	13n	16m	.40		0	7	F350	ML127r
96▼	N74S174N	6	1	PPS	75mØ	BTD	720m	0.0	5.0	.80	2.0	13n	16m	.40		0	7	F350	MO001AB
97#	uPB10176D	6	1	PPS	150m%		550m⍁	0.0	5.0	-1.8*Ø	-.80#	2.0n§						F417	ML127s
98	MC14174BAL	6	1	PPS	6.5MØ	MCX	300u♦Ø	0.0	15	4.0	11	150nØ	3.4m	1.5		5	C	F399	ML157a
99	MC14174BCL	6	1	PPS	6.5MØ	MCX	1.2m♦Ø	0.0	15	4.0	11	150nØ	3.0m	1.5		4	8	F399	ML157a

7. SHIFT REGISTERS

IN ORDER OF(1)No.BITS/REG(2)No.REGISTERS
(3)OP.CODE(4)MAX W/C FREQ(5)STRUCT(6)TYPE No

LINE No.	6 TYPE No.	ORGANIZATION 1 BITS PER REGISTER	2 No. REGS	3 OPER. CODE	4 MAX WORST CASE FREQ. (Hz)	5 STRUCTURE CODE	MAX OPER. POWER DISS. (W)	RATED POWER SUP. SPAN NEG. (V)	POS. (V)	INPUT LOGIC LEVELS MAX '0' (V)	MIN '1' (V)	MAX PROP. DELAY (s)	MIN OUTPUT SINK CURRENT (A)	@ OUT (V)	MIN CLOCK FREQ. (Hz)	OPER. TEMP. RANGE CODE -	+	DRAWINGS LOGIC/ BLOCK	OUTLINE
1	MC14174BCP	6	1	PPS	6.5MØ	MCX	1.2m♦Ø	0.0	15	4.0	11	150nØ	3.0m	1.5		4	8	F399	ML145
2▼	CD40174BH	6	1	PPS	15M†	MCX	500m☐	0.0	15	4.0	11	60n†	6.8m†	1.5		5	C	F513	
3	340174DC	6	1	PPS	16MΔ†	MCX	4.0m♦	0.0	10	3.0	7.0	45nØ	1.2m	.50		4	8	F412	ML127s
4	340174DM	6	1	PPS	16MΔ†	MCX	2.0m♦	0.0	10	3.0	7.0	45nØ	1.2m	.50		5	C	F412	ML127s
5	340174FC	6	1	PPS	16MΔ†	MCX	4.0m♦	0.0	10	3.0	7.0	45nØ	1.2m	.50		4	8	F412	FL14g
6	340174FM	6	1	PPS	16MΔ†	MCX	2.0m♦	0.0	10	3.0	7.0	45nØ	1.2m	.50		5	C	F412	FL14g
7	340174PC	6	1	PPS	16MΔ†	MCX	4.0m♦	0.0	10	3.0	7.0	45nØ	1.2m	.50		4	8	F412	ML170
8#	HEF40174B	6	1	PPS	16M	MCX	400m☐	0.0	10	3.0	7.0	45n	2.0m	.50		4	8	F405	ML2g
9#	HEF40174BD	6	1	PPS	20M*	MCX	400m☐	0.0	15	4.0	11	50n	3.0m	1.5		4	8	F412	ML127x
10#	HEF40174BP	6	1	PPS	20M*	MCX	400m☐	0.0	15	4.0	11	50n	3.0m	1.5		4	8	F412	ML89j
11	JANM38510/30106BEA	6	1	PPS	25MΔ*	BTD	143m	0.0	5.5	.70	2.0	52n	4.0m	.40		5	C	F350	ML143
12	JANM38510/30106BEB	6	1	PPS	25MΔ*	BTD	143m	0.0	5.5	.70	2.0	52n	4.0m	.40		5	C	F350	ML143
13	JANM38510/30106BFA	6	1	PPS	25MΔ*	BTD	143m	0.0	5.5	.70	2.0	52n	4.0m	.40		5	C	F350	FL31
14	JANM38510/30106BFB	6	1	PPS	25MΔ*	BTD	143m	0.0	5.5	.70	2.0	52n	4.0m	.40		5	C	F350	FL31
15	JANM38510/30106CEA	6	1	PPS	25MΔ*	BTD	143m	0.0	5.5	.70	2.0	52n	4.0m	.40		5	C	F350	ML143
16	JANM38510/30106CEB	6	1	PPS	25MΔ*	BTD	143m	0.0	5.5	.70	2.0	52n	4.0m	.40		5	C	F350	ML143
17	JANM38510/30106CFA	6	1	PPS	25MΔ*	BTD	143m	0.0	5.5	.70	2.0	52n	4.0m	.40		5	C	F350	FL31
18	JANM38510/30106CFB	6	1	PPS	25MΔ*	BTD	143m	0.0	5.5	.70	2.0	52n	4.0m	.40		5	C	F350	FL31
19#	M53374P	6	1	PPS	25MΔ	BTX	225m	0.0	5.0	.80	2.0	35nΔ				0	7	F350	ML146
20▼	N74174F	6	1	PPS	25MØ	BTX	325m	0.0	5.0	.80	2.0	30n	16m	.40		0	7	F350	ML127r
21▼	N74174N	6	1	PPS	25MØ	BTX	325m	0.0	5.0	.80	2.0	30n	16m	.40		0	7	F350	MO001AE
22▼	S54174F	6	1	PPS	25MØ	BTX	325m	0.0	5.0	.80	2.0	30n	16m	.40		5	C	F350	ML127r
23▼	S54174W	6	1	PPS	25MØ	BTX	325m	0.0	5.0	.80	2.0	30n	16m	.40		5	C	F350	FL14d
24#	SFC4174E	6	1	PPS	25MΔ	BTX	225m	0.0	5.0	.80	2.0	35nΔ				0	7	F350	ML48
25#	SFC4174EM	6	1	PPS	25MΔ	BTX	225m	0.0	5.0	.80	2.0	35nΔ				5	C	F350	ML48
26#	SFC4174ET	6	1	PPS	25MΔ	BTX	225m	0.0	5.0	.80	2.0	35nΔ				2	8	F350	ML48
27	SN54174J	6	1	PPS	25MΔ	BTX	325m	0.0	5.0	.80	2.0	35n	16m	.40		5	C	F555	ML61a
28	SN54174W	6	1	PPS	25MΔ	BTX	325m	0.0	5.0	.80	2.0	35n	16m	.40		5	C	F555	MO004AC
29	SN74174J	6	1	PPS	25MΔ	BTX	325m	0.0	5.0	.80	2.0	35n	16m	.40		0	7	F555	ML61a
30	SN74174N	6	1	PPS	25MΔ	BTX	325m	0.0	5.0	.80	2.0	35n	16m	.40		0	7	F555	ML48
31#	ZN54174E	6	1	PPS	25MΔ	BTX	225m	0.0	5.0	.80	2.0	35nΔ				5	C	F350	TO116
32#	ZN54174J	6	1	PPS	25MΔ	BTX	225m	0.0	5.0	.80	2.0	35nΔ				5	C	F350	ML93e
33#	ZN74174E	6	1	PPS	25MΔ	BTX	225m	0.0	5.0	.80	2.0	35nΔ				0	7	F350	TO116
34#	ZN74174J	6	1	PPS	25MΔ	BTX	225m	0.0	5.0	.80	2.0	35nΔ				0	7	F350	ML93e
35	T114	6	1	PPS	25M*%	TTL	420m	0.0	5.0	.80	1.8	17n†	16m			0	7	F523	PL☐
36	54LS378DM	6	1	PPS	30MØ	BTD	135m	0.0	5.0	.70	2.0	27nØ	4.0m	.40		5	C	F451	ML157e
37	54LS378FM	6	1	PPS	30MØ	BTD	135m	0.0	5.0	.70	2.0	27nØ	4.0m	.40		5	C	F451	FL14j
38	74LS378DC	6	1	PPS	30MØ	BTD	135m	0.0	5.0	.80	2.0	27nØ	8.0m	.50		0	7	F451	ML157e
39	74LS378FC	6	1	PPS	30MØ	BTD	135m	0.0	5.0	.80	2.0	27nØ	8.0m	.50		0	7	F451	FL14j
40	74LS378PC	6	1	PPS	30MØ	BTD	135m	0.0	5.0	.80	2.0	27nØ	8.0m	.50		0	7	F451	ML170
41▼	N74LS174N	6	1	PPS	30MØ	BTD	130m	0.0	5.0	.80	2.0	24n				0	7	F350	MO001AE
42▼	N74LS378F	6	1	PPS	30MØ	BTD	120m	0.0	5.0	.80	2.0	21n	16m	.40		0	7	F536	ML127r
43▼	N74LS378N	6	1	PPS	30MØ	BTD	120m	0.0	5.0	.80	2.0	21n	16m	.40		0	7	F536	MO001AE
44▼	S54LS378F	6	1	PPS	30MØ	BTD	120m	0.0	5.0	.80	2.0	21n	16m	.40		5	C	F536	ML127r
45▼	S54LS378W	6	1	PPS	30MØ	BTD	120m	0.0	5.0	.80	2.0	21n	16m	.40		5	C	F536	F14d
46♦	SN54LS174J	6	1	PPS	30MØ	BTD	130m	0.0	5.0	.80	2.0	35n	4.0m	.40		5	C	F350	ML157a
47♦	SN54LS174W	6	1	PPS	30MØ	BTD	130m	0.0	5.0	.80	2.0	35n	4.0m	.40		5	C	F350	MO004AC
48♦	SN54LS378J	6	1	PPS	30MØ	BTD	135m	0.0	5.0	.70	2.0	27nØ	4.0m	.40		5	C	F451	ML61a
49♦	SN54LS378W	6	1	PPS	30MØ	BTD	135m	0.0	5.0	.70	2.0	27nØ	4.0m	.40		5	C	F451	FL34
50♦	SN74LS174J	6	1	PPS	30MØ	BTD	130m	0.0	5.0	.80	2.0	35n	8.0m	.50		0	7	F350	ML61a
51♦	SN74LS174N	6	1	PPS	30MØ	BTD	130m	0.0	5.0	.80	2.0	35n	8.0m	.50		0	7	F350	ML209
52♦	SN74LS174W	6	1	PPS	30MØ	BTD	130m	0.0	5.0	.80	2.0	28n	8.0m	.50		0	7	F350	FL34
53♦	SN74LS378J	6	1	PPS	30MØ	BTD	135m	0.0	5.0	.80	2.0	27nØ	4.0m	.40		0	7	F451	ML61a
54♦	SN74LS378N	6	1	PPS	30MØ	BTD	135m	0.0	5.0	.80	2.0	27nØ	4.0m	.40		0	7	F451	ML209
55	SN74LS378W	6	1	PPS	30MØ	BTD	135m	0.0	5.0	.80	2.0	27nØ	4.0m	.40		0	7	F451	FL63
56▼	N74LS174B	6	1	PPS	30M*Δ	BTX	110m†	0.0	5.0	.80	2.0	23n				0	7	F350	ML132
57▼	N74LS174F	6	1	PPS	30M*Δ	BTX	110m†	0.0	5.0	.80	2.0	23n				0	7	F350	M127r
58▼#	RC54LS174B	6	1	PPS	30M*Δ	BTX	110m†	0.0	5.0	.80	2.6	23n				5	C	F350	FL63
59▼#	RC54LS174F	6	1	PPS	30M*Δ	BTX	110m†	0.0	5.0	.80	2.6	23n				5	C	F350	ML132
60▼#	RC54LS174W	6	1	PPS	30M*Δ	BTX	110m†	0.0	5.0	.80	2.6	23n				5	C	F350	ML127r
61▼	S54LS174B	6	1	PPS	30M*Δ	BTX	110m†	0.0	5.0	.80	2.0	23n				5	C	F350	ML132
62▼	S54LS174F	6	1	PPS	30M*Δ	BTX	110m†	0.0	5.0	.80	2.0	23n				5	C	F350	ML127m
63▼	S54LS174W	6	1	PPS	30M*Δ	BTX	110m†	0.0	5.0	.80	2.0	23n				5	C	F350	
64	54LS174J	6	1	PPS	35MØ	BTD	130m♦	0.0	5.0	.70	2.0	25nØ	4.0m	.40		5	C	F350	ML☐
65	54LS174W	6	1	PPS	35MØ	BTD	130m♦	0.0	5.0	.70	2.0	25nØ	4.0m	.40		5	C	F350	FL14h
66	AM25LS07DC	6	1	PPS	40M	BTD	130m	0.0	5.0	.80	2.0	20n	8.0m	.45		0	7	F284	ML127k
67	AM25LS07DM	6	1	PPS	40M	BTD	130m	0.0	5.0	.70	2.0	20n	8.0m	.45		5	C	F284	ML62c
68	AM25LS07FM	6	1	PPS	40M	BTD	130m	0.0	5.0	.70	2.0	20n	8.0m	.45		5	C	F284	FL33b
69	AM25LS07PC	6	1	PPS	40M	BTD	130m	0.0	5.0	.80	2.0	20n	8.0m	.45		0	7	F284	ML89a
70	AM25LS174DC	6	1	PPS	40M	BTD	130m	0.0	5.0	.80	2.0	20n	8.0m	.45		0	7		
71	AM25LS174DM	6	1	PPS	40M	BTD	130m	0.0	5.0	.70	2.0	20n	8.0m	.45		5	C		
72	AM25LS174FM	6	1	PPS	40M	BTD	130m	0.0	5.0	.70	2.0	20n	8.0m	.45		5	C		
73	AM25LS174PC	6	1	PPS	40M	BTD	130m	0.0	5.0	.80	2.0	20n	8.0m	.45		0	7		
74	9LS174DC	6	1	PPS	55MΔ†	BTD	136m♦	0.0	5.25	.80	2.0	20n	4.0m	.40		0	7	F405	ML127s
75	9LS174DM	6	1	PPS	55MΔ†	BTD	143m♦	0.0	5.0	.70	2.0	20n	4.0m	.40		5	C	F405	ML127s
76	9LS174FC	6	1	PPS	55MΔ†	BTD	136m♦	0.0	5.25	.80	2.0	20n	4.0m	.40		0	7	F405	FL14g
77	9LS174FM	6	1	PPS	55MΔ†	BTD	143m♦	0.0	5.0	.70	2.0	20n	4.0m	.40		5	C	F405	FL14g
78	9LS174PC	6	1	PPS	55MΔ†	BTD	136m♦	0.0	5.25	.80	2.0	20n	4.0m	.40		0	7	F405	ML170
79	SN54S174J	6	1	PPS	75MΔ	BTX	720m	0.0	5.0	.80	2.0	22n	20m	.50		5	C	F350	ML61a
80	SN54S174W	6	1	PPS	75MΔ	BTX	720m	0.0	5.0	.80	2.0	22n	20m	.50		5	C	F350	MO004AC
81	SN74S174J	6	1	PPS	75MΔ	BTX	720m	0.0	5.0	.80	2.0	22n	20m	.50		0	7	F350	ML61a
82	SN74S174N	6	1	PPS	75MΔ	BTX	720m	0.0	5.0	.80	2.0	22n	20m	.50		0	7	F350	ML48
83	10176F	6	1	PPS	150M%†	BEX	460m	5.2	0.0	-1.6	-.96	4.0n				3	8		ML127m
84	MC10176L	6	1	PPS	150M%†	BEX	460m†	5.0	0.0	-1.4	-1.1	4.5n				3	8	F349	ML61e
85	MC10176P	6	1	PPS	150M%†	BEX	460m†	5.0	0.0	-1.4	-1.1	4.5n				3	8	F349	ML145
86	MC10186L	6	1	PPS	150M%†	BEX	460m†	5.0	0.0	-1.6%	-.96	2.5n				3	8	F378	ML61e
87	F100151DC	6	1	PPS	400MØ	BEX	891m	4.5	0.0	-1.4	-1.1	3.0n				0	8	F545	ML133h
88	F100151FC	6	1	PPS	400MØ	BEX	891m	4.5	0.0	-1.4	-1.1	3.0n				0	8	F545	FL48
89	RH806	6	1	SPS	500k	BDXØ	2.3	0.0	15	1.0†	15†					0	7	F265	
90	RD806	6	1	SPS	5.0M	BDXØ	850m	0.0	5.0	.30†	5.0†					0	7	F265	
91#	RC8275B	8				MNG	1.5 ☐	12	5.0	.65	3.0§		1.6m	.45		0	7	B163b	ML256
92#	RC8275E	8				MNG	800m	12	5.0	.65	3.0§		1.6m	.40		2	8	B296b	ML272
93#	RC8275R	8				MNG	1.5 ☐	12	5.0	.65	3.0§		1.6m	.45		2	8	B163	ML34c
94	CM4014AD	8§		PSS	1.5M	MCX	200m☐	0.0	5.0	.01%Ø	4.99	750nØ				5	C	F79	ML4g
95	MGF8	8	1		2.0M		500m	0.0	5.0	0.0	5.0	25n				0	7	F383	PL10
96	I106	8	1		5.0M	BDX	600m	4.8	5.2	0.0	5.0	50n				0	7		PL☐
97	I107	8	1		5.0M	BDX	600m	4.8	5.2	0.0	5.0	50n				0	7		PL☐
98	M203	8	1		20M	BTX	175m	0.0	5.0	.40	2.4	30n				0	7		
99▼#	HD14034B	8	1	BPS	3.0M☐	MCX		0.0	15	4.0	11	350n§				4	8	PN24dc	
100▼#	HD74LS299	8	1	BPS	25MΔ	BTD	300m	0.0	5.0	.80	2.0	30n	40u	5.25	25M	2	7	F427	ML274
101▼#	HD74LS299P	8	1	BPS	25MΔ	BTD	300m	0.0	5.0	.80	2.0	30n	40u	5.25	25M	2	7	F427	ML161g
102	93L38DC	8	1	PPS		BTX	165m	0.0	5.0	.80	2.0	95n	8.0m	.30		0	7	F254	ML127e

SYMBOLS AND CODES EXPLAINED IN INTERPRETER

7. SHIFT REGISTERS

IN ORDER OF(1)No.BITS/REG(2)No.REGISTERS (3)OP.CODE(4)MAX W/C FREQ(5)STRUCT(6)TYPE No

LINE No.	6 TYPE No.	ORGANIZATION 1 BITS PER REGISTER	ORGANIZATION 2 No. REGS	3 OPER. CODE	4 MAX WORST CASE FREQ. (Hz)	5 STRUCTURE CODE	MAX OPER. POWER DISS. (W)	RATED POWER SUP. SPAN NEG. (V)	RATED POWER SUP. SPAN POS. (V)	INPUT LOGIC LEVELS MAX '0' (V)	INPUT LOGIC LEVELS MIN '1' (V)	MAX PROP. DELAY (s)	MIN OUTPUT SINK CURRENT (A)	MIN OUTPUT SINK CURRENT @ OUT (V)	MIN CLOCK FREQ. (Hz)	OPER. TEMP. RANGE CODE -	OPER. TEMP. RANGE CODE +	DRAWINGS LOGIC/ BLOCK	DRAWINGS OUTLINE
1	93L38DM	8	1	PPS		BTX	165m	0.0	5.0	.70	2.0	95n	4.8m	.30		5	C	F254	ML127e
2	93L38FC	8	1	PPS		BTX	165m	0.0	5.0	.80	2.0	95n	8.0m	.30		0	7	F254	FL14g
3	93L38FM	8	1	PPS		BTX	165m	0.0	5.0	.70	2.0	95n	4.8m	.30		5	C	F254	FL14g
4	93L38PC	8	1	PPS		BTX	165m	0.0	5.0	.80	2.0	95n	8.0m	.30		0	7	F254	ML170
5	9338DC	8	1	PPS		BTX	650m	0.0	5.0	.80	2.0	50n	16m	.40		0	7	F254	ML127e
6	9338DM	8	1	PPS		BTX	650m	0.0	5.0	.80	2.0	50n	16m	.40		5	C	F254	ML127e
7	9338FC	8	1	PPS		BTX	650m	0.0	5.0	.80	2.0	50n	16m	.40		0	7	F254	FL14g
8	9338FM	8	1	PPS		BTX	650m	0.0	5.0	.80	2.0	50n	16m	.40		5	C	F254	FL14g
9	9338PC	8	1	PPS		BTX	650m	0.0	5.0	.80	2.0	50n	16m	.40		0	7	F254	ML170
10	AM93L38DC	8	1	PPS		BTX	185m♦	0.0	5.0	.70	2.0	100n	4.9m	.30		0	7	F254	ML127d
11	AM93L38DM	8	1	PPS		BTX	185m♦	0.0	5.0	.70	2.0	100n	4.9m	.30		5	C	F254	ML62c
12	AM93L38FM	8	1	PPS		BTX	185m♦	0.0	5.0	.70	2.0	100n	4.9m	.30		5	C	F254	FL33b
13	AM93L38PC	8	1	PPS		BTX	185m♦	0.0	5.0	.70	2.0	100n	4.9m	.30		0	7	F254	ML89a
14	AM9338DC	8	1	PPS		BTX	495m♦	0.0	5.0	.80	2.0	42n	16m	.40		0	7	F254	ML127k
15	AM9338DM	8	1	PPS		BTX	495m♦	0.0	5.0	.80	2.0	42n	16m	.40		5	C	F254	ML62c
16	AM9338FM	8	1	PPS		BTX	495m♦	0.0	5.0	.80	2.0	42n	16m	.40		5	C	F254	FL33b
17	AM9338PC	8	1	PPS		BTX	495m♦	0.0	5.0	.80	2.0	42n	16m	.40		0	7	F254	ML89a
18▼#	HD14014B	8	1	PPS		MCX		0.0	15	4.0	11	265n			3.0M#	4	8	F274	
19▼#	HD14021B	8	1	PPS		MCX		0.0	15	4.0	11	265n			3.0M#	4	8	PN16dp	
20#	HCC4034BD	8	1	PPS§	6.0m†	MCX	500mØ	0.0	15	4.0	11	140n†	6.8m†	1.5		5	C	F508	MO015AC
21#	HCF4034BD	8	1	PPS§	6.0m†	MCX	500mØ	0.0	15	4.0	11	140n†	6.8m†	1.5		4	8	F508	MO015AC
22#	HCF4034BE	8	1	PPS§	6.0m†	MCX	500mØ	0.0	15	4.0	11	140n†	6.8m†	1.5		4	8	F508	MO015AA
23	3800-4-6H	8△	1	PPS	200k	MXX	180m	27	0.0	-2.0	-10	5.0u				5	8	F171	ML70
24	3800-9-6H	8△	1	PPS	200k	MXX	180m	27	0.0	-2.0	-10	5.0u				0	7	F171	ML70
25▼	SCL4034BC	8	1	PPS	2.5MØ	MCA	300u♦	0.0	10	.05%	9.95	480nØ	175u	.50		5	C	F177	
26▼	SCL4034BD	8	1	PPS	3.0MØ	MCA	300u♦	0.0	15	4.0	11	400nØ	1.1mØ	1.5		5	C	F177	ML39a
27▼	SCL4034BE	8	1	PPS	3.0MØ	MCA	300u♦	0.0	15	4.0	11	400nØ	1.1mØ	1.5		4	8	F177	ML39b
28▼	SCL4034BH	8	1	PPS	3.0MØ	MCA	300u♦	0.0	15	4.0	11	400nØ	1.1mØ	1.5		5	C	F177	CHØ
29	CD4034AD	8	1	PPS	3.0MØ	MCX	6.0m♦	0.0	10	.05%	9.95	480nØ	175u	.50		5	C	F177	MO015AC
30	CD4034AE	8	1	PPS	3.0MØ	MCX	14m♦	0.0	10	.05%	9.95	480nØ	175u	.50		4	8	F177	MO001AA
31	CD4034AH	8	1	PPS	3.0MØ	MCX	6.0m♦	0.0	10	.05%	9.95	480nØ	175u	.50		5	C	F177	CH4
32▼	CD4034AK#	8	1	PPS	3.0MØ	MCX	6.0m♦	0.0	10	.05%	9.95	480nØ	175u	.50		5	C	F177	FL28
33#	HBF4034AD	8	1	PPS	3.0MØ	MCX	14m♦	0.0	10	.05%	9.95	480nØ	175u	.50		4	8	F177	ML23b
34#	HBF4034AE	8	1	PPS	3.0MØ	MCX	14m♦	0.0	10	.05%	9.95	480nØ	175u	.50		4	8	F177	ML88g
35	AM25L02DC	8	1	PPS	3.5MΔ	BTX	175m♦	0.0	5.0	.70	2.0	140n	4.9m	.30		0	7	F257	ML62
36	AM25L02DM	8	1	PPS	3.5MΔ	BTX	165m♦	0.0	5.0	.70	2.0	140n	4.9m	.30		5	C	F257	ML62
37	AM25L02FM	8	1	PPS	3.5MΔ	BTX	165m♦	0.0	5.0	.70	2.0	140n	4.9m	.30		5	C	F257	FL33
38	AM25L02PC	8	1	PPS	3.5MΔ	BTX	175m♦	0.0	5.0	.70	2.0	140n	4.9m	.30		0	7	F257	ML89a
39	AM25L03DC	8	1	PPS	3.5MΔ	BTX	165m♦	0.0	5.0	.70	2.0	140n	4.9m	.30		0	7	F257	ML62
40	AM25L03DM	8	1	PPS	3.5MΔ	BTX	155m♦	0.0	5.0	.70	2.0	140n	4.9m	.30		5	C	F257	ML62
41	AM25L03FM	8	1	PPS	3.5MΔ	BTX	155m♦	0.0	5.0	.70	2.0	140n	4.9m	.30		5	C	F257	FL33
42	AM25L03PC	8	1	PPS	3.5MΔ	BTX	165m♦	0.0	5.0	.70	2.0	140n	4.9m	.30		0	7	F257	ML89a
43	MC14034BAL	8	1	PPS	4.0MØ	MCX	300u♦Ø	0.0	15	4.0	11	290nØ	3.4m	1.5		5	C	F423	ML207b
44	MC14034BCL	8	1	PPS	4.0MØ	MCX	3.0m♦Ø	0.0	15	4.0	11	290nØ	3.0m	1.5		4	8	F423	ML207b
45	MC14034BCP	8	1	PPS	4.0MØ	MCX	3.0m♦Ø	0.0	15	4.0	11	290nØ	3.0m	1.5		4	8	F423	ML39
46	SCL4034AH	8	1	PPS	5.0Mt Ø	MCX	6.0m♦	0.0	10	.05%	9.95	480nØ	88u%	9.5		5	C	F177	CHØ
47▼	SCL4034D	8	1	PPS	5.0Mt Ø	MCX	6.0m♦	0.0	10	.05	9.95	480nØ	88u%	9.5		5	C	F177	ML105
48▼	SCL4035ABC	8	1	PPS	5.0Mt Ø	MCX	6.0m♦	0.0	10	.05%	9.95	480nØ	88u%	9.5		5	C	F177	ML118e
49▼	SCL4035ABE	8	1	PPS	5.0Mt Ø	MCX	6.0m♦	0.0	10	.05%	9.95	480nØ	88u%	9.5		4	8	F177	ML105
50	CD4034BD	8	1	PPS§	6.0Mt	MCX	500mØ	0.0	15	4.0	11	140n†	6.8m†	1.5		5	C	F508	MO015AC
51	CD4034BE	8	1	PPS§	6.0Mt	MCX	500mØ	0.0	15	4.0	11	140n†	6.8m†	1.5		4	8	F508	MO015AA
52	CD4034BF	8	1	PPS§	6.0Mt	MCX	500mØ	0.0	15	4.0	11	140n†	6.8m†	1.5		5	C	F508	MO015AA
53▼	CD4034BH	8	1	PPS§	6.0Mt	MCX	500m	0.0	15	4.0	11	140n†	6.8m†	1.5		5	C	F508	CH19
54	4034BDC	8	1	PPS	9.0MØt	MCX	9.0m♦	0.0	15	4.0	11	120n†	4.5m	1.5		4	8	F478	ML133g
55	4034BDM	8	1	PPS	9.0MØt	MCX	9.0m♦	0.0	15	4.0	11	120n†	4.5m	1.5		5	C	F478	ML133g
56	4034BFC	8	1	PPS	9.0MØt	MCX	9.0m♦	0.0	15	4.0	11	120n†	4.5m	1.5		4	8	F478	FL47
57	4034BFM	8	1	PPS	9.0MØt	MCX	9.0m♦	0.0	15	4.0	11	120n†	4.5m	1.5		5	C	F478	FL47
58	4034BPC	8	1	PPS	9.0MØt	MCX	9.0m♦	0.0	15	4.0	11	120n†	4.5m	1.5		4	8	F478	ML216
59	34014DC	8	1	PPS	14MΔ†	MCX	12m♦	0.0	10	3.0	7.0	47n†	1.2m	.50		4	8	F408	ML127s
60	34014DM	8	1	PPS	14MΔ†	MCX	6.0m♦	0.0	10	3.0	7.0	47n†	1.2m	.50		5	C	F408	ML127s
61	34014FC	8	1	PPS	14MΔ†	MCX	12m♦	0.0	10	3.0	7.0	47n†	1.2m	.50		4	8	F408	FL14g
62	34014FM	8	1	PPS	14MΔ†	MCX	6.0m♦	0.0	10	3.0	7.0	47n†	1.2m	.50		5	C	F408	FL14g
63	34014PC	8	1	PPS	14MΔ†	MCX	12m♦	0.0	10	3.0	7.0	47n†	1.2m	.50		4	8	F408	ML170
64	AM2502DC	8	1	PPS	15M*	BTX	475m♦	0.0	5.0	.80	2.0	38nØ	9.6m	.40		0	7	F257	ML127k
65	AM2502DM	8	1	PPS	15M*	BTX	425m♦	0.0	5.0	.80	2.0	38nØ	9.6m	.40		5	C	F257	ML62c
66	AM2502FM	8	1	PPS	15M*	BTX	425m♦	0.0	5.0	.80	2.0	38nØ	9.6m	.40		5	C	F257	FL33b
67	AM2502PC	8	1	PPS	15M*	BTX	475m♦	0.0	5.0	.80	2.0	38nØ	9.6m	.40		0	7	F257	ML89a
68	AM2503DC	8	1	PPS	15M*	BTX	450m♦	0.0	5.0	.80	2.0	38nØ	9.6m	.40		0	7	F257	ML127k
69	AM2503DM	8	1	PPS	15M*	BTX	400m♦	0.0	5.0	.80	2.0	38nØ	9.6m	.40		5	C	F257	ML62c
70	AM2503FM	8	1	PPS	15M*	BTX	400m♦	0.0	5.0	.80	2.0	38nØ	9.6m	.40		5	C	F257	FL33b
71	AM2503PC	8	1	PPS	15M*	BTX	450m♦	0.0	5.0	.80	2.0	38nØ	9.6m	.40		0	7	F257	ML89a
72▼	CD4014BH	8	1§	PPS	16MΔ	MCX	500m	0.0	15	4.0	11	80n†	6.8m†	1.5		5	C	F504	CH17
73#	uPB2091D	8	1	PPS	18M	BTX	175m	0.0	5.0	.80	2.0					2	7	F404	ML93f
74	54165DM	8	1	PPS	20MØ	BTX	315m	0.0	5.0	.80	2.0	40n	16m	.40		5	C	F107	ML127k
75	54165FM	8	1	PPS	20MØ	BTX	315m	0.0	5.0	.80	2.0	40n	16m	.40		5	C	F107	FL14g
76	74165DC	8	1	PPS	20MØ	BTX	315m	0.0	5.0	.80	2.0	40n	16m	.40		0	7	F107	ML127k
77	74165FC	8	1	PPS	20MØ	BTX	315m	0.0	5.0	.80	2.0	40n	16m	.40		0	7	F107	FL14g
78	74165PC	8	1	PPS	20MØ	BTX	315m	0.0	5.0	.80	2.0	40n	16m	.40		0	7	F107	ML170
79#	M53365P	8	1	PPS	20MØ	BTX	210m†	0.0	5.0	.80	2.0	40nØ	16m	.40		0	7	F107	ML5a
80	N74165B	8	1	PPS	20MØ	BTX	210m†	0.0	5.0	.80	2.0	40nØ	16m	.40		0	7	F107	ML132
81	N74165N	8	1	PPS	20MØ	BTX	315m	0.0	5.0	.80	2.0	24n	16m	.40		0	7	F107	MO001AE
82#	RC54165B	8	1	PPS	20MØ	BTX	210m†	0.0	5.0	.80	2.0	40nØ	16m	.40		5	C	F107	ML132
83#	RC54165F	8	1	PPS	20MØ	BTX	315m♦	0.0	5.0	.80	2.0	40nØ	16m	.40		5	C	F107	ML61d
84#	RC54165W	8	1	PPS	20MØ	BTX	315m♦	0.0	5.0	.80	2.0	40nØ	16m	.40		5	C	F107	FL25
85	S54165B	8	1	PPS	20MØ	BTX	210m†	0.0	5.0	.80	2.0	40nØ	16m	.40		5	C	F107	ML132
86	S54165F	8	1	PPS	20MØ	BTX	315m♦	0.0	5.0	.80	2.0	40nØ	16m	.40		5	C	F107	ML61d
87	S54165W	8	1	PPS	20MØ	BTX	315m♦	0.0	5.0	.80	2.0	40nØ	16m	.40		5	C	F107	FL25
88	74LS323FC	8	1	PPS	25MØ	BTD	300m	0.0	5.0	.80	2.0§	29n	4.0m	.40		0	7	F429	FLØ
89	54166DM	8	1	PPS	25MØ	BTX	635m	0.0	5.0	.80	2.0	35n	16m	.40		5	C	F88	ML127e
90	54166FM	8	1	PPS	25MØ	BTX	635m	0.0	5.0	.80	2.0	35n	16m	.40		5	C	F88	FL14g
91	54198DM	8	1	PPS	25MØ	BTX	520m	0.0	5.0	.80	2.0	35n	16m	.40		5	C	F89	ML133g
92	54198FM	8	1	PPS	25MØ	BTX	520m	0.0	5.0	.80	2.0	35n	16m	.40		5	C	F89	FL47
93	54199DM	8	1	PPS	25MØ	BTX	520m	0.0	5.0	.80	2.0	35n	16m	.40		5	C	F90	ML133g
94	54199FM	8	1	PPS	25MØ	BTX	520m	0.0	5.0	.80	2.0	35n	16m	.40		5	C	F90	FL47
95	74166DC	8	1	PPS	25MØ	BTX	635m	0.0	5.0	.80	2.0	35n	16m	.40		0	7	F88	ML127e
96	74166FC	8	1	PPS	25MØ	BTX	635m	0.0	5.0	.80	2.0	35n	16m	.40		0	7	F88	FL14g
97	74166PC	8	1	PPS	25MØ	BTX	635m	0.0	5.0	.80	2.0	35n	16m	.40		0	7	F88	ML170
98	74198DC	8	1	PPS	25MØ	BTX	580m	0.0	5.0	.80	2.0	35n	16m	.40		0	7	F89	ML133g
99	74198FC	8	1	PPS	25MØ	BTX	580m	0.0	5.0	.80	2.0	35n	16m	.40		0	7	F89	FL47
100	74198PC	8	1	PPS	25MØ	BTX	580m	0.0	5.0	.80	2.0	35n	16m	.40		0	7	F89	ML216
101	74199DC	8	1	PPS	25MØ	BTX	580m	0.0	5.0	.80	2.0	35n	16m	.40		0	7	F90	ML133g
102	74199FC	8	1	PPS	25MØ	BTX	580m	0.0	5.0	.80	2.0	35n	16m	.40		0	7	F90	FL47
103	74199PC	8	1	PPS	25MØ	BTX	580m	0.0	5.0	.80	2.0	35n	16m	.40		0	7	F90	ML216
104#	FLJ311-74198	8	1	PPS	25M	BTX	610m	0.0	5.0	.80	2.0	35n	16m	.40		0	7	F89	MLØ
105#	FLJ315-84198	8	1	PPS	25M	BTX	610m	0.0	5.0	.80	2.0	35n	16m	.40		2	8	F89	MLØ
106#	FLJ321-74199	8	1	PPS	25M	BTX	610m	0.0	5.0	.80	2.0	35n	16m	.40		0	7	F90	MLØ
107#	FLJ325-84199	8	1	PPS	25M	BTX	610m	0.0	5.0	.80	2.0	35n	16m	.40		2	8	F90	MLØ
108#	FLJ461-74166	8	1	PPS	25M	BTX	610m	0.0	5.0	.80	2.0	35n	16m	.40		0	7	F88	MLØ
109#	FLJ465-84166	8	1	PPS	25M	BTX	610m	0.0	5.0	.80	2.0	35n	16m	.40		2	8	F88	MLØ
110#	M53364P	8	1	PPS	25MØ	BTX	21m%†	0.0	5.0	.80	2.0	42n†	8.0m	.40		0	7	F179	TO116

SYMBOLS AND CODES EXPLAINED IN INTERPRETER

7. SHIFT REGISTERS

IN ORDER OF(1)No.BITS/REG(2)No.REGISTERS (3)OP.CODE(4)MAX W/C FREQ(5)STRUCT(6)TYPE No

LINE No.	6 TYPE No.	ORGANIZATION 1 BITS PER REGISTER	ORGANIZATION 2 No. REGS	3 OPER. CODE	4 MAX WORST CASE FREQ. (Hz)	5 STRUC TURE CODE	MAX OPER. POWER DISS. (W)	RATED POWER SUP. SPAN NEG. (V)	RATED POWER SUP. SPAN POS. (V)	INPUT LOGIC LEVELS MAX '0' (V)	INPUT LOGIC LEVELS MIN '1' (V)	MAX PROP. DELAY (s)	MIN OUTPUT SINK CURRENT (A)	MIN OUTPUT SINK CURRENT @ OUT (V)	MIN CLOCK FREQ. (Hz)	OPER. TEMP. RANGE CODE -	OPER. TEMP. RANGE CODE +	DRAWINGS LOGIC/ BLOCK	DRAWINGS OUTLINE
1#	M53398P	8	1	PPS	25MØ	BTX	360m†	0.0	5.0	.80	2.0	30nØ	16m	.40		0	7	F89	
2#	M53399P	8	1	PPS	25MØ	BTX	360m†	0.0	5.0	.80	2.0	30nØ	16m	.40		0	7	F90	
3	N74166B	8	1	PPS	25MØ	BTX	360m†	0.0	5.0	.80	2.0	35nØ	16m	.40		0	7	F88	ML132
4	N74198F	8	1	PPS	25MØ	BTX	580m♦	0.0	5.0	.80	2.0	35nØ	16m	.40		0	7	F89	ML133
5	N74198N	8	1	PPS	25MØ	BTX	580m♦	0.0	5.0	.80	2.0	35nØ	16m	.40		0	7	F89	ML135
6	N74199F	8	1	PPS	25MØ	BTX	580m♦	0.0	5.0	.80	2.0	35nØ	16m	.40		0	7	F90	ML133
7	N74199N	8	1	PPS	25MØ	BTX	580m♦	0.0	5.0	.80	2.0	35nØ	16m	.40		0	7	F90	ML135
8#	RC54166B	8	1	PPS	25MØ	BTX	360m†	0.0	5.0	.80	2.0	35nØ	16m	.40		5	C	F88	ML132
9#	RC54166F	8	1	PPS	25MØ	BTX	520m♦	0.0	5.0	.80	2.0	35nØ	16m	.40		5	C	F88	ML127m
10#	RC54166W	8	1	PPS	25MØ	BTX	520m♦	0.0	5.0	.80	2.0	35nØ	16m	.40		5	C	F88	FL25
11#	RC54198F	8	1	PPS	25MØ	BTX	520m♦	0.0	5.0	.80	2.0	35nØ	16m	.40		5	C	F89	ML133
12#	RC54198N	8	1	PPS	25MØ	BTX	520m♦	0.0	5.0	.80	2.0	35nØ	16m	.40		5	C	F89	ML135
13#	RC54198Q	8	1	PPS	25MØ	BTX	520m♦	0.0	5.0	.80	2.0	35nØ	16m	.40		5	C	F89	FL3b
14#	RC54199F	8	1	PPS	25MØ	BTX	520m♦	0.0	5.0	.80	2.0	35nØ	16m	.40		5	C	F90	ML133
15#	RC54199N	8	1	PPS	25MØ	BTX	520m♦	0.0	5.0	.80	2.0	35nØ	16m	.40		5	C	F90	ML135
16#	RC54199Q	8	1	PPS	25MØ	BTX	520m♦	0.0	5.0	.80	2.0	35nØ	16m	.40		5	C	F90	FL3b
17	S54166B	8	1	PPS	25MØ	BTX	360m†	0.0	5.0	.80	2.0	35nØ	16m	.40		5	C	F88	ML132
18	S54166F	8	1	PPS	25MØ	BTX	520m♦	0.0	5.0	.80	2.0	35nØ	16m	.40		5	C	F88	ML127m
19	S54166W	8	1	PPS	25MØ	BTX	520m♦	0.0	5.0	.80	2.0	35nØ	16m	.40		5	C	F88	FL25
20	S54198F	8	1	PPS	25MØ	BTX	520m♦	0.0	5.0	.80	2.0	35nØ	16m	.40		5	C	F89	ML133
21	S54198N	8	1	PPS	25MØ	BTX	520m♦	0.0	5.0	.80	2.0	35nØ	16m	.40		5	C	F89	ML135
22	S54198Q	8	1	PPS	25MØ	BTX	520m♦	0.0	5.0	.80	2.0	35nØ	16m	.40		5	C	F89	FL3b
23	S54198W	8	1	PPS	25MØ	BTX	520m	0.0	5.0	.80	2.0	26n	16m	.40		5	C	F89	FL3b
24	S54199F	8	1	PPS	25MØ	BTX	520m♦	0.0	5.0	.80	2.0	35nØ	16m	.40		5	C	F90	ML133
25	S54199N	8	1	PPS	25MØ	BTX	520m♦	0.0	5.0	.80	2.0	35nØ	16m	.40		5	C	F90	ML135
26	S54199Q	8	1	PPS	25MØ	BTX	520m♦	0.0	5.0	.80	2.0	35nØ	16m	.40		5	C	F90	FL3b
27#	S54199W	8	1	PPS	25MØ	BTX	728m	0.0	5.0	.80	2.0	35n	16m	.40		5	C	F90	FL3d
28	SN54198J	8	1	PPS	25MØ	BTX	360m†	0.0	5.0	.80	2.0	30nØ	16m	.40		5	C	F89	MO015AA
29	SN54198W	8	1	PPS	25MØ	BTX	360m†	0.0	5.0	.80	2.0	30nØ	16m	.40		5	C	F89	MO019AA
30	SN54199J	8	1	PPS	25MØ	BTX	360m†	0.0	5.0	.80	2.0	30nØ	16m	.40		5	C	F90	MO015AA
31	SN54199W	8	1	PPS	25MØ	BTX	360m†	0.0	5.0	.80	2.0	30nØ	16m	.40		5	C	F90	MO019AA
32	SN74198J	8	1	PPS	25MØ	BTX	360m†	0.0	5.0	.80	2.0	30nØ	16m	.40		0	7	F89	MO015AA
33	SN74198N	8	1	PPS	25MØ	BTX	360m†	0.0	5.0	.80	2.0	30nØ	16m	.40		0	7	F89	ML72
34	SN74199J	8	1	PPS	25MØ	BTX	360m†	0.0	5.0	.80	2.0	30nØ	16m	.40		0	7	F90	MO015AA
35	SN74199N	8	1	PPS	25MØ	BTX	360m†	0.0	5.0	.80	2.0	30nØ	16m	.40		0	7	F90	ML72
36#	ZN74166J	8	1	PPS	25MØ	BTX	360m†	0.0	5.0	.80	2.0	30nØ	16m	.40		0	7	PN16fh	ML85b
37	N74165F	8	1	PPS	26MØ	BTX	315m♦	0.0	5.0	.80	2.0	40nØ	16m	.40		0	7	F107	ML127m
38	74LS273PC	8	1	PPS	30MØ	BTD	140m	0.0	5.0	.80	2.0	22n	8.0m	.50		0	7	F449	ML326
39	74LS377PC	8	1	PPS	30MØ	BTD	140m	0.0	5.0	.80	2.0	27nØ	8.0m	.50		0	7	F432	ML326
40	AM25LS273DC	8	1	PPS	30MØ	BTD		0.0	5.0	.80	2.0	35nØ	8.0m	.45		0	7	F449	ML377
41	AM25LS273DM	8	1	PPS	30MØ	BTD		0.0	5.0	.70	2.0	35nØ	8.0m	.45		5	C	F449	ML377
42	AM25LS273FM	8	1	PPS	30MØ	BTD		0.0	5.0	.70	2.0	35nØ	8.0m	.45		5	C	F449	FL70
43	AM25LS273PC	8	1	PPS	30MØ	BTD		0.0	5.0	.80	2.0	35nØ	8.0m	.45		0	7	F449	ML161g
44	AM25LS374DC	8	1	PPS	30MØ	BTD		0.0	5.0	.80	2.0§	37nØ	8.0m	.45		0	7	F359	ML377
45	AM25LS374DM	8	1	PPS	30MØ	BTD		0.0	5.0	.70	2.0§	37nØ	8.0m	.45		5	C	F359	ML377
46	AM25LS374FM	8	1	PPS	30MØ	BTD		0.0	5.0	.70	2.0§	37nØ	8.0m	.45		5	C	F359	FL70
47	AM25LS374PC	8	1	PPS	30MØ	BTD		0.0	5.0	.80	2.0§	37nØ	8.0m	.45		0	7	F359	ML161g
48	AM25LS377BDC	8	1	PPS	30MØ	BTD	140m	0.0	5.0	.80	2.0	45n	8.0m	.45		0	7	F432a	ML377
49	AM25LS377BDM	8	1	PPS	30MØ	BTD	140m	0.0	5.0	.70	2.0	54n	8.0m	.45		5	C	F432a	ML377
50	AM25LS377BFM	8	1	PPS	30MØ	BTD	140m	0.0	5.0	.70	2.0	54n	8.0m	.45		5	C	F432a	FL70
51	AM25LS377BPC	8	1	PPS	30MØ	BTD	140m	0.0	5.0	.80	2.0	45n	8.0m	.45		0	7	F432a	ML161g
52	AM25LS377DC	8	1	PPS	30MØ	BTD		0.0	5.0	.80	2.0	35nØ	8.0m	.45		0	7	F432	ML377
53	AM25LS377DM	8	1	PPS	30MØ	BTD		0.0	5.0	.70	2.0	35nØ	8.0m	.45		5	C	F432	ML377
54	AM25LS377FM	8	1	PPS	30MØ	BTD		0.0	5.0	.70	2.0	35nØ	8.0m	.45		5	C	F432	FL70
55	AM25LS377PC	8	1	PPS	30MØ	BTD		0.0	5.0	.80	2.0	35nØ	8.0m	.45		0	7	F432	ML161g
56#	M74LS299P	8	1	PPS	30MØ	BTD	300m	0.0	5.0	0.8	2.0	35n	24m	0.5		0	7	F281	ML☑
57▼	N74LS273F	8	1	PPS	30MØ	BTD	135m	0.0	5.0	.80	2.0	21n	16m	.40		0	7	F449	ML285
58▼	N74LS273N	8	1	PPS	30MØ	BTD	135m	0.0	5.0	.80	2.0	21n	16m	.40		0	7	F449	ML286
59▼	N74LS377F	8	1	PPS	30MØ	BTD	140m	0.0	5.0	.80	2.0	21n	16m	.40		0	7	F432	ML285
60▼	N74LS377N	8	1	PPS	30MØ	BTD	140m	0.0	5.0	.80	2.0	21n	16m	.40		0	7	F432	ML286
61▼	S54LS273F	8	1	PPS	30MØ	BTD	135m	0.0	5.0	.80	2.0	21n	16m	.40		5	C	F449	ML285
62▼	S54LS377F	8	1	PPS	30MØ	BTD	140m	0.0	5.0	.80	2.0	21n	16m	.40		5	C	F432	ML285
63♦	SN54LS273J	8	1	PPS	30MØ	BTD	140m	0.0	5.0	.70	2.0	27nØ	4.0m	.40		5	C	F449	ML377
64♦	SN54LS273W	8	1	PPS	30MØ	BTD	140m	0.0	5.0	.80	2.0	28nØ	4.0m	.40		5	C	F449	FL64
65♦	SN54LS299J	8	1	PPS§	30MØ	BTD	300m	0.0	5.0	.70	2.0§	35n	12m	.40		5	C	F281	ML213
66♦	SN54LS377J	8	1	PPS	30MØ	BTD	140m	0.0	5.0	.70	2.0	27nØ	4.0m	.40		5	C	F450	ML213
67♦	SN54LS377W	8	1	PPS	30MØ	BTD	140m	0.0	5.0	.70	2.0	27nØ	4.0m	.40		5	C	F450	FL70
68♦	SN74LS273J	8	1	PPS	30MØ	BTD	140m	0.0	5.0	.80	2.0	27nØ	4.0m	.40		0	7	F449	ML213
69♦	SN74LS273N	8	1	PPS	30MØ	BTD	140m	0.0	5.0	.80	2.0	27nØ	4.0m	.40		0	7	F449	ML161
70♦	SN74LS273W	8	1	PPS	30MØ	BTD	140m	0.0	5.0	.80	2.0	28nØ	4.0m	.40		0	7	F449	FL64
71♦	SN74LS299J	8	1	PPS§	30MØ	BTD	300m	0.0	5.0	.80	2.0§	35n	24m	.50		0	7	F281	ML332
72♦	SN74LS299N	8	1	PPS§	30MØ	BTD	300m	0.0	5.0	.80	2.0§	35n	24m	.50		0	7	F281	ML275
73♦	SN74LS377J	8	1	PPS	30MØ	BTD	140m	0.0	5.0	.80	2.0	27nØ	4.0m	.40		0	7	F450	ML213
74♦	SN74LS377N	8	1	PPS	30MØ	BTD	140m	0.0	5.0	.80	2.0	27nØ	4.0m	.40		0	7	F450	ML161
75♦	SN74LS377W	8	1	PPS	30MØ	BTD	140m	0.0	5.0	.80	2.0	27nØ	4.0m	.40		0	7	F450	FL64
76	SN54273J	8	1	PPS	30MΔØ	BTX	470m	0.0	5.0	.80	2.0	27nØ	16m	.40		5	C	F449	ML213
77	SN74273J	8	1	PPS	30MΔØ	BTX	470m	0.0	5.0	.80	2.0	27nØ	16m	.40		0	7	F449	ML213
78	SN74273N	8	1	PPS	30MΔØ	BTX	470m	0.0	5.0	.80	2.0	27nØ	16m	.40		0	7	F449	ML161
79#	uPB2198D	8	1	PPS	30M	BTX	360m	0.0	5.0	.80	2.0					2	7	PN24gb	ML205
80	9LS164DC	8	1	PPS	35MΔ†	BTD	141m♦	0.0	5.0	.80	2.0	27n	4.0m	.40		0	7	F403	TO116
81	9LS164DM	8	1	PPS	35MΔ†	BTD	148m♦	0.0	5.0	.70	2.0	27n	4.0m	.40		5	C	F403	TO116
82	9LS164FC	8	1	PPS	35MΔ†	BTD	141m♦	0.0	5.0	.80	2.0	27n	4.0m	.40		0	7	F403	TO86
83	9LS164FM	8	1	PPS	35MΔ†	BTD	148m♦	0.0	5.0	.70	2.0	27n	4.0m	.40		5	C	F403	TO86
84	9LS164PC	8	1	PPS	35MΔ†	BTD	141m♦	0.0	5.0	.80	2.0	27n	4.0m	.40		0	7	F403	ML233
85	54LS299DM	8	1	PPS§§	35M*Ø	BTD	325m	0.0	5.0	.70	2.0§	33n	4.0m	.40		5	C	F427	ML376
86	54LS299FM	8	1	PPS§§	35M*Ø	BTD	325m	0.0	5.0	.70	2.0§	33n	4.0m	.40		5	C	F427	FL71
87	54LS322DM	8	1	PPS	35MØ	BTD	300m	0.0	5.0	.70	2.0§	33n	4.0m	.40		5	C	F428	ML☑
88	54LS322FM	8	1	PPS	35MØ	BTD	300m	0.0	5.0	.70	2.0§	33n	4.0m	.40		5	C	F428	FL☑
89	54LS323DM	8	1	PPS	35MØ	BTD	300m	0.0	5.0	.70	2.0§	29n	4.0m	.40		5	C	F429	ML☑
90	54LS323FM	8	1	PPS	35MØ	BTD	300m	0.0	5.0	.70	2.0§	29n	4.0m	.40		5	C	F429	FL☑
91	74LS299PC	8	1	PPS	35M	BTD	325m	0.0	5.0	.80	2.0§	33n	8.0m	.50		0	7	F427	ML326
92	74LS322DC	8	1	PPS	35MØ	BTD	300m	0.0	5.0	.80	2.0§	33n	4.0m	.40		0	7	F428	ML☑
93	74LS322FC	8	1	PPS	35MØ	BTD	300m	0.0	5.0	.80	2.0§	33n	4.0m	.40		0	7	F428	FL☑
94	74LS322PC	8	1	PPS	35MØ	BTD	300m	0.0	5.0	.80	2.0§	33n	4.0m	.40		0	7	F428	ML326
95	74LS323DC	8	1	PPS	35MØ	BTD	300m	0.0	5.0	.80	2.0§	29n	4.0m	.40		0	7	F429	ML☑
96	74LS323PC	8	1	PPS	35MØ	BTD	300m	0.0	5.0	.80	2.0§	29n	4.0m	.40		0	7	F429	ML326
97	74LS374PC	8	1	PPS	35MØ	BTD	225m	0.0	5.0	.80	2.0§	34n	24m	.50		0	7	F430	ML326
98	74LS574PC	8	1	PPS	35MØ	BTD		0.0	5.0	.80	2.0§		24m	.50		0	7	F430a	ML326
99#	M74LS164P	8	1	PPS	35M†Δ	BTD	141m	0.0	5.0	0.8	2.0	27n	4.0m	0.4		0	7	F403	ML409
100#	M74LS323P	8	1	PPS	35MØ	BTD	300m	0.0	5.0	0.8	2.0	39n	24m	0.5		0	7	F429	ML409
101	N74LS299F	8	1	PPS	35MØ	BTD	300m	0.0	5.0	.80	2.0	39n	24m	.50		0	7	F427	ML285
102	N74LS299N	8	1	PPS	35MØ	BTD	300m	0.0	5.0	.80	2.0	39n	24m	.50		0	7	F427	ML286
103	N74LS323F	8	1	PPS	35MØ	BTD	300m	0.0	5.0	.80	2.0	39n	24m	.50		0	7	F429	ML285
104	N74LS323N	8	1	PPS	35MØ	BTD	300m	0.0	5.0	.80	2.0	39n	24m	.50		0	7	F429	ML286
105▼	N74LS364F	8	1	PPS	35MØ	BTD	350m	0.0	5.0	.80	2.0§	28n	21m	.50		0	7	F430	ML285
106▼	N74LS374F	8	1	PPS	35MØ	BTD	225m	0.0	5.0	.80	2.0§	28n	24m	.50		0	7	F430	ML285
107▼	N74LS374N	8	1	PPS	35MØ	BTD	225m	0.0	5.0	.80	2.0§	28n	24m	.50		0	7	F430	ML286
108	S54LS299F	8	1	PPS	35MØ	BTD	300m	0.0	5.0	.80	2.0	39n	12m	.40		5	C	F427	ML285
109	S54LS323F	8	1	PPS	35MØ	BTD	300m	0.0	5.0	.80	2.0	39n	12m	.40		5	C	F429	ML285
110▼	S54LS364F	8	1	PPS	35MØ	BTD	350m	0.0	5.0	.80	2.0§	28n	12m	.40		5	C	F430	ML285

SYMBOLS AND CODES EXPLAINED IN INTERPRETER

7. SHIFT REGISTERS

IN ORDER OF(1)No.BITS/REG(2)No.REGISTERS
(3)OP.CODE(4)MAX W/C FREQ(5)STRUCT(6)TYPE No

LINE No.	6 TYPE No.	ORGANIZATION 1 BITS PER REGISTER	ORGANIZATION 2 No. REGS	3 OPER. CODE	4 MAX WORST CASE FREQ. (Hz)	5 STRUC TURE CODE	MAX OPER. POWER DISS. (W)	RATED POWER SUP. SPAN NEG. (V)	RATED POWER SUP. SPAN POS. (V)	INPUT LOGIC LEVELS MAX '0' (V)	INPUT LOGIC LEVELS MIN '1' (V)	MAX PROP. DELAY (s)	MIN OUTPUT SINK CURRENT (A)	MIN OUTPUT SINK CURRENT @ OUT (V)	MIN CLOCK FREQ. (Hz)	OPER. TEMP. RANGE CODE -	OPER. TEMP. RANGE CODE +	DRAWINGS LOGIC/ BLOCK	DRAWINGS OUTLINE
1▼	S54LS374F	8	1	PPS	35MØ	BTD	245m	0.0	5.0	.80	2.0§	28n	12m	.40		5	C	F430	ML285
2♦	SN54LS322J	8	1	PPS	35MØ	BTD		0.0	5.0	.70	2.0§		4.0m	.40		5	C	F428	ML332
3♦	SN54LS322W	8	1	PPS	35MØ	BTD		0.0	5.0	.70	2.0§		4.0m	.40		5	C	F428	FL64
4♦	SN54LS323J	8	1	PPS	35MØ	BTD	300m	0.0	5.0	.70	2.0§	35n	12m	.40		5	C	F281	ML332
5♦	SN54LS323W	8	1	PPS	35MØ	BTD		0.0	5.0	.70	2.0§		4.0m	.40		5	C	F429	FL70
6♦	SN74LS373J	8	1	PPS	35MØ	BTD	200m	0.0	5.0	.70	2.0§	36nØ	12m	.40		5	C	F553	ML213
7♦	SN54LS374J	8	1	PPS	35MØ	BTD	225m	0.0	5.0	.70	2.0§	34nØ	12m	.40		5	C	F359	ML332
8♦	SN54LS374W	8	1	PPS	35MØ	BTD		0.0	5.0	.70	2.0§	34nØ	4.0m	.40		5	C	F430	FL64
9♦	SN54LS574J	8	1	PPS	35MØ	BTD	225m	0.0	5.0	.70	2.0§		12m	.40		5	C	F430a	ML332
10♦	SN54LS574W	8	1	PPS	35MØ	BTD	225m	0.0	5.0	.70	2.0§		12m	.40		5	C	F430a	FL64
11♦	SN74LS299W	8	1	PPS§	35MØ	BTD	300m	0.0	5.0	.80	2.0	35nØ	24m	.50		0	7	F281	FL64
12♦	SN74LS322J	8	1	PPS	35MØ	BTD		0.0	5.0	.80	2.0§		4.0m	.40		0	7	F428	ML332
13♦	SN74LS322N	8	1	PPS	35MØ	BTD		0.0	5.0	.80	2.0§		4.0m	.40		0	7	F428	ML275
14♦	SN74LS322W	8	1	PPS	35MØ	BTD		0.0	5.0	.80	2.0§					0	7	F428	FL64
15♦	SN74LS323J	8	1	PPS	35MØ	BTD	300m	0.0	5.0	.80	2.0§	35n	24m	.50		0	7	F281	ML332
16♦	SN74LS323N	8	1	PPS	35MØ	BTD	300m	0.0	5.0	.80	2.0§	35n	24m	.50		0	7	F281	ML161g
17♦	SN74LS323W	8	1	PPS	35MØ	BTD		0.0	5.0	.80	2.0§	25nØ				0	7	F429	FL64
18	SN74LS373J	8	1	PPS	35MØ	BTD	200m	0.0	5.0	.80	2.0§	36nØ	12m	.40		0	7	F554	ML213a
19♦	SN74LS373N	8	1	PPS	35MØ	BTD	200m	0.0	5.0	.80	2.0§	36nØ	12m	.40		0	7	F554	ML161
20♦	SN74LS374J	8	1	PPS	35MØ	BTD	225m	0.0	5.0	.80	2.0§	34nØ	24m	.50		0	7	F359	ML332
21♦	SN74LS374N	8	1	PPS	35MØ	BTD	225m	0.0	5.0	.80	2.0§	34nØ	24m	.50		0	7	F359	ML161g
22♦	SN74LS374W	8	1	PPS	35MØ	BTD	225m	0.0	5.0	.80	2.0§	34nØ	24m	.50		0	7	F359	FL64
23♦	SN74LS574J	8	1	PPS	35MØ	BTD	225m	0.0	5.0	.80	2.0§		24m	.50		0	7	F430a	ML332
24♦	SN74LS574N	8	1	PPS	35MØ	BTD	225m	0.0	5.0	.80	2.0§		24m	.50		0	7	F430a	ML333
25♦	SN74LS574W	8	1	PPS	35MØ	BTD	225m	0.0	5.0	.80	2.0§		24m	.50		0	7	F430a	FL64
26#	uPB74198C	8	1	PPS	35MΔØ	BTX	360m†	0.0	5.0	.80	2.0		16m	.40		0	7	F89	ML133d
27	74LS299DC	8	1	PPS	35M*Ø	PPS	325m	0.0	5.0	.80	2.0§	33n	8.0m	.50		0	7	F427	ML376
28	74LS299FC	8	1	PPS	35M*Ø	PPS	325m	0.0	5.0	.80	2.0§	33n	8.0m	.50		0	7	F427	FL71
29	AM25LS2520DC	8	1	PPS	40MtØ	BTD	185m	0.0	5.0	.80	2.0§	24n†	8.0m	.45		0	7	F557	ML162d
30	AM25LS2520DM	8	1	PPS	40MtØ	BTD	185m	0.0	5.0	.70	2.0§	24n†	8.0m	.45		5	C	F557	ML162d
31	AM25LS2520PC	8	1	PPS	40MtØ	BTD	185m	0.0	5.0	.70	2.0§	24n†	8.0m	.45		0	7	F557	ML197c
32	SN54S299J	8	1	PPS§	50M	BTD	1.2	0.0	5.0	.80	2.0§	24n	20m	.50		5	C	F281	ML213
33	SN74S299J	8	1	PPS§	50M	BTD	1.2	0.0	5.0	.80	2.0§	24n	20m	.50		0	7	F281	ML213
34	SN74S299N	8	1	PPS§	50M	BTD	1.2	0.0	5.0	.80	2.0§	24n	20m	.50		0	7	F281	ML161
35▼	N74S273F	8	1	PPS	75MØ	BTD	750m	0.0	5.0	.80	2.0	15n	16m	.40		0	7	F449	ML285
36▼	N74S273N	8	1	PPS	75MØ	BTD	750m	0.0	5.0	.80	2.0	15n	16m	.40		0	7	F449	ML286
37♦	SN54S373J	8	1	PPS	75MØΔ	BTD	800m	0.0	5.0	.80	2.0§	18nΔ	20m	.50		5	C	F554	ML213
38	SN54S374J	8	1	PPS	75MΔØ	BTD	700m	0.0	5.0	.80	2.0§	18nΔ	20m	.50		5	C	F359	ML213
39	SN74S373J	8	1	PPS	75MØ	BTD	800m	0.0	5.0	.80	2.0§	18nΔ	20m	.50		0	7	F554	ML213a
40	SN74S373N	8	1	PPS	75MØ	BTD	800m	0.0	5.0	.80	2.0§	18nΔ	20m	.50		0	7	F554	ML161f
41	SN74S374J	8	1	PPS	75MΔØ	BTD	700m	0.0	5.0	.80	2.0§	18nΔ	20m	.50		0	7	F359	ML213
42	SN74S374N	8	1	PPS	75MΔØ	BTD	700m	0.0	5.0	.80	2.0§	18nΔ	20m	.50		0	7	F359	ML161
43▼	SN54S374J#	8	1	PPS	75MØΔ	BTX	700m	0.0	5.0	.80	2.0§	18nΔ	20m	.50		5	C	F450	ML230
44	F100141DC	8	1	PPS	380MØ	BEX	1.0	4.5	0.0	-1.4	-1.1	2.2n				0	8	PN24gd	ML133h
45	F100141FC	8	1	PPS	380MØ	BEX	1.0	4.5	0.0	-1.4	-1.1	2.2n				0	8	PN24ge	FL48
46#	HEF4014B	8	1§	PSS		MCX	400mØ	0.0	10	3.0	7.0		2.0m	.50		4	8	F433	MLØ
47#	HEF4021B	8	1§	PSS		MCX	400mØ	0.0	10	3.0	7.0		2.0m	.50		4	8	F435	MLØ
48#	HCC4021BD	8	1§	PSS	16mΔ†	MCX	500mØ	0.0	15	4.0	11	80n†	6.8m†	1.5		5	C	F506	MO001AE
49#	HCC4021BF	8	1§	PSS	16mΔ†	MCX	500mØ	0.0	15	4.0	11	80n†	6.8m†	1.5		5	C	F506	MO001AC
50#	HCC4021BK	8	1§	PSS	16mΔ†	MCX	500mØ	0.0	15	4.0	11	80n†	6.8m†	1.5		5	C	F506	MO004AC
51#	HCF4021BE	8	1§	PSS	16mΔ†	MCX	500mØ	0.0	15	4.0	11	80n†	6.8m†	1.5		4	8	F506	MO001AC
52#	HCF4021BF	8	1§	PSS	16mΔ†	MCX	500mØ	0.0	15	4.0	11	80n†	6.8m†	1.5		4	8	F506	MO001AC
53	JANM38510/05702BEB	8	1§	PSS	700k	MCX	200mØ	0.0	5.0	.85	3.95	1.4u	85u%	.50		5	C	F252	ML220
54	JANM38510/05702BFA	8	1§	PSS	700k	MCX	200mØ	0.0	5.0	.85	3.95	1.4u	85u%	.50		5	C	F252	FL31
55	JANM38510/05702CEB	8	1§	PSS	700k	MCX	200mØ	0.0	5.0	.85	3.95	1.4u	85u%	.50		5	C	F252	ML220
56	JANM38510/05702CFA	8	1§	PSS	700k	MCX	200mØ	0.0	5.0	.85	3.95	1.4u	85u%	.50		5	C	F252	FL31
57	JANM38510/05704BEA	8	1	PSS	700k	MCX	200mØ	0.0	5.0	1.25	3.25	1.4u	85u%	.50		5	C	F463	ML220
58	JANM38510/05704BEB	8	1	PSS	700k	MCX	200mØ	0.0	5.0	1.25	3.25	1.4u	85u%	.50		5	C	F463	ML220
59	JANM38510/05704BEC	8	1	PSS	700k	MCX	200mØ	0.0	5.0	1.25	3.25	1.4u	85u%	.50		5	C	F463	ML220
60	JANM38510/05704BFA	8	1	PSS	700k	MCX	200mØ	0.0	5.0	1.25	3.25	1.4u	85u%	.50		5	C	F463	FL31
61	JANM38510/05704CEA	8	1	PSS	700k	MCX	200mØ	0.0	5.0	1.25	3.25	1.4u	85u%	.50		5	C	F463	ML220
62	JANM38510/05704CEB	8	1	PSS	700k	MCX	200mØ	0.0	5.0	1.25	3.25	1.4u	85u%	.50		5	C	F463	ML220
63	JANM38510/05704CEC	8	1	PSS	700k	MCX	200mØ	0.0	5.0	1.25	3.25	1.4u	85u%	.50		5	C	F463	ML220
64	JANM38510/05704CFA	8	1	PSS	700k	MCX	200mØ	0.0	5.0	1.25	3.25	1.4u	85u%	.50		5	C	F463	FL31
65	CM4014AE	8§	1	PSS	1.0M	MCX	200mØ	0.0	5.0	.01%Ø	4.99	1.0uØ				4	8	F79	ML4g
66	TP4014AJ	8	1	PSS	1.3MΔ	MCX	14m♦	0.0	10	.05%	9.95	400n	140u	9.5		4	8	F354	ML61a
67	TP4014AN	8	1	PSS	1.3MΔ	MCX	14m♦	0.0	10	.05%	9.95	400n	140u	9.5		4	8	F354	ML48
68	TP4021AJ	8	1	PSS	1.3MΔ	MCX	14m♦	0.0	10	.05%	9.95	400n	140u	9.5		4	8	F354	ML61a
69	TP4021AN	8	1	PSS	1.3MΔ	MCX	14m♦	0.0	10	.05%	9.95	400n	140u	9.5		4	8	F354	ML48
70	TF4014AJ	8	1	PSS	1.8MΔ	MCX	6.0m♦	0.0	10	.05%	9.95	300n	140u	9.5		5	C	F354	ML61a
71	TF4014AN	8	1	PSS	1.8MΔ	MCX	6.0m♦	0.0	10	.05%	9.95	300n	140u	9.5		5	C	F354	ML48
72	TF4021AJ	8	1	PSS	1.8MΔ	MCX	6.0m♦	0.0	10	.05%	9.95	300n	140u	9.5		5	C	F354	ML61a
73	TF4021AN	8	1	PSS	1.8MΔ	MCX	6.0m♦	0.0	10	.05%	9.95	300n	140u	9.5		5	C	F354	ML48
74	CD4014AE	8	1	PSS	2.5MØ	MCX	14m♦	0.0	10	.05%	9.95	300nØ	80u%	9.5		4	8	F79	MO001AC
75	CD4014AY	8	1	PSS	2.5MØ	MCX	14m♦	0.0	10	.05%	9.95	300nØ	80u	9.5		4	8	F79	MO001AC
76	CD4021AE	8	1	PSS	2.5MØ	MCX	1.4m♦	0.0	10	.05%	9.95	300nØ	80u%	9.5		4	8	F149	MO001AC
77	CD4021AY	8	1	PSS	2.5MØ	MCX	14m♦	0.0	10	.05%	9.95	300nØ	80u	9.5		4	8	F149	MO001AC
78#	HBF4014AE	8	1	PSS	2.5MØ	MCX	14m♦	0.0	10	.05%	9.9	300nØ	80u%	9.5		4	8	F79	MO001AC
79#	HBF4014AF	8	1	PSS	2.5MØ	MCX	14m♦	0.0	10	.05%	9.9	300nØ	80u%	9.5		4	8	F79	ML127c
80#	HBF4021AE	8	1	PSS	2.5MØ	MCX	14m♦	0.0	10	.05%	9.9	300nØ	80u%	9.5		4	8	F149	MO001AC
81#	HBF4021AF	8	1	PSS	2.5MØ	MCX	14m♦	0.0	10	.05%	9.9	300nØ	80u%	9.5		4	8	F149	ML127c
82	SCL4014BF	8	1	PSS	3.0MØ	MCA	300u♦	0.0	10	.05%	9.95	300nØ	900u	.50		5	C	PN16dj	MO004AH
83	CD4014AD	8	1	PSS	3.0MØ	MCX	6.0m♦	0.0	10	.05%	9.95	225nØ	140u%	9.5		5	C	F79	MO001AE
84	CD4014AF	8	1	PSS	3.0MØ	MCX	6.0m♦	0.0	10	.05%	9.95	225nØ	140u%	9.5		5	C	F79	MO001AC
85	CD4014AH	8	1	PSS	3.0MØ	MCX	6.0m♦	0.0	10	.05%	9.95	225nØ	140u	9.5		5	C	F79	CH2
86	CD4014AK	8	1	PSS	3.0MØ	MCX	6.0m♦	0.0	10	.05%	9.95	225nØ	140u%	9.5		5	C	F79	MO004AC
87	CD4021AD	8	1	PSS	3.0MØ	MCX	6.0m♦	0.0	10	.05%	9.95	225nØ	140u%	9.5		5	C	F149	MO001AE
88	CD4021AF	8	1	PSS	3.0MØ	MCX	600u♦	0.0	10	.05%	9.95	225nØ	140u%	9.5		5	C	F149	MO001AC
89	CD4021AH	8	1	PSS	3.0MØ	MCX	6.0m♦	0.0	10	.05%	9.95	225nØ	140u	9.5		5	C	F149	CH2
90	CD4021AK	8	1	PSS	3.0MØ	MCX	6.0m♦	0.0	10	.05%	9.95	225nØ	140u%	9.5		5	C	F149	MO001AC
91	CM4014AF	8	1	PSS	3.0MØ	MCX	6.0m♦	0.0	10	.05%	9.95	225nØ	140u%	9.5		5	C	F79	ML19a
92	CM4021AF	8	1	PSS	3.0MØ	MCX	6.0m♦	0.0	10	.05%	9.95	225nØ	140u%	9.5		5	C	F149	ML19a
93#	HBC4014AD	8	1	PSS	3.0MØ	MCX	6.0m♦	0.0	10	.05%	9.9	225nØ	140u%	9.5		5	C	F79	ML127c
94#	HBC4014AF	8	1	PSS	3.0MØ	MCX	6.0m♦	0.0	10	.05%	9.9	225nØ	140u%	9.5		5	C	F79	ML127c
95#	HBC4014AK	8	1	PSS	3.0MØ	MCX	6.0m♦	0.0	10	.05%	9.9	225nØ	140u%	9.5		5	C	F79	MO004AC
96#	HBC4021AD	8	1	PSS	3.0MØ	MCX	6.0m♦	0.0	10	.05%	9.9	225nØ	140u%	9.5		5	C	F149	ML127c
97#	HBC4021AF	8	1	PSS	3.0MØ	MCX	6.0m♦	0.0	10	.05%	9.9	225nØ	140u%	9.5		5	C	F149	ML127c
98#	HBC4021AK	8	1	PSS	3.0MØ	MCX	6.0m♦	0.0	10	.05%	9.9	225nØ	140u%	9.5		5	C	F149	MO004AC

SYMBOLS AND CODES
EXPLAINED IN INTERPRETER

7. SHIFT REGISTERS

IN ORDER OF(1)No.BITS/REG(2)No.REGISTERS
(3)OP.CODE(4)MAX W/C FREQ(5)STRUCT(6)TYPE No

LINE No.	6 TYPE No.	ORGANIZATION 1 BITS PER REGISTER	ORGANIZATION 2 No. REGS	3 OPER. CODE	4 MAX WORST CASE FREQ. (Hz)	5 STRUC TURE CODE	MAX OPER. POWER DISS. (W)	RATED POWER SUP. SPAN NEG. (V)	RATED POWER SUP. SPAN POS. (V)	INPUT LOGIC LEVELS MAX '0' (V)	INPUT LOGIC LEVELS MIN '1' (V)	MAX PROP. DELAY (s)	MIN OUTPUT SINK CURRENT (A)	MIN OUTPUT SINK CURRENT @ OUT (V)	MIN CLOCK FREQ. (Hz)	OPER. TEMP. RANGE CODE -	OPER. TEMP. RANGE CODE +	DRAWINGS LOGIC/ BLOCK	DRAWINGS OUTLINE
1#	HBC4034AD	8	1	PSS	3.0MØ	MCX	6.0m♦	0.0	10	.05%	9.9	480nØ	88u	9.5		5	C	F177	MO015AC
2#	HBC4034AK	8	1	PSS	3.0MØ	MCX	6.0m♦	0.0	10	.05%	9.9	480nØ	88u	9.5		5	C	F177	MO015AC
3	SCL4014BC	8	1	PSS	4.0MØ	MCA	300u♦	0.0	15	4.0	11	240nØ	3.4mØ	1.5		5	C	F541	ML127t
4	SCL4014BD	8	1	PSS	4.0MØ	MCA	300u♦	0.0	15	4.0	11	240nØ	3.4mØ	1.5		5	C	F541	MO001AE
5	SCL4014BE	8	1	PSS	4.0MØ	MCA	300u♦	0.0	15	4.0	11	240nØ	3.0mØ	1.5		4	8	F541	ML127u
6▼	SCL4014BHN	8	1	PSS	4.0MØ	MCA	300u♦	0.0	15	4.0	11	240nØ	3.4mØ	1.5		5	C	F541	CHØ
7	MC14014BAL	8	1$	PSS	4.0MØ	MCX	300u♦Ø	0.0	15	4.0	11	230nØ	3.4m	1.5		5	C	F274	ML5
8	MC14014BCL	8	1$	PSS	4.0MØ	MCX	1.2m♦Ø	0.0	15	4.0	11	230nØ	3.0m	1.5		4	8	F274	ML5
9	MC14014BCP	8	1$	PSS	4.0MØ	MCX	1.2m♦Ø	0.0	15	4.0	11	230nØ	3.0m	1.5		4	8	F274	ML145
10	MC14021BAL	8	1$	PSS	4.0MØ	MCX	300u♦Ø	0.0	15	4.0	11	230nØ	3.4m	1.5		5	C	F274	ML5
11	MC14021BCL	8	1$	PSS	4.0MØ	MCX	1.2m♦Ø	0.0	15	4.0	11	230nØ	3.0m	1.5		4	8	F274	ML5
12	MC14021BCP	8	1$	PSS	4.0MØ	MCX	1.2m♦Ø	0.0	15	4.0	11	230nØ	3.0m	1.5		4	8	F274	ML145
13	SCL4021AD	8	1	PSS	5.0Mt∅	MCX	6.0m♦	0.0	10	.05%	9.95	225n	140u%	9.5		5	C	PN16dj	ML62a
14	SCL4021BC	8	1	PSS	6.0MØ	MCA	300u♦	0.0	15	4.0	11	160nØ	3.4mØ	1.5		5	C	F542	ML127t
15	SCL4021BD	8	1	PSS	6.0MØ	MCA	300u♦	0.0	15	4.0	11	160nØ	3.4mØ	1.5		5	C	F542	MO001AE
16	SCL4021BE	8	1	PSS	6.0MØ	MCA	300u♦	0.0	15	4.0	11	160nØ	3.0mØ	1.5		4	8	F542	ML127u
17	SCL4021BF	8	1	PSS	6.0MØ	MCA	300u♦	0.0	15	4.0	11	160nØ	3.4mØ	1.5		5	C	F542	MO004AH
18▼	SCL4021BHN	8	1	PSS	6.0MØ	MCA	300u♦	0.0	15	4.0	11	160nØ	3.4mØ	1.5		5	C	F542	CHØ
19	4014BDC	8	1$	PSS	6.0MØ	MCX	9.0m♦	0.0	15	4.0	11	96n	4.5m	1.5		4	8	F408	ML157e
20	4014BDM	8	1$	PSS	6.0MØ	MCX	9.0m♦	0.0	15	4.0	11	96n	4.5m	1.5		5	C	F408	ML157e
21	4014BFC	8	1$	PSS	6.0MØ	MCX	9.0m♦	0.0	15	4.0	11	96n	4.5m	1.5		4	8	F408	FL14j
22	4014BFM	8	1$	PSS	6.0MØ	MCX	9.0m♦	0.0	15	4.0	11	96n	4.5m	1.5		5	C	F408	FL14j
23	4014BPC	8	1$	PSS	6.0MØ	MCX	9.0m♦	0.0	15	4.0	11	96n	4.5m	1.5		4	8	F408	ML170
24	JANM38510/00904BEA	8	1	PSS	14M	BTX	372mØ	0.0	5.0	.80	2.0	60n	16m	.40		5	C	PN16dj	ML142
25	JANM38510/00904BEB	8	1	PSS	14M	BTX	372mØ	0.0	5.0	.80	2.0	60n	16m	.40		5	C	PN16dj	ML142
26	JANM38510/00904BFA	8	1	PSS	14M	BTX	372mØ	0.0	5.0	.80	2.0	60n	16m	.40		5	C	PN16dj	FL31
27	JANM38510/00904BFB	8	1	PSS	14M	BTX	372mØ	0.0	5.0	.80	2.0	60n	16m	.40		5	C	PN16dj	FL31
28	JANM38510/00904CEA	8	1	PSS	14M	BTX	372mØ	0.0	5.0	.80	2.0	60n	16m	.40		5	C	PN16dj	FL31
29	JANM38510/00904CEB	8	1	PSS	14M	BTX	372mØ	0.0	5.0	.80	2.0	60n	16m	.40		5	C	PN16dj	ML142
30	JANM38510/00904CFA	8	1	PSS	14M	BTX	372mØ	0.0	5.0	.80	2.0	60n	16m	.40		5	C	PN16dj	ML142
31	JANM38510/00904CFB	8	1	PSS	14M	BTX	372mØ	0.0	5.0	.80	2.0	60n	16m	.40		5	C	PN16dj	FL31
32#	HEF4014P	8	1$	PSS	14M	MCX	400mØ	0.0	10	3.0	7.0	165nt	1.2m	.50		4	8	F433	ML48e
33	CD4014BD	8	1$	PSS	16MΔt	MCX	500mØ	0.0	15	4.0	11	80nt	6.8mt	1.5		5	C	F504	MO001AE
34	CD4014BE	8	1$	PSS	16MΔt	MCX	500mØ	0.0	15	4.0	11	80nt	6.8mt	1.5		4	8	F504	MO001AC
35	CD4014BF	8	1$	PSS	16MΔt	MCX	500mØ	0.0	15	4.0	11	80nt	6.8mt	1.5		5	C	F504	MO001AC
36	CD4021BD	8	1$	PSS	16MΔt	MCX	500mØ	0.0	15	4.0	11	80nt	6.8mt	1.5		5	C	F506	MO001AE
37	CD4021BE	8	1$	PSS	16MΔt	MCX	500mØ	0.0	15	4.0	11	80nt	6.8mt	1.5		4	8	F506	MO001AC
38	CD4021BF	8	1$	PSS	16MΔt	MCX	500mØ	0.0	15	4.0	11	80nt	6.8mt	1.5		5	C	F506	MO001AC
39▼	CD4021BH	8	1$	PSS	16Mt△	MCX	500mØ	0.0	15	4.0	11	80nt	6.8mt	1.5		5	C	F506	
40#	HCC4014BD	8	1$	PSS	16MΔt	MCX	500mØ	0.0	15	4.0	11	80nt	6.8mt	1.5		5	C	F504	MO001AE
41#	HCC4014BF	8	1$	PSS	16MΔt	MCX	500mØ	0.0	15	4.0	11	80nt	6.8mt	1.5		5	C	F504	MO001AE
42#	HCC4014BK	8	1$	PSS	16MΔt	MCX	500mØ	0.0	15	4.0	11	80nt	6.8mt	1.5		5	C	F504	MO004AC
43#	HCF4014BE	8	1$	PSS	16MΔt	MCX	500mØ	0.0	15	4.0	11	80nt	6.8mt	1.5		4	8	F504	MO001AC
44#	HCF4014BF	8	1$	PSS	16MΔt	MCX	500mØ	0.0	15	4.0	11	80nt	6.8mt	1.5		4	8	F504	MO001AE
45#	HEF4014BD	8	1	PSS	16M*	MCX	400mØ	0.0	15	4.0	11	90n	3.0m	1.5		4	8	F491	ML127x
46#	HEF4014BP	8	1	PSS	16M*	MCX	400mØ	0.0	15	4.0	11	90n	3.0m	1.5		4	8	F491	ML89j
47▼#	HEF4014BT	8	1	PSS	16M*	MCX	400mØ	0.0	15	4.0	11	90n	3.0	1.5		4	8	F491	FL83
48	34021DC	8	1	PSS	18Mt∅	MCX	12m♦	0.0	10	3.0	7.0	51nt	1.2m	.50		4	8	F409	ML127s
49	34021DM	8	1	PSS	18Mt∅	MCX	6.0m♦	0.0	10	3.0	7.0	51nt	1.2m	.50		5	C	F409	ML127s
50	34021FC	8	1	PSS	18Mt∅	MCX	12m♦	0.0	10	3.0	7.0	51nt	1.2m	.50		4	8	F409	FL14g
51	34021FM	8	1	PSS	18Mt∅	MCX	6.0m♦	0.0	10	3.0	7.0	51nt	1.2m	.50		5	C	F409	FL14g
52	34021PC	8	1	PSS	18Mt∅	MCX	12m♦	0.0	10	3.0	7.0	51nt	1.2m	.50		4	8	F409	ML170
53#	HEF4021BD	8	1	PSS	18M*	MCX	400mØ	0.0	15	4.0	11	125n	3.0m	1.5		4	8	F493	ML127x
54#	HEF4021BP	8	1	PSS	18M*	MCX	400mØ	0.0	15	4.0	11	125n	3.0m	1.5		4	8	F493	ML89j
55▼#	HEF4021BT	8	1	PSS	18M*	MCX	400mØ	0.0	15	4.0	11	125n	3.0	1.5		4	8	F493	FL83
56#	HEF4021P	8	1$	PSS	18M	MCX	400mØ	0.0	10	3.0	7.0	172nt	1.2m	.50		4	8	F435	ML48e
57	MC54165F	8	1	PSS	20M	BTX	315m♦	0.0	5.0	.40%	2.4	40n	16m	.40		5	C	F261	FL34
58	MC54165L	8	1	PSS	20M	BTX	315m♦	0.0	5.0	.40%	2.4	40n	16m	.40		5	C	F261	ML127b
59	MC74165L	8	1	PSS	20M	BTX	315m♦	0.0	5.0	.40%	2.4	40n	16m	.40		0	7	F261	ML127b
60	SN54165J	8	1	PSS	20MØ	BTX	315m	0.0	5.0	.80	2.0	40nØ	16m	.40		5	C	F107	ML61a
61	SN54165W	8	1	PSS	20MØ	BTX	315m	0.0	5.0	.80	2.0	40nØ	16m	.40		5	C	F107	MO004AC
62	SN74165J	8	1	PSS	20MØ	BTX	315m	0.0	5.0	.80	2.0	40nØ	16m	.40		0	7	F107	ML61a
63	SN74165N	8	1	PSS	20MØ	BTX	315m	0.0	5.0	.80	2.0	40nØ	16m	.40		0	7	F107	ML48
64#	ZN54165E	8	1	PSS	20MØ	BTX	315mt	0.0	5.0	.80	2.0	40nØ	16m	.40		5	C	PN16dj	ML5f
65#	ZN54165J	8	1	PSS	20MØ	BTX	315mt	0.0	5.0	.80	2.0	40nØ	16m	.40		5	C	PN16dj	ML85b
66#	ZN74165E	8	1	PSS	20MØ	BTX	315mt	0.0	5.0	.80	2.0	40nØ	16m	.40		0	7	PN16dj	ML5f
67#	ZN74165J	8	1	PSS	20MØ	BTX	315mt	0.0	5.0	.80	2.0	40nØ	16m	.40		0	7	PN16dj	ML85b
68	4021BDC	8	1	PSS	21MØt	MCX	9.0m♦	0.0	15	4.0	11	72n	4.5m	1.5		4	8	F409	ML157e
69	4021BDM	8	1	PSS	21MØt	MCX	9.0m♦	0.0	15	4.0	11	72n	4.5m	1.5		5	C	F409	ML157e
70	4021BFC	8	1	PSS	21MØt	MCX	9.0m♦	0.0	15	4.0	11	72n	4.5m	1.5		4	8	F409	FL14j
71	4021BFM	8	1	PSS	21MØt	MCX	9.0m♦	0.0	15	4.0	11	72n	4.5m	1.5		5	C	F409	FL14j
72	4021BPC	8	1	PSS	21MØt	MCX	9.0m♦	0.0	15	4.0	11	72n	4.5m	1.5		4	8	F409	ML170
73	SN54LS166J	8	1	PSS	25M	BTD	190m	0.0	5.0	.70	2.0	35n	4.0m	.40		5	C	F88	ML61a
74	SN54LS166W	8	1	PSS	25M	BTD	190m	0.0	5.0	.70	2.0	35n	4.0m	.40		5	C	F88	MO004AA
75	SN74LS166J	8	1	PSS	25M	BTD	190m	0.0	5.0	.80	2.0	35n	8.0m	.50		0	7	F88	ML61a
76	SN74LS166N	8	1	PSS	25M	BTD	190m	0.0	5.0	.80	2.0	35n	8.0m	.50		0	7	F88	ML48
77#	FLJ451-74165	8	1	PSS	25M	BTX	315m	0.0	5.0	.80	2.0	40n	16m	.40		0	7	F107	MLØ
78#	FLJ455-84165	8	1	PSS	25M	BTX	315m	0.0	5.0	.80	2.0	40n	16m	.40		2	8	F107	MLØ
79#	M53366P	8	1	PSS	25MØ	BTX	360mt	0.0	5.0	.80	2.0	30nØ	16m	.40		0	7	F88	ML5a
80	N74166F	8	1	PSS	25M	BTX	360mt	0.0	5.0	.80	2.0	35nØ	16m	.40		0	7	F88	ML127m
81	N74166N	8	1	PSS	25MØ	BTX	580m	0.0	5.0	.80	2.0	26n	16m	.40		0	7	F88	MO001AE
82	SN54166J	8	1	PSS	25MØ	BTX	360mt	0.0	5.0	.80	2.0	30nØ	16m	.40		5	C	F88	ML61
83	SN54166W	8	1	PSS	25MØ	BTX	360mt	0.0	5.0	.80	2.0	30nØ	16m	.40		5	C	F88	MO004AC
84	SN74166J	8	1	PSS	25MØ	BTX	360mt	0.0	5.0	.80	2.0	30nØ	16m	.40		0	7	F88	ML61
85	SN74166N	8	1	PSS	25MØ	BTX	360mt	0.0	5.0	.80	2.0	30nØ	16m	.40		0	7	F88	ML48
86#	ZN54166J	8	1	PSS	25MØ	BTX	360mt	0.0	5.0	.80	2.0	30nØ	16m	.40		5	C	PN16fh	ML85b
87#	ZN74166E	8	1	PSS	25MØ	BTX	360mt	0.0	5.0	.80	2.0	30nØ	16m	.40		0	7	PN16fh	ML5f
88#	uPD4014C	8	1	PSS	25M	MCX	200mt	0.0	10	3.0	7.0	300n	100u			4	8	PN16fo	MO001AC
89#	uPD4021C	8	1	PSS	25M	MCX	200mt	0.0	10	3.0	7.0	300n	100u			4	8	PN16fo	MO001AC
90	54LS165DM	8	1	PSS	30MΔ	BTD	180m	0.0	5.0	.70	2.0	30n	4.0m	.40		5	C	F107	ML157e
91	54LS165FM	8	1	PSS	30MΔ	BTD	180m	0.0	5.0	.70	2.0	30n	4.0m	.40		5	C	F107	FL14j
92	74LS165DC	8	1	PSS	30MΔ	BTD	180m	0.0	5.0	.80	2.0	30n	8.0m	.50		0	7	F107	ML157e
93	74LS165FC	8	1	PSS	30MΔ	BTD	180m	0.0	5.0	.80	2.0	30n	8.0m	.50		0	7	F107	FL14j
94	74LS165PC	8	1	PSS	30MΔ	BTD	180m	0.0	5.0	.80	2.0	30n	8.0m	.50		0	7	F107	ML170
95♦	SN54LS165J	8	1	PSS	30MØ	BTD	180m	0.0	5.0	.70	2.0	40n	4.0m	.40		5	C	F107	ML61a
96♦	SN54LS165W	8	1	PSS	30MØ	BTD	180m	0.0	5.0	.70	2.0	40n	4.0m	.40		5	C	F107	FL34
97♦	SN74LS165J	8	1	PSS	30MØ	BTD	180m	0.0	5.0	.80	2.0	40n	8.0m	.50		0	7	F107	ML157a
98♦	SN74LS165N	8	1	PSS	30MØ	BTD	180m	0.0	5.0	.80	2.0	40n	8.0m	.50		0	7	F107	ML209
99♦	SN74LS165W	8	1	PSS	30MØ	BTD	180m	0.0	5.0	.80	2.0	30nØ	8.0m	.50		0	7	F107	FL34
100▼#	HD100141	8	1	SPS				4.5	2.0	-1.8	-.88	2.2n				0	8	PN24gd	ML442
101▼#	HD100141F	8	1	SPS				4.5	2.0	-1.8	-.88	2.2n				0	8	PN24gd	FL84
102	AM25LS22DC	8	1	SPS		BTD		0.0	5.0	.80	2.0$		4.0m	.40		0	7	F428	ML248

SYMBOLS AND CODES
EXPLAINED IN INTERPRETER

7. SHIFT REGISTERS

IN ORDER OF(1)No.BITS/REG(2)No.REGISTERS (3)OP.CODE(4)MAX W/C FREQ(5)STRUCT(6)TYPE No

LINE No.	6 TYPE No.	ORGANIZATION 1 BITS PER REGISTER	ORGANIZATION 2 No. REGS	3 OPER. CODE	4 MAX WORST CASE FREQ. (Hz)	5 STRUCTURE CODE	MAX OPER. POWER DISS. (W)	RATED POWER SUP. SPAN NEG. (V)	RATED POWER SUP. SPAN POS. (V)	INPUT LOGIC LEVELS MAX '0' (V)	INPUT LOGIC LEVELS MIN '1' (V)	MAX PROP. DELAY (s)	MIN OUTPUT SINK CURRENT (A)	MIN OUTPUT SINK CURRENT @ OUT (V)	MIN CLOCK FREQ. (Hz)	OPER. TEMP. RANGE CODE -	OPER. TEMP. RANGE CODE +	DRAWINGS LOGIC/ BLOCK	DRAWINGS OUTLINE
1	AM25LS22DM	8	1	SPS		BTD		0.0	5.0	.70	2.0§		4.0m	.40		5	C	F428	ML248
2	AM25LS22FM	8	1	SPS		BTD		0.0	5.0	.70	2.0§		4.0m	.40		5	C	F428	FL44
3	AM25LS22PC	8	1	SPS		BTD		0.0	5.0	.80	2.0§		4.0m	.40		0	7	F428	ML161a
4	SCL4094BC	8	1	SPS	2.5MØ	MCA	300u♦	0.0	10	.05%	9.95	250nØ	900u%	.50		5	C	F425	ML127t
5	SCL4094BE	8	1	SPS	2.5MØ	MCA	300u♦	0.0	10	.05%	9.95	250nØ	1.1m%	.50		4	8	F425	ML127u
6▼	SCL4094BHN	8	1	SPS	2.5MØ	MCA	300u♦	0.0	10	.05%	9.95	250nØ	900u%	.50		5	C	F425	CH☐
7	MC14094BAL	8	1	SPS*	3.0MØ	CMS	300u♦Ø	0.0	15	4.0	11§	270nØ	3.4m	1.5		5	C	F524	ML157a
8	MC14094BCL	8	1	SPS*	3.0MØ	CMS	1.2m♦Ø	0.0	15	4.0	11§	270nØ	3.0m	1.5		4	8	F524	ML145
9	MC14094BCP	8	1	SPS*	3.0MØ	CMS	1.2m♦Ø	0.0	15	4.0	11§	270nØ	3.0m	1.5		4	8	F524	ML145
10	CD4094BK	8	1	SPS	5.0MΔ†	MCX	2.0m♦	0.0	10	.05%	9.95	250nØ	650u	.50		5	C	F330	M0004AC
11	CD4094BD	8	1	SPS	6.0M†	MCX	500m☐	0.0	15	4.0	11§	190n	34m	1.5		5	C	F330	M0001AE
12	CD4094BE	8	1	SPS	6.0M†	MCX	500m☐	0.0	15	4.0	11§	190n	34m	1.5		4	8	F330	M0001AC
13	CD4094BF	8	1	SPS	6.0M†	MCX	500m☐	0.0	15	4.0	11§	190n	34m	1.5		5	C	F330	M0001AC
14	CD4094BH	8	1	SPS	6.0M†	MCX	500m☐	0.0	15	4.0	11§	190n	34m	1.5		5	C	F330	CH7
15#	HCC4094BD	8	1	SPS	6.0MΔ†	MCX	200m☐	0.0	15	4.0	11§	190nØ	3.4m	1.5		5	C	F330	ML1e
16#	HCC4094BF	8	1	SPS	6.0MΔ†	MCX	200m☐	0.0	15	4.0	11§	190nØ	3.4m	1.5		5	C	F330	ML127c
17#	HCC4094BK	8	1	SPS	6.0MΔ†	MCX	200m☐	0.0	15	4.0	11§	190nØ	3.4m	1.5		5	C	F330	FL31
18#	HCF4094BE	8	1	SPS	6.0MΔ†	MCX	200m☐	0.0	15	4.0	11§	190nØ	3.4m	1.5		4	8	F330	ML236
19#	HCF4094BF	8	1	SPS	6.0MΔ†	MCX	200m☐	0.0	15	4.0	11§	190nØ	3.4m	1.5		4	8	F330	ML127c
20#	GZF1100D	8	1	SPS	7.0M	MCX		0.0	5.0	1.5	3.5	180n	1.6m	.40		4	8	F326	ML125a
21	RT808	8	1	SPS$	10M	BTXØ	860m	0.0	5.0	.30	3.3†					0	7	F269	
22#	HEF4094BD	8	1	SPS	10M†	MCX	400m☐	0.0	15	4.0	11	80n	3.0m	1.5		4	8	F330	ML127x
23#	HEF4094BP	8	1	SPS	10M†	MCX	400m☐	0.0	15	4.0	11	80n	3.0m	1.5		4	8	F330	ML89j
24▼#	HEF4094BT	8	1	SPS	10M†	MCX	400m☐	0.0	15	4.0	11	80n	3.0	1.5		4	8	F330	FL83
25	SN54L164J	8	1	SPS	12MØ	BTX	88m†	0.0	5.0	.80	2.0	84nØ	4.0m	.40		5	C	F179	ML66b
26	SN54L164N	8	1	SPS	12MØ	BTX	88m†	0.0	5.0	.80	2.0	84nØ	4.0m	.40		5	C	F179	ML71
27	SN54L164T	8	1	SPS	12MØ	BTX	88m†	0.0	5.0	.80	2.0	84nØ	4.0m	.40		5	C	F179	TO84
28	SN74L164J	8	1	SPS	12MØ	BTX	88m†	0.0	5.0	.80	2.0	84nØ	4.0m	.40		0	7	F179	ML66b
29	SN74L164N	8	1	SPS	12MØ	BTX	88m†	0.0	5.0	.80	2.0	84nØ	4.0m	.40		0	7	F179	ML71
30	SN74L164T	8	1	SPS	12MØ	BTX	88m†	0.0	5.0	.80	2.0	84nØ	4.0m	.40		0	7	F179	TO84
31#	ZN54L164E	8	1	SPS	12MØ	BTX	88m†	0.0	5.0	.80	2.0	84nØ	8.0m	.40		5	C	PN14ab	ML71e
32#	ZN54L164J	8	1	SPS	12MØ	BTX	88m†	0.0	5.0	.80	2.0	84nØ	8.0m	.40		5	C	PN14ab	ML64f
33#	ZN74L164E	8	1	SPS	12MØ	BTX	88m†	0.0	5.0	.80	2.0	84nØ	8.0m	.40		0	7	PN14ab	ML71e
34#	ZN74L164J	8	1	SPS	12MØ	BTX	88m†	0.0	5.0	.80	2.0	84nØ	8.0m	.40		0	7	PN14ab	ML64f
35#	GZF1100P	8	1	SPS	14M	MCX	50u♦	0.0	10	3.0	7.0	90n	1.6m	4.75		4	8	F317	ML☐
36	JANM38510/00903BCA	8	1	SPS	18M	BTX	322m☐	0.0	5.0	.80	2.0	63n	8.0m	.40		5	C	F179	ML143
37	JANM38510/00903BCB	8	1	SPS	18M	BTX	322m☐	0.0	5.0	.80	2.0	63n	8.0m	.40		5	C	F179	ML143
38	JANM38510/00903CCA	8	1	SPS	18M	BTX	322m☐	0.0	5.0	.80	2.0	63n	8.0m	.40		5	C	F179	ML143
39	JANM38510/00903CCB	8	1	SPS	18M	BTX	322m☐	0.0	5.0	.80	2.0	63n	8.0m	.40		5	C	F179	ML143
40	JANM38510/30605BAB	8	1	SPS	20M*	BTD	149m	0.0	5.5	.70	2.0	62n	4.0m	.40		5	C	F179	FL21a
41	JANM38510/30605BAC	8	1	SPS	20M*	BTD	149m	0.0	5.5	.70	2.0	62n	4.0m	.40		5	C	F179	FL21a
42	JANM38510/30605BCA	8	1	SPS	20M*	BTD	149m	0.0	5.5	.70	2.0	62n	4.0m	.40		5	C	F179	ML142
43	JANM38510/30605BCB	8	1	SPS	20M*	BTD	149m	0.0	5.5	.70	2.0	62n	4.0m	.40		5	C	F179	ML142
44	JANM38510/30605BDA	8	1	SPS	20M*	BTD	149m	0.0	5.5	.70	2.0	62n	4.0m	.40		5	C	F179	FL22
45	JANM38510/30605BDB	8	1	SPS	20M*	BTD	149m	0.0	5.5	.70	2.0	62n	4.0m	.40		5	C	F179	FL22
46	JANM38510/30605CAB	8	1	SPS	20M*	BTD	149m	0.0	5.5	.70	2.0	62n	4.0m	.40		5	C	F179	FL21a
47	JANM38510/30605CAC	8	1	SPS	20M*	BTD	149m	0.0	5.5	.70	2.0	62n	4.0m	.40		5	C	F179	FL21a
48	JANM38510/30605CCA	8	1	SPS	20M*	BTD	149m	0.0	5.5	.70	2.0	62n	4.0m	.40		5	C	F179	ML142
49	JANM38510/30605CCB	8	1	SPS	20M*	BTD	149m	0.0	5.5	.70	2.0	62n	4.0m	.40		5	C	F179	ML142
50	JANM38510/30605CDA	8	1	SPS	20M*	BTD	149m	0.0	5.5	.70	2.0	62n	4.0m	.40		5	C	F179	FL22
51	JANM38510/30605CDB	8	1	SPS	20M*	BTD	149m	0.0	5.5	.70	2.0	62n	4.0m	.40		5	C	F179	FL22
52	54LS164DM	8	1	SPS	25M*Ø	BTD	135m	0.0	5.0	.70	2.0	27n	4.0m	.40		5	C	F403	TO116
53	54LS164FM	8	1	SPS	25M*Ø	BTD	135m	0.0	5.0	.70	2.0	27n	4.0m	.40		5	C	F403	TO86
54	54LS164J	8	1	SPS	25MØ	BTD	135m	0.0	5.0	.70	2.0	36nØ	4.0m	.40		5	C	F179	ML63c
55	54LS164W	8	1	SPS	25MØ	BTD	135m	0.0	5.0	.70	2.0	36nØ	4.0m	.40		5	C	F179	FL11c
56	74LS164DC	8	1	SPS	25M*Ø	BTD	135m	0.0	5.0	.80	2.0	27n	4.0m	.40		0	7	F403	TO116
57	74LS164FC	8	1	SPS	25M*Ø	BTD	135m	0.0	5.0	.80	2.0	27n	4.0m	.40		0	7	F403	TO86
58	74LS164PC	8	1	SPS	25M*Ø	BTD	135m	0.0	5.0	.80	2.0	27n	4.0m	.40		0	7	F403	ML233
59	54164DM	8	1	SPS	25MØ	BTD	270m	0.0	5.0	.80	2.0	42n	8.0m	.40		5	C	F403	TO116
60	54164FM	8	1	SPS	25MØ	BTD	270m	0.0	5.0	.80	2.0	42n	8.0m	.40		5	C	F403	TO86
61	74164DC	8	1	SPS	25MØ	BTD	270m	0.0	5.0	.80	2.0	42n	8.0m	.40		0	7	F403	TO116
62	74164FC	8	1	SPS	25MØ	BTD	270m	0.0	5.0	.80	2.0	42n	8.0m	.40		0	7	F403	TO86
63	74164PC	8	1	SPS	25MØ	BTD	270m	0.0	5.0	.80	2.0	42n	8.0m	.40		0	7	F403	ML233
64▼#	HD74LS164	8	1	SPS	25MΔ	BTD	112m	0.0	5.0	.80	2.0	36n	8.0m#	.50	25M	2	7	F422	ML233
65▼#	HD74LS164P	8	1	SPS	25MΔ	BTD	112m	0.0	5.0	.80	2.0	36n	8.0m#	.50	25M	2	7	F422	ML261
66	N74LS164F	8	1	SPS	25MØ	BTD	135m	0.0	5.0	.80	2.0	27n	16m	.40		0	7	F403	ML19f
67	N74LS164N	8	1	SPS	25MØ	BTD	135m	0.0	5.0	.80	2.0	27n	16m	.40		0	7	F403	ML86
68	S54LS164F	8	1	SPS	25MØ	BTD	135m	0.0	5.0	.80	2.0	27n	16m	.40		5	C	F403	ML19f
69	S54LS164W	8	1	SPS	25MØ	BTD	135m	0.0	5.0	.80	2.0	27n	16m	.40		5	C	F403	FL51
70♦	SN54LS164J	8	1	SPS	25MØ	BTD	80m†	0.0	5.0	.70	2.0	36nØ	4.0m	.40		5	C	F179	ML328
71♦	SN54LS164W	8	1	SPS	25MØ	BTD	80m†	0.0	5.0	.70	2.0	36nØ	4.0m	.40		5	C	F179	FL61
72♦	SN74LS164J	8	1	SPS	25MØ	BTD	80m†	0.0	5.0	.80	2.0	36nØ	4.0m	.40		0	7	F179	ML328
73♦	SN74LS164N	8	1	SPS	25MØ	BTD	80m†	0.0	5.0	.80	2.0	36nØ	4.0m	.40		0	7	F179	ML343
74♦	SN74LS164W	8	1	SPS	25MØ	BTD	80m†	0.0	5.0	.80	2.0	36n†	4.0m	.40		0	7	F179	FL61
75#	FLJ441-74164	8	1	SPS	25M	BTX	285m	0.0	5.0	.80	2.0	42n	8.0m	.40		0	7	F179	ML☐
76#	FLJ445-84164	8	1	SPS	25M	BTX	285m	0.0	5.0	.80	2.0	42n	8.0m	.40		2	8	F179	ML☐
77	N74164A	8	1	SPS	25MØ	BTX	270m♦	0.0	5.0	.80	2.0	42nØ	8.0m	.40		0	7	F179	ML86
78	N74164F	8	1	SPS	25M	BTX	270m♦	0.0	5.0	.80	2.0	42n	8.0m	.40		0	7	F403	ML93b
79	N74164N	8	1	SPS	25MØ	BTX	270m	0.0	5.0	.80	2.0	27n	16m	.40		0	7	F403	ML86
80#	RC54164A	8	1	SPS	25MØ	BTX	270m♦	0.0	5.0	.80	2.0	42nØ	8.0m	.40		5	C	F179	ML86
81#	RC54164F	8	1	SPS	25MØ	BTX	270m♦	0.0	5.0	.80	2.0	42nØ	8.0m	.40		5	C	F403	ML66b
82	S54164A	8	1	SPS	25MØ	BTX	270m♦	0.0	5.0	.80	2.0	42nØ	8.0m	.40		5	C	F179	ML86
83	S54164F	8	1	SPS	25MØ	BTX	270m♦	0.0	5.0	.80	2.0	42nØ	8.0m	.40		5	C	F403	ML66b
84	SN54164J	8	1	SPS	25MØ	BTX	168m†	0.0	5.0	.80	2.0	42nØ	8.0m	.40		5	C	F179	ML66b
85	SN54164W	8	1	SPS	25MØ	BTX	168m†	0.0	5.0	.80	2.0	42nØ	8.0m	.40		5	C	F179	M0004AA
86	SN74164J	8	1	SPS	25MØ	BTX	168m†	0.0	5.0	.80	2.0	42nØ	8.0m	.40		0	7	F179	ML66b
87	SN74164N	8	1	SPS	25MØ	BTX	168m†	0.0	5.0	.80	2.0	42nØ	8.0m	.40		0	7	F179	ML71
88#	ZN54164E	8	1	SPS	25MØ	BTX	168m†	0.0	5.0	.80	2.0	42nØ	8.0m	.40		5	C	PN14ab	ML71e
89#	ZN54164J	8	1	SPS	25MØ	BTX	168m†	0.0	5.0	.80	2.0	42nØ	8.0m	.40		5	C	PN14ab	ML64f
90#	ZN74164E	8	1	SPS	25MØ	BTX	168m†	0.0	5.0	.80	2.0	42nØ	8.0m	.40		0	7	PN14ab	ML71e
91#	ZN74164J	8	1	SPS	25MØ	BTX	168m†	0.0	5.0	.80	2.0	42nØ	8.0m	.40		0	7	PN14ab	ML64f
92♦	SN54LS299W	8	1	SPS	30MØ	BTD		0.0	5.0	.70	2.0§		4.0m	.40		5	C	F427	FL64
93#	uPB2164D	8	1	SPS	36M	BTX	150m	0.0	5.0	.80	2.0					2	7	PN14f	ML93f
94#	uPB74164C	8	1	SPS	36MΔØ	BTX	21m%	0.0	5.0	.80	2.0	42nØ	8.0m	.40		0	7	F422	ML235

SYMBOLS AND CODES EXPLAINED IN INTERPRETER

7. SHIFT REGISTERS

IN ORDER OF(1)No.BITS/REG(2)No.REGISTERS (3)OP.CODE(4)MAX W/C FREQ(5)STRUCT(6)TYPE No

LINE No.	6 TYPE No.	ORGANIZATION 1 BITS PER REGISTER	ORGANIZATION 2 No. REGS	3 OPER. CODE	4 MAX WORST CASE FREQ. (Hz)	5 STRUCTURE CODE	MAX OPER. POWER DISS. (W)	RATED POWER SUP. SPAN NEG. (V)	RATED POWER SUP. SPAN POS. (V)	INPUT LOGIC LEVELS MAX '0' (V)	INPUT LOGIC LEVELS MIN '1' (V)	MAX PROP. DELAY (s)	MIN OUTPUT SINK CURRENT (A)	MIN OUTPUT SINK CURRENT @ OUT (V)	MIN CLOCK FREQ. (Hz)	OPER. TEMP. RANGE CODE -	OPER. TEMP. RANGE CODE +	DRAWINGS LOGIC/ BLOCK	DRAWINGS OUTLINE
1	AM25LS164DC	8	1	SPS	45Mt	BTD		0.0	5.0	.80	2.0		4.0m	.40		0	7	F179	ML63b
2	AM25LS164DM	8	1	SPS	45Mt	BTD		0.0	5.0	.70	2.0		4.0m	.40		5	C	F179	ML63b
3	AM25LS164FM	8	1	SPS	45Mt	BTD		0.0	5.0	.70	2.0		4.0m	.40		5	C	F179	FL11b
4	AM25LS164PC	8	1	SPS	45Mt	BTD		0.0	5.0	.80	2.0		4.0m	.40		0	7	F179	ML89d
5	AM25LS23DC	8	1	SPS	50Mt	BTD		0.0	5.0	.80	2.0§		4.0m	.40		0	7	F429	ML248
6	AM25LS23DM	8	1	SPS	50Mt	BTD		0.0	5.0	.70	2.0§		4.0m	.40		5	C	F429	ML248
7	AM25LS23FM	8	1	SPS	50Mt	BTD		0.0	5.0	.70	2.0§		4.0m	.40		5	C	F429	FL44
8	AM25LS23PC	8	1	SPS	50Mt	BTD		0.0	5.0	.80	2.0§		4.0m	.40		0	7	F429	ML161a
9	AM25LS299DC	8	1	SPS	50Mt	BTD		0.0	5.0	.80	2.0§		4.0m	.40		0	7	F427	ML248
10	AM25LS299DM	8	1	SPS	50Mt	BTD		0.0	5.0	.70	2.0§		4.0m	.40		5	C	F427	ML248
11	AM25LS299FM	8	1	SPS	50Mt	BTD		0.0	5.0	.70	2.0§		4.0m	.40		5	C	F427	FL44
12	AM25LS299PC	8	1	SPS	50Mt	BTD		0.0	5.0	.80	2.0§		4.0m	.40		0	7	F427	ML161a
13#	7491PC	8	1	SS	18M		175m	0.0	5.0	.80	2.0	40n			10M	0	7	F560	ML180
14	CM4021AE	8§	1	SSS	600k	MCX	200mØ	0.0	5.0	.01%Ø	4.99	1.0uØ				4	8	PN16dj	ML4g
15	CM4021AD	8§	1	SSS	1.0M	MCX	200mØ	0.0	5.0	.01%Ø	4.99	750nØ				5	C	PN16dj	ML4g
16	SN54L91J	8	1	SSS	6.5Mt	BTX	17mt	0.0	5.0	.70	2.0	150nØ	2.0m	.30		5	C	F91	ML66b
17	SN54L91N	8	1	SSS	6.5Mt	BTX	17mt	0.0	5.0	.70	2.0	150nØ	2.0m	.30		5	C	F91	ML71
18	SN54L91T	8	1	SSS	6.5Mt	BTX	17mt	0.0	5.0	.70	2.0	150nØ	2.0m	.30		5	C	F91	TO84
19	SN74L91J	8	1	SSS	6.5Mt	BTX	17mt	0.0	5.0	.70	2.0	150nØ	3.6m	.40		0	7	F91	ML66b
20	SN74L91N	8	1	SSS	6.5Mt	BTX	17mt	0.0	5.0	.70	2.0	150nØ	3.6m	.40		0	7	F91	ML71
21#	ZN54L91E	8	1	SSS	6.5MtØ	BTX	33mt	0.0	5.0	.80	2.0	150nØ	3.6m	.40		5	C	PN14w	ML71e
22#	ZN54L91J	8	1	SSS	6.5MtØ	BTX	33mt	0.0	5.0	.80	2.0	150nØ	3.6m	.40		5	C	PN14w	ML64f
23#	ZN74L91E	8	1	SSS	6.5MtØ	BTX	33mt	0.0	5.0	.80	2.0	150nØ	3.6m	.40		0	7	PN14w	ML71e
24#	ZN74L91J	8	1	SSS	6.5MtØ	BTX	33mt	0.0	5.0	.80	2.0	150nØ	3.6m	.40		0	7	PN14w	ML64f
25♦	54LS91J	8	1	SSS	10MØ	BTD	100m	0.0	5.0	.70	2.0	40nØ	4.0m	.40		5	C	F91	F562
26♦	54LS91W	8	1	SSS	10MØ	BTD	100m	0.0	5.0	.70	2.0	40nØ	4.0m	.40		5	C	F91	F562a
27	74LS91J	8	1	SSS	10MØ	BTD	100m	0.0	5.0	.80	2.0	40nØ	4.0m	.40		0	7	F91	ML63c
28♦	74LS91W	8	1	SSS	10MØ	BTD	100m	0.0	5.0	.80	2.0	40nØ	4.0m	.40		0	7	F91	F562a
29	5491ADM	8	1	SSS	10MØ	BTX	250m	0.0	5.0	.80	2.0	40n	16m	.40		5	C	PN14w	TO116
30	5491AFM	8	1	SSS	10MØ	BTX	250m	0.0	5.0	.80	2.0	40n	16m	.40		5	C	PN14w	TO86
31	7491ADC	8	1	SSS	10MØ	BTX	290m	0.0	5.0	.80	2.0	40n	16m	.40		0	7	PN14w	ML127e
32	7491AFC	8	1	SSS	10MØ	BTX	290m	0.0	5.0	.80	2.0	40n	16m	.40		0	7	PN14w	FL14g
33	7491APC	8	1	SSS	10MØ	BTX	290m	0.0	5.0	.80	2.0	40n	16m	.40		0	7	PN14w	ML233
34#	FLJ221-7491A	8	1	SSS	10M	BTX	305m	0.0	5.0	.80	2.0	40n	16m	.40		0	7	F466	MLØ
35#	FLJ225-8491A	8	1	SSS	10M	BTX	305m	0.0	5.0	.80	2.0	40n	16m	.40		2	8	F466	MLØ
36#	M74LS91P	8	1	SSS	10MØ	BTX	60mt	0.0	5.0	0.8	2.0	40nØ	4.0m	0.4		0	7	F91	ML408
37	N7491A	8	1	SSS	10MØ	BTX	175mt	0.0	5.0	.80	2.0	40nØ	16m	.40		0	7	F91	ML86
38	N7491AF	8	1	SSS	10MØ	BTX	290m	0.0	5.0	.80	2.0	40n	16m	.40		0	7		ML19f
39	N7491AN	8	1	SSS	10MØ	BTX	290m	0.0	5.0	.80	2.0	40n	16m	.40		0	7		ML86
40	N7491F	8	1	SSS	10MØ	BTX	290m♦	0.0	5.0	.80	2.0	40nØ	16m	.40		0	7	F91	ML93b
41	S5491A	8	1	SSS	10MØ	BTX	175mt	0.0	5.0	.80	2.0	40nØ	16m	.40		5	C	F91	ML86
42	S5491AF	8	1	SSS	10MØ	BTX	250m	0.0	5.0	.80	2.0	40n	16m	.40		5	C		ML19f
43	S5491AW	8	1	SSS	10MØ	BTX	250m	0.0	5.0	.80	2.0	40n	16m	.40		5	C		FL51
44	S5491F	8	1	SSS	10MØ	BTX	250m♦	0.0	5.0	.80	2.0	40nØ	16m	.40		5	C	F91	ML93b
45	S5491W	8	1	SSS	10MØ	BTX	250m♦	0.0	5.0	.80	2.0	40nØ	16m	.40		5	C	F91	FL24
46	SN54LS91J	8	1	SSS	10MØ	BTX	60mt	0.0	5.0	.70	2.0	40nØ	4.0m	.40		5	C	F91	ML66b
47	SN54LS91W	8	1	SSS	10MØ	BTX	60mt	0.0	5.0	.70	2.0	40nØ	4.0m	.40		5	C	F91	MO004AA
48	SN74LS91J	8	1	SSS	10MØ	BTX	60mt	0.0	5.0	.80	2.0	40nØ	4.0m	.40		0	7	F91	ML66b
49	SN74LS91N	8	1	SSS	10MØ	BTX	60mt	0.0	5.0	.80	2.0	40nØ	4.0m	.40		0	7	F91	ML71
50	SN5491AJ	8	1	SSS	10MØ	BTX	175mt	0.0	5.0	.80	2.0	40nØ	16m	.40		5	C	F91	ML66b
51	SN5491AW	8	1	SSS	10MØ	BTX	175mt	0.0	5.0	.80	2.0	40nØ	16m	.40		5	C	F91	MO004AA
52	SN7491AJ	8	1	SSS	10MØ	BTX	175mt	0.0	5.0	.80	2.0	40nØ	16m	.40		0	7	F91	ML66b
53	SN7491AN	8	1	SSS	10MØ	BTX	175mt	0.0	5.0	.80	2.0	40nØ	16m	.40		0	7	F91	ML71
54#	ZN5491AE	8	1	SSS	10MØ	BTX	175mt	0.0	5.0	.80	2.0	40nØ	16m	.40		5	C	PN14w	ML71e
55#	ZN5491AJ	8	1	SSS	10MØ	BTX	175mt	0.0	5.0	.80	2.0	40nØ	16m	.40		5	C	PN14w	ML64f
56#	ZN7491AE	8	1	SSS	10MØ	BTX	175mt	0.0	5.0	.80	2.0	40nØ	16m	.40		0	7	PN14w	ML71e
57#	ZN7491AJ	8	1	SSS	10MØ	BTX	175mt	0.0	5.0	.80	2.0	40nØ	16m	.40		0	7	PN14w	ML64f
58	N8276A	8	1	SSS	15MØ	BTX	340mØ	0.0	5.0	.40%	2.6	33nØ	16m	.40		0	7	F123	ML86
59	N8276F	8	1	SSS	15MØ	BTX	340mØ	0.0	5.0	.40%	2.6	33nØ	16m	.40		0	7	F123	ML19f
60	TMSR8	8	1	SSS	15MΔ	BTXØ	175m	0.0	5.0	.22t	3.3t	40n				0	7	F343	
61#	M53291P	8	1	SSS	18MØ	BTX	175mt	0.0	5.0	.40%	2.4	25nt	16m	.40		0	7	F35	TO116
62#	uPB7491C	8	1	SSS	18MΔØ	BTX	290m♦	0.0	5.0	.80	2.0	40nØ	16m	.40		0	7	F35	ML235
63▼#	HD74LS166	8	1	SSS	25MΔ	BTD	190m	0.0	5.0	.80	2.0	30n	8.0m#	.50	35Mt	2	7	F88	ML389m
64▼#	HD74LS166P	8	1	SSS	25MΔ	BTD	190m	0.0	5.0	.80	2.0	30n	8.0m#	.50	35Mt	2	7	F88	ML394
65▼#	HD74LS91	8	1	SSS	42MtΔ	BTD	100m	0.0	5.0	.80	2.0	40n	8.0m#	.50	18Mt	2	7	F560	ML233
66▼#	HD74LS91P	8	1	SSS	42MtΔ	BTD	100m	0.0	5.0	.80	2.0	40n	8.0m#	.50	18Mt	2	7	F560	ML261
67#	RC5491A	8	1	SSS	100MØ	BTX	175mt	0.0	5.0	.80	2.0	40nØ	16m	.40		5	C	F91	ML86
68#	RC5491F	8	1	SSS	100MØ	BTX	250m♦	0.0	5.0	.80	2.0	40nØ	16m	.40		5	C	F91	ML93b
69#	RC5491W	8	1	SSS	100MØ	BTX	250m♦	0.0	5.0	.80	2.0	40nØ	16m	.40		5	C	F91	FL24
70	RT8O7	8§	2	PPS	10M	BTXØ	900m	0.0	5.0	.30	3.3t					0	7	F268	
71	MC8328L	8	2	SSS	1.0Mt	BTX	250mt	0.0	5.0	.45%	2.4	70n	3.0m	.45		0	7	F38	ML5
72	MC8328P	8	2	SSS	1.0Mt	BTX	250mt	0.0	5.0	.45%	2.4	70n	3.0m	.45		0	7	F38	ML40a
73	MC9328L	8	2	SSS	1.0Mt	BTX	250mt	0.0	5.0	.40%	2.4	70n	3.0m	.40		5	C	F38	ML5
74	93L28DC	8	2	SSS§	5.0M*Ø	BTX	127m	0.0	5.0	.80	2.0	110n	8.0m	.30		0	7	F1	ML127k
75	93L28DM	8	2	SSS§	5.0M*Ø	BTX	127m	0.0	5.0	.70	2.0	110n	4.8m	.30		5	C	F1	ML127k
76	93L28FC	8	2	SSS§	5.0M*Ø	BTX	127m	0.0	5.0	.80	2.0	110n	8.0m	.30		0	7	F1	FL14g
77	93L28FM	8	2	SSS§	5.0M*Ø	BTX	127m	0.0	5.0	.70	2.0	110n	4.8m	.30		5	C	F1	MFL14g
78	93L28PC	8	2	SSS§	5.0M*Ø	BTX	127m	0.0	5.0	.80	2.0	110n	8.0m	.30		0	7	F1	ML170
79#	FLJ481-4932	8	2	SSS	10M	BTX	610m	0.0	5.0	.80	2.0	40n	16m	.40		0	7		MLØ
80#	FLJ485-49832	8	2	SSS	10M	BTX	610m	0.0	5.0	.80	2.0	40n	16m	.40		2	8		MLØ
81	JANM38510/15902BEA	8	2	SSS	13M	BTX	424mØ	0.0	5.0	.80	2.0	72n	16m	.40		5	C	F38	ML143
82	JANM38510/15902BEB	8	2	SSS	13M	BTX	424mØ	0.0	5.0	.80	2.0	72n	16m	.40		5	C	F38	ML143
83	JANM38510/15902BFA	8	2	SSS	13M	BTX	424mØ	0.0	5.0	.80	2.0	72n	16m	.40		5	C	F38	FL31
84	JANM38510/15902BFB	8	2	SSS	13M	BTX	424mØ	0.0	5.0	.80	2.0	72n	16m	.40		5	C	F38	FL31
85	JANM38510/15902CEA	8	2	SSS	13M	BTX	424mØ	0.0	5.0	.80	2.0	72n	16m	.40		5	C	F38	ML143
86	JANM38510/15902CEB	8	2	SSS	13M	BTX	424mØ	0.0	5.0	.80	2.0	72n	16m	.40		5	C	F38	ML143
87	JANM38510/15902CFA	8	2	SSS	13M	BTX	424mØ	0.0	5.0	.80	2.0	72n	16m	.40		5	C	F38	FL31
88	JANM38510/15902CFB	8	2	SSS	13M	BTX	424mØ	0.0	5.0	.80	2.0	72n	16m	.40		5	C	F38	FL31
89	N8277B	8	2	SSS	15MØ	BTX	540m	0.0	5.0	.40%	2.6	40nØ	16m	.40		0	7	F122	ML93b
90	N8277F	8	2	SSS	15MØ	BTX	540m	0.0	5.0	.40%	2.6	40nØ	16m	.40		0	7	F122	ML60a
91	N8277N	8	2	SSS	15MØ	BTX	515m	0.0	5.0	.80	2.0	40n	16m	.40		0	7	F122	MO001AB
92	TMSR16	8	2	SSS	15MΔ	BTXØ	350M	0.0	5.0	.22t	3.3t	40n				0	7	F343a	
93	AM93L28DC	8	2	SSS	16MtØ	BTX	126m♦	0.0	5.0	.70	2.0	110nØ	4.9m	.30		0	7	F1	ML127d
94	AM93L28DM	8	2	SSS	16MtØ	BTX	126m♦	0.0	5.0	.70	2.0	110nØ	4.9m	.30		5	C	F1	ML62c
95	AM93L28FM	8	2	SSS	16MtØ	BTX	126m♦	0.0	5.0	.70	2.0	110nØ	4.9m	.30		0	7	F1	FL33b
96	AM93L28PC	8	2	SSS	16MtØ	BTX	126m♦	0.0	5.0	.70	2.0	110nØ	4.9m	.30		5	C	F1	ML89a
97	9328DC	8	2	SSS	20MØ	BTX	385m	0.0	5.0	.80	2.0	50n	16m	.40		0	7	F1	ML127k
98	9328DM	8	2	SSS	20MØ	BTX	385m	0.0	5.0	.80	2.0	50n	16m	.40		5	C	F1	ML127k
99	9328FC	8	2	SSS	20MØ	BTX	385m	0.0	5.0	.80	2.0	50n	16m	.40		0	7	F1	FL14g
100	9328FM	8	2	SSS	20MØ	BTX	385m	0.0	5.0	.80	2.0	50n	16m	.40		5	C	F1	FL14g
101	9328PC	8	2	SSS	20MØ	BTX	385m	0.0	5.0	.80	2.0	50n	16m	.40		0	7	F1	ML170
102	AM9328DC	8	2	SSS	30MtØ	BTX	440m♦	0.0	5.0	.80	2.0	39nØ	16m	.40		0	7	F1	ML127k

SYMBOLS AND CODES EXPLAINED IN INTERPRETER

7. SHIFT REGISTERS

IN ORDER OF(1)No.BITS/REG(2)No.REGISTERS (3)OP.CODE(4)MAX W/C FREQ(5)STRUCT(6)TYPE No

LINE No.	6 TYPE No.	ORGANIZATION 1 BITS PER REGISTER	ORGANIZATION 2 No. REGS	3 OPER. CODE	4 MAX WORST CASE FREQ. (Hz)	5 STRUCTURE CODE	MAX OPER. POWER DISS. (W)	RATED POWER SUP. SPAN NEG. (V)	RATED POWER SUP. SPAN POS. (V)	INPUT LOGIC LEVELS MAX '0' (V)	INPUT LOGIC LEVELS MIN '1' (V)	MAX PROP. DELAY (s)	MIN OUTPUT SINK CURRENT (A)	MIN OUTPUT SINK CURRENT @ OUT (V)	MIN CLOCK FREQ. (Hz)	OPER. TEMP. RANGE CODE -	OPER. TEMP. RANGE CODE +	DRAWINGS LOGIC/ BLOCK	DRAWINGS OUTLINE
1	AM9328DM	8	2	SSS	30M†Ø	BTX	385m♦	0.0	5.0	.80	2.0	39nØ	16m	.40		5	C	F1	ML62c
2	AM9328FM	8	2	SSS	30M†Ø	BTX	440m♦	0.0	5.0	.80	2.0	39nØ	16m	.40		5	C	F1	FL33b
3	AM9328PC	8	2	SSS	30M†Ø	BTX	385m♦	0.0	5.0	.80	2.0	39nØ	16m	.40		0	7	F1	ML89a
4	TMSR24	8	3	SSS	15MΔ	BTXØ	525m	0.0	5.0	.22†	3.3†	40n				0	7	F344	
5	TMSR32	8	4	SSS	15MΔ	BTXØ	700m	0.0	5.0	.22†	3.3†	40n				0	7	F344a	
6	T104	8	6	SSS	20M	BTXØ	1.1	4.7	5.3	.80	1.8	18n†	9.6m	.45		0	7		PL☑
7	SCL4094BD	8	18*	SPS	6M	MCX	125m♦	0.0	15			600n	1.0uΔ		1.2	5	C	F559	ML328
8	SCL4094BF	8	18*	SPS	6M	MCX	125m♦	0.0	15			600n	1.0uΔ		1.2	5	C	F559	FL28
9▼	FR1502E2C	9	40	SSS▼	250k☑			12	5.0	0.8	3.5§	250n	-4m☑	0.0		0	7	PN28ai	ML432
10▼	FR1502F2C	9	40	SSS▼	250k☑			12	5.0	0.8	3.5§	250n	-4m☑	0.0		0	7	PN28ai	ML433
11▼	FR1502E1C	9	40	SSS▼	500k☑			12	5.0	0.8	3.5§	250n	-4m☑	0.0		0	7	PN28ai	ML432
12▼	FR1502F1C	9	40	SSS▼	500k☑			12	5.0	0.8	3.5§	250n	-4m☑	0.0		0	7	PN28ai	ML433
13▼	FR1502EC	9	40	SSS▼	1.0M☑			12	5.0	0.8	3.5§	250n	-4m☑	0.0		0	7	PN28ai	ML432
14▼	FR1502FC	9	40	SSS▼	1.0M☑			12	5.0	0.8	3.5§	250n	-4m☑	0.0		0	7	PN28ai	ML433
15▼	FR1502E3C	9	40	SSS▼	1.5M☑			12	5.0	0.8	3.54§	250n	-4m☑	0.0		0	7	PN28ai	ML432
16▼	FR1502F3C	9	40	SSS▼	1.5M☑			12	5.0	0.8	3.5§	250n	-4m☑	0.0		0	7	PN28ai	ML433
17	N8202F	10	1	PPS	15M*	BTX	580m	0.0	5.0	.40%	2.6	45n	9.6m	.40		0	7	PN24fz	ML133
18	N8202N	10	1	PPS	15M*	BTX	580m	0.0	5.0	.40%	2.6	45n	9.6m	.40		0	7	PN24fz	ML135
19	N8202Q	10	1	PPS	15M*	BTX	580m	0.0	5.0	.40%	2.6	45n	9.6m	.40		0	7	PN24fz	FL3b
20	N8203F	10	1	PPS	15M*	BTX	580m	0.0	5.0	.40%	2.6	45n	9.6m	.40		0	7	PN24ga	ML133
21	N8203N	10	1	PPS	15M*	BTX	580m	0.0	5.0	.40%	2.6	45n	9.6m	.40		0	7	PN24ga	ML135
22	N8203Q	10	1	PPS	15M*	BTX	580m	0.0	5.0	.40%	2.6	45n	9.6m	.40		0	7	PN24ga	FL3b
23#	RC8202F	10	1	PPS	15M*	BTX	580m	0.0	5.0	.40%	2.6	45n	9.6m	.40		5	C	F302b	ML133
24#	RC8202N	10	1	PPS	15M*	BTX	580m	0.0	5.0	.40%	2.6	45n	9.6m	.40		5	C	F302b	ML135
25#	RC8202Q	10	1	PPS	15M*	BTX	580m	0.0	5.0	.40%	2.6	45n	9.6m	.40		5	C	F302b	FL3b
26#	RC8203F	10	1	PPS	15M*	BTX	580m	0.0	5.0	.40%	2.6	45n	9.6m	.40		5	C	F302c	ML133
27#	RC8203N	10	1	PPS	15M*	BTX	580m	0.0	5.0	.40%	2.6	45n	9.6m	.40		5	C	F302c	ML135
28#	RC8203Q	10	1	PPS	15M*	BTX	580m	0.0	5.0	.40%	2.6	45n	9.6m	.40		5	C	F302c	FL3b
29	S8202F	10	1	PPS	15M*	BTX	580m	0.0	5.0	.40%	2.6	45n	9.6m	.40		5	C	PN24fz	ML133
30	S8202N	10	1	PPS	15M*	BTX	580m	0.0	5.0	.40%	2.6	45n	9.6m	.40		5	C	PN24fz	ML135
31	S8202Q	10	1	PPS	15M*	BTX	580m	0.0	5.0	.40%	2.6	45n	9.6m	.40		5	C	PN24fz	FL3b
32	S8203F	10	1	PPS	15M*	BTX	580m	0.0	5.0	.40%	2.6	45n	9.6m	.40		5	C	PN24ga	ML133
33	S8203N	10	1	PPS	15M*	BTX	580m	0.0	5.0	.40%	2.6	45n	9.6m	.40		5	C	PN24ga	ML135
34	S8203Q	10	1	PPS	15M*	BTX	580m	0.0	5.0	.40%	2.6	45n	9.6m	.40		5	C	PN24ga	FL3b
35	N8274B	10	1	PSS	25MØ	BTX	567mØ	0.0	5.0	.40%	2.6	40nØ	16m	.40		0	7	F168	ML89a
36	N8274F	10	1	PSS	25MØ	BTX	567mØ	0.0	5.0	.40%	2.6	40nØ	16m	.40		0	7	F168	ML60a
37	N8274N	10	1	PSS	25MØ	BTX	540m	0.0	5.0	.80	2.0	40n	16m	.40		0	7	F168	MO001AE
38	N8274W	10	1	PSS	25MØ	BTX	567mØ	0.0	5.0	.40%	2.6	40nØ	16m	.40		0	7	F168	FL25
39#	RC8273B	10	1	PSS	25MØ	BTX	567mØ	0.0	5.0	.40%	2.6	40nØ	16m	.40		5	C	F167	ML89a
40#	RC8273F	10	1	PSS	25MØ	BTX	567mØ	0.0	5.0	.40%	2.6	40nØ	16m	.40		5	C	F167	ML60a
41#	RC8273W	10	1	PSS	25MØ	BTX	567mØ	0.0	5.0	.40%	2.6	40nØ	16m	.40		5	C	F167	FL255
42	S8274B	10	1	PSS	25MØ	BTX	567mØ	0.0	5.0	.40%	2.6	40nØ	16m	.40		5	C	F168	ML89a
43	S8274F	10	1	PSS	25MØ	BTX	567mØ	0.0	5.0	.40%	2.6	40nØ	16m	.40		5	C	F168	ML60a
44	S8274W	10	1	PSS	25MØ	BTX	567mØ	0.0	5.0	.40%	2.6	40nØ	16m	.40		5	C	F168	FL25
45	3801-4-6H	10	1	SPS$	500k	MPX	190m	27	0.0	-2.0	-9.0					5	8	F77	ML70
46	3801-9-6H	10	1	SPS$	500k	MPX	190m	27	0.0	-2.0	-9.0					0	7	F77	ML70
47	N8273B	10	1	SPS	25MØ	BTX	540mØ	0.0	5.0	.40%	2.6	40nØ	9.6m	.40		0	7	F167	ML89a
48	N8273F	10	1	SPS	25MØ	BTX	540mØ	0.0	5.0	.40%	2.6	40nØ	9.6m	.40		0	7	F167	ML60a
49	N8273N	10	1	SPS	25MØ	BTX	515m	0.0	5.0	.80	2.0	40n	9.6m	.40		0	7	F167	MO001AE
50	N8273W	10	1	SPS	25MØ	BTX	540mØ	0.0	5.0	.40%	2.6	40nØ	9.6m	.40		0	7	F167	FL25
51#	RC8274B	10	1	SPS	25MØ	BTX	540mØ	0.0	5.0	.40%	2.6	40nØ	9.6m	.40		5	C	F168	ML89a
52#	RC8274F	10	1	SPS	25MØ	BTX	540mØ	0.0	5.0	.40%	2.6	40nØ	9.6m	.40		5	C	F168	ML60a
53#	RC8274W	10	1	SPS	25MØ	BTX	540mØ	0.0	5.0	.40%	2.6	40nØ	9.6m	.40		5	C	F168	FL25
54	S8273B	10	1	SPS	25MØ	BTX	540mØ	0.0	5.0	.40%	2.6	40nØ	9.6m	.40		5	C	F167	ML89a
55	S8273F	10	1	SPS	25MØ	BTX	540mØ	0.0	5.0	.40%	2.6	40nØ	9.6m	.40		5	C	F167	ML60a
56	S8273W	10	1	SPS	25MØ	BTX	540mØ	0.0	5.0	.40%	2.6	40nØ	9.6m	.40		5	C	F167	FL25
57	I113	12	1		5.0M	BDX	445m♦	5.0	5.0	0.0	5.0	35n						F381	PL☑
58	AM25L04DC	12	1	PPS	3.5MΔ	BTX	225m♦	0.0	5.0	.70	2.0	140n	4.9m	.30		0	7	F257a	ML148
59	AM2504DC	12	1	PPS	15M*	BTX	620m♦	0.0	5.0	.80	2.0	45nØ	9.6m	.40		0	7	F257a	ML88d
60	AM2504DM	12	1	PPS	15M*	BTX	550m♦	0.0	5.0	.80	2.0	38nØ	9.6m	.40		5	C	F257a	ML88e
61	AM2504FM	12	1	PPS	15M*	BTX	550m♦	0.0	5.0	.80	2.0	38nØ	9.6m	.40		5	C	F257a	FL40
62	AM2504PC	12	1	PPS	15M*	BTX	620m♦	0.0	5.0	.80	2.0	38nØ	9.6m	.40		0	7	F257a	ML88c
63	AM25L04DM	12	1	PPS	25MΔ†	BTX	550m♦	0.0	5.0	.80	2.0	38n	9.6m	.40		5	C	F257a	ML148
64	AM25L04FM	12	1	PPS	25MΔ†	BTX	550m♦	0.0	5.0	.80	2.0	38n	9.6m	.40		5	C	F257a	FL33a
65	AM25L04PC	12	1	PPS	25MΔ†	BTX	620m♦	0.0	5.0	.80	2.0	38n	9.6m	.40		0	7	F257a	ML72a
66	I768	16			25M	BTX	172m	0.0	7.0	.80	2.0	24n				0	7		PL☑
67	I769	16	1		20M	BTX		0.0	5.0	.80	2.0	40n				0	7		PL☑
68	SN54LS673J	16	1	PSS	20MΔØ	BTD	400m	0.0	5.0	.70	2.0	45n	4.0m	.40		5	C	PN24gf	MO015AA
69	SN54LS673W	16	1	PSS	20MΔØ	BTD	400m	0.0	5.0	.70	2.0	45n	4.0m	.40		5	C	PN24gf	MO019AA
70	SN54LS674J	16	1	PSS	20MΔØ	BTD	200m	0.0	5.0	.70	2.0	45n	4.0m	.40		5	C	PN24gg	MO015AA
71	SN54LS674W	16	1	PSS	20MΔØ	BTD	200m	0.0	5.0	.70	2.0	45n	4.0m	.40		5	C	PN24gg	MO019AA
72	SN74LS674J	16	1	PSS	20M*	BTD		0.0	5.0	.80	2.0§	45n	4.0m	.40		0	7	PN24gg	MO015AA
73	SN74LS674N	16	1	PSS	20M*	BTD		0.0	5.0	.80	2.0§	45n	4.0m	.40		0	7	PN24gg	ML72c
74	SN74LS673J	16	1	SPS*	20M*	BTD		0.0	5.0	.80	2.0§	45n	4.0m	.40		0	7	PN24gf	MO015AA
75	SN74LS673N	16	1	SPS*	20M*	BTD		0.0	5.0	.80	2.0§	45n	4.0m	.40		0	7	PN24gf	ML72c
76#	RC2001K	16	2	SSS	1.0M	MPG		28	0.0	-2.0	-1.0	475n				5	8	F48	CY7
77	S2001K	16	2	SSS	1.0M	MPG		28	0.0	-2.0	-10	475n				5	8	F48	CY7
78	SS6-8212-16	16	2	SSS	2.0M	MPN	200m	12	5.0	.80	3.5	300n	1.6m	.40		5	C	F25	TO78
79▼#	HD100145	16	4					4.5	2.0	-1.8	-.88					0	8	F569	ML442
80▼#	HD100145F	16	4					4.5	2.0	-1.8	-.88					0	8	F569	FL84
81	CD40105BH	16	4	SS▼	4.0M	MCX	500m☑	0.0	15	4.0	11§	130n	3.4m	1.5		5	C	F373	CH14
82#	HCC40105BD	16	4	SSS▼		MCX	200m☑Δ	0.0	1.5	4.0Ø	11§	130nØ	3.4mØ	1.5		5	C	F373	ML302
83#	HCC40105BF	16	4	SSS▼		MCX	200m☑Δ	0.0	1.5	4.0Ø	11§	130nØ	3.4mØ	1.5		5	C	F373	ML300
84#	HCC40105BK	16	4	SSS▼		MCX	200m☑Δ	0.0	1.5	4.0Ø	11§	130nØ	3.4mØ	1.5		5	C	F373	FL☑
85#	HCF40105BE	16	4	SSS▼		MCX	200m☑Δ	0.0	1.5	4.0Ø	11§	130nØ	3.4mØ	1.5		4	8	F373	ML301
86#	HCF40105BF	16	4	SSS▼		MCX	200m☑Δ	0.0	1.5	4.0Ø	11§	130nØ	3.4mØ	1.5		4	8	F373	ML300
87	CD40105BD	16	4	SSS▼	4.0M	MCX	500m☑	0.0	15	4.0	11§	130n	3.4m	1.5		5	C	F373	MO001AE
88	CD40105BE	16	4	SSS▼	4.0M	MCX	500m☑	0.0	15	4.0	11§	130n	3.4m	1.5		4	8	F373	MO001AC
89	CD40105BF	16	4	SSS▼	4.0M	MCX	500m☑	0.0	15	4.0	11§	130n	3.4m	1.5		5	C	F373	MO001AC
90	SS5-1032-31	16§	6	SSS	1.0M	MPX	200m†Ø	12	5.0	.80	3.5	450n	1.6m	.40		0	7	F440	ML5c
91	RT813	17§	2	SPS	10M	BTXØ	1.7	0.0	5.0	.30	3.3†					0	7	F271	
92	T113	18	1		10M	BTX	420m	4.8	5.2	0.0	5.0	8.0n				0	7		PL☑
93▼#	HD14006B	18	1	PPS	6.0M☑	MCX		0.0	15	4.0	11	200n				4	8	F236	
94	MS618	24§	4	SSS	2.5M	MCX	20n♦Ø	10	0.0	.01%Ø	9.99	700n				5	C	F59	ML☑
95#	RC2002K	25	2	SSS	1.0M	MPG		28	0.0	-2.0	-1.0	450n				5	8	F48	CY7
96	S2002K	25	2	SSS	1.0M	MPG		28	0.0	-2.0	-10	450n				5	8	F48	CY7
97♦	MD4330BD	30	1	SSS		MCX		0.0	18	.01%	9.99	300n†	800u	.50		5	C	PN40n	ML417
98♦	MD4330BE	30	1	SSS		MCX		0.0	18	.01%	9.99	300n†	800u	.50		4	8	PN40n	ML417
99	MD4331BE	30	1	SSS		MCX		0.0	18	.01%	9.99	300n†	800u	.50		4	8	PN40n	
100	MS4331BC	30	1	SSS		MCX		0.0	18	.01%	9.99	300n†	800u	.50		4	8	PN40n	
101♦	MS4331BD	30	1	SSS		MCX		0.0	18	.01%	9.99	300n†	800u	.50		5	C	PN40n	ML417
102♦	MD4330BC	30	1	SSS	1.0MΔ	MCX		0.0	18	.01%	9.99	300n†	800u	.50		4	8	PN40n	ML417
103	RT809	30	1	SSS	10M	BTXØ	1.7	0.0	5.0	.30	3.3†					0	7	F270	
104♦	MD4332BC	32	1	SSS		MCX		0.0	18	.01%	9.99	300n†	800u	.50		4	8	PN40o	ML417
105♦	MD4332BD	32	1	SSS		MCX		0.0	18	.01%	9.99	300n†	800u	.50		5	C	PN40o	ML417
106♦	MD4332BE	32	1	SSS		MCX		0.0	18	.01%	9.99	300n†	800u	.50		4	8	PN40o	ML417
107	CD40100BD	32	1	SSS	3.0M	MCX	500m☑	0.0	15	4.0	11	230n	3.4m	1.5		5	C	F465	MO001AE
108	CD40100BE	32	1	SSS	3.0M	MCX	500m☑	0.0	15	4.0	11	230n	3.4m	1.5		4	8	F465	MO001AC
109	CD40100BF	32	1	SSS	3.0M	MCX	500m☑	0.0	15	4.0	11	230n	3.4m	1.5		5	C	F465	MO001AC
110	CD40100BH	32	1	SSS	3.0M	MCX		0.0	15	4.0	11	230n	3.4m	1.5		5	C	F465	CH12

SYMBOLS AND CODES EXPLAINED IN INTERPRETER

7. SHIFT REGISTERS

IN ORDER OF(1)No.BITS/REG(2)No.REGISTERS (3)OP.CODE(4)MAX W/C FREQ(5)STRUCT(6)TYPE No

LINE No.	6 TYPE No.	ORGANIZATION 1 BITS PER REGISTER	ORGANIZATION 2 No. REGS	3 OPER. CODE	4 MAX WORST CASE FREQ. (Hz)	5 STRUC TURE CODE	MAX OPER. POWER DISS. (W)	RATED POWER SUP. SPAN NEG. (V)	RATED POWER SUP. SPAN POS. (V)	INPUT LOGIC LEVELS MAX '0' (V)	INPUT LOGIC LEVELS MIN '1' (V)	MAX PROP. DELAY (s)	MIN OUTPUT SINK CURRENT (A)	MIN OUTPUT SINK CURRENT @ OUT (V)	MIN CLOCK FREQ. (Hz)	OPER. TEMP. RANGE CODE -	OPER. TEMP. RANGE CODE +	DRAWINGS LOGIC/ BLOCK	DRAWINGS OUTLINE
1#	RC2003K	32	2	SSS	1.0M	MPG		28	0.0	-2.0	-1.0	450n				5	8	F48	CY7
2	S2003K	32	2	SSS	1.0M	MPG		28	0.0	-2.0	-10	450n				5	8	F48	CY7
3	3348	32	6	SSS	1.0M	MPG	500m	12	5.0	.60	3.5	350n				0	7		
4	3349	32	6	SSS	1.0M	MPG	500m	12	5.0	.60	3.5	520n				0	7	F129	
5	AM2812DC	32	8	SSS▼	500k*	MPX		12	5.0	.80	4.0	200n†	1.6m	.40		0	7	PN28v	ML☐
6	AM2812DM	32	8	SSS▼	500k*	MPX		12	5.0	.80	4.0	200n†	1.6m	.40		5	C	PN28v	ML☐
7	AM2812ADC	32	8	SSS▼	1.0M*	MPX		12	5.0	.80	4.0	200n†	1.6m	.40		0	7	PN28v	ML☐
8	AM2812ADM	32	8	SSS▼	1.0M*	MPX		12	5.0	.80	4.0	200n†	1.6m	.40		5	C	PN28v	ML☐
9	AM2813DC	32	9	SSS▼	500k*	MPX		12	5.0	.80	4.0	200n†	1.6m	.40		0	7	PN28w	ML☐
10	AM2813DM	32	9	SSS▼	500k*	MPX		12	5.0	.80	4.0	200n†	1.6m	.40		5	C	PN28w	ML☐
11	AM2813ADC	32	9	SSS▼	1.0M*	MPX		12	5.0	.80	4.0	200n†	1.6m	.40		0	7	PN28w	ML☐
12	AM2813ADM	32	9	SSS▼	1.0M*	MPX		12	5.0	.80	4.0	200n†	1.6m	.40		5	C	PN28w	ML☐
13	FR1502E02	40	9	SSS▼	250k☐Ø	MPX	685m♦	12	5.0	.80	3.5§	500n	1.6m	.40		0	7	F297	ML32a
14	FR1502E01	40	9	SSS▼	500k☐Ø	MPX	685m♦	12	5.0	.80	3.5§	500n	1.6m	.40		0	7	F297	ML32a
15	33512DC	40	9	SSS▼	1.0M	MPG	420m	12	5.0	.80	4.0§		1.6m	.40		0	7	F472	ML192
16	FR1502E	40	9	SSS▼	1.0M☐Ø	MPX	685m♦	12	5.0	.80	3.5§	500n	1.6m	.40		0	7	F297	ML32a
17	33511DC	40	9	SSS▼	2.0M	MPG	520m	12	5.0	.80	4.0§		1.6m	.40		0	7	F472	ML192
18#	RC2004K	50	2	SSS	1.0M	MPG		28	0.0	-2.0	-1.0	450n				5	8	F48	CY7
19	S2004K	50	2	SSS	1.0M	MPG		28	0.0	-2.0	-10	450n				5	8	F48	CY7
20▼#	HD21S145	64	1	PPS		BEX		4.5	0.0	1.81*	.88#					0	8	F568	
21▼#	HD10145	64	1	PPS		BEX		5.2	0.0	1.58%*	.81#					3	8	F567	
22	4557BDC	64☐	1	SSS		MCX	400m☐	0.0	15	4.0	11		4.5m	1.5		4	8	PN16fg	ML157e
23	4557BDM	64☐	1	SSS		MCX	400m☐	0.0	15	4.0	11		4.5m	1.5		5	C	PN16fg	ML157e
24	4557BFC	64☐	1	SSS		MCX	400m☐	0.0	15	4.0	11		4.5m	1.5		4	8	PN16fg	FL14j
25	4557BFM	64☐	1	SSS		MCX	400m☐	0.0	15	4.0	11		4.5m	1.5		5	C	PN16fg	FL14j
26	4557BPC	64☐	1	SSS		MCX	400m☐	0.0	15	4.0	11		4.5m	1.5		4	8	PN16fg	ML170
27#	HEF4031B	64	1	SSS		MCX	400m☐	0.0	10	3.0	7.0		2.0m	.50		4	8	F436	ML☐
28	JANM38510/05705BFA	64	1	SSS	700k	MCX	200m☐	0.0	5.0	.85	3.95	1.5u	900u%	.50		5	C	F253	FL31
29	JANM38510/05705CFA	64	1	SSS	700k	MCX	200m☐	0.0	5.0	.85	3.95	1.5u	900u%	.50		5	C	F253	FL31
30	CD4031AE	64	1	SSS	1.0MØ	MCX	14m♦	0.0	10	.05%	9.95	800nØ	80u	0.5		4	8	F176	MO001AC
31	CD4031AY	64	1	SSS	1.0MØ	MCX	14m♦	0.0	10	.05%	9.95	800nØ	80u	.50		4	8	F176	MO001AC
32#	HBF4031AE	64	1	SSS	1.0MØ	MCX	14m♦	0.0	10	.05%	9.9	800nØ	80u%	9.5		4	8	F176	MO001AC
33#	HBF4031AF	64	1	SSS	1.0MØ	MCX	14m♦	0.0	10	.05%	9.9	800nØ	80u%	9.5		4	8	F176	ML127c
34	CD4031AD	64	1	SSS	2.0MØ	MCX	15m♦	0.0	10	.05%	9.95	400nØ	140u	0.5		5	C	F176	MO001AE
35	CD4031AF	64	1	SSS	2.0MØ	MCX	15m♦	0.0	10	.05%	9.95	400nØ	140u	.50		5	C	F176	MO001AC
36	CD4031AH	64	1	SSS	2.0MØ	MCX	15m♦	0.0	10	.05%	9.95	400nØ	140u	.50		5	C	F176	CH5
37	CD4031AK	64	1	SSS	2.0MØ	MCX	15m♦	0.0	10	.05%	9.95	400nØ	140u	0.5		5	C	F176	MO004AC
38#	HBC4031AD	64	1	SSS	2.0MØ	MCX	15m♦	0.0	10	.05%	9.9	400nØ	140u%	9.5		5	C	F176	ML127c
39#	HBC4031AF	64	1	SSS	2.0MØ	MCX	15m♦	0.0	10	.05%	9.9	400nØ	140u%	9.5		5	C	F176	ML127c
40#	HBC4031AK	64	1	SSS	2.0MØ	MCX	15m♦	0.0	10	.05%	9.9	400nØ	140u%	9.5		5	C	F176	MO004AC
41▼#	HD14557B	64☐	1	SSS	3.3M☐	MCX		0.0	15	4.0	11	363n§				4	8	F299	
42	MC14557BAL	64☐	1	SSS	6.7MØ	MCX	300u♦Ø	0.0	15	4.0	11	300nØ	3.4m	1.5		5	C	F299	ML5
43	MC14557BCL	64☐	1	SSS	6.7MØ	MCX	3.0m♦Ø	0.0	15	4.0	11	300nØ	3.0m	1.5		4	8	F299	ML5
44	MC14557BCP	64☐	1	SSS	6.7MØ	MCX	3.0m♦Ø	0.0	15	4.0	11	300nØ	3.0m	1.5		4	8	F299	ML145
45#	HEF4031P	64	1	SSS	8.0M	MCX	400m☐	0.0	10	3.0	7.0	240n†	1.2m	.50		4	8	F436	ML48e
46	4031BDC	64	1	SSS	9.0MØ†	MCX	9.0m♦	0.0	15	4.0	11	40n†	4.5m	1.5		4	8	F477	ML157e
47	4031BDM	64	1	SSS	9.0MØ†	MCX	9.0m♦	0.0	15	4.0	11	40n†	4.5m	1.5		5	C	F477	ML157e
48	4031BFC	64	1	SSS	9.0MØ†	MCX	9.0m♦	0.0	15	4.0	11	40n†	4.5m	1.5		4	8	F477	FL14j
49	4031BFM	64	1	SSS	9.0MØ†	MCX	9.0m♦	0.0	15	4.0	11	40n†	4.5m	1.5		5	C	F477	FL14j
50	4031BPC	64	1	SSS	9.0MØ†	MCX	9.0m♦	0.0	15	4.0	11	40n†	4.5m	1.5		4	8	F477	ML170
51	CD4031BD	64	1	SSS	16M†	MCX	500m☐	0.0	15	4.0	11	80n†	6.8m†	1.5		5	C	F507	MO001AE
52	CD4031BE	64	1	SSS	16M†	MCX	500m☐	0.0	15	4.0	11	80n†	6.8m†	1.5		4	8	F507	MO001AC
53	CD4031BF	64	1	SSS	16M†	MCX	500m☐	0.0	15	4.0	11	80n†	6.8m†	1.5		5	C	F507	MO001AC
54▼	CD4031BH	64	1	SSS	16M†	MCX	500m	0.0	15	4.0	11	80n†	6.8m†	1.5		5	C	F507	CH18
55#	HCC4031BD	64	1	SSS	16M†	MCX	500m☐	0.0	15	4.0	11	80n†	6.8m†	1.5		5	C	F507	MO001AE
56#	HCC4031BF	64	1	SSS	16M†	MCX	500m☐	0.0	15	4.0	11	80n†	6.8m†	1.5		5	C	F507	MO001AC
57#	HCC4031BK	64	1	SSS	16M†	MCX	500m☐	0.0	15	4.0	11	80n†	6.8m†	1.5		5	C	F507	MO004AC
58#	HCF4031BE	64	1	SSS	16M†	MCX	500m☐	0.0	15	4.0	11	80n†	6.8m†	1.5		4	8	F507	MO001AC
59#	HCF4031BF	64	1	SSS	16M†	MCX	500m☐	0.0	15	4.0	11	80n†	6.8m†	1.5		4	8	F507	MO001AC
60#	HEF4031BD	64	1	SSS	20M†	MCX	3.0m♦	0.0	15	4.0	11	60n	3.0m	1.5		4	8	F494	ML127x
61#	HEF4031BP	64	1	SSS	20M†	MCX	3.0m♦	0.0	15	4.0	11	60n	3.0m	1.5		4	8	F494	ML89j
62▼#	HEF4031BT	64	1	SSS	20M†	MCX	3.0m♦	0.0	15	4.0	11	60n	3.0	1.5		4	8	F494	FL83
63#	HEF4557BD	64☐	1	SSS	20M†	MCX	3.0m♦	0.0	15	4.0	11	60n	3.0m	1.5		4	8	F299	ML127x
64#	HEF4557BP	64☐	1	SSS	20M†	MCX	3.0m♦	0.0	15	4.0	11	60n	3.0m	1.5		4	8	F299	ML89j
65▼#	HEF4557BT	64☐	1	SSS	20M†	MCX	3.0m♦	0.0	15	4.0	11	60n	3.0	1.5		4	8	F299	FL83
66	MS612	64	1	SSS	25M	MCX	10u♦Ø	10	0.0	.01Ø%	9.99	40nØ				5	C	F58	ML☐
67▼#	HD1457B	64	2	SPS	5.3M☐	MCX		0.0	15	4.0	11§	215n				4	8	F248	
68	MC14517BAL	64	2	SSS	5.3MØ	MCX	300u♦Ø	0.0	15	4.0	11§	215nØ	3.4m	1.5		5	C	F248	ML98b
69	MC14517BCL	64	2	SSS	5.3MØ	MCX	3.0m♦Ø	0.0	15	4.0	11§	215nØ	3.0m	1.5		4	8	F248	ML98b
70	MC14517BCP	64	2	SSS	5.3MØ	MCX	3.0m♦Ø	0.0	15	4.0	11§	215nØ	3.0m	1.5		4	8	F248	ML145
71	CD4517BD	64	2	SSS	6.7M		500m	0.5	20#	1.5	3.5	250n	3.4	1.5	6.0M	5	C	F558	MO001AE
72	CD4517BE	64	2	SSS	6.7M		500m	0.5	20#	1.5	3.5	250n	3.4	1.5	6.0M	4	8	F558	MO001AC
73	CD4517BF	64	2	SSS	6.7M		500m	0.5	20#	1.5	3.5	250n	3.4	1.5	6.0M	5	C	F558	MO001AC
74	CD4517BH	64	2	SSS	6.7M		500m	0.5	20#	1.5	3.5	250n	3.4	1.5	6.0M	5	C	F558	MO001AC
75#	HEF4517BD	64	2	SSS	20M†	MCX	3.0m♦	0.0	15	4.0	11	60n	3.0m	1.5		4	8	F498	ML127x
76#	HEF4517BP	64	2	SSS	20M†	MCX	3.0m♦	0.0	15	4.0	11	60n	3.0m	1.5		4	8	F498	ML89j
77	TDC1005J	64	2	SSS	25M	BTX	525m	0.0	5.0	.80	2.0	30n	4.0m	.50		0	7	F549	ML299
78	3333-9-7K	64	3	SSD	1.0MØ	MXX	750m☐	27	0.0	-2.0Ø	-9.0				10kØ	0	7	F75	ML57
79	AM2841DC	64	4	SSD▼		MPS		12	5.0	.80	4.0	200n†	1.6m	.40		0	7	F294	ML127k
80	AM2841DM	64	4	SSD▼		MPS		12	5.0	.80	4.0	200n†	1.6m	.40		5	C	F294	ML62c
81	AM3341DC	64	4	SSD▼		MPS		12	5.0	.80	4.0	250n†	1.6m	.40		0	7	F294	ML127k
82	AM3341DM	64	4	SSD▼		MPS		12	5.0	.80	4.0	250n†	1.6m	.40		5	C		ML62c
83	AM3341PC	64	4	SSD▼		MPS		12	5.0	.80	4.0	250n†	1.6m	.40		0	7		ML89a
84	3342	64	4	SSS	1.5M	MPG	380m	12	5.0	.40	2.4	265n	1.6m	.40		0	7	F119	
85#	GZF1106D	64	4	SSS	2.0M	MCX		0.0	5.0	1.5	3.5	350n	1.6m	.40		4	8	F327	ML134a
86	4731BDC	64	4	SSS	3.0MØ	MCX	15m♦	0.0	10	3.0	7.0	200n	1.2m	.50		4	8	F480	TO116
87	4731BDM	64	4	SSS	3.0MØ	MCX	15m♦	0.0	10	3.0	7.0	200n	1.2m	.50		5	C	F480	TO116
88	4731BFC	64	4	SSS	3.0MØ	MCX	15m♦	0.0	10	3.0	7.0	200n	1.2m	.50		4	8	F480a	FL14j
89	4731BFM	64	4	SSS	3.0MØ	MCX	15m♦	0.0	10	3.0	7.0	200n	1.2m	.50		5	C	F480a	FL14j
90	4731BPC	64	4	SSS	3.0MØ	MCX	15m♦	0.0	10	3.0	7.0	200n	1.2m	.50		4	8	F480	ML261
91#	GZF1106P	64	4	SSS	4.0M	MCX	500u♦	0.0	10	3.0	7.0	175n	1.6m	4.75		4	8	F318	ML☐
92▼	57401J16	64	4	SSS▼	7.0M	BTD	750m	0.0	5.0	.80	2.0	60n	8.0m	.50		5	C	F209	ML280
93▼	67401J16	64	4	SSS▼	10M	BTD	800m	0.0	5.0	.80	2.0	45n	8.0m	.50		0	7	F209	ML280
94#	HEF4731BD	64	4	SSS	20M†	MCX	3.0m♦	0.0	15	4.0	11	60n	3.0m	1.5		4	8	F480	ML93j
95#	HEF4731BP	64	4	SSS	20M†	MCX	3.0m♦	0.0	15	4.0	11	60n	3.0m	1.5		4	8	F480	ML71g
96#	HEF4731VD	64	4	SSS	20M†	MCX	1.0m♦	0.0	10	3.0	7.0	85n	1.1m	.50		4	8	F480	ML93j
97#	HEF4731VP	64	4	SSS	20M†	MCX	1.0m♦	0.0	10	3.0	7.0	85n	1.1m	.50		4	8	F480	ML71g
98▼	67402J18	64	5	SSS▼	15M†	BTD	800m	0.0	5.0	.80	2.0	53n†	8.0m	.50		0	7	F527	ML278
99	3326-4-5E	66	3	SSD	3.0MØ	MPX	180m	13	0.0	-3.0Ø	-9.0	200nØ				5	8	F73	TO100
100	SR5015-80	80☐	4	§	1.0m	MNG	.40	0.0	5.0	.80	3.5				1.0M#	0	7	F561	ML☐
101#	M142A-B1	80	4	SSS	3.0mΔ	MNG	250m†	0.0	5.0	.80	2.0	230n				0	7	F303a	ML302
102#	M142A-D1	80	4	SSS	3.0mΔ	MNG	250m†	0.0	5.0	.80	2.0	230n				0	7	F303a	ML301
103	3347	80	4	SSS	1.5M	MPG	380m	12	5.0	.40	2.4	265n	1.6m	.40		0	7	F303	
104	33572	80	4	SSS	2.0M	MPG	285m	12	5.0	.80	4.0	215n	1.6m	.40		0	7	F303	
105#	M142B1	80	4	SSS	3.0MΔ	MNG	250m†	0.0	5.0	.80	2.0	230n	1.6m	.55		0	7	F303a	ML302
106#	M142D1	80	4	SSS	3.0MΔ	MNG	250m†	0.0	5.0	.80	2.0	230n	1.6m	.55		0	7	F303a	ML301
107	33571	80	4	SSS	4.0M	MPG	375m	12	5.0	.80	4.0	215n	1.6m	.40		0	7	F303	
108	SR5015-81	81	4		1.0m	MNG	.40	0.0	5.0	.80	3.5					0	7	F561	ML☐

SYMBOLS AND CODES EXPLAINED IN INTERPRETER

7. SHIFT REGISTERS

IN ORDER OF(1)No.BITS/REG(2)No.REGISTERS (3)OP.CODE(4)MAX W/C FREQ(5)STRUCT(6)TYPE No

LINE No.	6 TYPE No.	ORGANIZATION 1 BITS PER REGISTER	ORGANIZATION 2 No. REGS	3 OPER. CODE	4 MAX WORST CASE FREQ. (Hz)	5 STRUCTURE CODE	MAX OPER. POWER DISS. (W)	RATED POWER SUP. SPAN NEG. (V)	RATED POWER SUP. SPAN POS. (V)	INPUT LOGIC LEVELS MAX '0' (V)	INPUT LOGIC LEVELS MIN '1' (V)	MAX PROP. DELAY (s)	MIN OUTPUT SINK CURRENT (A)	MIN OUTPUT SINK CURRENT @ OUT (V)	MIN CLOCK FREQ. (Hz)	OPER. TEMP. RANGE CODE -	OPER. TEMP. RANGE CODE +	DRAWINGS LOGIC/ BLOCK	DRAWINGS OUTLINE
1	SR5018	81	4		1.0m	MNG	500m	0.0	5.0	.80	3.5					0	7	F561	ML□
2	1406T	100	2	SSD		MPG	80m♦	5.0	5.0	.80	2.5	100n	200u	.40	1.0M#	5	C		TO99
3	1407T	100	2	SSD		MPG	80m♦	5.0	5.0	.80	2.5	100n	200u	.40	1.0M#	5	C		TO99
4	1506T	100	2	SSD		MPG	80m♦	5.0	5.0	.80	2.5	100n	200u	.40	1.0M#	0	7		TO99
5	1507T	100	2	SSD		MPG	80m♦	5.0	5.0	.80	2.5	100n	200u	.40	1.0M#	0	7		TO99
6	AM1406HM	100	2	SSD	2.0M	MPG	500m□	5.0	5.0	.80	2.5	100n			80	5	C	F256	TO99
7	AM1407HM	100	2	SSD	2.0M	MPG	500m□	5.0	5.0	.80	2.5	100n	200u	.40	80	5	C	F256	TO99
8	AM1506HC	100	2	SSD	2.0M	MPG	500m□	5.0	5.0	.80	2.5	100n			80	0	7	F256	TO99
9	AM1507HC	100	2	SSD	2.0M	MPG	500m□	5.0	5.0	.80	2.5	100n	200u	.40	80	0	7	F256	TO99
10	M1406	100	2	SSD	2.0M□	MPG	110m	5.0	5.0	.80	3.5	100n	1.6m	.40	6.0k	5	C	PN8f	CY4a
11	M1407	100	2	SSD	2.0M□	MPG	110m	5.0	5.0	.80	3.5	100n	1.6m	.40	6.0k	5	C	PN8f	CY4a
12	M1506	100	2	SSD	2.0M□	MPG	110m	5.0	5.0	.80	3.5	100n	1.6m	.40	6.0k	0	7	PN8f	CY4a
13	M1507	100	2	SSD	2.0M□	MPG	110m	5.0	5.0	.80	3.5	100n	1.6m	.40	6.0k	0	7	PN8f	CY4a
14#	RC2005K	100	2	SSS	1.0M	MPG		28	0.0	-2.0	-1.0	450n				5	8	F48	CY7
15	S2005K	100	2	SSS	1.0M	MPG		28	0.0	-2.0	-10	450n				5	8	F48	CY7
16	3307-4-5F	100	2	SSS	1.0M	MPX	350mØ□	27	0.0	-2.0	-9.0	450n				5	8	F3b	TO100
17	SL7-C2100-30	100	2	SSS	2.0M	MPN	350m†Ø	12	5.0	.80	3.5	200n†	1.6m	.40		0	7	F25f	ML64
18	N2010K	100	2	SSS	3.0M	MPX		2.8	0.0	-1.0	-8.0	250nØ				0	7	F48	CY7
19▼#	HD14562B	128	1	SPS	2.0M□	MCX		0.0	15	4.0	11	500n				4	8	F275	
20	MC14562BAL	128	1	SSS	4.0MØ	MCX	300u♦Ø	0.0	15	4.0	11	340nØ	3.4m	1.5		5	C	F275	TO116
21	MC14562BCL	128	1	SSS	4.0MØ	MCX	3.0m♦Ø	0.0	15	4.0	11	340nØ	3.0m	1.5		4	8	F275	TO116
22	MC14562BCP	128	1	SSS	4.0MØ	MCX	3.0m♦Ø	0.0	15	4.0	11	340nØ	3.0m	1.5		4	8	F275	ML124
23	MS625	128	1	SSS	5.0M	MCX	10u♦	0.0	12	2.0	8.0	200n				5	C	F165	CH□
24	MC14562CL	128	1	SSS	5.6MΔØ	MCX	14m♦	0.0	10	.05%	9.95	660nØ	600u	.50		4	8	F275	ML66
25	MC14562CP	128	1	SSS	5.6MΔØ	MCX	14m♦	0.0	10	.05%	9.95	660nØ	600u	.50		4	8	F275	ML124
26	MK1002L	128	2	SSS	1.0M*	MPI	245m♦	12	5.0	1.0	4.0	450n	1.6m	.40		0	7	F290	TO100
27	MK1002P	128	2	SSS	1.0M*	MPI	355m♦	12	5.0	1.0	4.0	450n	1.6m	.40		0	7	F290a	ML127k
28	AM2809HM	128	2	SSS	2.0MΔ	MPG	528m♦	12	5.0	1.1	3.3	350n	1.6m	.40		5	C	F289	TO99
29	AM2810DC	128	2	SSS	2.0M*	MPG	245m♦	12	5.0	1.0	4.0	250n	1.6m	.40		0	7	F290a	ML127k
30	AM2810DM	128	2	SSS	2.0M*	MPG	355m♦	12	5.0	1.0	4.0	250n	1.6m	.40		5	C	F290a	ML62c
31	TMS3114JC	128Δ	2	SSS	2.0M	MPT	360m†	12	5.0	.60	3.5	350n	1.6m	.50		2	8	F115	ML82
32	TMS3114NC	128Δ	2	SSS	2.0M	MPT	360m†	12	5.0	.60	3.5	350n	1.6m	.50		2	8	F115	ML48a
33	AM2809HC	128	2	SSS	2.5MΔ	MPG	456m♦	12	5.0	1.1	3.3	300n	1.6m	.40		0	7	F289	TO99
34	AM2809PC	128	2	SSS	2.5MΔ	MPG	456m♦	12	5.0	1.1	3.3	300n	1.6m	.40		0	7	F289	ML163
35	AM2814DC	128	2	SSS	2.5MΔ*	MPG	255m♦	13	5.0	.60	3.5	250n	1.6m	.40		2	8	F291	ML62c
36	AM2814DM	128	2	SSS	2.5MΔ*	MPG	364m♦	12.6	5.0	.60	3.5	250n	1.6m	.40		5	C	F291	ML62c
37	AM2814PC	128	2	SSS	2.5MΔ*	MPG	255m♦	13	5.0	.60	3.5	250n	1.6m	.40		2	8	F291	ML89a
38	MM4055D	128	4	SSS	1.0MΔ	MPG	163mØ	12	5.0	.80	4.0	700n	1.6m	.40		5	C	F340	ML177
39	MM5055D	128	4	SSS	1.0MΔ	MPG	163mØ	12	5.0	.80	3.5	345n	1.6m	.40		0	7	F340	ML177
40	MM5055N	128	4	SSS	1.0MΔ	MPG	163mØ	12	5.0	.80	3.5	345n	1.6m	.40		0	7	F340	ML178
41	AM2855DC	128	4	SSS	2.5M	MPG		12	5.0	.80	4.0	280n	1.6m	.40		0	7	F292	ML127k
42	AM2855DM	128	4	SSS	2.5M	MPG		12	5.0	.80	4.0	280n	1.6m	.40		5	C	F292	ML62c
43	AM2855PC	128	4	SSS	2.5M	MPG		12	5.0	.80	4.0	280n	1.6m	.40		0	7	F292	ML89a
44	SR5015-133	133	4		1.0m	MNG	.40	0.0	5.0	.80	3.5					0	7	F561	ML□
45	SR5017	133	4		1.0m	MNG	500m	0.0	5.0	.80	3.5					0	7	F561	ML□
46	CD4062AH	200	1	SSD	2.0MΔ†	MCX	15m♦	0.0	10	.05%	9.95	800n	3.2m	.50	150	5	C	F262	CH10
47	CD4062AK	200	1	SSD	2.0MΔ†	MCX	15m♦	0.0	10	.05%	9.95	800n	3.2m	.50	150	5	C	F262	MO002AC
48	CD4062AT	200	1	SSD	2.0MΔ†	MCX	15m♦	0.0	10	.05%	9.95	800n	3.2m	.50	150	5	C	F262	MO006AC
49#	HBC4062AK	200	1	SSD	2.0MΔ†	MCX	15m♦	0.0	10	.05%	9.95	800n	3.2m	.50	150	5	C	F262	FL31
50#	HBF4062AE	200	1	SSD	2.0MΔ†	MCX	15m♦	0.0	10	.05%	9.95	800n	3.2m	.50	150	4	8	F262	ML236
51	2529V	240	2	SSS	1.5MΔØ	MPG		5.0	0.0									PN8m	ML163
52	3383-9-5F	256	1	SSD	2.0MØ	MPG	155mØ	12	5.0	.85	4.0	150n	1.6m	.40	10k	0	7	F76	TO100
53	TDC1006J	256	1	SSS	25M	BTX	675m	0.0	5.0	.80	2.0	30n	4.0m	.50		0	7	F550	ML299
54	2529N	256	2	SSS	1.5MΔ	MPG	535m□	12	5.0	.60	3.4	450n	1.6m	.50		0	7	F130	ML163b
55	AM2856HC	256	2	SSS	2.5M	MPG		12	5.0	.80	4.0	280n	1.6m	.40		0	7	F292a	TO100
56	AM2856HM	256	2	SSS	2.5M	MPG		12	5.0	.80	4.0	280n	1.6m	.40		5	C	F292a	TO100
57	1402AB	256	4	SSD	2.5MΔØ	MPX		5.0	0.0			10u*						PN16da	ML85
58	1402AI	256	4	SSD	2.5MΔØ	MPX		5.0	0.0			10u*						PN16da	ML107a
59	AM1402A59F#2	256	4	SSD	3.0M	MPG	200m♦	9.0	5.0	-10	-2.0	110n	1.6m	.50	1.5M#	0	7	F120b	FL33a
60	AM1402A#2	256	4	SSD	3.0M□	MPG	600m□	9.0	5.0	.80	3.0	110n	1.6m	.50	1.5M#	0	7	F120b	ML127k
61	AM1402ADM#2	256	4	SSD	3.0M□	MPG	600m□	9.0	5.0	.80	3.0	110n	1.6m	.50	100	5	C	F120b	ML62c
62	AM1402APC#2	256	4	SSD	3.0M□	MPG	600m□	9.0	5.0	.80	3.0	110n	1.6m	.50	100	0	7	F120b	ML89a
63	1402A	256	4	SSD	5.0M	MPG	500m	5.0	5.0	.50	2.4	100n	1.6m	.50		5	C		MO□
64	AM1402A#1	256	4	SSD	5.0M□	MPG	600m□	5.0	5.0	.80	3.0	90n	1.6m	.50	2.5M#	0	7	F120b	ML127k
65	AM1402ADM#1	256	4	SSD	5.0M□	MPG	600m□	5.0	5.0	.80	3.0	90n	1.6m	.50	100	5	C	F120b	ML62c
66	AM1402APC#1	256	4	SSD	5.0M□	MPG	600m□	5.0	5.0	.80	3.0	90n	1.6m	.50	100	0	7	F120b	ML89a
67	DL9-1402A26#1	256	4	SSD	5.0M	MPG	525mØ	5.0	5.0	.80	3.0	90n	1.6m	.50	10k	0	7	F120	ML□
68	AM1402A51E	256	4	SSD	10M	MPG	250m♦	5.0	5.0	-10	-2.0	90n	1.6m	.50	2.5M#	5	C	F120b	ML107
69	AM1402A51F	256	4	SSD	10M	MPG	250m♦	5.0	5.0	-10	-2.0	90n	1.6m	.50	2.5M#	5	C	F120b	FL33a
70	AM1402A59F#1	256	4	SSD	10M	MPG	250m♦	5.0	5.0	-10	-2.0	90n	1.6m	.50	2.5M#	0	7	F120b	FL33a
71	AM2802DC	256	4	SSD	10M□	MPG	600m□	5.0	5.0	.80	3.0	90n	1.6m	.50	100	0	7	F120b	ML127k
72	AM2802DM	256	4	SSD	10M□	MPG	600m□	5.0	5.0	.80	3.0	90n	1.6m	.50	100	5	C	F120b	ML62c
73	AM2802PC	256	4	SSD	10M□	MPG	600m□	5.0	5.0	.80	3.0	90n	1.6m	.50	100	0	7	F120b	ML89a
74	MM4056H	256	4	SSS	1.0MΔ	MPG	163mØ	12	5.0	.80	4.0	700n	1.6m	.40		5	C	F340c	TO100
75	MM5056H	256	4	SSS	1.0MΔ	MPG	163mØ	12	5.0	.80	3.5	345n	1.6m	.40		0	7	F340c	TO100
76	3330-9-5F	480	1	SSD	2.0M	MPG	250m	0.0	5.0	.85	4.0	150n	1.6m	.40	10k	0	7	F74	TO100
77	3331-9-5F	500	1	SSD	2.0M	MPG	250m	0.0	5.0	.85	4.0	150n	1.6m	.40	10k	0	7	F74	TO100
78	3329-9-5F	512	1	SSD	2.0M	MPG	250m	0.0	5.0	.85	4.0	150n	1.6m	.40	10k	0	7	F74	TO100
79	1405K	512	1	SSD	2.0MΔØ	MPX		5.0	0.0			30u*						F401	CY7c
80	2505K	512	1	SSD	2.5MØ	MPG	535m□	5.0	5.0	1.0	3.2	100nØ			500 Ø	0	7	F30	CY7
81	AM2805HM	512	1	SSD	3.0MΔ	MPG	60m♦	5.0	5.0	.80	3.0	5.0n*	1.0uΔ			5	C	F288	TO100
82	2524N	512	1	SSD	3.0MΔ	MPX	535m□	5.0	5.0	.60	3.4	100n	1.6m	1.0		0	7	F546	ML163b
83	1405A	512	1	SSD	4.0MΔ	MPG	60m♦	5.0	5.0	.80	3.0	5.0n*	1.0uΔ	.40	400	0	7		TO100
84	AM2805HC	512	1	SSD	4.0MΔ	MPG	60m♦	5.0	5.0	.80	3.0	5.0n*	1.0uΔ			0	7	F288	TO100
85	AM2807PC	512	1	SSD	4.0MΔ	MPG	60m♦	5.0	5.0	.80	3.0	5.0n*	1.0uΔ			0	7	F288b	ML163
86	MM4057D	512	1	SSS	1.0MΔ	MPG	163mØ	12	5.0	.80	4.0	700n	1.6m	.40		5	C	F340b	ML202
87	MM5057D	512	1	SSS	1.0MΔ	MPG	163mØ	12	5.0	.80	3.5	345n	1.6m	.40		0	7	F340b	ML202
88	MM5057N	512	1	SSS	1.0MΔ	MPG	163mØ	12	5.0	.80	3.5	345n	1.6m	.40		0	7	F340b	ML116b
89	AM2857DC	512	1	SSS	2.5M	MPG		12	5.0	.80	4.0	280n	1.6m	.40		0	7	F292b	ML164
90	AM2857DM	512	1	SSS	2.5M	MPG		12	5.0	.80	4.0	280n	1.6m	.40		5	C	F292b	ML164
91	AM2857PC	512	1	SSS	2.5M	MPG		12	5.0	.80	4.0	280n	1.6m	.40		0	7	F292b	ML163
92	1403ATA	512	2	SSD	2.5MΔØ	MPX		5.0	0.0			10u*						PN8d	CY4c
93	1403AV	512	2	SSD	2.5MΔØ	MPX		5.0	0.0			10u*						PN8d	ML163
94	AM1403A59F#2	512	2	SSD	3.0M	MPG	200m♦	9.0	5.0	-10	-2.0	110n	1.6m	.50	1.5M#	0	7	F120a	FL33a
95	AM1403A#2	512	2	SSD	3.0M□	MPG	600m□	9.0	5.0	.80	3.0	110n	1.6m	.50	1.5M#	0	7	F120a	TO99
96	AM1403AHM#2	512	2	SSD	3.0M□	MPG	600m□	9.0	5.0	.80	3.0	110n	1.6m	.50	100	5	C	F120a	TO99
97	AM1403APC#2	512	2	SSD	3.0M□	MPG	600m□	9.0	5.0	.80	3.0	110n	1.6m	.50	100	0	7	F120a	ML89a
98	1403A	512	2	SSD	5.0M	MPG	500m	5.0	5.0	.50	2.4	100n	1.6m	.50		5	C		CY□
99	AM1403A#1	512	2	SSD	5.0M□	MPG	600m□	5.0	5.0	.80	3.0	90n	1.6m	.50	2.5M#	0	7	F120a	TO99
100	AM1403AHM#1	512	2	SSD	5.0M□	MPG	600m□	5.0	5.0	.80	3.0	90n	1.6m	.50	100	5	C	F120a	TO99
101	AM1403APC#1	512	2	SSD	5.0M□	MPG	600m□	5.0	5.0	.80	3.0	90n	1.6m	.50	100	0	7	F120a	ML89a
102	2503V	512	2	SSD	8.0MØ	MPG	535m□	5.0	5.0	.60	3.4	90nØ			500 Ø	0	7	F29a	ML87
103	AM1403A51F	512	2	SSD	10M	MPG	250m♦	5.0	5.0	-10	-2.0	90n	1.6m	.50	2.5M#	5	C	F120a	FL33a
104	AM1403A51T	512	2	SSD	10M	MPG	250m♦	5.0	5.0	-10	-2.0	90n	1.6m	.50	2.5M#	5	C	F120a	TO99
105	AM1403A59F#1	512	2	SSD	10M	MPG	250m♦	5.0	5.0	-10	-2.0	90n	1.6m	.50	2.5M#	0	7	F120a	FL33a
106	AM2803HC	512	2	SSD	10M□	MPG	600m□	5.0	5.0	.80	3.0	90n	1.6m	.50	100	0	7	F120a	TO99
107	AM2803HM	512	2	SSD	10M□	MPG	600m□	5.0	5.0	.80	3.0	90n	1.6m	.50	100	5	C	F120a	TO99
108	AM2803PC	512	2	SSD	10M□	MPG	600m□	5.0	5.0	.80	3.0	90n	1.6m	.50	100	0	7	F120a	ML163
109	1404ATA	1024	1	SSD	2.5MΔØ	MPX		5.0	0.0			10u*						PN8e	CY4c
110	1404AV	1024	1	SSD	2.5MΔØ	MPX		5.0	0.0			10u*						PN8k	ML163

SYMBOLS AND CODES EXPLAINED IN INTERPRETER

7. SHIFT REGISTERS

IN ORDER OF(1)No.BITS/REG(2)No.REGISTERS (3)OP.CODE(4)MAX W/C FREQ(5)STRUCT(6)TYPE No

LINE No.	6 TYPE No.	ORGANIZATION 1 BITS PER REGISTER	ORGANIZATION 2 No. REGS	3 OPER. CODE	4 MAX WORST CASE FREQ. (Hz)	5 STRUC TURE CODE	MAX OPER. POWER DISS. (W)	RATED POWER SUP. SPAN NEG. (V)	RATED POWER SUP. SPAN POS. (V)	INPUT LOGIC LEVELS MAX '0' (V)	INPUT LOGIC LEVELS MIN '1' (V)	MAX PROP. DELAY (s)	MIN OUTPUT SINK CURRENT (A)	MIN OUTPUT SINK CURRENT @ OUT (V)	MIN CLOCK FREQ. (Hz)	OPER. TEMP. RANGE CODE -	OPER. TEMP. RANGE CODE +	DRAWINGS LOGIC/ BLOCK	DRAWINGS OUTLINE
1	AM1404A59F#2	1024	1	SSD	3.0M	MPG	200m♦	9.0	5.0	-10	-2.0	110n	1.6m	.50	1.5M#	0	7	F120b	FL33
2	AM1404A#2	1024	1	SSD	3.0M☑	MPG	600m☑	9.0	5.0	.80	3.0	110n	1.6m	.50	1.5M#	0	7	F120b	TO99
3	AM1404AHM#2	1024	1	SSD	3.0M☑	MPG	600m☑	9.0	5.0	.80	3.0	110n	1.6m	.50	100	5	C	F120b	TO99
4	AM1404APC#2	1024	1	SSD	3.0M☑	MPG	600m☑	9.0	5.0	.80	3.0	110n	1.6m	.50	100	0	7	F120b	ML89a
5	AM2806HM	1024	1	SSD	3.0M△	MPG	100m♦	5.0	5.0	.80	3.0	5.0n*	1.0u△		400	5	C	F288a	TO100
6	AM2806HC	1024	1	SSD	4.0M△	MPG	100m♦	5.0	5.0	.80	3.0	5.0n*	1.0u△		400	0	7	F288a	TO100
7	AM2808PC	1024	1	SSD	4.0M△	MPG	100m♦	5.0	5.0	.80	3.0	5.0n*	1.0u△			0	7	F288c	ML163
8	1404A	1024	1	SSD	5.0M	MPG	500m	5.0	5.0	.50	2.4	100n	1.6m	.50		5	C		CY☑
9	AM1404A#1	1024	1	SSD	5.0M☑	MPG	600m☑	5.0	5.0	.80	3.0	90n	1.6m	.50	2.5M#	0	7	F120b	TO99
10	AM1404AHM#1	1024	1	SSD	5.0M☑	MPG	600m☑	5.0	5.0	.80	3.0	90n	1.6m	.50	100	5	C	F120b	TO99
11	AM1404APC#1	1024	1	SSD	5.0M☑	MPG	600m☑	5.0	5.0	.80	3.0	90n	1.6m	.50	100	0	7	F120b	ML89a
12	AM1404A51F	1024	1	SSD	10M	MPG	250m♦	5.0	5.0	-10	-2.0	90n	1.6m	.50	2.5M#	5	C	F120b	FL33a
13	AM1404A51T	1024	1	SSD	10M	MPG	250m♦	5.0	5.0	-10	-2.0	90n	1.6m	.50	2.5M#	5	C	F120b	TO99
14	AM1404A59F#1	1024	1	SSD	10M	MPG	250m♦	5.0	5.0	-10	-2.0	90n	1.6m	.50	2.5M#	0	7	F120b	FL33a
15	AM2804HC	1024	1	SSD	10M☑	MPG	600m☑	5.0	5.0	.80	3.0	90n	1.6m	.50	100	0	7	F120b	TO99
16	AM2804HM	1024	1	SSD	10M☑	MPG	600m☑	5.0	5.0	.80	3.0	90n	1.6m	.50	100	5	C	F120b	TO99
17	AM2804PC	1024	1	SSD	10M☑	MPG	600m☑	5.0	5.0	.80	3.0	90n	1.6m	.50	100	0	7	F120b	ML163
18	AM2833DC	1024	1	SSS	2.0M△	MPG	175m♦	12	5.0	.80	2.0	300n	1.6m	.40		0	7	F287	ML164
19	AM2833DM	1024	1	SSS	2.0M△	MPG	210m♦	12	5.0	.80	2.0	300n	1.6m	.40		5	C	F287	ML164
20	AM2833PC	1024	1	SSS	2.0M△	MPG	175m♦	12	5.0	.80	2.0	300n	1.6m	.40		0	7	F287	ML163
21	AM3355DC	1024	1	SSS	4.0M	MPG		12	5.0	.40%	4.0	215m	1.6m	.40		0	7	F287	ML164
22	AM3355PC	1024	1	SSS	4.0M	MPG		12	5.0	.40%	4.0	215m	1.6m	.40		0	7	F287	ML163
23	C2401	1024	2	SSD	1.0k☑*	MNG	1.0 ☑	0.0	5.0	.65	2.2		5.0m	.45		0	7	F106	ML10c
24	P2401	1024	2	SSD	1.0k☑*	MNG	1.0 ☑	0.0	5.0	.65	2.2	500n	6.3m	.45	25k	0	7	F106	ML89a
25	AM9401DC	1024	2	SSD	2.0M	MNG	315m	0.0	5.0	.65	2.2	320n	1.6m	.45	25k	0	7	F106	ML127k
26	AM9401DM	1024	2	SSD	2.0M	MNG	315m	0.0	5.0	.65	2.2	320n	1.6m	.45	25k	5	C	F106	ML62c
27	AM9401PC	1024	2	SSD	2.0M	MNG	315m	0.0	5.0	.65	2.2	320n	1.6m	.45	25k	0	7	F106	ML89a

20. SPECIAL MEMORY DEVICES

IN ORDER OF: (1)FUNCT CODE (2)NO. WORDS (3)BITS/WD (4)OP MODE (5)STRUCT &(6)TYPE NO.

LINE No.	6 TYPE No.	1 ORGANIZATION FUNCT -ION CODE	2 No. WORDS	3 BITS per WORD	4 OP MODE PROG CODE	5 STRUC -TURE CODE	MAX. ACCES TIME (S)	MAX. OPER. PWR. DISS. (W)	RATED PWR. SUPPLY SPAN NEG. (V)	RATED PWR. SUPPLY SPAN POS. (V)	INPUT LOGIC LEVELS MAX. '0' (V)	INPUT LOGIC LEVELS MIN. '1' (V)	MIN. OUTPUT SINK CURRENT (A)	OUTPUT VOLT (V)	OUTPUT TEMP. RNG. CODE -	OUTPUT TEMP. RNG. CODE +	GENERAL DESCRIPT -ION	DRAWINGS LOGIC/ BLOCK	DRAWINGS OUT -LINE
1	N8220B	CAM	4	2	SW	BTX	65n	590m	0.0	5.0	.80	2.0	30m	.40	0	7		Z21	ML132
2	F100142DC	CAM	4	4	SW	BEX	2.7n†	1.3	4.5	0.0	-1.4	-1.1			0	8		Z30	ML133h
3	F100142FC	CAM	4	4	SW	BEX	2.7n†	1.3	4.5	0.0	-1.4	-1.1			0	8		Z30a	FL48
4	10155F	CAM	8	2	SW	BEX	17n	754m	5.2	0.0	-1.8%	-.96			3	8		Z53	ML165a
5	10155N	CAM	8	2	SW	BEX	17n	754m	5.2	0.0	-1.8%	-.96			3	8		Z53	ML291
6#	GXB10155	CAM	8	2	SW	BEX	17n	728mØ	5.2	0.0	-1.4	-1.1	40mØ		3	8		Z33	
7	CCD450ADC	CCD	1024	9	C	MNG	140n	250m†	2.5	12	.80	2.2§	2.0m	.40	0	5	9 Reg	Z57	ML134c
8	CCD450DC	CCD	1024	9	C	MNG	180n	250m†	2.5	12	.80	2.2§	2.0m	.40	0	5	9 Reg	Z57	ML134c
9	TIB0203	MBM	144Δ	641Δ	SX		7.5u	700m†		12Δ					0	5	50kb/s	Z59	ML356
10	7110	MBM	256Δ	4K	S										0	5	CAP1MBit		
11	7110-1	MBM	256Δ	4K	S										0	7	CAP1MBit		
12	7110-2	MBM	256Δ	4K	S										1	5	CAP1MBit		
13	7110-3	MBM	256Δ	4K	S										1	3	CAP1MBit		
14	RBM256	MBM	260Δ	1kΔ	SX		4.0m	1.0 †		16Δ					1	7	260kmin	Z54	ML298
15▼	FBM43DA	MBM	64000	1	S		370m†	500m†							0	5		Z67	ML427
16▼	FBM31DB	MBM	256000	1	S		6.0m†	700m†							0	5		Z68	ML428
17▼	RCD10241	MBS			S					5.0					0	7	COIL DR		Z71
18▼	RPD10241	MBS			S				0.0	5.0					0	7	Predrive		Z71a
19▼	RFD10241	MBS			S	BXX			0.0	5.0	2.0	.80	8.0m		0	7	Fun Dr		Z72
20▼	RSA10241	MBS			S	BXX			0.0	5.0	2.0	.80			0	7	SENS AMP		Z70
21▼	RCT10241	MBS			S	MNX		1.0	0.0	5.0					0	7	CONTROL	ML438	Z69
22▼	SN54LS610J	MCT	16	12	SC	BTD			0.0	5.0	.70	2.0§	12m#	.40	5	C		Z74	ML14a
23▼	SN54LS611J	MCT	16	12	SC	BTD			0.0	5.0	.70	2.0Δ	12m#	.40	5	C		Z74	ML14a
24▼	SN54LS612J	MCT	16	12	SC	BTD			0.0	5.0	.70	2.0§	12m#	.40	5	C		Z74	ML14a
25▼	SN54LS613J	MCT	16	12	SC	BTD			0.0	5.0	.70	2.0Δ	12m#	.40	5	C		Z74	ML14a
26▼	SN74LS610J	MCT	16	12	SC	BTD			0.0	5.0	.80	2.0§	24m#	.50	0	7		Z74	ML14a
27▼	SN74LS610N	MCT	16	12	SC	BTD			0.0	5.0	.80	2.0§	24m#	.50	0	7		Z74	ML443
28▼	SN74LS611J	MCT	16	12	SC	BTD			0.0	5.0	.80	2.0Δ	24m#	.50	0	7		Z74	ML14a
29▼	SN74LS611N	MCT	16	12	SC	BTD			0.0	5.0	.80	2.0Δ	24m#	.50	0	7		Z74	ML443
30▼	SN74LS612J	MCT	16	12	SC	BTD			0.0	5.0	.80	2.0§	24m#	.50	0	7		Z74	ML14a
31▼	SN74LS612N	MCT	16	12	SC	BTD			0.0	5.0	.80	2.0§	24m#	.50	0	7		Z74	ML443
32▼	SN74LS613J	MCT	16	12	SC	BTD			0.0	5.0	.80	2.0Δ	24m#	.50	0	7		Z74	ML14a
33▼	SN74LS613N	MCT	16	12	SC	BTD			0.0	5.0	.80	2.0Δ	24m#	.50	0	7		Z74	ML443
34♦	N82S102I	PGA	1	9	SE	BTX	30n	600m†	0.0	5.0	.85	2.0Δ	9.6m	.45	0	7	16 VAR	Z63	ML218b
35	N82S102N	PGA	1	9	SE	BTX	30n	600m†	0.0	5.0	.85	2.0Δ	9.6m	.45	0	7	16 VAR	Z63	ML290
36♦	N82S103I	PGA	1	9	SE	BTX	30n	600m†	0.0	5.0	.85	2.0§	9.6m	.45	0	7	16 VAR	Z63	ML218b
37	N82S103N	PGA	1	9	SE	BTX	30n	600m†	0.0	5.0	.85	2.0§	9.6m	.45	0	7	16 VAR	Z63	ML290
38	S82S102I	PGA	1	9	SE	BTX	55n	900m	0.0	5.0	.80	2.0Δ	9.6m	.50	5	C	16 VAR	Z32	ML218b
39	S82S103I	PGA	1	9	SE	BTX	55n	900m	0.0	5.0	.80	2.0§	9.6m	.50	5	C	16 VAR	Z32	ML218b
40▼	B200	PGA	1	26	SC	MCG		1.0	0.0	5.0			10m#		2	8	SCHOTTKY		
41▼	B500	PGA	1	48	SC	MCG			0.0	5.0			10m#		2	8	SCHOTTKY		
42▼	C2000	PGA	1	72	SC	MCG			0.0	5.0					0	7	CMOS LSI		
43	N82S102F	PGA	1	9	SE	BTX	35n$	600m†	0.0	5.0	0.8	2.0Δ	40uΔ	5.5	0	7	16VAR	Z63	ML411
44	N82S103F	PGA	1	9	SE	BTX	35n$	600m†	0.0	5.0	0.8	2.0§	40uΔ	5.5	0	7	16VAR	Z63	ML411
45#	RC82S102I	PGA	1	9	SE	BTX	55n	900m	0.0	5.0	.80	2.0Δ	9.6m	.50	5	C	16VAR	Z32	ML218b
46#	RC82S102N	PGA	1	9	SE	BTX	50n	600m†	0.0	5.0	.80	2.0Δ	9.6m	.50	5	C	16VAR	Z32	ML199
47#	RC82S103I	PGA	1	9	SE	BTX	55n	900m	0.0	5.0	.80	2.0§	9.6m	.50	5	C	16VAR	Z32	ML218b
48#	RC82S103N	PGA	1	9	SE	BTX	50n	600m†	0.0	5.0	.80	2.0§	9.6m	.50	5	C	16VAR	Z32	ML199
49	PAL10H8CJ	PLA	2	8	SE	BTD	25n$†	275m†	0.0	5.0	.80	2.0§	8.0m	.50	0	7	10 Input	Z37	ML274
50	PAL10H8MJ	PLA	2	8	SE	BTD	25n$†	275m†	0.0	5.0	.80	2.0§	8.0m	.50	5	C	10 Input	Z37	ML274
51 -	PAL10L8CJ	PLA	2	8	SE	BTD	25n$†	275m†	0.0	5.0	.80	2.0§	8.0m	.50	0	7	10 Input	Z42	ML274
52	PAL10L8MJ	PLA	2	8	SE	BTD	25n$†	275m†	0.0	5.0	.80	2.0§	8.0m	.50	5	C	10 Input	Z42	ML274
53	PAL14H4CJ	PLA	4	4	SE	BTD	25n$†	275m†	0.0	5.0	.80	2.0§	8.0m	.50	0	7	14 Input	Z39	ML274
54	PAL14H4MJ	PLA	4	4	SE	BTD	25n$†	275m†	0.0	5.0	.80	2.0§	8.0m	.50	5	C	14 Input	Z39	ML274
55	PAL14L4CJ	PLA	4	4	SE	BTD	25n$†	275m†	0.0	5.0	.80	2.0§	8.0m	.50	0	7	14 Input	Z44	ML274
56	PAL14L4MJ	PLA	4	4	SE	BTD	25n$†	275m†	0.0	5.0	.80	2.0§	8.0m	.50	5	C	14 Input	Z44	ML274
57	PAL12H6CJ	PLA	4	6	SE	BTD	25n$†	275m†	0.0	5.0	.80	2.0§	8.0m	.50	0	7	12 Input	Z38	ML274
58	PAL12H6MJ	PLA	4	6	SE	BTD	25n$†	275m†	0.0	5.0	.80	2.0§	8.0m	.50	5	C	12 Input	Z38	ML274
59	PAL12L6CJ	PLA	4	6	SE	BTD	25n$†	275m†	0.0	5.0	.80	2.0§	8.0m	.50	0	7	12 Input	Z43	ML274
60	PAL12L6MJ	PLA	4	6	SE	BTD	25n$†	275m†	0.0	5.0	.80	2.0§	8.0m	.50	5	C	12 Input	Z43	ML274
61	PAL16H2CJ	PLA	8	2	SE	BTD	25n$†	275m†	0.0	5.0	.80	2.0§	8.0m	.50	0	7	16 Input	Z40	ML274
62	PAL16H2MJ	PLA	8	2	SE	BTD	25n$†	275m†	0.0	5.0	.80	2.0§	8.0m	.50	5	C	16 Input	Z40	ML274
63	PAL16L2CJ	PLA	8	2	SE	BTD	25n$†	275m†	0.0	5.0	.80	2.0§	8.0m	.50	0	7	16 Input	Z45	ML274
64	PAL16L2MJ	PLA	8	2	SE	BTD	25n$†	275m†	0.0	5.0	.80	2.0§	8.0m	.50	5	C	16 Input	Z45	ML274
65	PAL16A4CJ	PLA	8	4	SE	BTD	40n$	800m†	0.0	5.0	.80	2.0§	24m	.50	0	7	16 Input	Z51	ML274
66	PAL16A4MJ	PLA	8	4	SE	BTD	45n$	800m†	0.0	5.0	.80	2.0§	12m	.50	5	C	16 Input	Z51	ML274
67	PAL16R4CJ	PLA	8	4	SE	BTD	40n$	750m†	0.0	5.0	.80	2.0§	24m	.50	0	7	16 Input	Z49	ML274
68	PAL16R4MJ	PLA	8	4	SE	BTD	45n$	750m†	0.0	5.0	.80	2.0§	12m	.50	5	C	16 Input	Z49	ML274
69	PAL16X4CJ	PLA	8	4	SE	BTD	40n$	800m†	0.0	5.0	.80	2.0§	24m	.50	0	7	16 Input	Z50	ML274
70	PAL16X4MJ	PLA	8	4	SE	BTD	45n$	800m†	0.0	5.0	.80	2.0§	12m	.50	5	C	16 Input	Z50	ML274
71	PAL16R6CJ	PLA	8	6	SE	BTD	40n$	750m†	0.0	5.0	.80	2.0§	24m	.50	0	7	16 Input	Z48	ML274
72	PAL16R6MJ	PLA	8	6	SE	BTD	45n$	750m†	0.0	5.0	.80	2.0§	12m	.50	5	C	16 Input	Z48	ML274
73	PAL16L8CJ	PLA	8	8	SE	BTD	40n$	700m†	0.0	5.0	.80	2.0§	24m	.50	0	7	16 Input	Z46	ML274
74	PAL16L8MJ	PLA	8	8	SE	BTD	45n$	700m†	0.0	5.0	.80	2.0§	12m	.50	5	C	16 Input	Z46	ML274
75	PAL16R8CJ	PLA	8	8	SE	BTD	40n$	750m†	0.0	5.0	.80	2.0§	24m	.50	0	7	16 Input	Z47	ML274
76	PAL16R8MJ	PLA	8	8	SE	BTD	45n$	750m†	0.0	5.0	.80	2.0§	12m	.50	5	C	16 Input	Z47	ML274
77	PAL16C1CJ	PLA	16	1	SE	BTD	25n$†	275m†	0.0	5.0	.80	2.0§	8.0m	.50	0	7	16 Input	Z41	ML274
78	PAL16C1MJ	PLA	16	1	SE	BTD	25n$†	275m†	0.0	5.0	.80	2.0§	8.0m	.50	5	C	16 Input	Z41	ML274
79	IM5200CJG	PLA	48	8	SE	BDX	100n$	675m♦†	0.0	5.0	.80	2.0	50uΔ#	5.5	0	7		Z4	ML188
80	93458DC	PLA	48	8	SE	BTD	25nΔ†		0.0	5.0	.80	2.0Δ	16m	.45	0	7	16 VAR	Z28	ML192a
81	93458DM	PLA	48	8	SE	BTD	25nΔ†		0.0	5.0	.80	2.0Δ	16m	.45	5	C	16 VAR	Z28	ML192a
82	93459DC	PLA	48	8	SE	BTD	25nΔ†		0.0	5.0	.80	2.0§	16m	.45	0	7	16 VAR	Z28	ML192a
83	93459DM	PLA	48	8	SE	BTD	25nΔ†		0.0	5.0	.80	2.0§	16m	.45	5	C	16 VAR	Z28	ML192a
84	MC29100LC	PLA	48	8	SE	BTX	50n	600m†	0.0	5.0	.80	2.0§			0	7	16 VAR	Z24	ML316
85	MC29100LM	PLA	48	8	SE	BTX	50n	600m†	0.0	5.0	.80	2.0§			5	C	16 VAR	Z24	ML316
86	MC29101LC	PLA	48	8	SE	BTX	50n	600m†	0.0	5.0	.80	2.0Δ			0	7	16 VAR	Z24	ML316
87	MC29101LM	PLA	48	8	SE	BTX	50n	600m†	0.0	5.0	.80	2.0Δ			5	C	16 VAR	Z24	ML316
88	MC82100LC	PLA	48	8	SE	BTX	50n	600m†	0.0	5.0	.80	2.0§			0	7	16 VAR	Z24	ML316
89	MC82100LM	PLA	48	8	SE	BTX	50n	600m†	0.0	5.0	.80	2.0§			5	C	16 VAR	Z24	ML316
90	MC82101LC	PLA	48	8	SE	BTX	50n	600m†	0.0	5.0	.80	2.0Δ			0	7	16 VAR	Z24	ML316
91	MC82101LM	PLA	48	8	SE	BTX	50n	600m†	0.0	5.0	.80	2.0Δ			5	C	16 VAR	Z24	ML316
92	N82S100I	PLA	48	8	SE	BTX	50n	850m	0.0	5.0	.85	2.0§	9.6m	.45	0	7	16 VAR	Z61	ML218b
93	N82S100N	PLA	48	8	SE	BTX	50n	850m	0.0	5.0	.85	2.0§	9.6m	.45	0	7	16 VAR	Z61	ML290
94♦	N82S101I	PLA	48	8	SE	BTX	50n	850m	0.0	5.0	.85	2.0Δ	9.6m	.45	0	7	16 VAR	Z61	ML218b
95	N82S101N	PLA	48	8	SE	BTX	50n	850m	0.0	5.0	.85	2.0Δ	9.6m	.45	0	7	16 VAR	Z61	ML290
96	S82S100I	PLA	48	8	SE	BTX	80n	900m	0.0	5.0	.80	2.0§	9.6m	.50	5	C	16 VAR	Z61	ML218b
97	S82S101I	PLA	48	8	SE	BTX	80n	900m	0.0	5.0	.80	2.0Δ	9.6m	.50	5	C	16 VAR	Z61	ML218b
98	N82S100F	PLA	48	8	SE	BTX	50n	600m†	0.0	5.0	0.8	2.0§	40uΔ	5.5	0	7	16VAR	Z61	ML411
99	N82S101F	PLA	48	8	SE	BTX	50n	600m†	0.0	5.0	0.8	2.0Δ	40uΔ	5.5	0	7	16VAR	Z61	ML411
100	N82S104N	PLA	48	8	SE	BTX	80n	850m	0.0	5.0	.85	2.0Δ	9.6m	.45	0	7	16VAR	Z65	ML199
101	N82S105N	PLA	48	8	SE	BTX	80n	850m	0.0	5.0	.85	2.0§	9.6m	.45	0	7	16VAR	Z65	ML199
102#	RC82S100I	PLA	48	8	SE	BTX	80n	900m	0.0	5.0	.80	2.0§	9.6m	.50	5	C	16VAR	Z61	ML218b
103#	RC82S100N	PLA	48	8	SE	BTX	80n	900m	0.0	5.0	.80	2.0§	9.6m	.50	5	C	16VAR	Z61	ML199
104#	RC82S101I	PLA	48	8	SE	BTX	80n	900m	0.0	5.0	.80	2.0Δ	9.6m	.50	5	C	16VAR	Z61	ML218b
105♦#	RC82S101N	PLA	48	8	SE	BTX	80n	900m	0.0	5.0	.80	2.0Δ	9.6m	.50	5	C	16VAR	Z61	ML199
106	S82S104I	PLA	48	8	SE	BTX	80n	900m	0.0	5.0	.80	2.0Δ	9.6m	.50	5	C	16VAR	Z24	ML199
107	S82S105I	PLA	48	8	SE	BTX	80n	900m	0.0	5.0	.80	2.0§	9.6m	.50	5	C	16VAR	Z24	ML199
108	SN54S330J	PLA	50	6	SE	BTD	35nt$	550m†Ø	0.0	5.0	.80	2.0§	20m	.50	5	C	12 VAR	Z25	ML213
109	SN54S331J	PLA	50	6	SE	BTD	35nt$	610m†Ø	0.0	5.0	.80	2.0	20m	.50	5	C	12 VAR	Z25	ML213
110	SN74S330J	PLA	50	6	SE	BTD	35nt$	550m†Ø	0.0	5.0	.80	2.0§	20m	.50	0	7	12 VAR	Z25	ML213

20. SPECIAL MEMORY DEVICES

IN ORDER OF: (1)FUNCT CODE (2)NO. WORDS (3)BITS/WD (4)OP MODE (5)STRUCT &(6)TYPE NO.

LINE No.	6 TYPE No.	1 FUNCT -ION CODE	ORGANIZATION 2 No. WORDS	3 BITS per WORD	4 OP MODE PROG CODE	5 STRUC -TURE CODE	MAX. ACCES TIME (S)	MAX. OPER. PWR. DISS. (W)	RATED PWR. SUPPLY SPAN NEG. (V)	RATED PWR. SUPPLY SPAN POS. (V)	INPUT LOGIC LEVELS MAX. '0' (V)	INPUT LOGIC LEVELS MIN. '1' (V)	MIN. OUTPUT SINK CURRENT (A)	MIN. OUTPUT OUTPUT VOLT (V)	OUTPUT TEMP. RNG. CODE -	OUTPUT TEMP. RNG. CODE +	GENERAL DESCRIPT -ION	DRAWINGS LOGIC/ BLOCK	DRAWINGS OUT -LINE
1	SN74S330N	PLA	50	6	SE	BTD	35nt$	550mt∅	0.0	5.0	.80	2.0§	20m	.50	0	7	12 VAR	Z25	ML161
2	SN74S331J	PLA	50	6	SE	BTD	35nt$	610mt∅	0.0	5.0	.80	2.0	20m	.50	0	7	12 VAR	Z25	ML213
3	SN74S331N	PLA	50	6	SE	BTD	35nt$	610mt∅	0.0	5.0	.80	2.0	20m	.50	0	7	12 VAR	Z25	ML161
4	N82S104F	PLS			SE	BTX	90n	650mt	0.0	5.0	0.8	2.0Δ	40uΔ	5.5	0	7	16VAR	Z64	ML411
5	N82S105F	PLS			SE	BTX	90n	650mt	0.0	5.0	0.8	2.0§	40uΔ	5.5	0	7	16VAR	Z64	ML411
6	29693DC	PMX	8	4	SE	BTD	55n	700m	0.0	5.0	.80	2.0§	16m	.50	0	7	10 Input	Z36a	ML∅
7	29693DM	PMX	8	4	SE	BTD	75n	700m	0.0	5.0	.80	2.0§	16m	.50	5	C	10 Input	Z36a	ML∅
8	29693FM	PMX	8	4	SE	BTD	75n	700m	0.0	5.0	.80	2.0§	16m	.50	5	C	10 Input	Z36	FL∅
9	D3242	PMX	14	7	D	BXD	9n∅	725m	0.0	5.0	.80	2.0			0	7		Z62	
10#	N82S106I	PRP	48	8	SE	BTD	70n	600mt	0.0	5.0	.80	2.0Δ	40uΔ	5.5	0	7	16Inp	Z65	M218b
11#	N82S106N	PRP	48	8	SE	BTD	70n	600mt	0.0	5.0	.80	2.0Δ	40uΔ	5.5	0	7	16Inp	Z65	M290
12#	N82S107I	PRP	48	8	SE	BTD	70n	600mt	0.0	5.0	.80	2.0§	40uΔ	5.5	0	7	16Inp	Z65	M218b
13#	N82S107N	PRP	48	8	SE	BTD	70n	600mt	0.0	5.0	.80	2.0§	40uΔ	5.5	0	7	16Inp	Z65	M290
14	N82S106F	PRP	48	8	SE	BTX	70n	600mt	0.0	5.0	0.8	2.0Δ	40uΔ	5.5	0	7		Z65	ML411
15	N82S107F	PRP	48	8	SE	BTX	70n	600mt	0.0	5.0	0.8	2.0§	40uΔ	5.5	0	7		Z65	ML411
16	MM4220DFJ	QBF	128	8	SS	MPX	650n∅	300m∅	12	12	10*	4.0#			5	C		Z19	ML133a
17	MM5220DFJ	QBF	128	8	SS	MPX	650n∅	300m∅	12	12	10*	4.0#			0	7		Z19	ML133a
18	MM5220DFN	QBF	128	8	SS	MPX	650n∅	300m∅	12	12	10*	4.0#			0	7		Z19	ML183
19#	M253B1XX	RYG	384	8	SC	MPG		120m	12	5.0	.90	3.5			0	7	12 RHY	Z17a	ML31c
20#	M253D1XX	RYG	384	8	SC	MPG		120m	12	5.0	.90	3.5			0	7	12 RHY	Z17a	ML173
21#	M253B1AA	RYG	384	8	SS	MPG		120m	12	5.0	.90	3.5			0	7	12 RHY	Z17	ML31c
22#	M253D1AA	RYG	384	8	SS	MPG		120m	12	5.0	.90	3.5			0	7	12 RHY	Z17	ML173
23#	M250D1	RYG	432	8	SC	MPN		180mt	0.0	18	8.0	17	100uΔ	18	0	7	12 RHY	Z15	ML173
24#	M254B1XX	RYG	432	8	SC	MPN		180m	0.0	18	8.0	17			0	7	8 RHY	Z18	ML31c
25#	M252B1XX	RYG	480	8	SC	MPG		120m	12	5.0	.90	3.5			0	7	15 RHY	Z16a	ML60
26#	M252D1XX	RYG	480	8	SC	MPG		120m	12	5.0	.90	3.5			0	7	15 RHY	Z16a	ML158
27#	M252B1AA	RYG	480	8	SS	MPG		120m	12	5.0	.90	3.5			0	7	15 RHY	Z16	ML60
28#	M252D1AA	RYG	480	8	SS	MPG		120m	12	5.0	.90	3.5			0	7	15 RHY	Z16	ML158
29▼	5086J24	SIN	1024	10	SC	BTD	100n	500m	0.0	5.0	.80	2.0	6.0m	.50	5	C		PN24eg	ML276
30▼	5087J24	SIN	1024	10	SC	BTD	100n	500m	0.0	5.0	.80	2.0	6.0m	.50	5	C		PN24eg	ML276
31▼	6086J24	SIN	1024	10	SC	BTD	100n	500m	0.0	5.0	.80	2.0	6.0m	.50	0	7		PN24eg	ML276
32▼	6087J24	SIN	1024	10	SC	BTD	100n	500m	0.0	5.0	.80	2.0	6.0m	.50	0	7		PN24eg	ML276
33▼	MB1412A	SYS		8		BTX		1.5	0.0	5.0	0.5%	2.7	20m		2	8	ERR DET	Z75	ML445
34	NC7033L	SYS	21	16	DE	MPN	50u	360m	20	10	5.4	9.2	250u	.80	0	7	NON-VOL	Z26	ML164
35	NC7033P	SYS	21	16	DE	MPN	50u	360m	20	10	5.4	9.2	250u	.80	0	7	NON-VOL	Z26	ML116
36	NC7053L	SYS	128	8	SE	MPN	1.0u	350m	25	5.0	.80	2.4	1.6m	.45	0	7	NON-VOL	Z33	ML207c
37	NC7053P	SYS	128	8	SE	MPN	1.0u	350m	25	5.0	.80	2.4	1.6m	.45	0	7	NON-VOL	Z33	ML72d
38♦	NC7714	SYS	256	4	SE	MPI	900n*	510m	15	25	.80	3.3§	1.6m	.60	0	7	NON-VOL	PN22bf	ML∅
39#	SFF96364AE	SYS	1024	6	%	MNG		1.0 Δ∅	0.0	5.0	0.65	2.2	.36m	0.4	0	7	CRT Proc		
40#	SFF96364AK	SYS	1024	6	%	MNG		1.0 Δ∅	0.0	5.0	0.65	2.2	.36m	0.4	0	7	CRT Proc		
41#	SFF96364BE	SYS	1024	6	%	MNG		1.0 Δ∅	0.0	5.0	0.65	2.2	.36m	0.4	0	7	CRT Proc		
42#	SFF96364BK	SYS	1024	6	%	MNG		1.0 Δ∅	0.0	5.0	0.65	2.2	.36m	0.4	0	7	CRT Proc		
43▼#	HD46846	SYS	2048	8	SC		10uΔ		0.0	5.0	.80	2.0	3.2m	.40	2	7		Z73	ML440
44▼#	HD46846P	SYS	2048	8	SC		10uΔ		0.0	5.0	.80	2.0	3.2m	.40	2	7		Z73	ML441
45▼	SN54LS600J	SYS	4096$	8	DE	BTD	40n$		0.0	5.0	.70	2.0	12m#	.40	5	C		PN20ah	ML14a
46▼	SN54LS602J	SYS	4096$	8	DE	BTD	40n$		0.0	5.0	.70	2.0	12m#	.40	5	C		PN20ah	ML14a
47▼	SN74LS600J	SYS	4096$	8	DE	BTD	40n$		0.0	5.0	.80	2.0	24m#	.50	0	7		PN20ah	ML14a
48▼	SN74LS600N	SYS	4096$	8	DE	BTD	40n$		0.0	5.0	.80	2.0	24m#	.50	0	7		PN20ah	ML443
49▼	SN74LS602J	SYS	4096$	8	DE	BTD	40n$		0.0	5.0	.80	2.0	24m#	.50	0	7		PN20ah	ML14a
50▼	SN74LS602N	SYS	4096$	8	DE	BTD	40n$		0.0	5.0	.80	2.0	24m#	.50	0	7		PN20ah	ML443
51▼	SN54LS601J	SYS	64000	8	DE	BTD	40n$		0.0	5.0	.70	2.0	12m#	.40	5	C		PN20ai	ML14a
52▼	SN54LS603J	SYS	64000	8	DE	BTD	40n$		0.0	5.0	.70	2.0	12m#	.40	5	C		PN20ai	ML14a
53▼	SN74LS601J	SYS	64000	8	DE	BTD	40n$		0.0	5.0	.80	2.0	24m#	.50	0	7		PN20ai	ML14a
54▼	SN74LS601N	SYS	64000	8	DE	BTD	40n$		0.0	5.0	.80	2.0	24m#	.50	0	7		PN20ai	ML443
55▼	SN74LS603J	SYS	64000	8	DE	BTD	40n$		0.0	5.0	.80	2.0	24m#	.50	0	7		PN20ai	ML14a
56▼	SN74LS603N	SYS	64000	8	DE	BTD	40n$		0.0	5.0	.80	2.0	24m#	.50	0	7		PN20ai	ML443

21. TYPES WITH U.S. MILITARY SPECIFICATIONS

IN TYPE NUMBER SEQUENCE

TYPE No.	MFRS	MIL-M-38510/
M38510/00901BAA	MOTA	9C Ø AMEND 5
M38510/00901BAB	MOTA	9C Ø AMEND 5
M38510/00901BCA	MOTA SIC	9C Ø AMEND 5
M38510/00901BCB	MOTA SIC	9C Ø AMEND 5
M38510/00901BDA	none	9C Ø AMEND 5
M38510/00901BDB	none	9C Ø AMEND 5
M38510/00901CAA	MOTA	9C Ø AMEND 5
M38510/00901CAB	MOTA	9C Ø AMEND 5
M38510/00901CCA	MOTA SIC	9C Ø AMEND 5
M38510/00901CCB	MOTA SIC	9C Ø AMEND 5
M38510/00901CDA	none	9C Ø AMEND 5
M38510/00901CDB	none	9C Ø AMEND 5
M38510/00902BEA	MOTA SIC	9C Ø AMEND 5
M38510/00902BEB	MOTA SIC	9C Ø AMEND 5
M38510/00902BFA	MOTA SIC	9C Ø AMEND 5
M38510/00902BFB	MOTA SIC	9C Ø AMEND 5
M38510/00902CEA	MOTA SIC	9C Ø AMEND 5
M38510/00902CEB	MOTA SIC	9C Ø AMEND 5
M38510/00902CFA	MOTA SIC	9C Ø AMEND 5
M38510/00902CFB	MOTA SIC	9C Ø AMEND 5
M38510/00903BCA	SIC	9C Ø AMEND 5
M38510/00903BCB	SIC	9C Ø AMEND 5
M38510/00903CCA	SIC	9C Ø AMEND 5
M38510/00903CCB	SIC	9C Ø AMEND 5
M38510/00904BEA	MOTA	9C Ø AMEND 5
M38510/00904BEB	MOTA	9C Ø AMEND 5
M38510/00904BFA	MOTA	9C Ø AMEND 5
M38510/00904BFB	MOTA	9C Ø AMEND 5
M38510/00904CEA	MOTA	9C Ø AMEND 5
M38510/00904CEB	MOTA	9C Ø AMEND 5
M38510/00904CFA	MOTA	9C Ø AMEND 5
M38510/00904CFB	MOTA	9C Ø AMEND 5
M38510/00905BEA	MOTA SIC	9C Ø AMEND 5
M38510/00905BEB	MOTA SIC	9C Ø AMEND 5
M38510/00905BFA	MOTA SIC	9C Ø AMEND 5
M38510/00905BFB	MOTA SIC	9C Ø AMEND 5
M38510/00905CEA	MOTA SIC	9C Ø AMEND 5
M38510/00905CEB	MOTA SIC	9C Ø AMEND 5
M38510/00905CFA	MOTA SIC	9C Ø AMEND 5
M38510/00905CFB	MOTA SIC	9C Ø AMEND 5
M38510/00906BEA	MOTA	9C Ø AMEND 5
M38510/00906BEB	MOTA	9C Ø AMEND 5
M38510/00906BFA	MOTA	9C Ø AMEND 5
M38510/00906BFB	MOTA	9C Ø AMEND 5
M38510/00906CEA	MOTA	9C Ø AMEND 5
M38510/00906CEB	MOTA	9C Ø AMEND 5
M38510/00906CFA	MOTA	9C Ø AMEND 5
M38510/00906CFB	MOTA	9C Ø AMEND 5
M38510/02801BCA	none	28B AMEND 2 USAF
M38510/02801BCB	none	28B AMEND 2 USAF
M38510/02801BDA	NSC	28B AMEND 2 USAF
M38510/02801BDB	none	28B AMEND 2 USAF
M38510/02801CCA	none	28B AMEND 2 USAF
M38510/02801CCB	none	28B AMEND 2 USAF
M38510/02801CDA	none	28B AMEND 2 USAF
M38510/02801CDB	none	28B AMEND 2 USAF
M38510/05701BCA	none	57B Ø AMEND 2
M38510/05701BCB	RCA	57B Ø AMEND 2
M38510/05701BCC	MOTA	57B ØØ AMEND 2
M38510/05701CCA	none	57B Ø AMEND 2
M38510/05701CCB	RCA	57B Ø AMEND 2
M38510/05701CCC	MOTA	57B ØØ AMEND 2
M38510/05702BEB	RCA	57B Ø AMEND 2
M38510/05702BFA	RCA	57B Ø AMEND 2
M38510/05702CEB	RCA	57B Ø AMEND 2
M38510/05702CFA	RCA	57B Ø AMEND 2
M38510/05703BEA	SSS	57B Ø AMEND 2
M38510/05703BEB	RCA	57B Ø AMEND 2
M38510/05703BEC	SSS	57B ØØ AMEND 2
M38510/05703BFA	RCA	57B Ø AMEND 2
M38510/05703CEA	SSS	57B ØØ AMEND 2
M38510/05703CEB	RCA	57B Ø AMEND 2
M38510/05703CEC	SSS	57B ØØ AMEND 2
M38510/05703CFA	RCA	57B Ø AMEND 2
M38510/05704BEA	SSS	57B Ø AMEND 2
M38510/05704BEB	RCA	57B Ø AMEND 2
M38510/05704BEC	SSS	57B ØØ AMEND 2
M38510/05704BFA	RCA	57B Ø AMEND 2
M38510/05704CEA	SSS	57B Ø AMEND 2
M38510/05704CEB	RCA	57B Ø AMEND 2
M38510/05704CEC	SSS	57B ØØ AMEND 2
M38510/05704CFA	RCA	57B Ø AMEND 2
M38510/05705BFA	RCA	57B Ø AMEND 2
M38510/05705CFA	RCA	57B Ø AMEND 2
M38510/07601BEB	AMD	76 ØØ AMEND 2 USAF
M38510/07601BFB	AMD	76 ØØ AMEND 2 USAF
M38510/07601CEB	AMD	76 ØØ AMEND 2 USAF
M38510/07601CFB	AMD	76 ØØ AMEND 2 USAF
M38510/15901BEA	MOTA	159 Ø AMEND 2 USAF
M38510/15901BEB	MOTA	159 Ø AMEND 2 USAF
M38510/15901BFA	MOTA	159 Ø AMEND 2 USAF
M38510/15901BFB	MOTA	159 Ø AMEND 2 USAF
M38510/15901CEA	MOTA	159 Ø AMEND 2 USAF
M38510/15901CEB	MOTA	159 Ø AMEND 2 USAF
M38510/15901CFA	MOTA	159 Ø AMEND 2 USAF
M38510/15901CFB	MOTA	159 Ø AMEND 2 USAF
M38510/15902BEA	MOTA	159 Ø AMEND 2 USAF
M38510/15902BEB	MOTA	159 Ø AMEND 2 USAF
M38510/15902BFA	MOTA	159 Ø AMEND 2 USAF
M38510/15902BFB	MOTA	159 Ø AMEND 2 USAF
M38510/15902CEA	MOTA	159 Ø AMEND 2 USAF
M38510/15902CEB	MOTA	159 Ø AMEND 2 USAF
M38510/15902CFA	MOTA	159 Ø AMEND 2 USAF
M38510/15902CFB	MOTA	159 Ø AMEND 2 USAF
M38510/20101BJB	HAS	201A Ø AMEND 1 USAF
M38510/20101CJB	HAS	201A Ø AMEND 1 USAF
M38510/20301BEA	SIC	203 ☑ AMEND 2 USAF
M38510/20301BEB	HAS SIC	203 ☑ AMEND 2 USAF
M38510/20301BEC	none	203 ☑ AMEND 2 USAF
M38510/20301BFC	none	203 ☑ AMEND 2 USAF
M38510/20301CEC	none	203 ☑ AMEND 2 USAF
M38510/20301CFA	none	203 ☑ AMEND 1 USAF
M38510/20301CFB	none	203 ☑ AMEND 1 USAF
M38510/20301CFC	none	203 ☑ AMEND 2 USAF
M38510/20302BEA	SIC	203 ☑ AMEND 2 USAF
M38510/20302BEB	HAS SIC	203 ☑ AMEND 2 USAF
M38510/20302BEC	none	203 ☑ AMEND 2 USAF
M38510/20302BFC	none	203 ☑ AMEND 2 USAF
M38510/20302CEA	SIC	203 ☑ AMEND 2 USAF
M38510/20302CEB	HAS SIC	203 ☑ AMEND 2 USAF
M38510/20302CEC	none	203 ☑ AMEND 2 USAF
M38510/20302CFC	none	203 ☑ AMEND 2 USAF
M38510/20401BEA	SIC	204 ☑ AMEND 2 USAF
M38510/20401BEB	HAS SIC	204 ☑ AMEND 2 USAF
M38510/20401BEC	none	204 ☑ AMEND 2 USAF
M38510/20401BFC	none	204 ☑ AMEND 2 USAF
M38510/20401CEA	SIC	204 ☑ AMEND 2 USAF
M38510/20401CEB	HAS SIC	204 ☑ AMEND 2 USAF

† - Qualification included TX Devices
Δ - TX and TXV Devices

§ - NATO
☑ - USAF Preferred (TX Type Only)
Ø - Mil-Std-701 Device

21. TYPES WITH U.S. MILITARY SPECIFICATIONS

IN TYPE NUMBER SEQUENCE

TYPE No.	MFRS	MIL-M-38510/
M38510/20401CEC	none	204 ☑ AMEND 2 USAF
M38510/20401CFC	none	204 ☑ AMEND 2 USAF
M38510/20402BEA	SIC	204 ☑ AMEND 2 USAF
M38510/20402BEB	HAS SIC	204 ☑ AMEND 2 USAF
M38510/20402BEC	none	204 ☑ AMEND 2 USAF
M38510/20402BFC	none	204 ☑ AMEND 2 USAF
M38510/20402CEA	SIC	204 ☑ AMEND 2 USAF
M38510/20402CEB	HAS SIC	204 ☑ AMEND 2 USAF
M38510/20402CEC	none	204 ☑ AMEND 2 USAF
M38510/20402CFC	none	204 ☑ AMEND 2 USAF
M38510/20601BVB	HAS SIC	206 ☑ AMEND 1 USAF
M38510/20601CVB	HAS SIC	206 ☑ AMEND 1 USAF
M38510/20602BVB	HAS SIC	206 ☑ AMEND 1 USAF
M38510/20602CVB	HAS SIC	206 ☑ AMEND 1 USAF
M38510/20901BVB	SIC	209 ☑
M38510/20901CVB	SIC	209 ☑
M38510/20902BVB	SIC	209 ☑
M38510/20902CVB	SIC	209 ☑
M38510/20903BJB	SIC	209 ☑
M38510/20903CJB	SIC	209 ☑
M38510/20904BJB	SIC	209 ☑
M38510/20904CJB	SIC	209 ☑
M38510/23501BWC	TII	235A ☑ USAF
M38510/23501CWC	TII	235A ☑ USAF
M38510/23502BVC	TII	235A ☑ USAF
M38510/23502CVC	TII	235A ☑ USAF
M38510/30106BEA	MOTA	301 AMEND 1 USAF
M38510/30106BEB	AMD FSC MOTA TII	301 AMEND 1 USAF
M38510/30106BFA	MOTA	301 AMEND 1 USAF
M38510/30106BFB	AMD MOTA TII	301 AMEND 1 USAF
M38510/30106CEA	MOTA	301 AMEND 1 USAF
M38510/30106CEB	AMD FSC MOTA TII	301 AMEND 1 USAF
M38510/30106CFA	MOTA	301 AMEND 1 USAF
M38510/30106CFB	AMD MOTA TII	301 AMEND 1 USAF
M38510/30601BEA	MOTA SIC	306B ØØ USAF
M38510/30601BEB	AMD MOTA SIC TII	306B ØØ USAF
M38510/30601BFA	MOTA SIC	306B ØØ USAF
M38510/30601BFB	AMD MOTA SIC TII	306B ØØ USAF
M38510/30601CEA	MOTA SIC	306B ØØ USAF
M38510/30601CEB	AMD MOTA SIC TII	306B ØØ USAF
M38510/30601CFA	SIC	306B ØØ USAF
M38510/30601CFB	AMD MOTA SIC TII	306B ØØ USAF
M38510/30602BEA	SIC	306B ØØ USAF
M38510/30602BEB	AMD SIC TII	306B ØØ USAF
M38510/30602BFA	SIC	306B ØØ USAF
M38510/30602BFB	AMD SIC TII	306B ØØ USAF
M38510/30602CEA	SIC	306B ØØ USAF
M38510/30602CEB	AMD SIC TII	306B ØØ USAF
M38510/30602CFA	SIC	306B ØØ USAF
M38510/30602CFB	AMD SIC TII	306B ØØ USAF
M38510/30603BCA	SIC	306B ØØ USAF
M38510/30603BCB	FSC SIC TII	306B ØØ USAF
M38510/30603BDA	SIC	306B ØØ USAF
M38510/30603BDB	SIC TII	306B ØØ USAF
M38510/30603CCA	SIC	306B ØØ USAF
M38510/30603CCB	FSC SIC TII	306B ØØ USAF
M38510/30603CDA	SIC	306B ØØ USAF
M38510/30603CDB	SIC TII	306B ØØ USAF
M38510/30604BEA	SIC	306B ØØ USAF
M38510/30604BEB	SIC TII	306B ØØ USAF
M38510/30604BFA	SIC	306B ØØ USAF
M38510/30604BFB	SIC TII	306B ØØ USAF
M38510/30604CEA	SIC	306B ØØ USAF
M38510/30604CEB	SIC TII	306B ØØ USAF
M38510/30604CFA	SIC	306B ØØ USAF
M38510/30604CFB	SIC TII	306B ØØ USAF
M38510/30605BAB	AMD FSC	306B ØØ USAF
M38510/30605BAC	FSC	306B ØØ USAF
M38510/30605BCA	SIC	306B ØØ USAF
M38510/30605BCB	SIC	306B ØØ USAF
M38510/30605BDA	SIC	306B ØØ USAF
M38510/30605BDB	SIC	306B ØØ USAF
M38510/30605CAB	AMD FSC	306B ØØ USAF
M38510/30605CAC	FSC	306B ØØ USAF
M38510/30605CCA	SIC	306B ØØ USAF
M38510/30605CCB	SIC	306B ØØ USAF
M38510/30605CDA	SIC	306B ØØ USAF
M38510/30605CDB	SIC	306B ØØ USAF
M38510/30606BCA	SIC	306B ØØ USAF
M38510/30606BCB	SIC TII	306B ØØ USAF
M38510/30606BDA	SIC	306B ØØ USAF
M38510/30606BDB	SIC TII	306B ØØ USAF
M38510/30606CCA	SIC	306B ØØ USAF
M38510/30606CCB	SIC TII	306B ØØ USAF
M38510/30606CDA	SIC	306B ØØ USAF
M38510/30606CDB	SIC TII	306B ØØ USAF
M38510/30607BEA	SIC	306B ØØ USAF
M38510/30607BEB	SIC TII	306B ØØ USAF
M38510/30607BFA	SIC	306B ØØ USAF
M38510/30607BFB	SIC TII	306B ØØ USAF
M38510/30607CEA	SIC	306B ØØ USAF
M38510/30607CEB	SIC TII	306B ØØ USAF
M38510/30607CFA	SIC	306B ØØ USAF
M38510/30607CFB	SIC TII	306B ØØ USAF

† - Qualification included TX Devices
Δ - TX and TXV Devices

§ - NATO
☑ - USAF Preferred (TX Type Only)
Ø - Mil-Std-701 Device

MILITARY DOCUMENTS

Department of Defense Index of Specifications and Standards.

Device Manufacturers Qualifications on Test Reference Letter.

MIL–M–38510D Military Specification, General Specification for Microcircuits, dated 31 August 1977, Amendment 1, dated 21 July 1978; Supplement 1F, dated 10 March 1980.

QPL–38510–45 Qualified Products List (Part 1) of Products Qualified Under Military Specification MIL–M–38510, dated 26 September 1980. Qualified Products List (Part II) of Products Qualified Under Military Specification MIL–M–38510, dated 26 September 1980. These products are considered qualified products. Therefore, manufacturers listed on QPL-38510 shall "JAN" mark and ship the specific part-numbered devices for which they are listed, providing all required qualify conformance inspections have been successfully completed. They have not been subjected to all the tests required for qualification under the latest effective issue of MIL–M–38510; however, the manufacturers have performed sufficient similar tests to indicate that the products have the potential of complying with the MIL–M–38510 requirements.

MIL–STD–833B Military Standard; Test Methods and Procedures for Microelectronics, dated 31 August 1977, Notice 1, dated 21 July 1978.

MIL–STD–1562B Military Standard; List of Standard Microcircuits, dated 15 Oct. 1979.

NOTE: The 3-letter suffix at the end of the type number represents device class (degree of quality assurance testing), case outline and lead material finish as shown below:

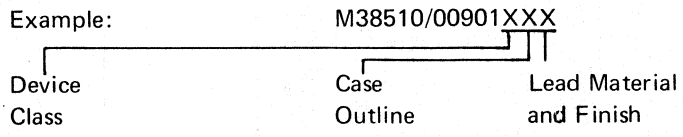

Only types with actual or previous sources of supply are listed in this edition.

21. COMMERCIAL-TO-MILITARY TYPE NUMBER CROSS-REFERENCE

COMMERCIAL TYPE No.	MILITARY TYPE No. M38510/
4006A	05701
4014A	05702
4015A	05703
4021A	05704
4031A	05705
4034A	05706
4014A	05702
4015A	05703
54L95	02801
54L164	02802
54LS95	30603
54LS96	30604
54LS164	30605
54LS174	30106
54LS175	30107
54LS194	30601
54LS195	30602
54LS295	30606
54LS395	30607
54S194	07602
54S195	20301, Circuit B
5300-1	20302, Circuit B
5301-1	20401, Circuit B
5305-1	20402, Circuit B
5306-1	20601, Circuit B
5352-1	20602, Circuit B
5353-1	20903, Circuit B
5380-1	20904, Circuit B
5381-1	00901
5495	00902
5496	20301, Circuit A
7610	20302, Circuit A
7611	20401, Circuit A
7620	20402, Circuit A
7621	20601, Circuit A
7642	20602, Circuit A
7643	20603, Circuit A
7644	20903, Circuit A
7680	20904, Circuit A
7681	20901, Circuit A
7684	20902, Circuit A
7685	00903
54164	00904
54165	01801
54170	01701
54174	01702
54175	00905
54194	00906
54195	23101
93415	20301, Circuit D
93417	23102
93425	20302, Circuit D
93427	20401, Circuit D
93436	20402, Circuit D
93446	20903, Circuit D
93450	20904, Circuit D
93451	20601, Circuit D
93452	20602, Circuit D
93453	02805
76L70	23101
82S10	23102
82S11	20301, Circuit C
82S126	20302, Circuit C
82S129	20401, Circuit C
82S130	20402, Circuit C
82S131	20601, Circuit C
82S136	20602, Circuit C
82S137	20903, Circuit C
82S180	20904, Circuit C
82S181	20901, Circuit C
82S184	20902, Circuit C
82S185	02804
93L00	02803
93L28	23103
93L415	23104
93L425	23701
AM9130CFC	23702
AM9130AFC	23703
AM9130CFM, CDM	23704
AM9130AFM, ADM	23705
AM91L30CF	23706
AM91L30AF	23707
AM91L30CFM, CDM	23708
AM91L30AFM, ADM	23709
AM9140CFC	23710
AM9140AFC	23711
AM9140CFM, CDM	23712
AM9140AFM, ADM	23713
AM91L40CFC	23714
AM91L40AFC	23715
AM91L40CFM, CDM	23716
AM91L40AFM, ADM	20101
HYPROM 512	20201
IM5603A	20202
IM5623	20101
MCM5303	20102
MCM5304	23602, 23604
MCM6604A	23601, 23603
MCM6605	23602, 23604
MKB4096	23505, 23506
MM5280	

22. LOGIC/BLOCK DRAWINGS

IN DRAWING NUMBER SEQUENCE

DRAWING PREFIX ASSIGNMENTS

LOGIC/BLOCK DRAWINGS

- A: RAMs
- B: ROMs
- C: Character Generators
- E: Code Converters
- F: Shift Registers
- Z: Miscellaneous

OUTLINE DRAWINGS

- CH: Chip
- CY: TO-5 type (non-JEDEC)
- FL: Flat package (non-JEDEC)
- ML: Molded or encapsulated package not included in other categories
- MO: Standard JEDEC outline
- PL: Printed circuit board
- TO: Standard JEDEC outline
- ⊠: Package style only shown; no dimensions.

NOTES

These outline drawings are intended as a guide for the user. They should not be used for construction purposes without first checking with the appropriate manufacturer.

These drawings are referenced in the Technical Sections of this D.A.T.A.BOOK in accordance with information supplied by the manufacturers.

The DO and TO drawings have been reproduced from JEDEC Registration Data Files with the permission of the National Electrical Manufacturer's Association – Electronic Industries Association. JEDEC designations are assigned only to outlines submitted by the JC-11 Committee on Mechanical Standardization. The procedure of assigning and announcing the JEDEC designation constitutes registration.

All dimensions are in inches except where noted.

A1

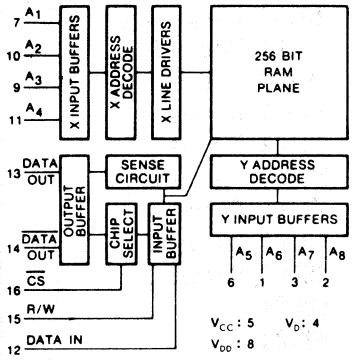

A2

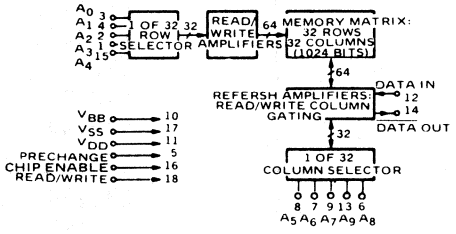

A27

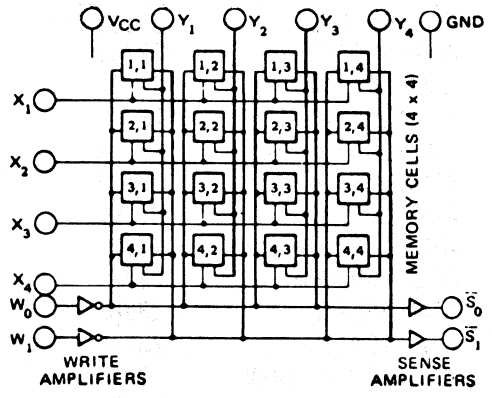

A36

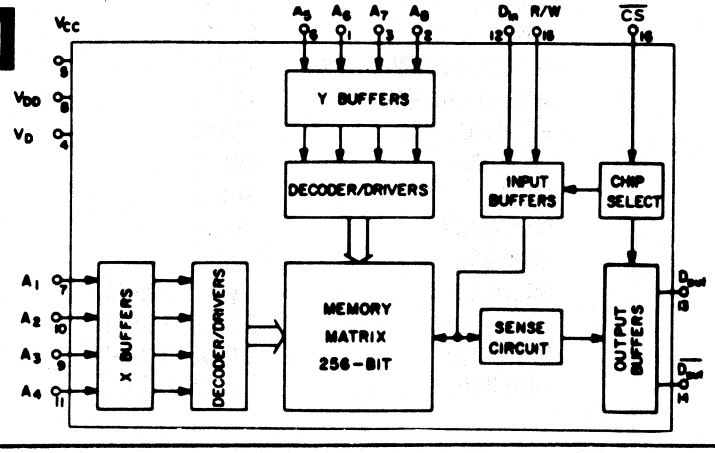

A60

	X				Y				S		W	
	0	1	2	3	0	1	2	3	0	1	0	1
A60	1	2	3	4	13	12	11	10	8	6	9	5
A60a	9	8	7	6	10	11	12	13	14	1	4	5

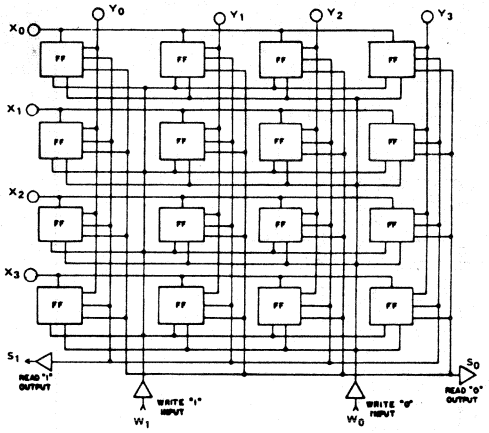

A66

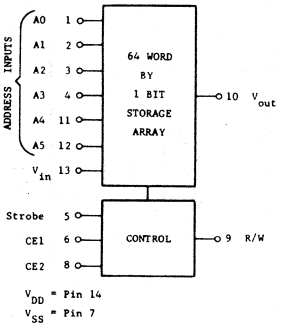

A67

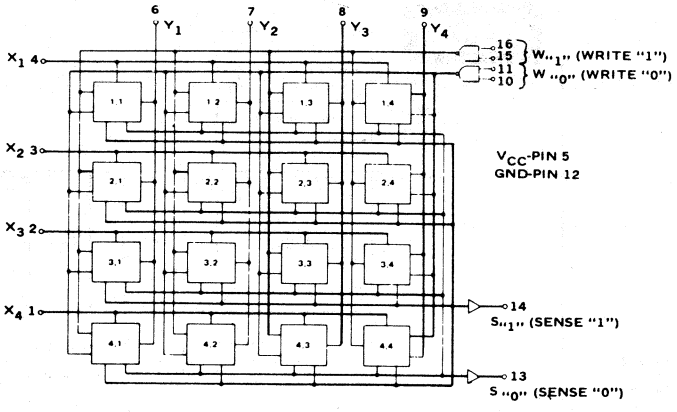

A73

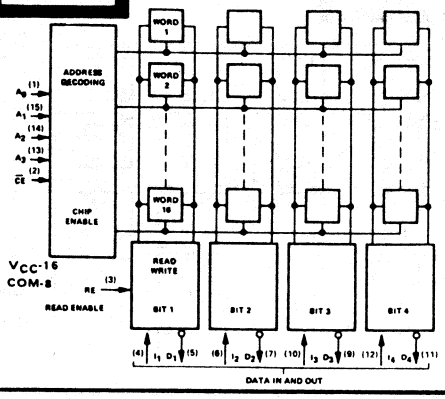

A68

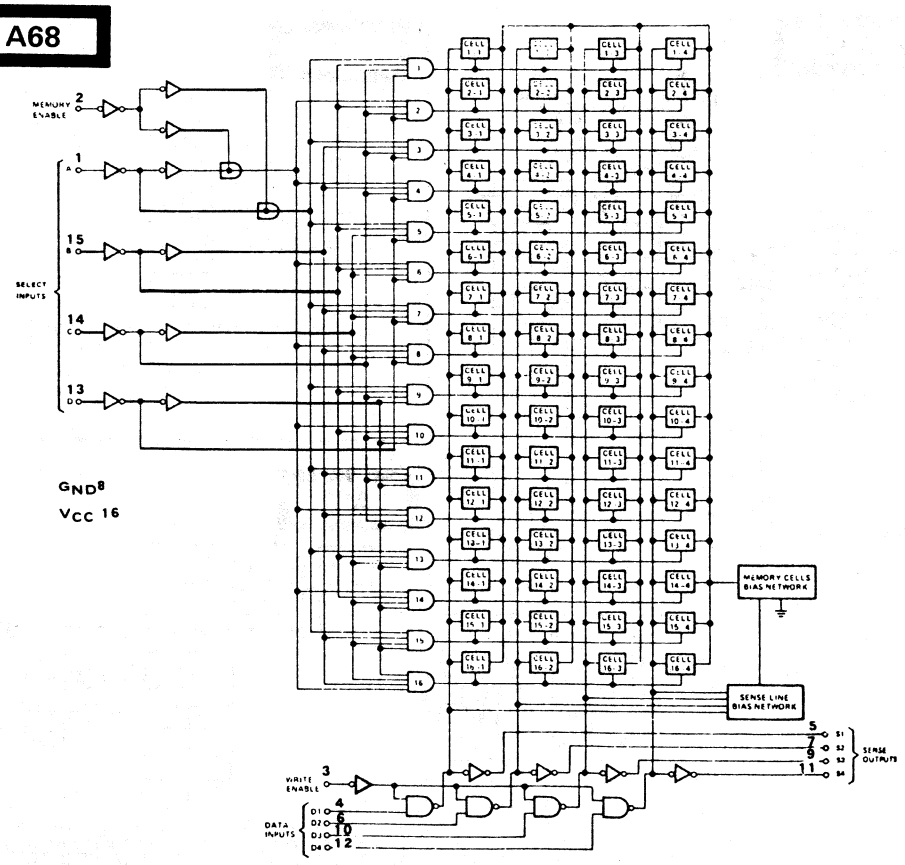

A74

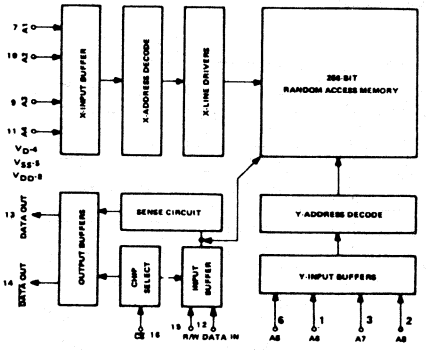

A76

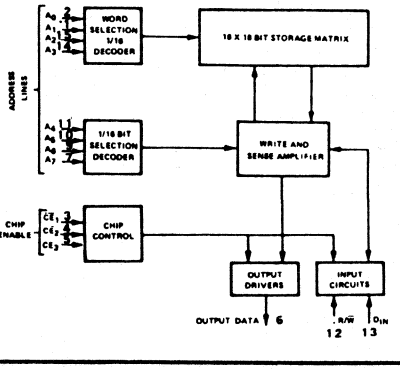

22. LOGIC/BLOCK DRAWINGS

IN DRAWING NUMBER SEQUENCE

A77

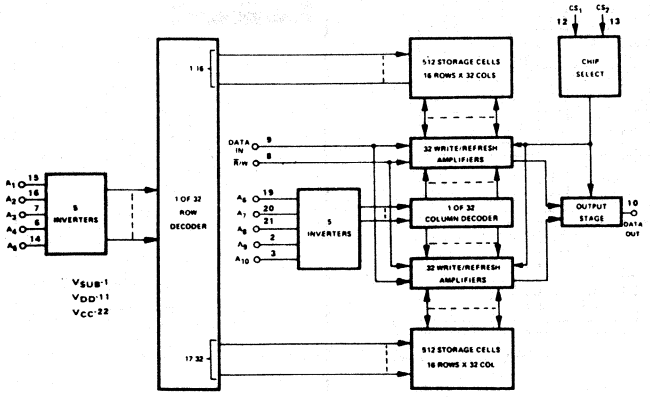

A81

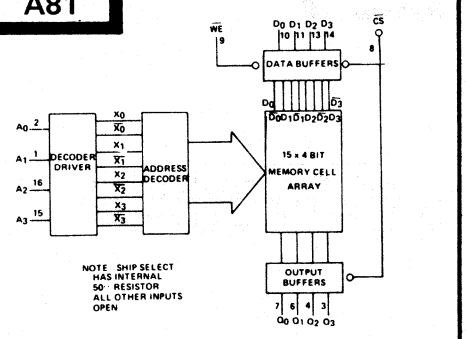

A84

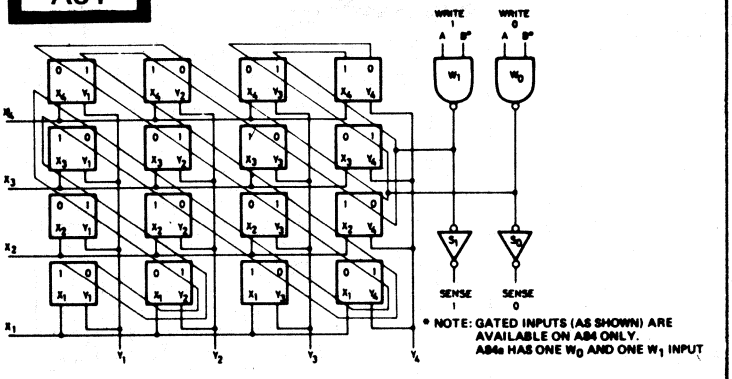

A87

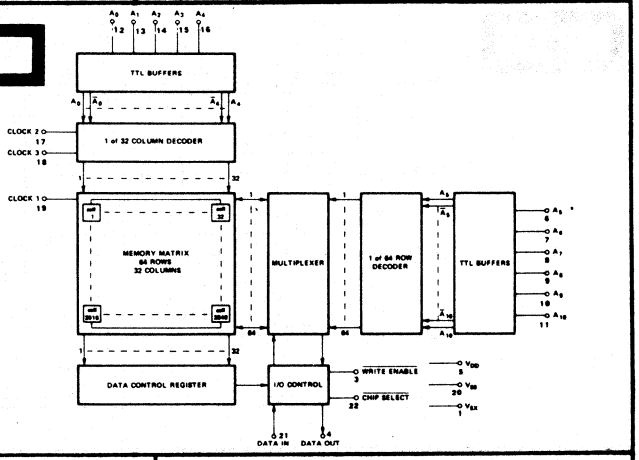

A90

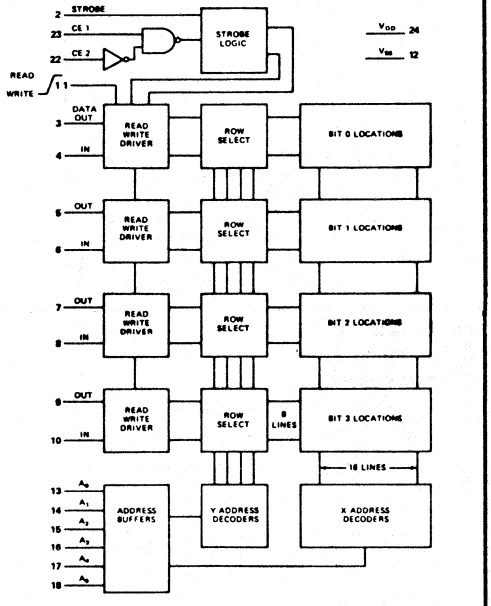

A92

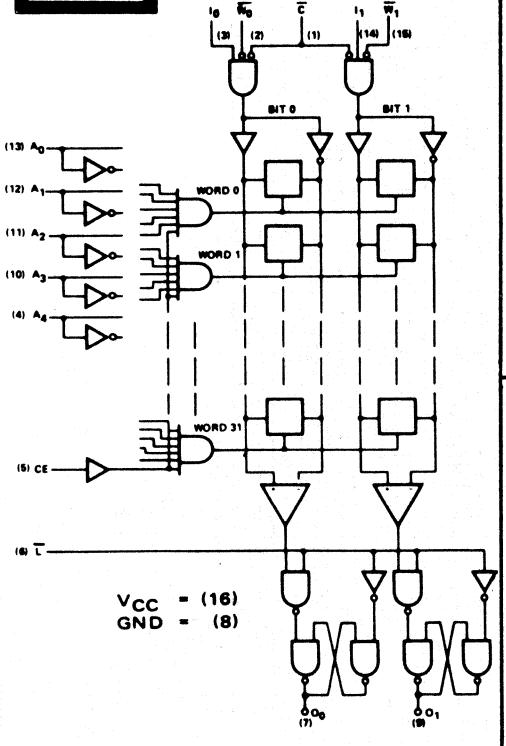

A94

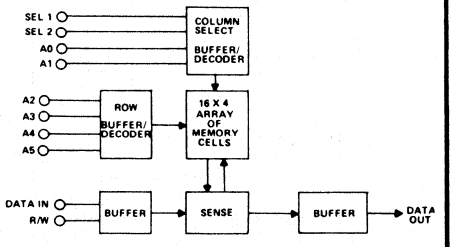

A97

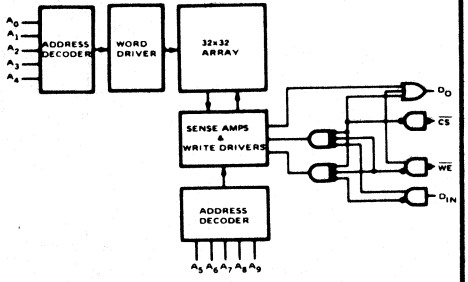

	A									D					
	0	1	2	3	4	5	6	7	8	9	IN	OUT	CS	WE	VEE	VCC
A97	2	3	4	5	6	9	10	11	12	13	15	7	1	14		
A97b	2	3	4	5	6	7	9	10	11	12	15	1	14	13	8	16

22. LOGIC/BLOCK DRAWINGS

IN DRAWING NUMBER SEQUENCE

A101

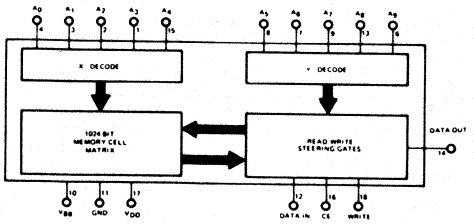

A110

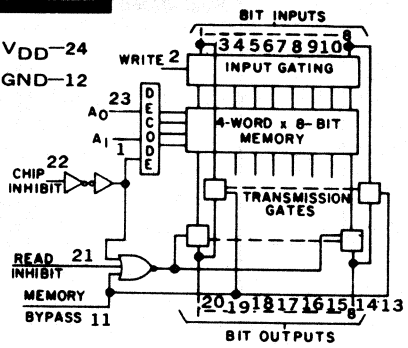

A111

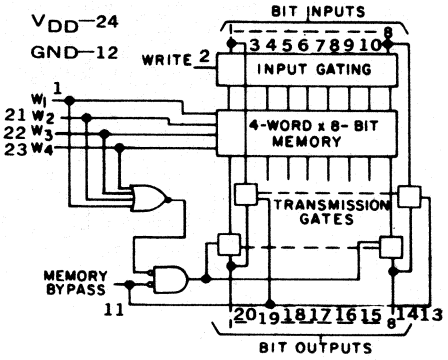

A118

A118 See PN 16r

118a See PN 16 hp

118b See PN hg

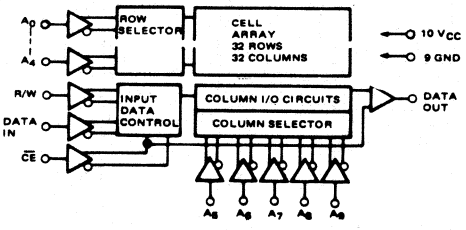

A121

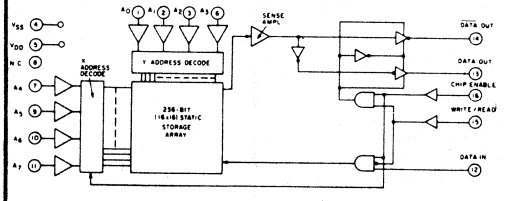

A126

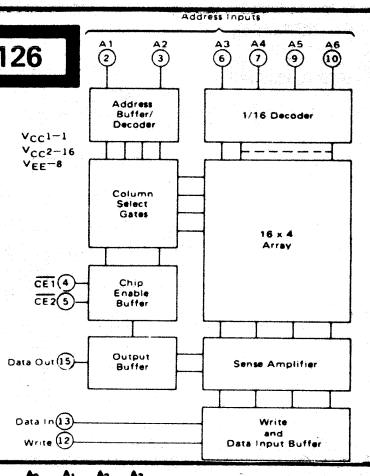

A128

A131 See PN 16s

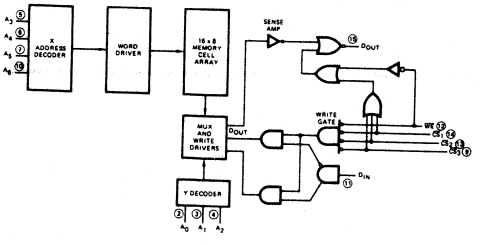

A130

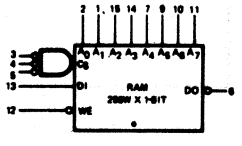

VCC = PIN 16
GND = PIN 8

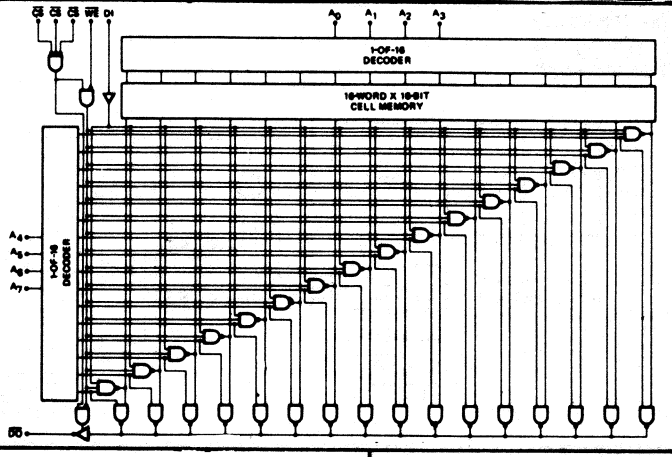

A132

A132 See PN 16t

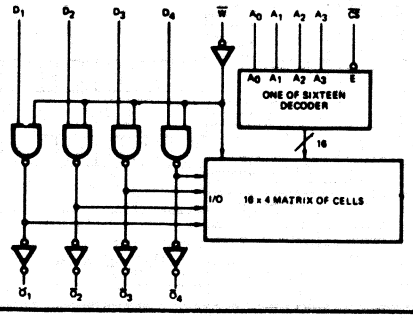

A134

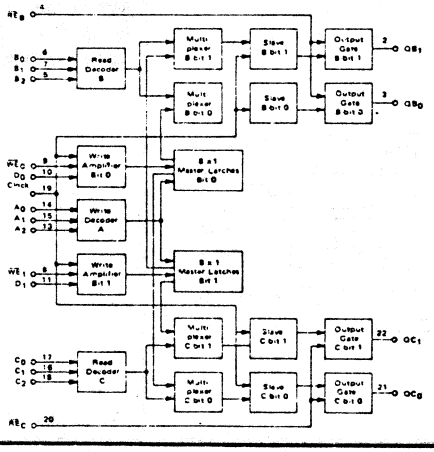

A136

A136 See PN 16u

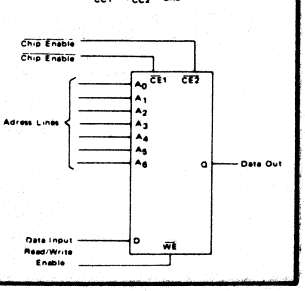

22. LOGIC/BLOCK DRAWINGS

IN DRAWING NUMBER SEQUENCE

A141

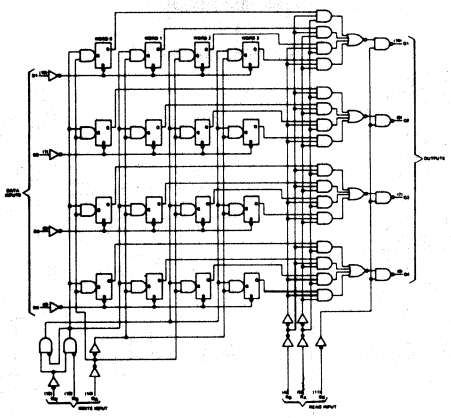

A143

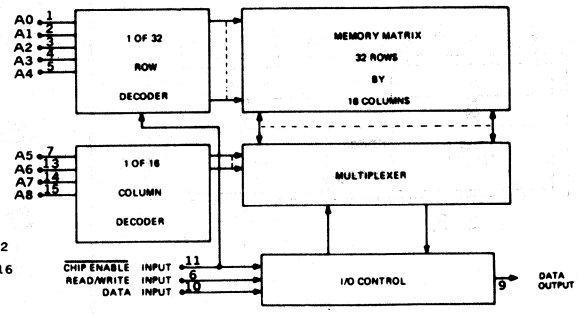

V_{SS} — PIN 8
N.C. — PIN 12
V_{DD} — PIN 16

A147

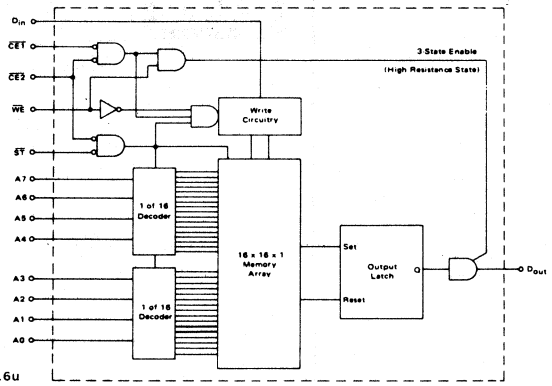

A147 See PN 16u

A 147 a See PN 16 v

A148

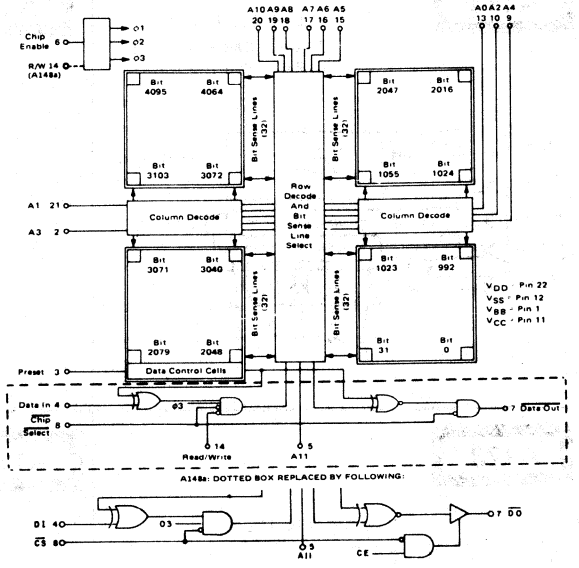

A150

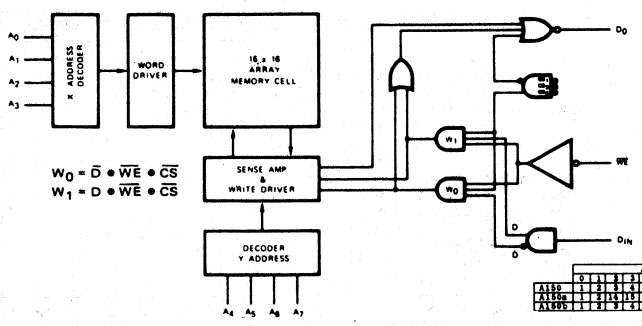

$W_0 = \overline{D} \bullet \overline{WE} \bullet \overline{CS}$
$W_1 = D \bullet \overline{WE} \bullet \overline{CS}$

	A									CS					
	0	1	2	3	4	5	6	7	DO	1	2	3	WE	DIN	REMARKS
A150	1	2	3	4	9	10	11	12	15	5	6	7	14	13	
A150a	1	2	14	15	7	8	10	11	6	3	4	5	13	13	NON-INVERTED DO
A150b	1	2	3	4	12	13	14	15	11	5	6	7	10	9	

A153

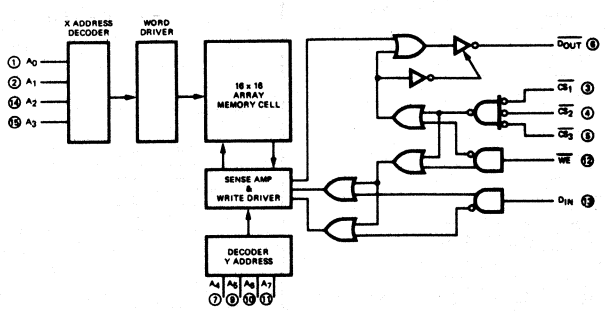

A154

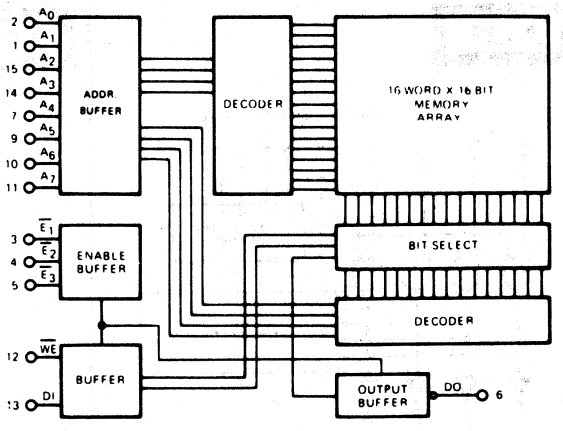

A154 See PN 16c

22. LOGIC/BLOCK DRAWINGS

IN DRAWING NUMBER SEQUENCE

A155

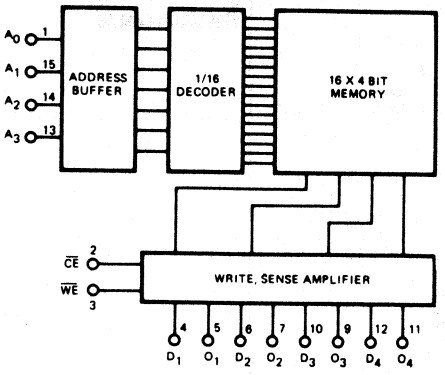

V_{CC}/V_{DD}—PIN 16
GND/V_{SS}—PIN 8

A155 See PN 16d

A156

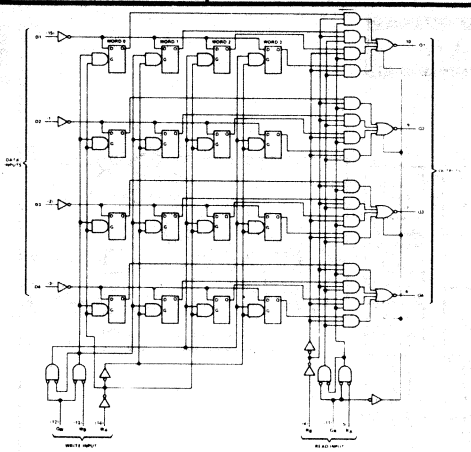

A157

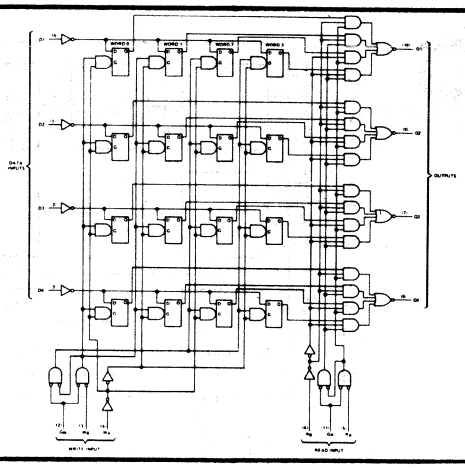

A159

A159 See PN 16x

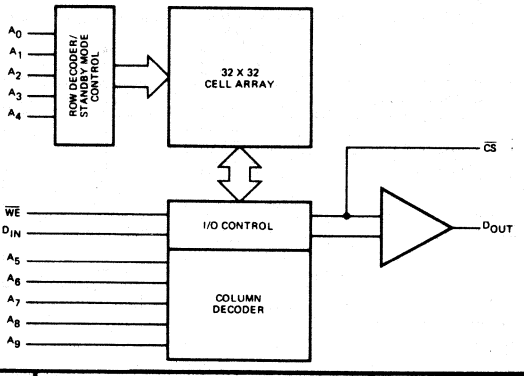

A162

A162 See PN 22a

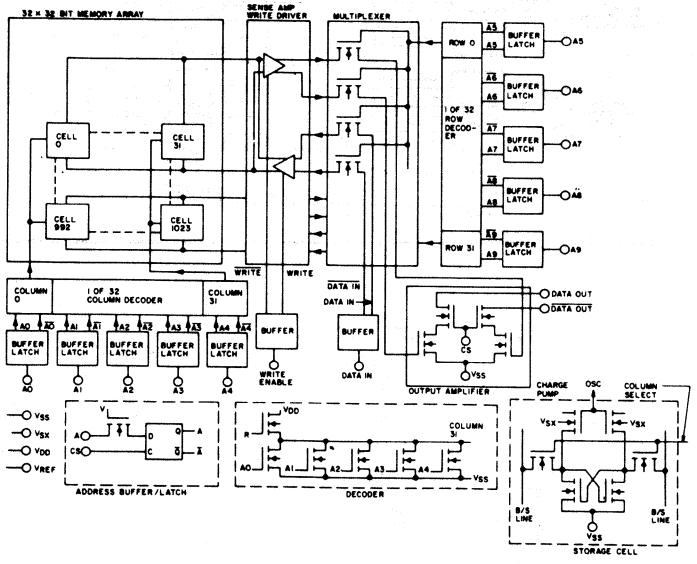

22. LOGIC/BLOCK DRAWINGS

IN DRAWING NUMBER SEQUENCE

A163

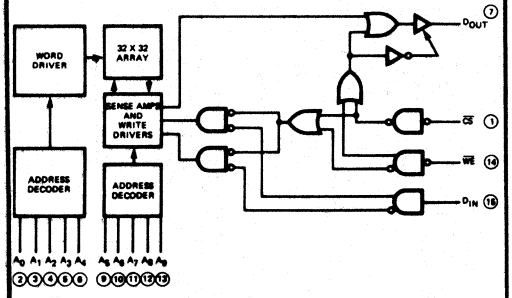

A165

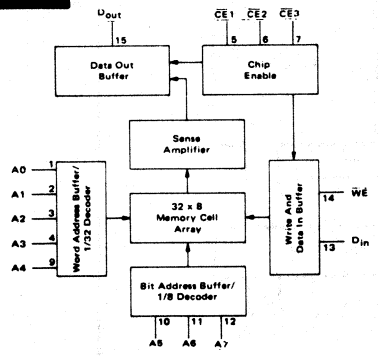

A166

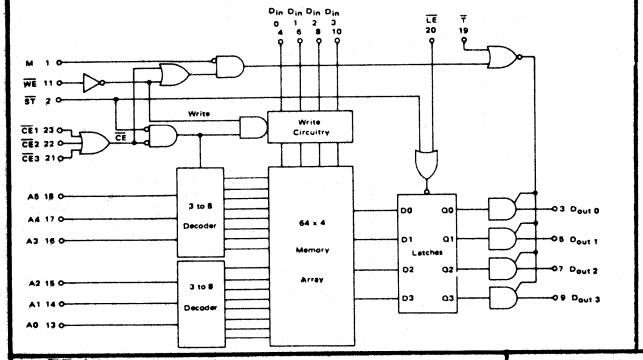

A170

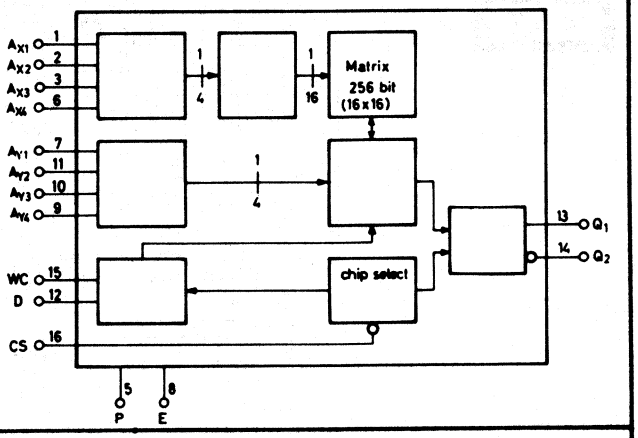

A172

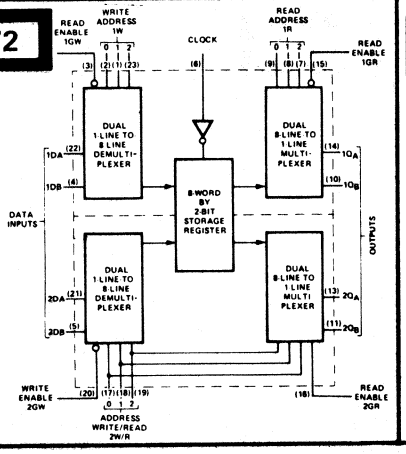

A173

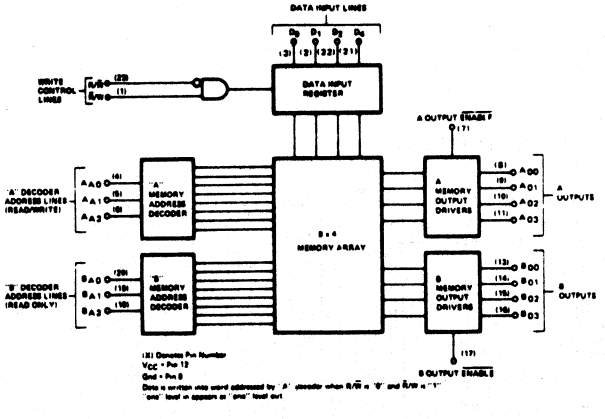

A174

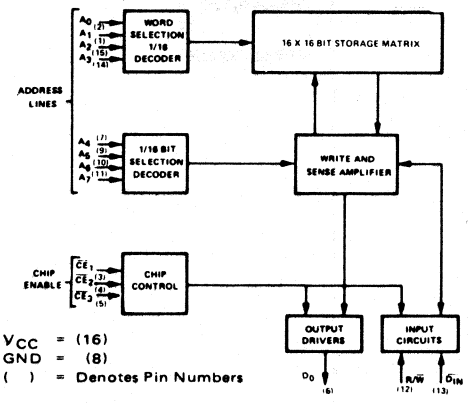

V_{CC} = (16)
GND = (8)
( ) = Denotes Pin Numbers

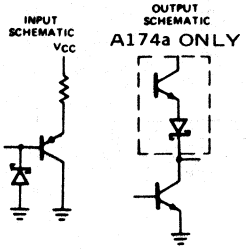

"ONE" LEVEL IN ON DATA INPUT APPEARS AS "ZERO" LEVEL OUT. Chip is enabled when $\overline{CE}_1 = \overline{CE}_2 = \overline{CE}_3 =$ "0"

A174 See PN 16y

A175

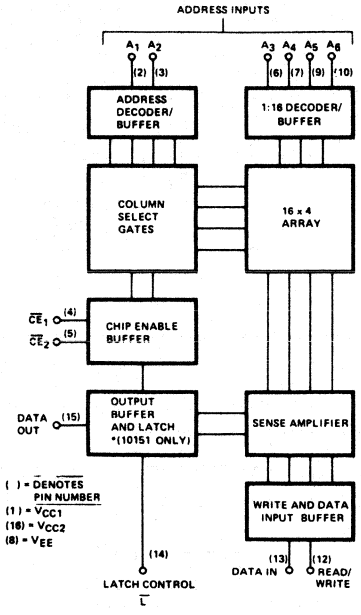

A175a — PIN 14 N.C.

A176

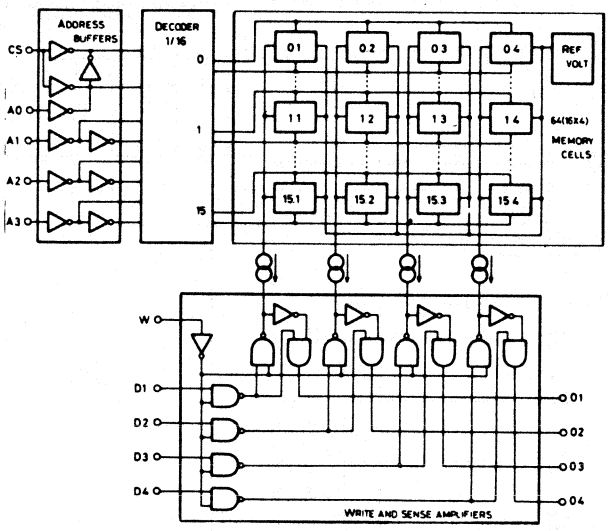

A177

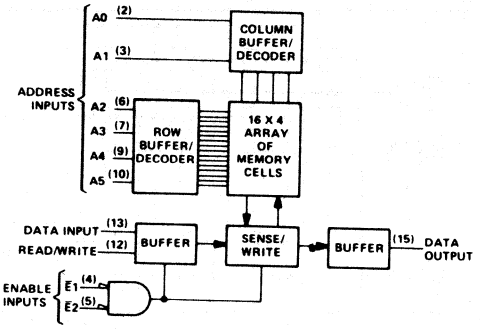

A178

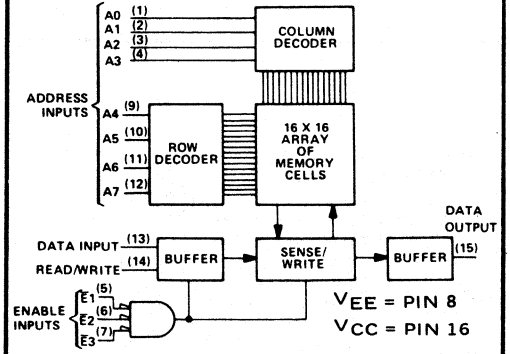

A180

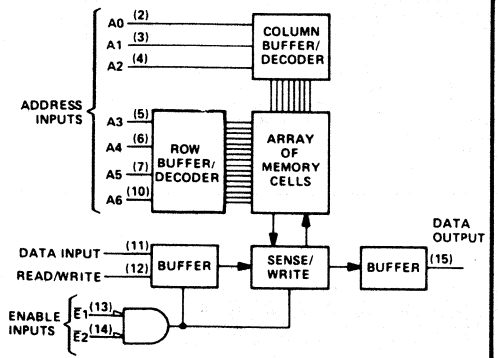

A181

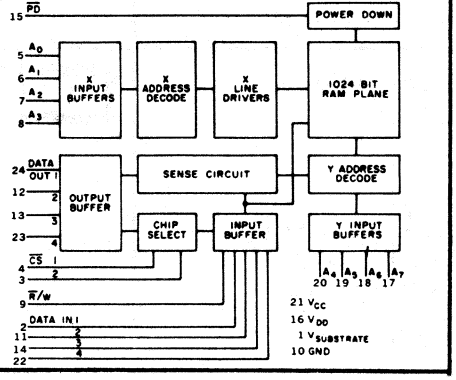

A182

A182 See PN 16z

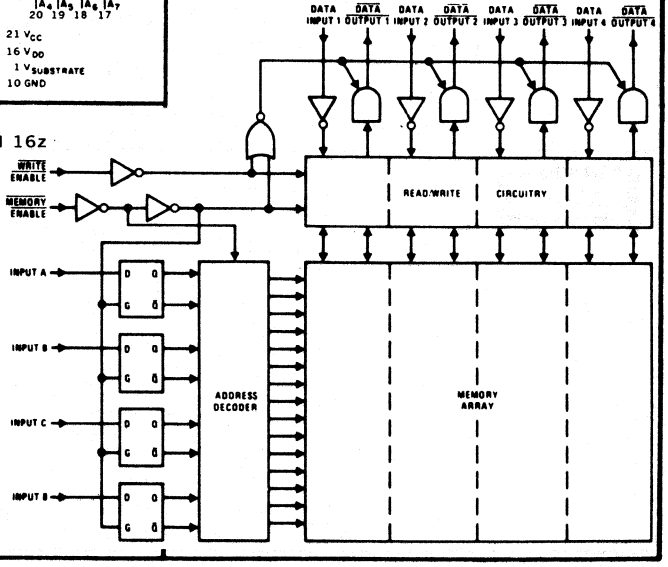

22. LOGIC/BLOCK DRAWINGS

IN DRAWING NUMBER SEQUENCE

A183

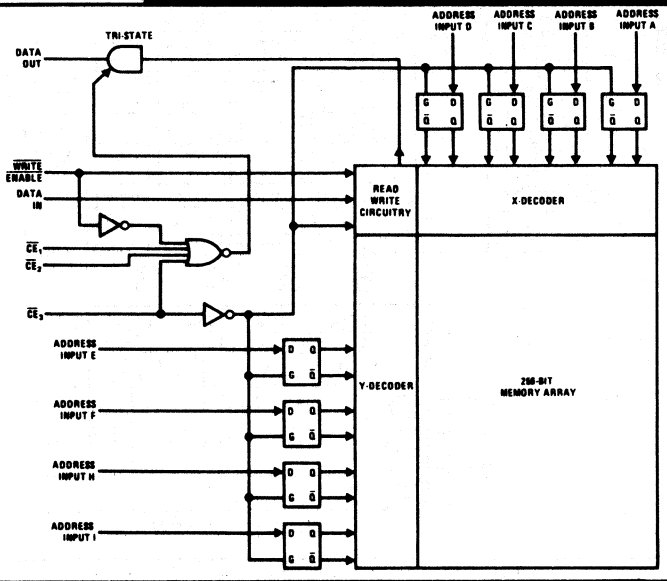

A194

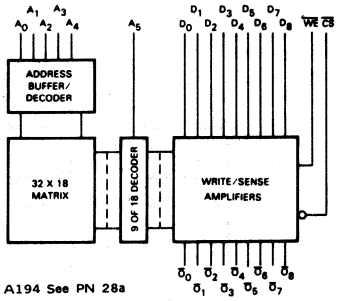

A194 See PN 28a

A184

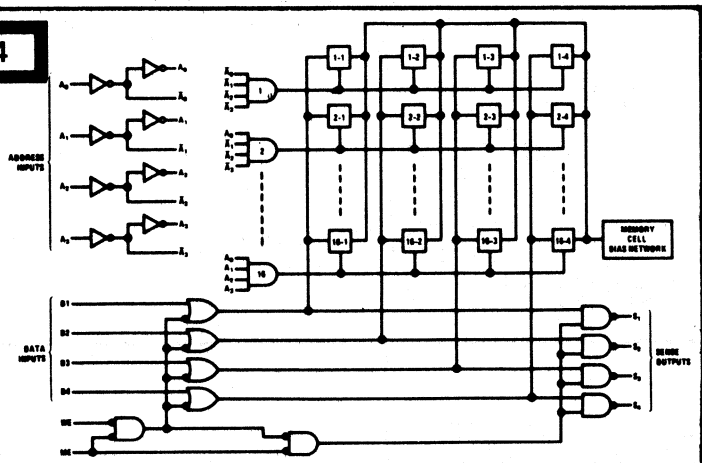

A186

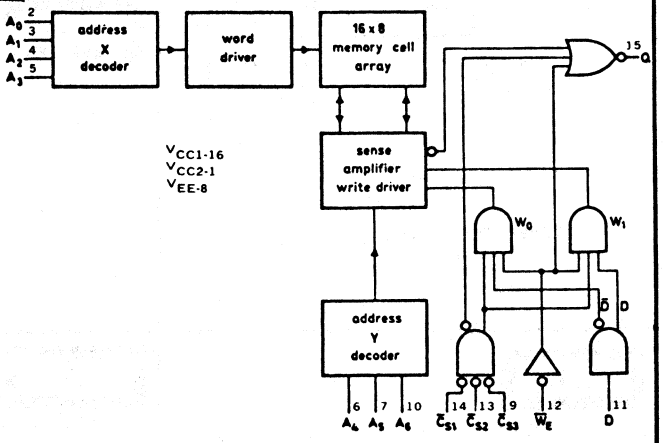

A188

A188a FUNCTIONS AS IF CS_1, CS_2, AND CS_3 WERE TIED TOGETHER.

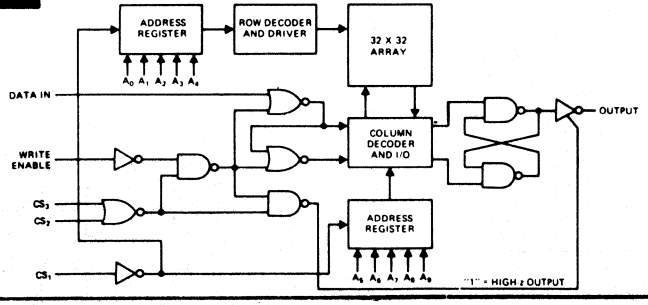

A191

A191 See PN 16ac

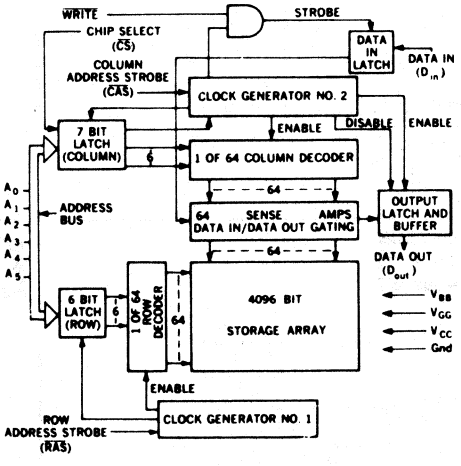

A189

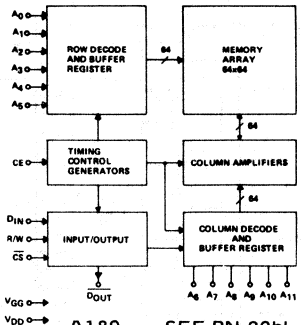

A189 SEE PN 22bl

A189a SEE PN 22bk

	PIN NUMBERS																			
	1	2	3	4	5	6	7	8	9	10	11	12	13	14	15	16	17	18	19	20	21	22
A189	VBB	A9	A10	A11	CS	DIN	DOUT	A0	A1	A2	VDD	R/W	A3	A4	A5	NC	CE	VGG	A6	A7	A8	VSS
A189a	VBB	A9	A10	A11	CS	DIN	DOUT	A0	A1	A2	VCC	WE	A3	A4	A5	NC	CE	VDD	A6	A7	A8	VSS

22. LOGIC/BLOCK DRAWINGS

IN DRAWING NUMBER SEQUENCE

A196

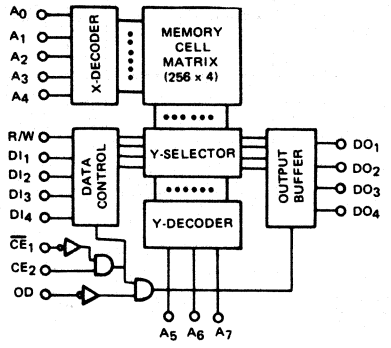

A200

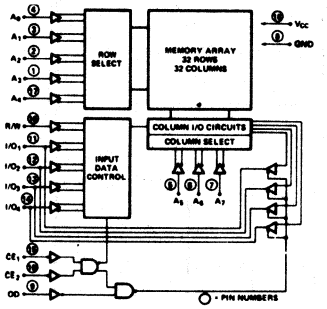

A201

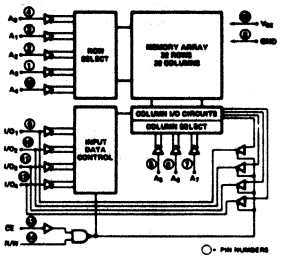

A202

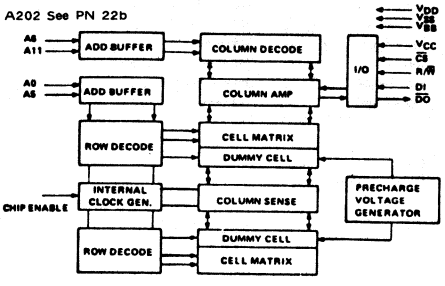

A204

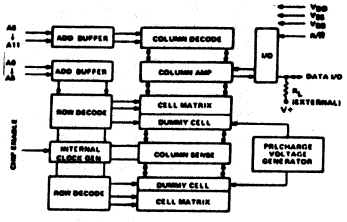

A205

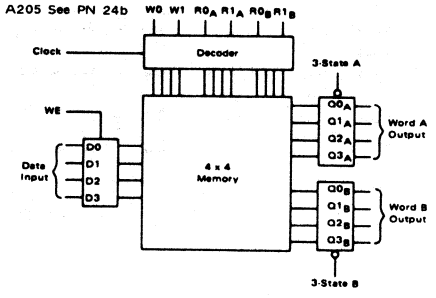

A208

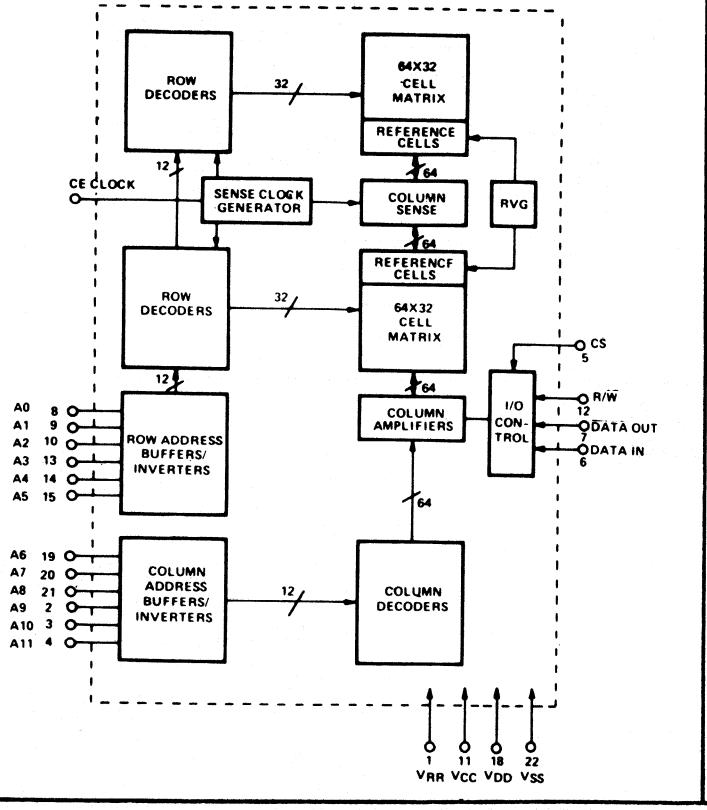

A209

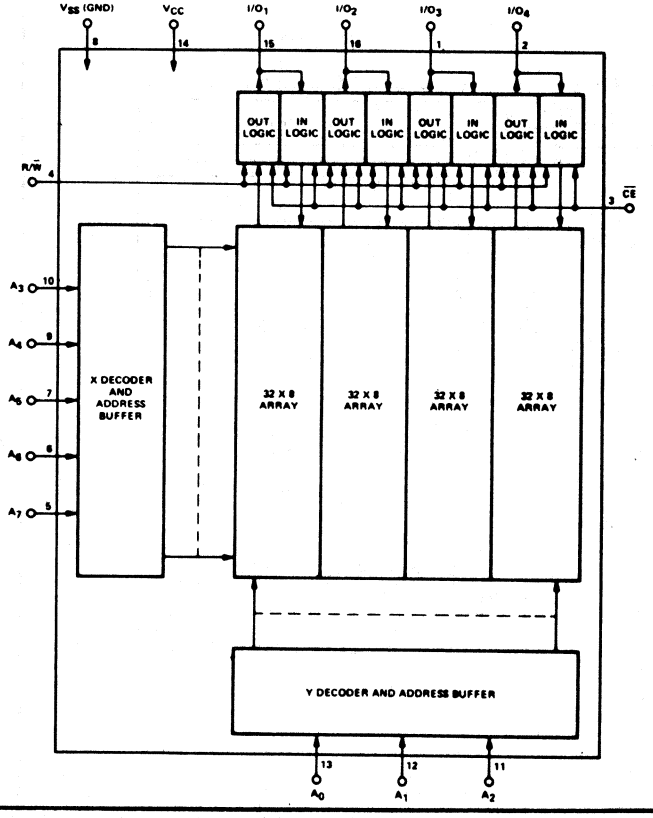

22. LOGIC/BLOCK DRAWINGS

IN DRAWING NUMBER SEQUENCE

A210

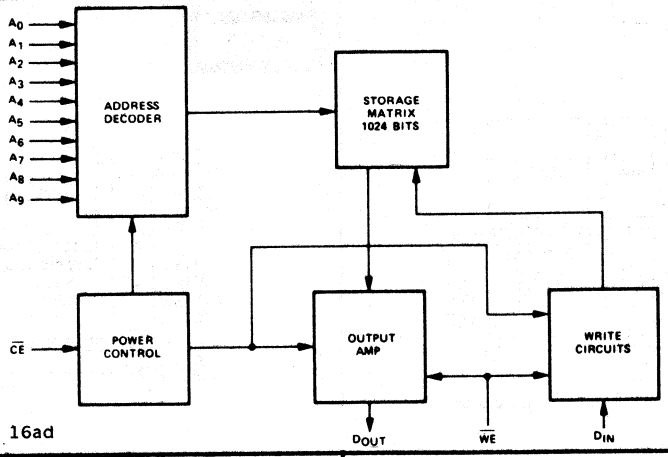

A210 See PN 16ad

A213

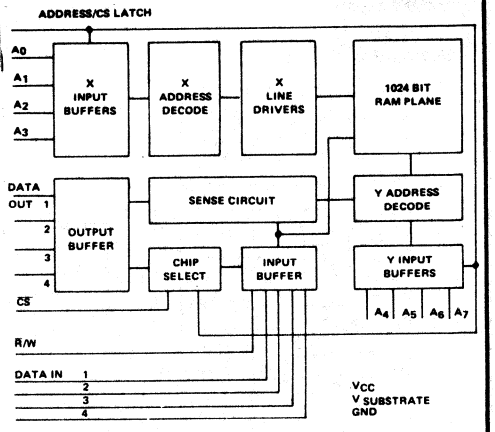

A222

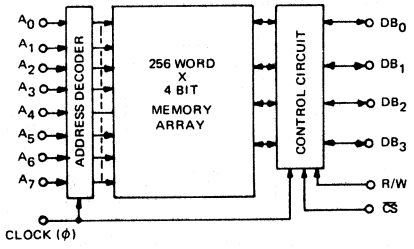

A223

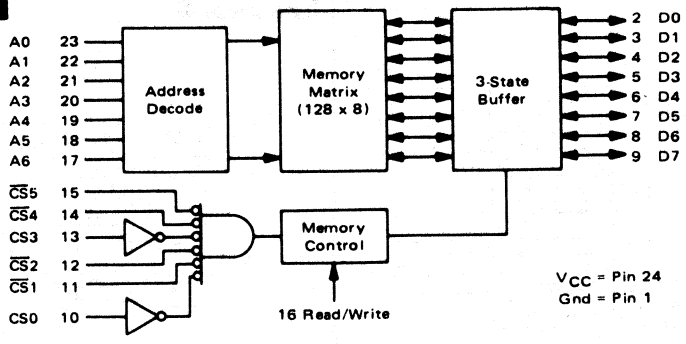

A232

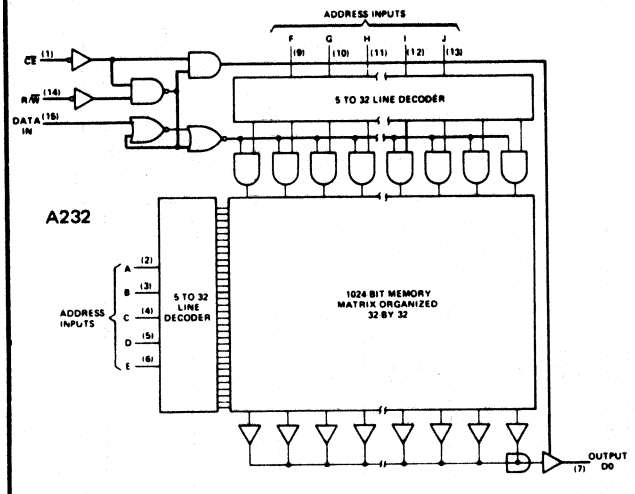

SAME AS ABOVE EXCEPT OUTPUT IS AS SHOWN BELOW.

A232a

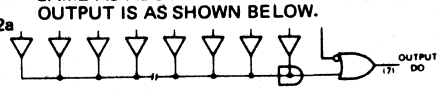

A233

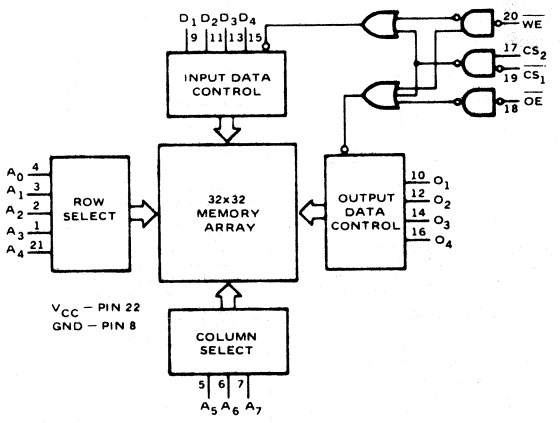

A240

A240 See PN 16ae

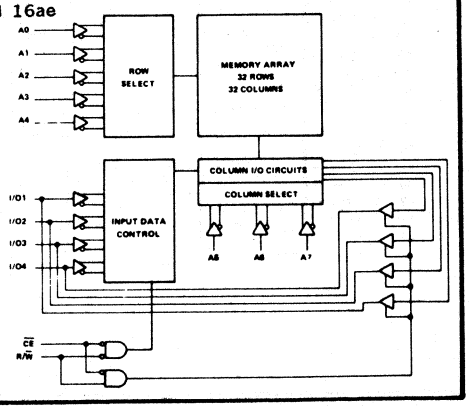

22. LOGIC/BLOCK DRAWINGS

IN DRAWING NUMBER SEQUENCE

A242

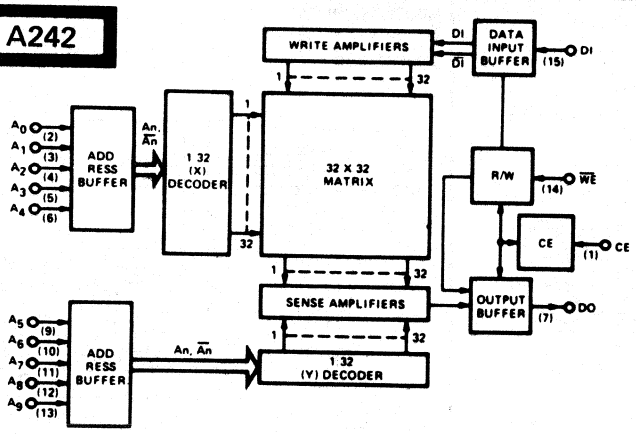

A243

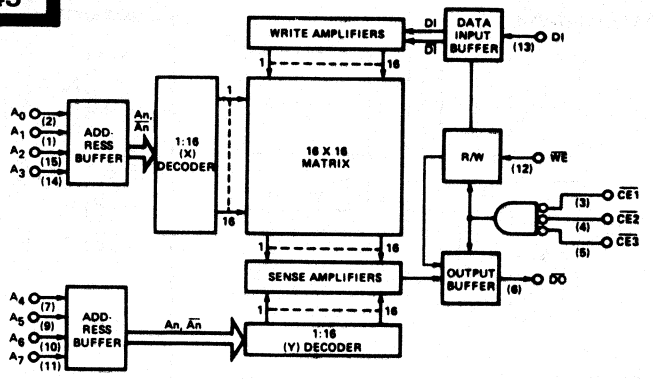

A247

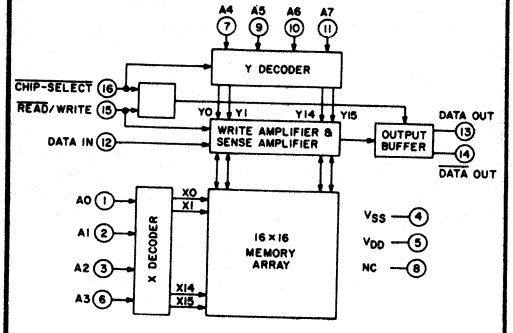

A256

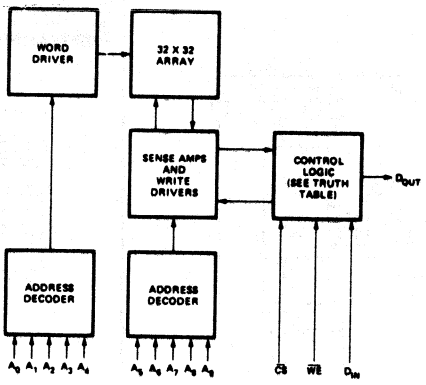

A264

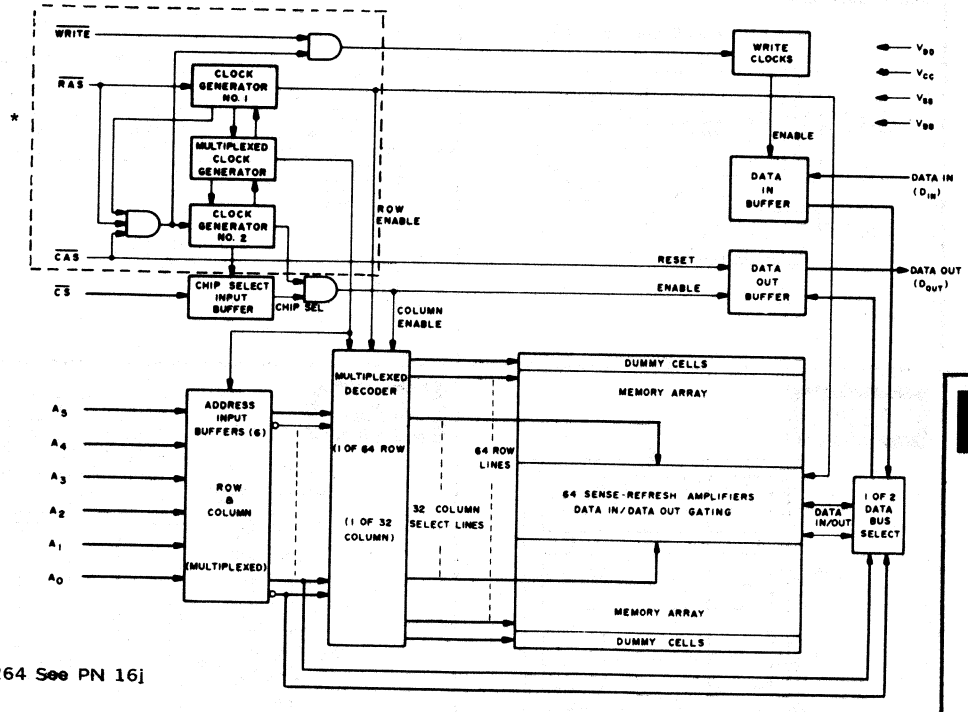

A264 ~~See~~ PN 16j

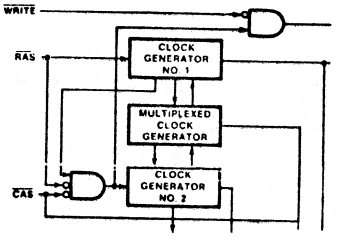

* REPLACE SECTION IN DOTTED LINES FOR A264a.

22. LOGIC/BLOCK DRAWINGS

IN DRAWING NUMBER SEQUENCE

A265

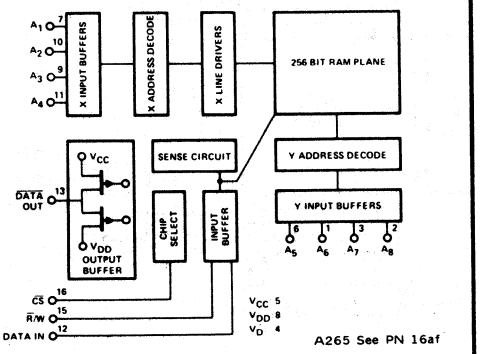

A265 See PN 16af

A267

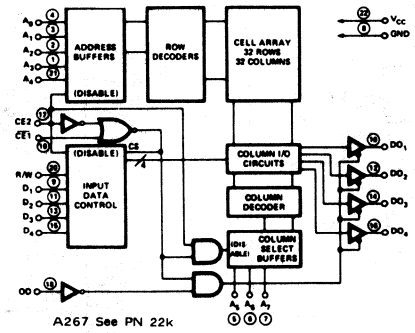

A267 See PN 22k

FOR A267a ONLY: PIN 8 = V_{SS}

○ = PIN NUMBERS

A268

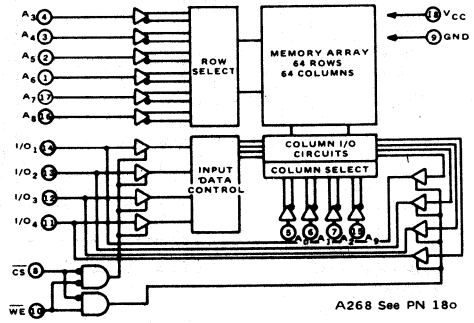

A268 See PN 18o

A269

A269 See PN 16ah

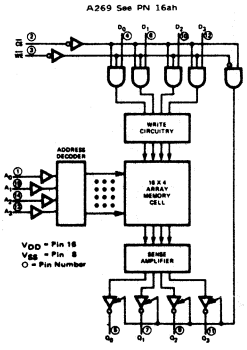

A269 See PN 16ah

A270

A270 See PN 8p

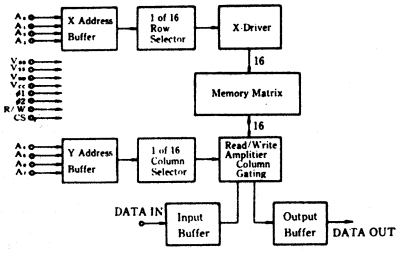

A277

A277 See PN 16ah

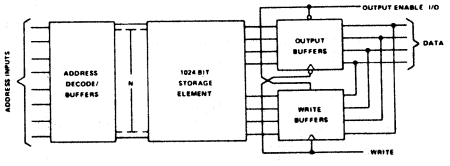

A279

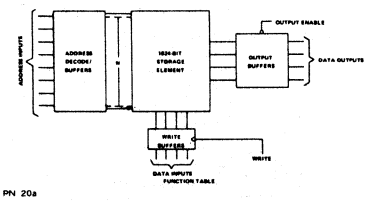

A279 See PN 20a

A279 See PN 20a

A280

A280 See PN 18m

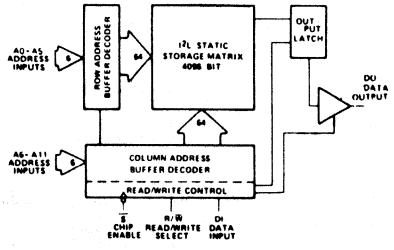

A284

A284a See PN 22p

A284b See PN 22q

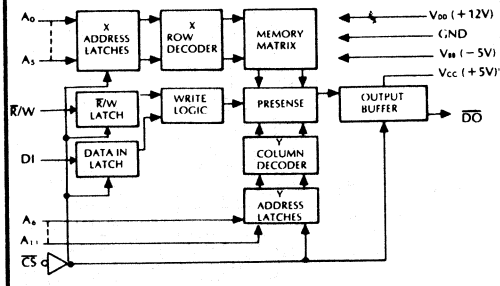

A288

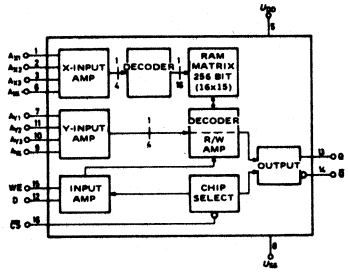

A289

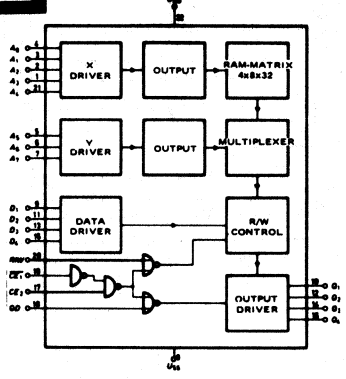

A290

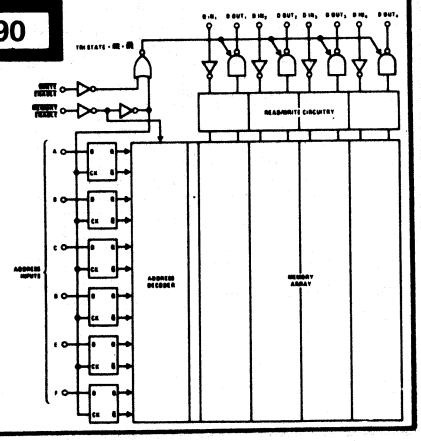

22. LOGIC/BLOCK DRAWINGS

IN DRAWING NUMBER SEQUENCE

A291

A291 See PN 22t
A291a See PN 22t

A 291a See PN 18t

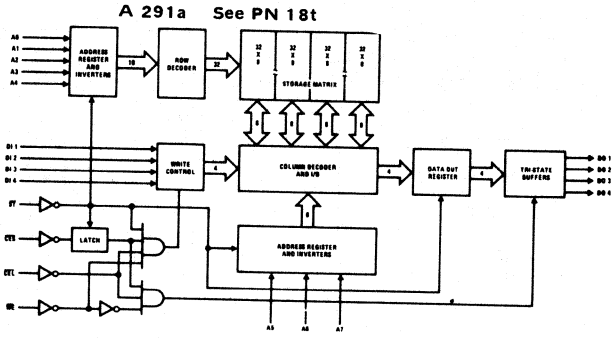

A293

A293 See PN 22m

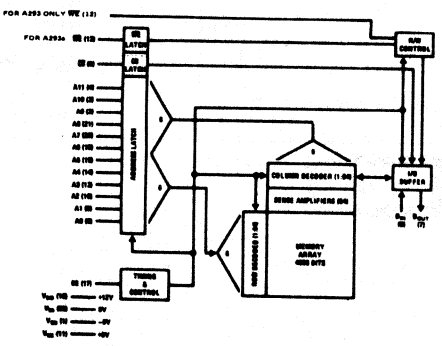

A294

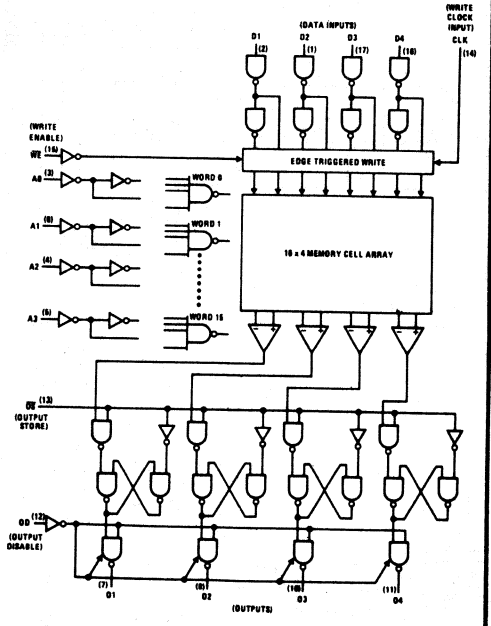

A296

A296 See PN 18u

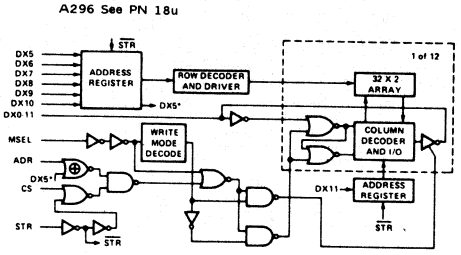

A297

A297 See PN 22u

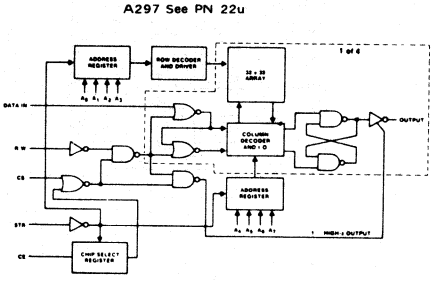

A298

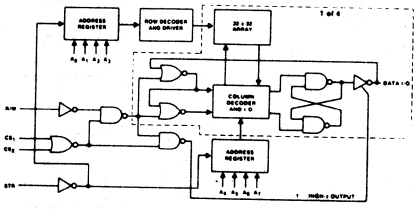

A298 See PN 18v

A300

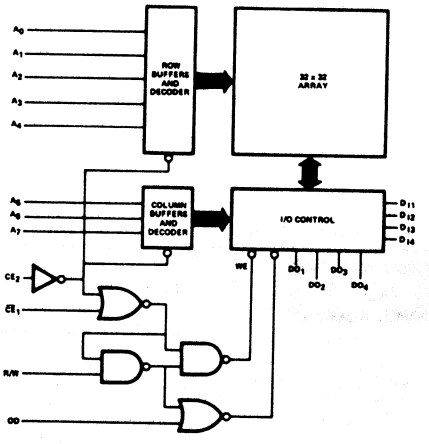

A300 See PN 22k

OD = OUTPUT DISABLE
WE = WRITE ENABLE

A302

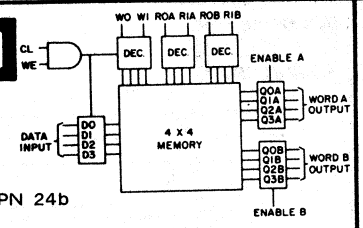

A302 See PN 24b

A303

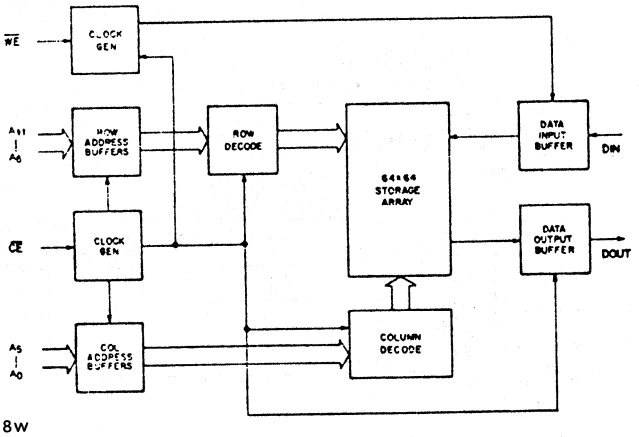

A303 See PN 18w

A305

A305 See PN16as

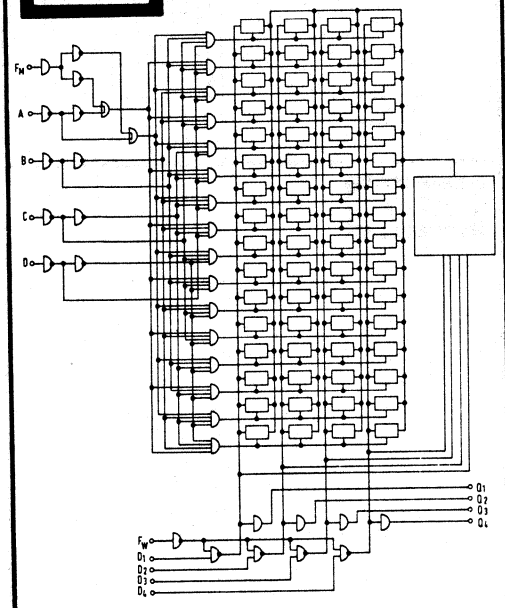

A306

A306 See PN 14c
A306a See PN 16ap

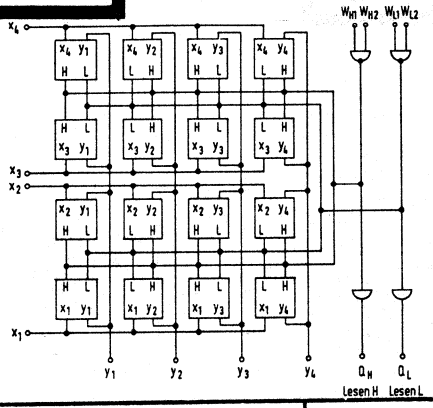

A318

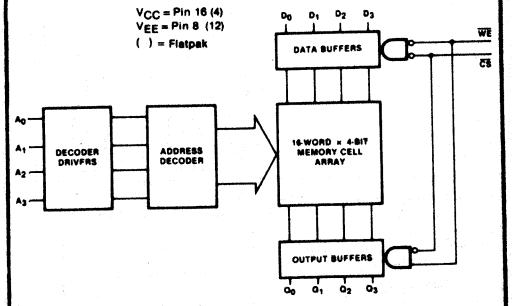

For Flatpak See PN 16ar
For Dip See PN 16as

A314

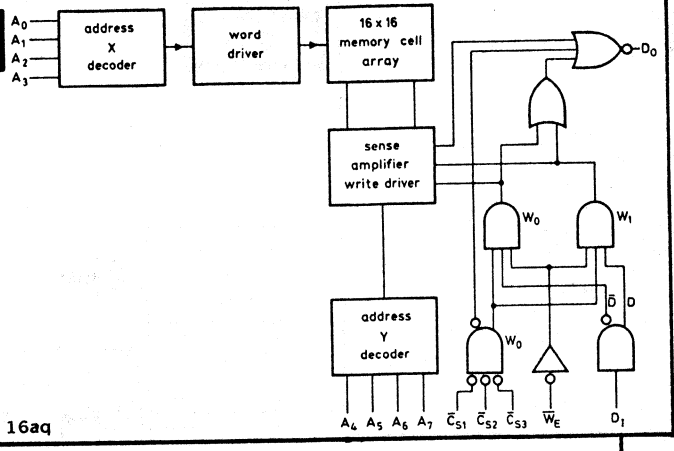

A314 See PN 16aq

A316

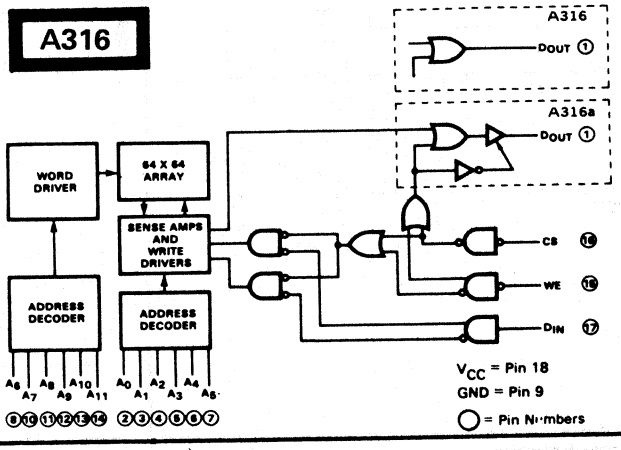

A315

A315 See PN 22w

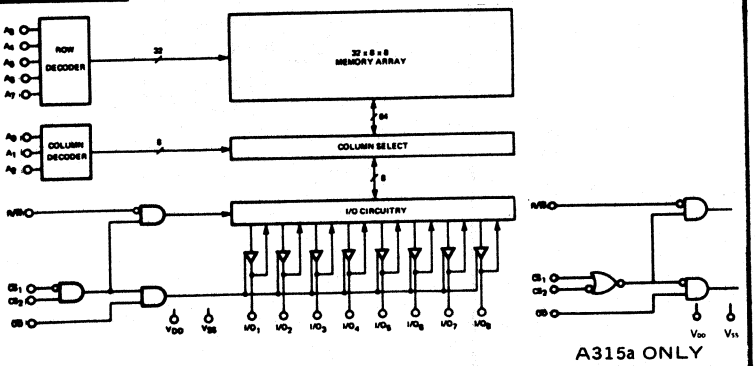

A315a ONLY

A317

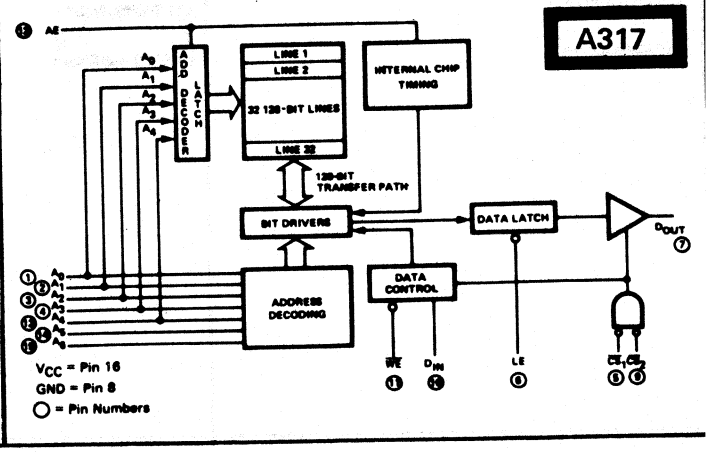

22. LOGIC/BLOCK DRAWINGS

IN DRAWING NUMBER SEQUENCE

A319

A319 SEE PN 18bs
A319a SEE PN 18ah

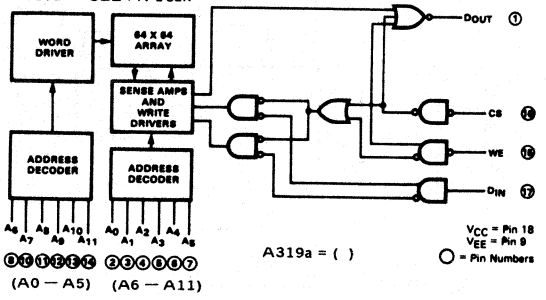

A328

A328 See PN 18

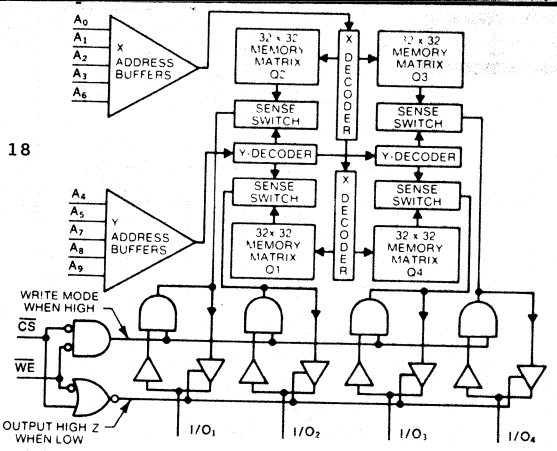

A324

A324 See PN 16j

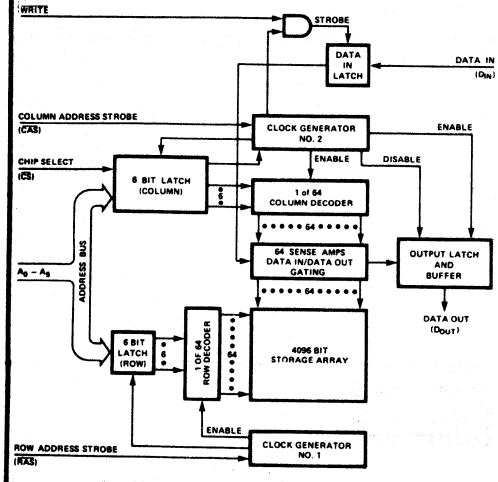

A325

A325 See PN 18y

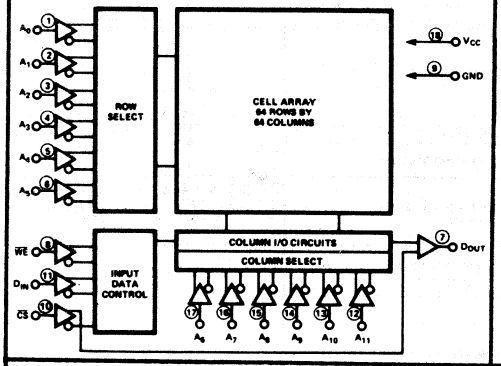

A330

A330 See PN 22ab
A330a See PN 24g

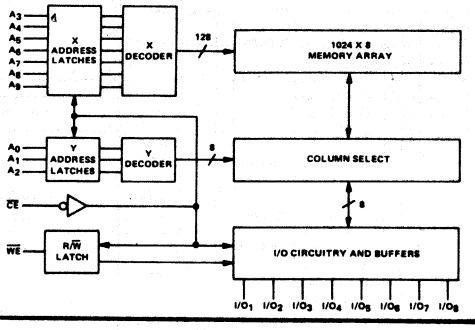

A331

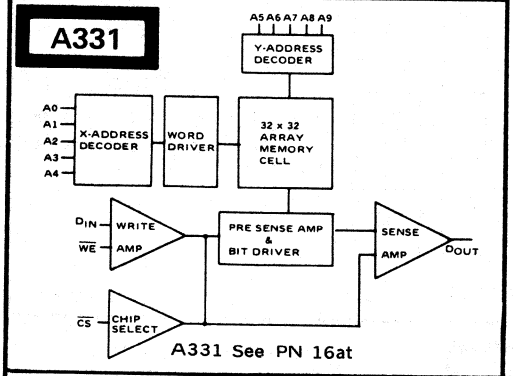

A331 See PN 16at

A333

A333 See PN 16au

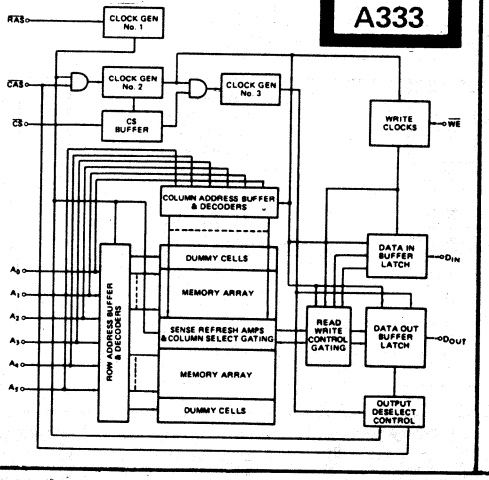

A335

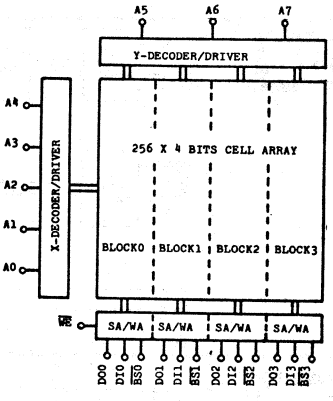

A334

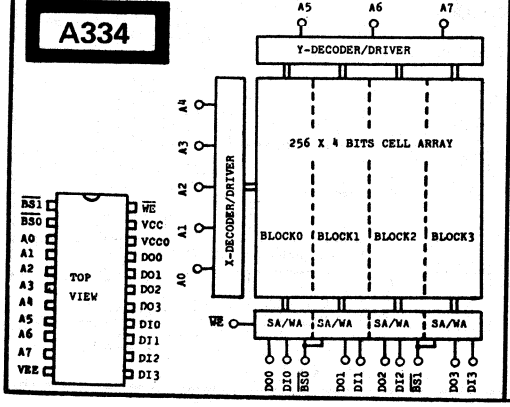

A327

A327 See PN 18 bp

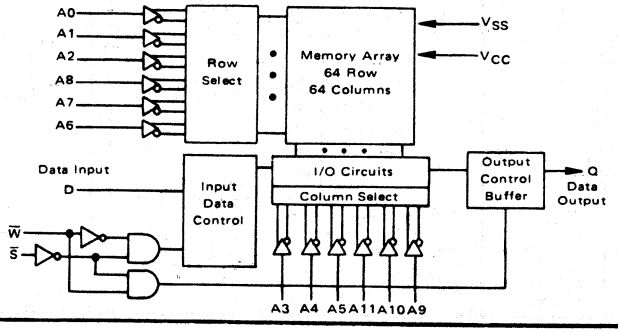

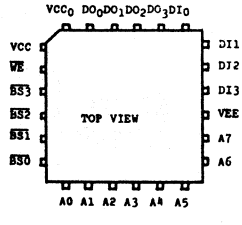

22. LOGIC/BLOCK DRAWINGS

IN DRAWING NUMBER SEQUENCE

A339

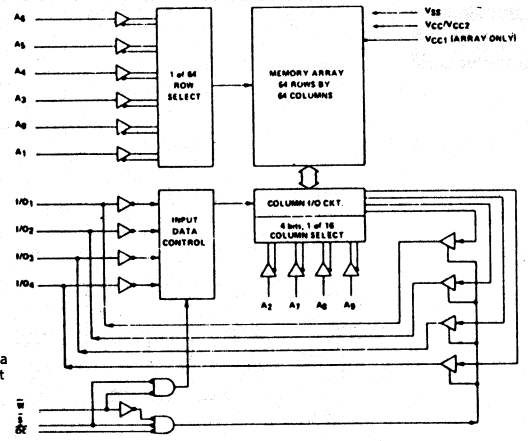

A339 See PN 18aa
A339a See PN 20t

A342

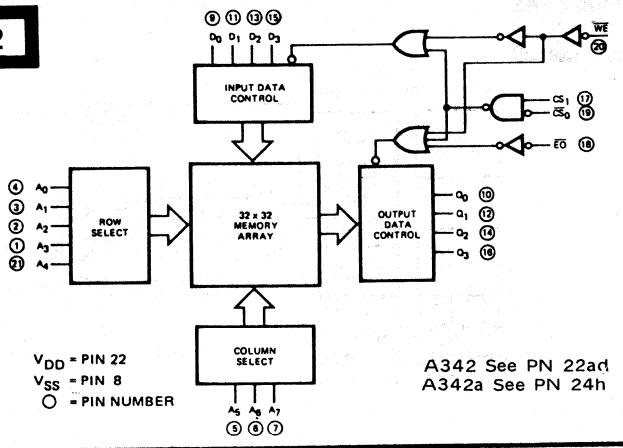

V_{DD} = PIN 22
V_{SS} = PIN 8
○ = PIN NUMBER

A342 See PN 22ad
A342a See PN 24h

A340

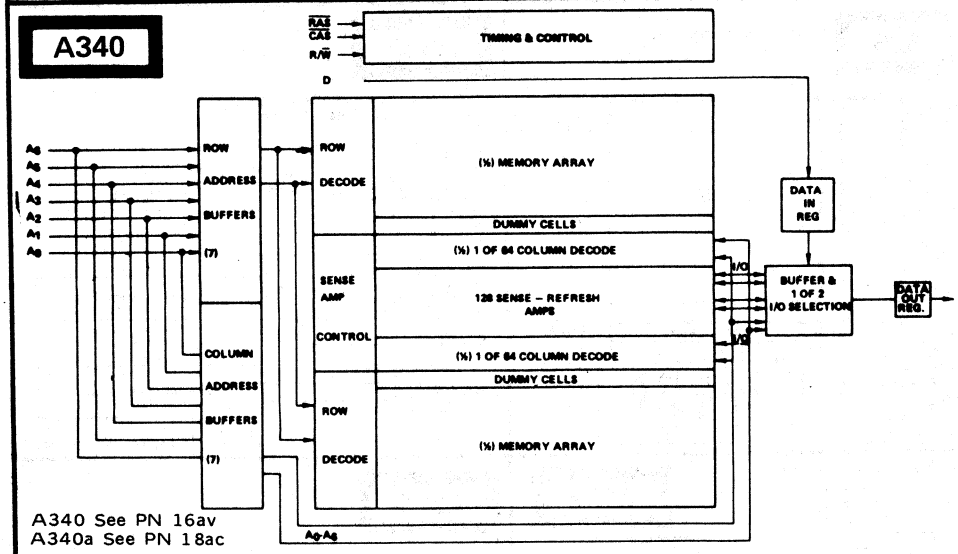

A340 See PN 16av
A340a See PN 18ac

A344

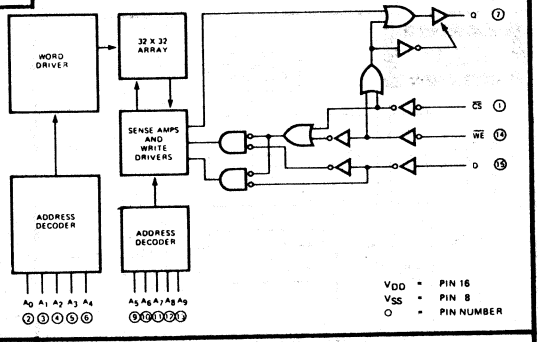

V_{DD} = PIN 16
V_{SS} = PIN 8
○ = PIN NUMBER

A341

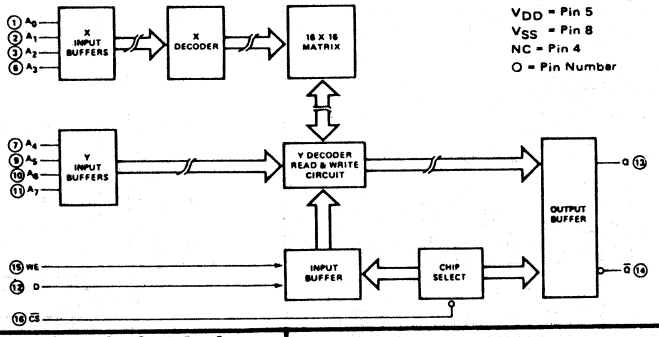

V_{DD} = Pin 5
V_{SS} = Pin 8
NC = Pin 4
○ = Pin Number

A343

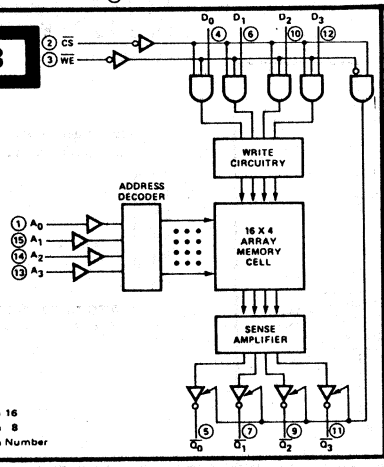

V_{DD} = Pin 16
V_{SS} = Pin 8
○ = Pin Number

A345

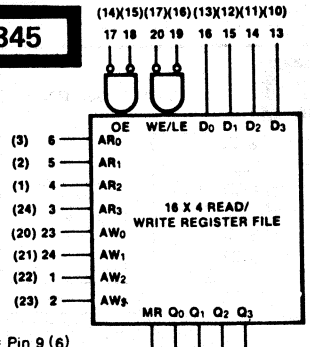

V_{CC} = Pin 9 (6)
V_{CCA} = Pin 10 (18)
V_{EE} = PIN 21 (7)

A345 See PN 24i
A345a See PN 24j

A347

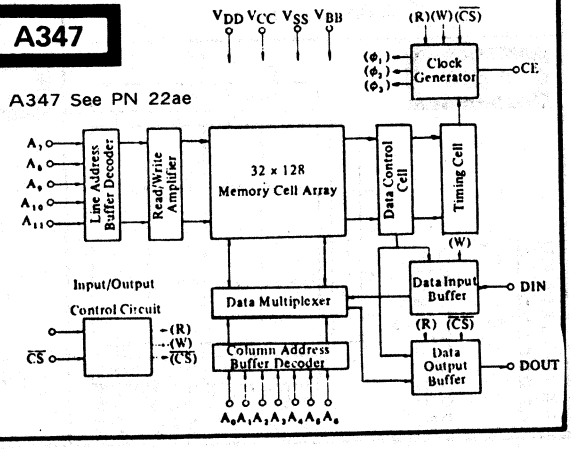

A347 See PN 22ae

A348

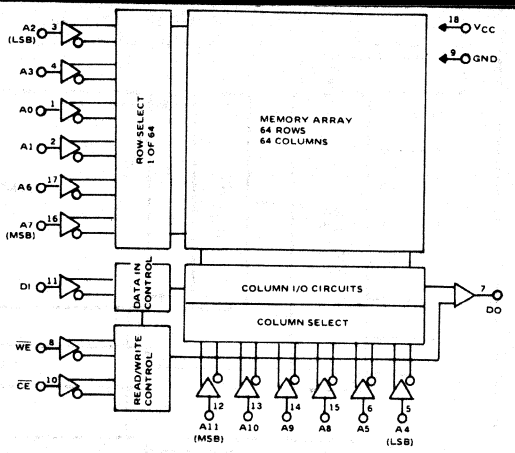

A350

A350 See PN 16ax

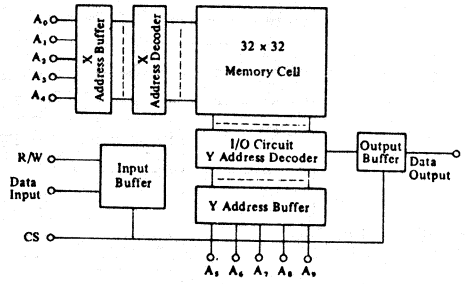

A351

A351 See PN 16ag

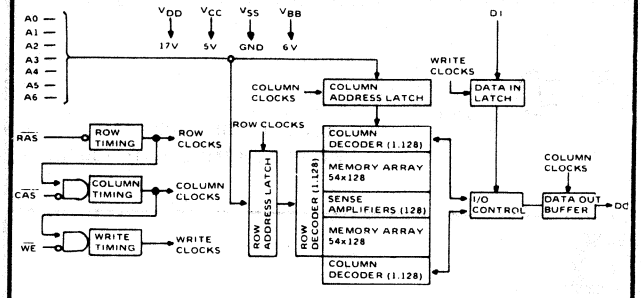

A352

A352 See PN 16m
A352a See PN 18ad

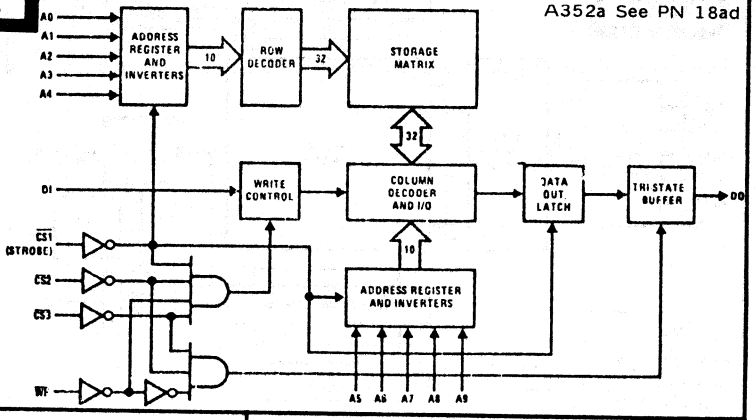

A354

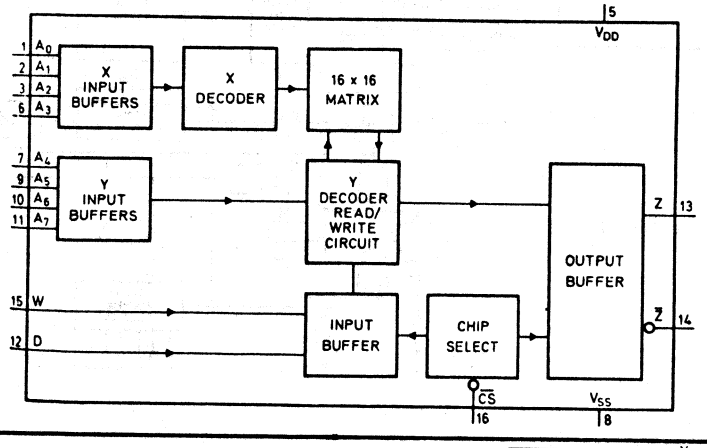

A362

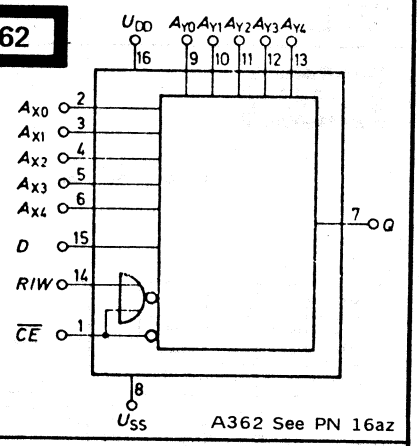

A362 See PN 16az

A356

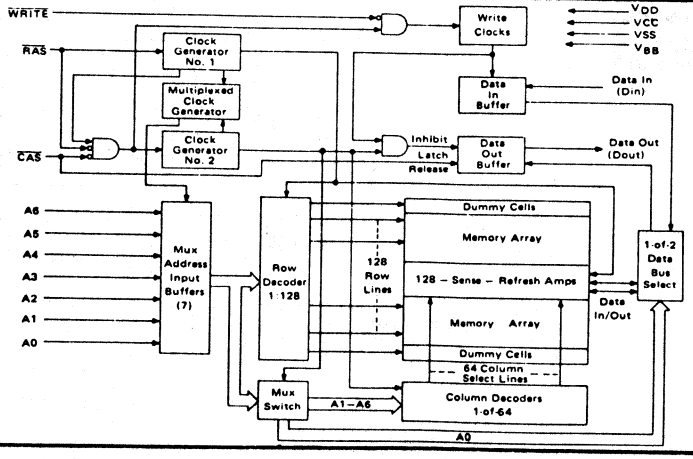

A356 See PN 16k

22. LOGIC/BLOCK DRAWINGS

IN DRAWING NUMBER SEQUENCE

A366

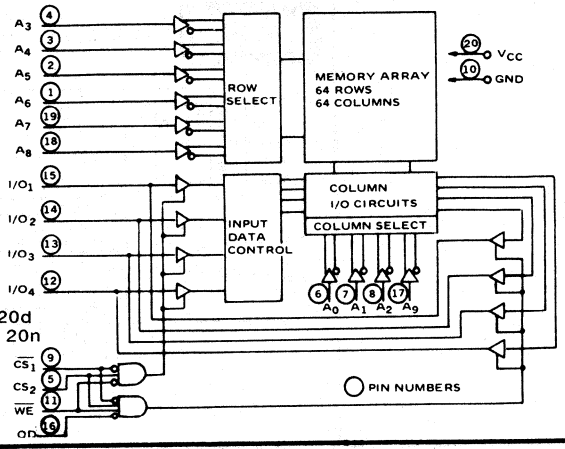

A366 See PN 20d
A366a See PN 20n

A367

A367 See PN 22ag
A367b See PN 24m

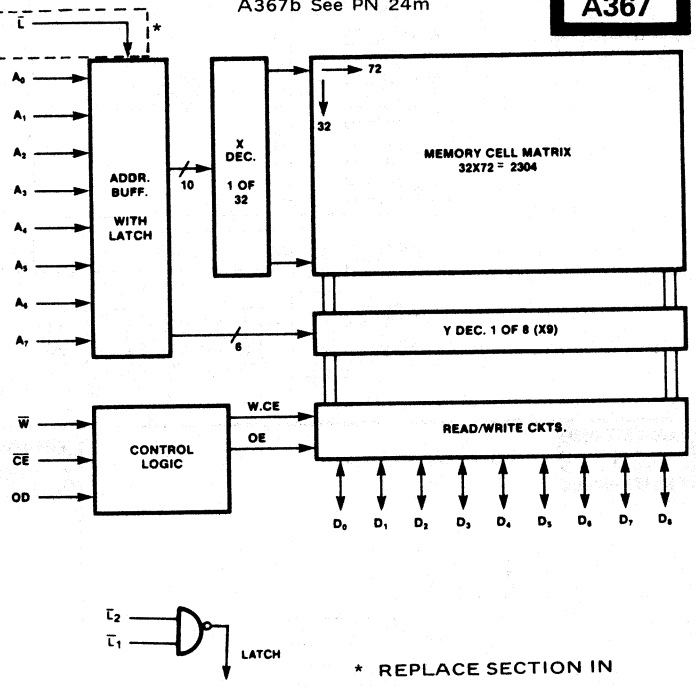

A368

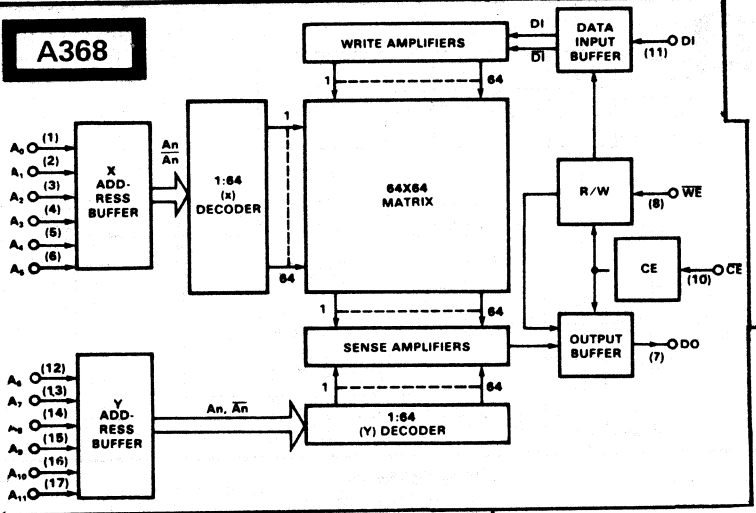

A371

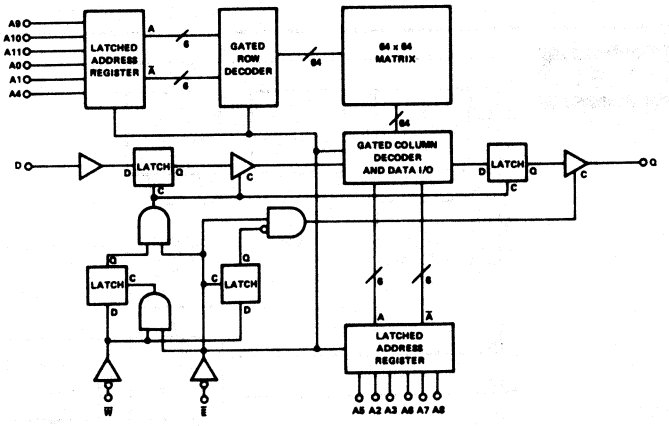

A371 See PN 18af

A372

A372 See PN 18ag

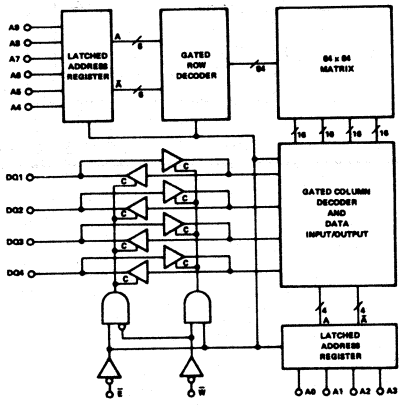

A373

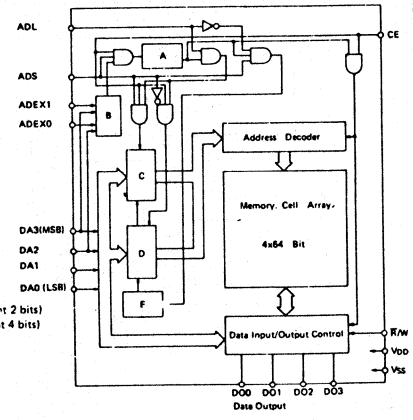

A: Internal chip select
B: Coincidence circuit
C: Address latch group 2 (most significant 2 bits)
D: Address latch group 1 (least significant 4 bits)
E: Address + 1

22. LOGIC/BLOCK DRAWINGS

IN DRAWING NUMBER SEQUENCE

A374

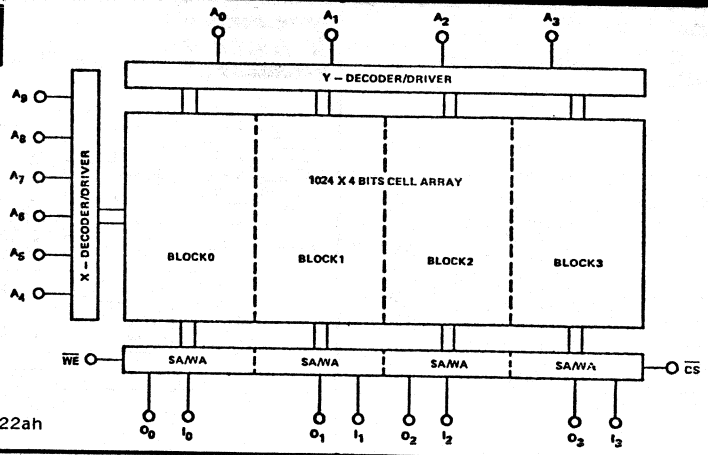

A374 See PN 22ah

A377

AN	Address Inputs
I/ON	Data Input/Output
$\overline{CS}$	Chip Select
$\overline{WE}$	Write Enable
Vcc	+5 V Power Supply

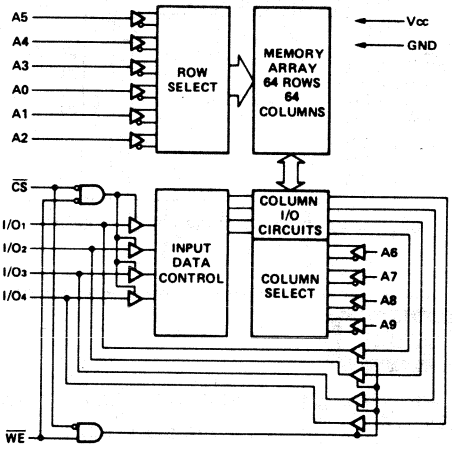

A377 See PN 18o

A379

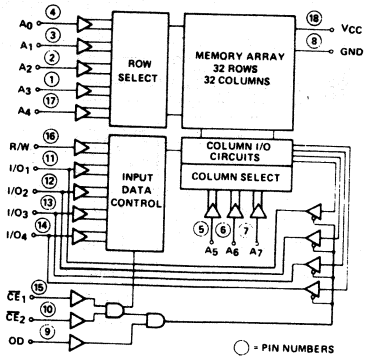

A385

A385a See PN 16s

A385 See PN 16bb

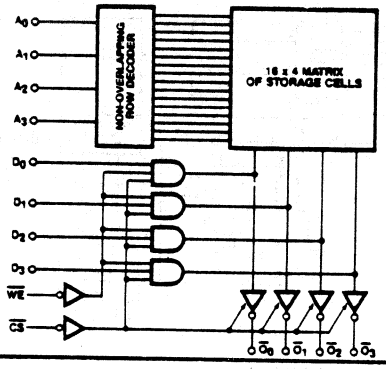

A382

A382 See PN 16s

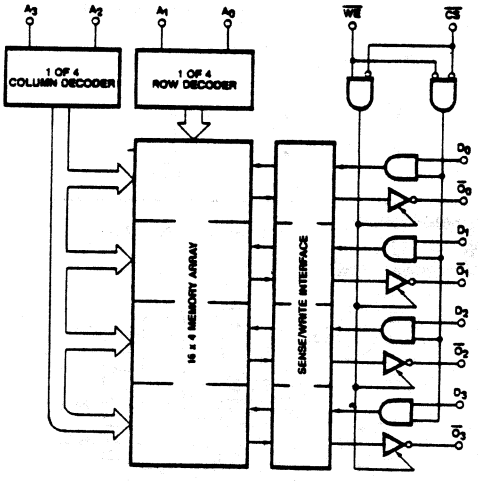

A384

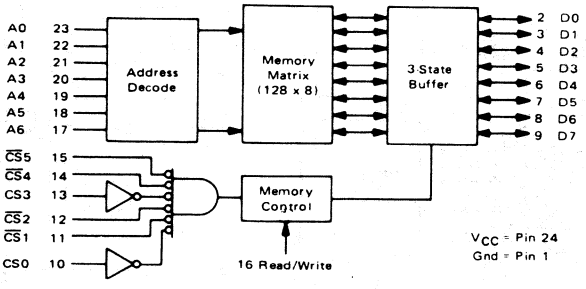

A393

A393 See PN 16be

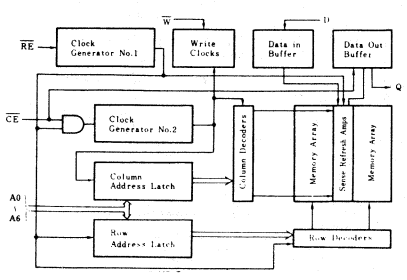

A394

A394 See PN 18o

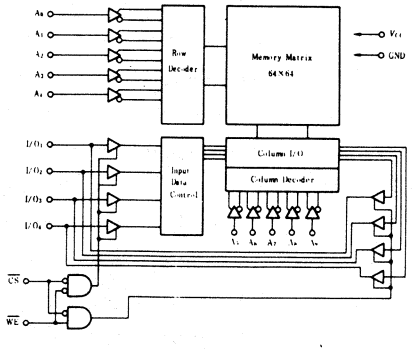

A396

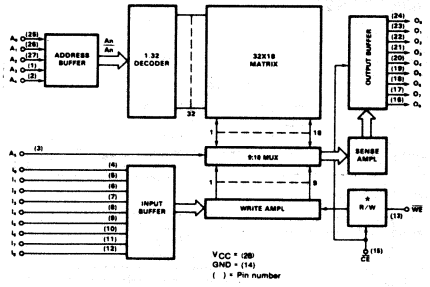

* REPLACE WITH CONTROL LOGIC FOR A396a.

22. LOGIC/BLOCK DRAWINGS

IN DRAWING NUMBER SEQUENCE

A397

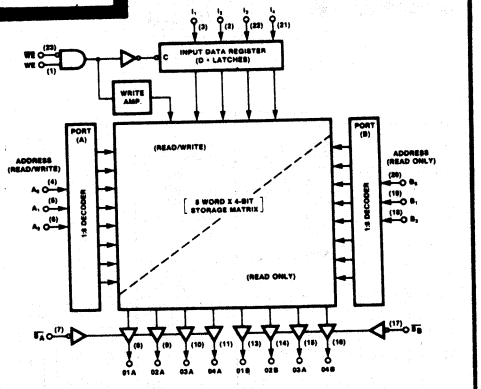

A399

A399 See PN 22aj

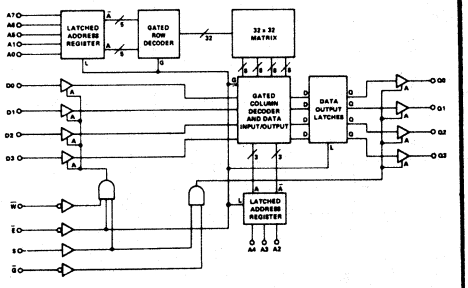

A400

A400 See PN 18ai

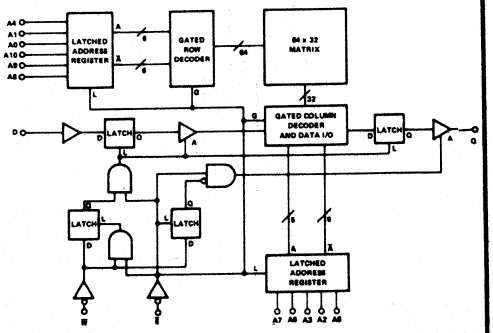

A398

A398 See PN 22ai

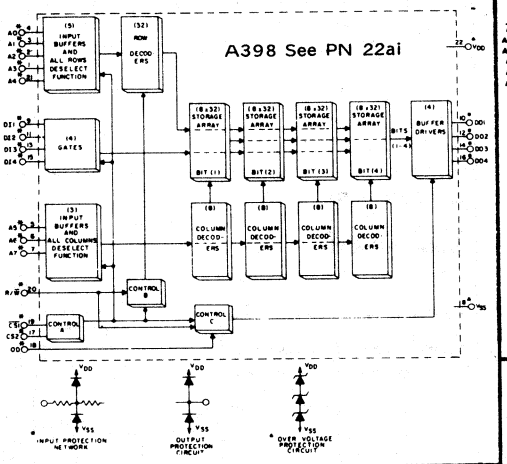

A401

A401 See PN 18aj

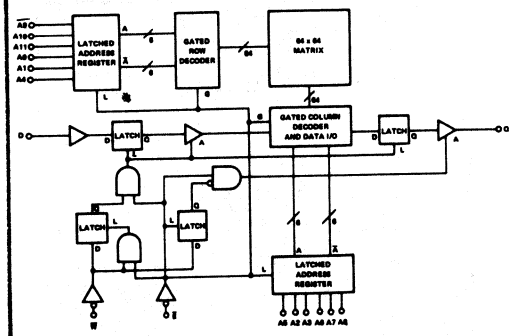

A402

A402 See PN 16bg

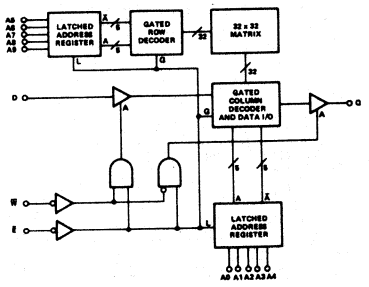

A404

A404 See PN 18ak

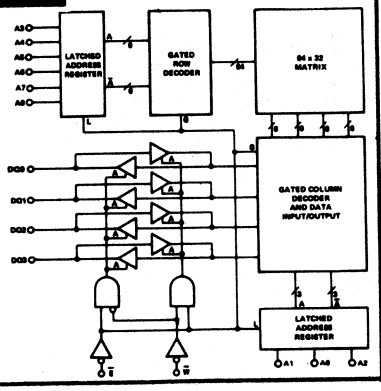

A405

A405 See PN 18am

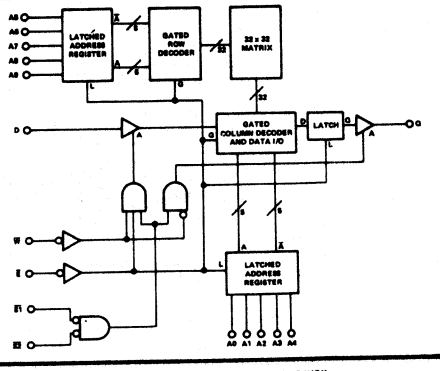

A406

A406 See PN 22ak

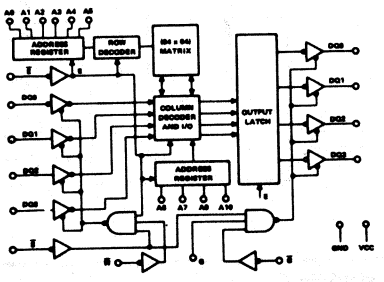

A407

A407 See PN 22am

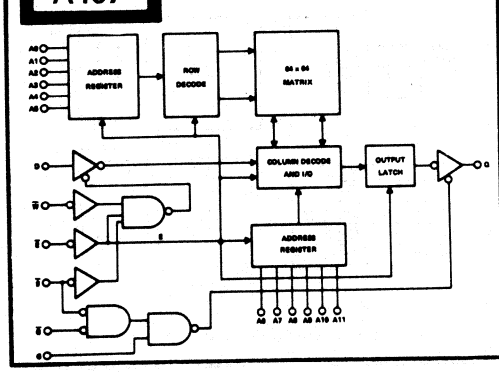

A408

A408 See PN 22an

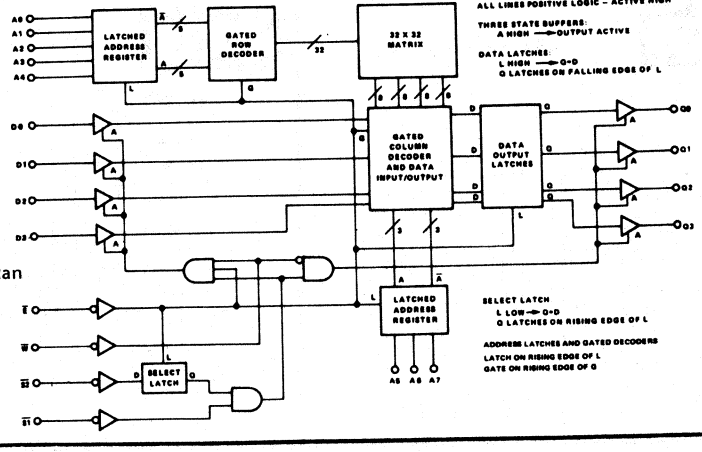

22. LOGIC/BLOCK DRAWINGS

IN DRAWING NUMBER SEQUENCE

A409

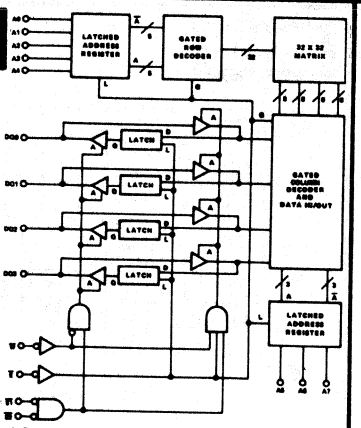

A409 See PN 18an

A410

A410 See PN 16bh

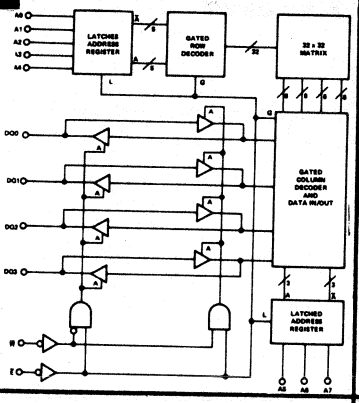

A412

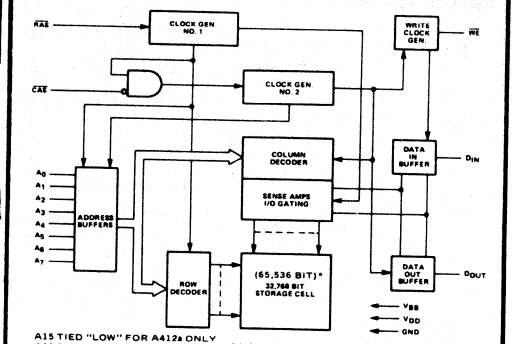

A15 TIED "LOW" FOR A412a ONLY
A15 TIED "HIGH" FOR A412b ONLY * VALUE IN BRACKETS APPLIES TO A412c ONLY
NOTE: A15 IS MULTIPLEXED TO DEVICE PIN A7

A414

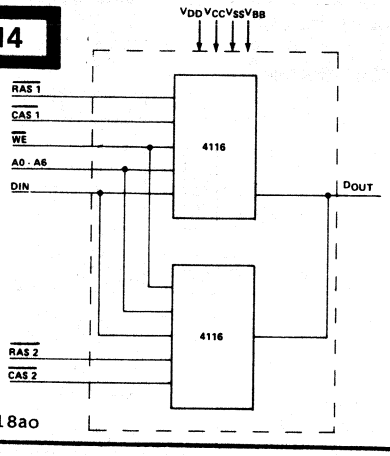

A414
See PN 18ao

A415

A415 See PN 24o

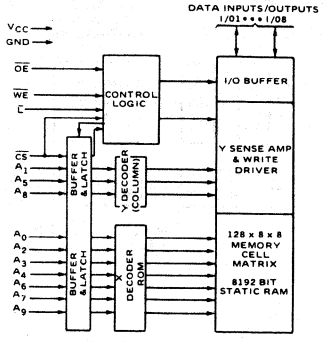

A416

A416 See PN 18ap

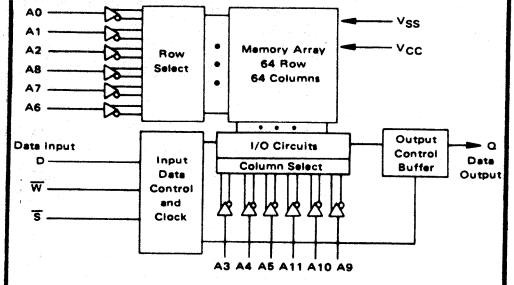

A418

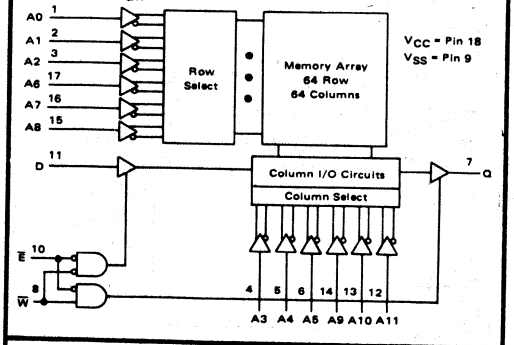

A420

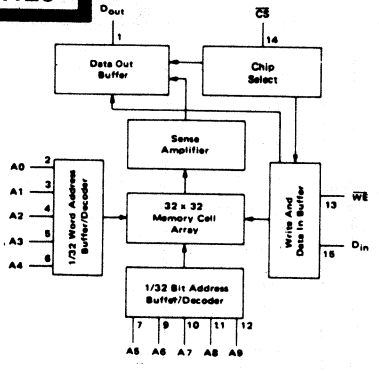

A421

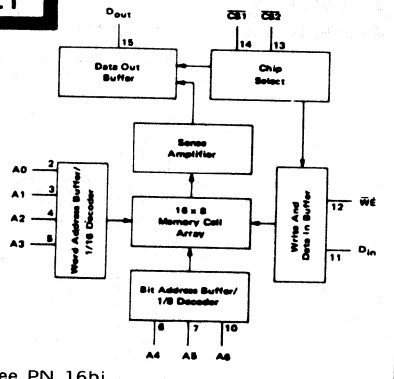

A421 See PN 16bj

A422

A422 See PN 16bk

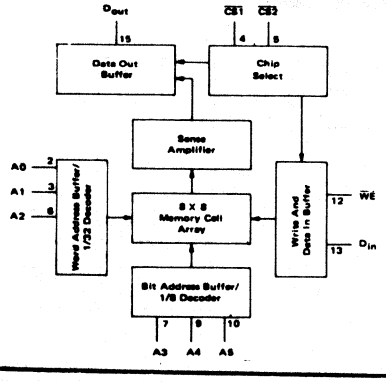

A423

A423 See PN 18aq

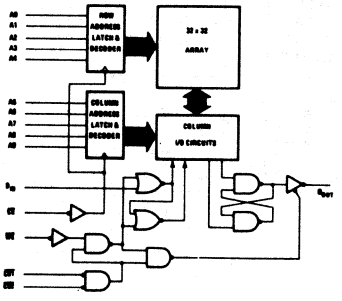

A424

A424 See PN 16bn

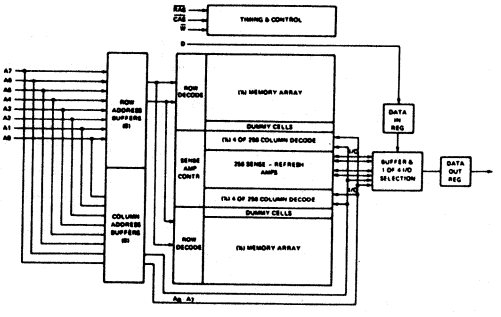

22. LOGIC/BLOCK DRAWINGS

IN DRAWING NUMBER SEQUENCE

A431

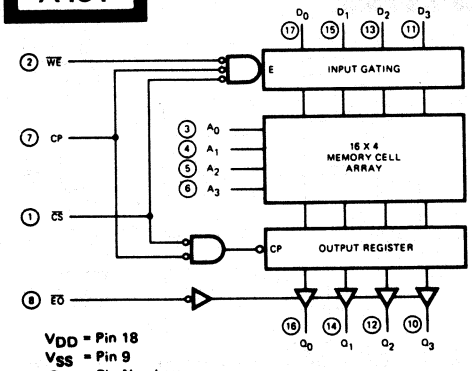

V_{DD} = Pin 18
V_{SS} = Pin 9
○ = Pin Numbers

A432

A432 See PN 16bm

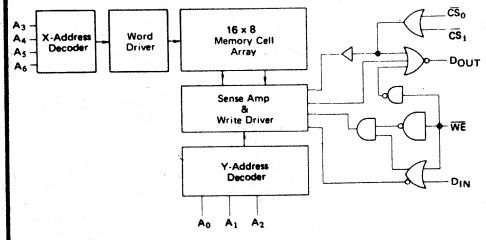

A433

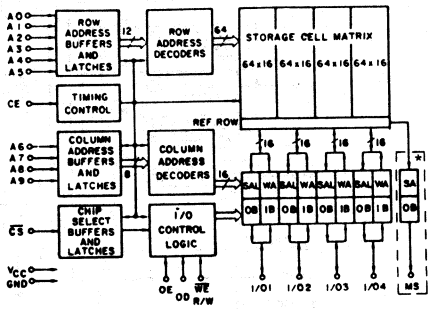

A435

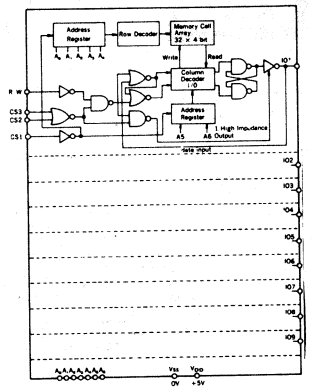

A439

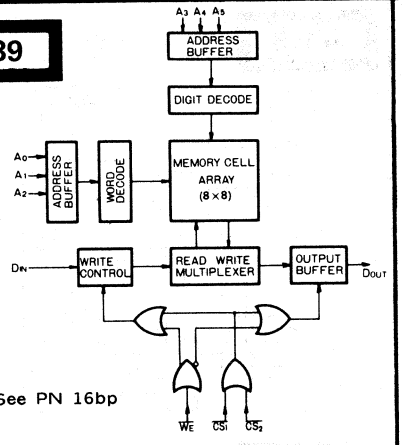

A439 See PN 16bp

A440

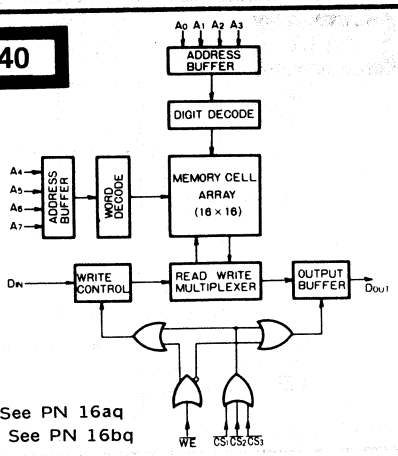

A440 See PN 16aq
A440a See PN 16bq

A437

SEE PN 16he

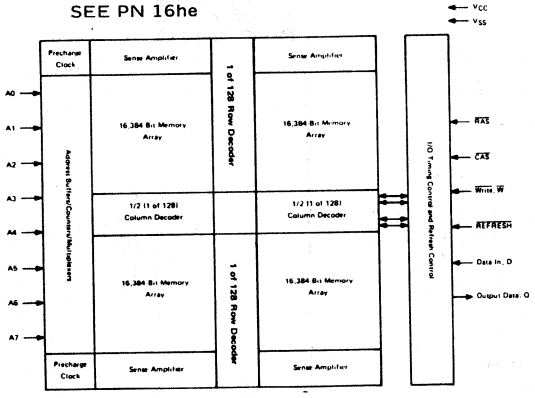

A438

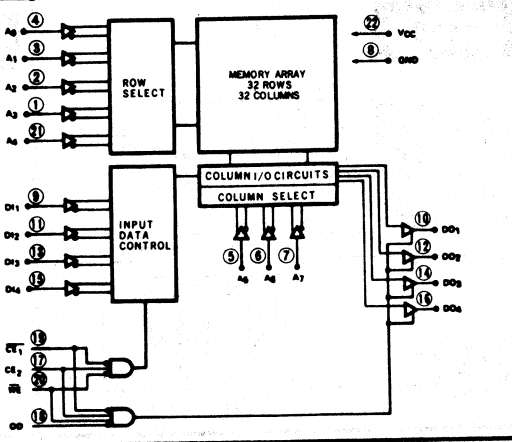

A443

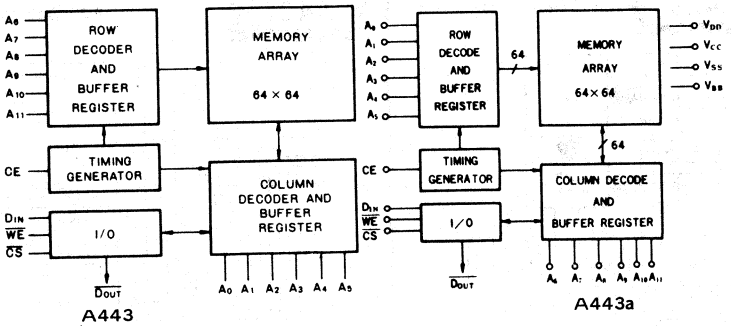

A443 A443a

A443 SEE PN 22m
A443a SEE PN 22bk
A443b SEE PN 18br

A444

A444 See PN 22m

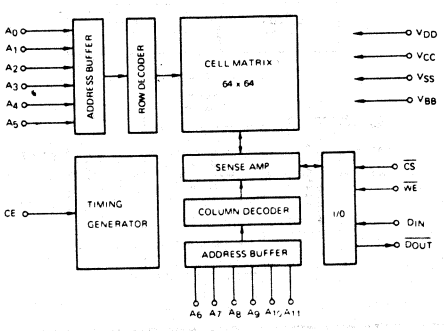

22. LOGIC/BLOCK DRAWINGS

IN DRAWING NUMBER SEQUENCE

A445

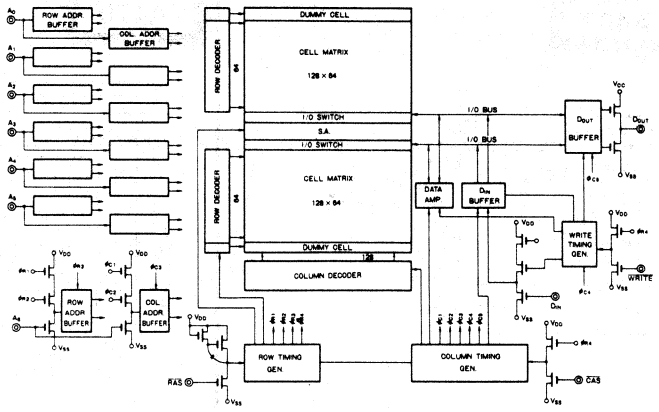

A446

A446 See PN 18e

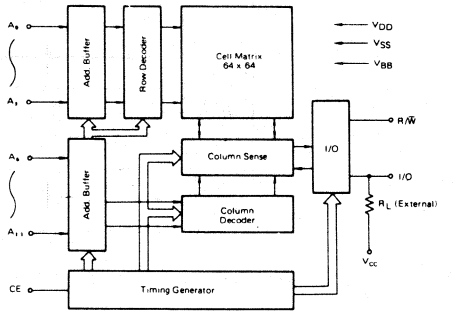

A448

A448 See PN 16e

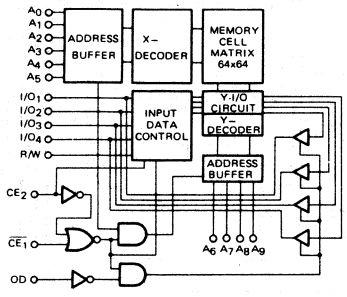

A452

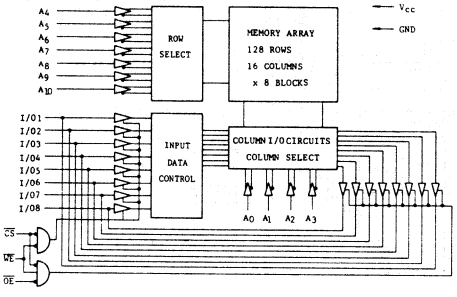

SEE PN 24n

A455

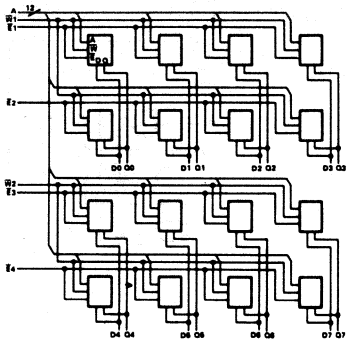

A454

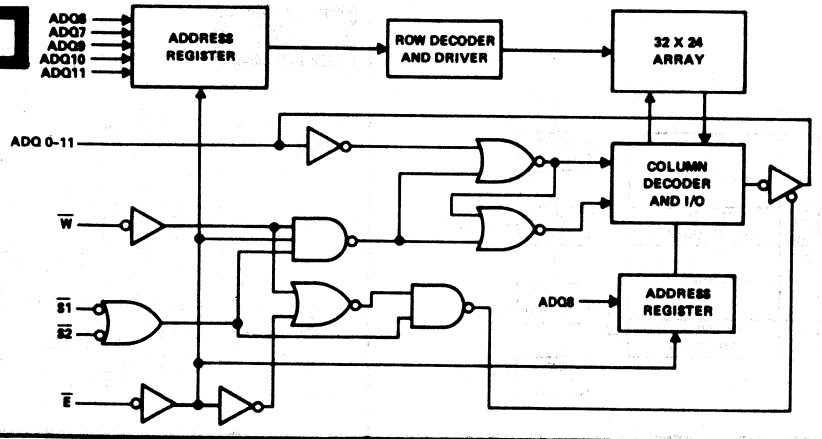

A456

A456 See PN 22at

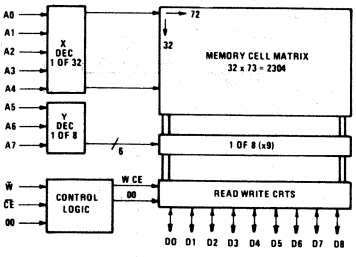

A457

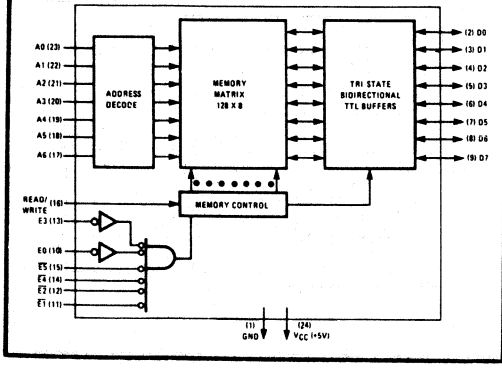

A461

A461 See PN 16ad

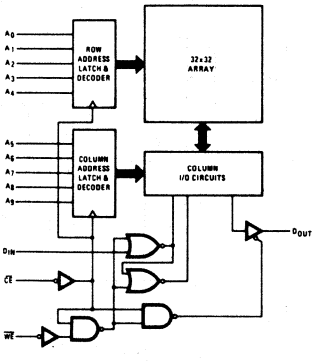

A462

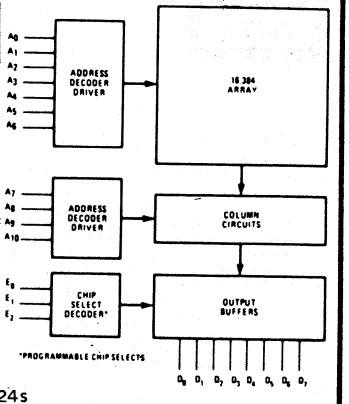

A462 See PN 24s
A462a See PN 24t

22. LOGIC/BLOCK DRAWINGS

IN DRAWING NUMBER SEQUENCE

A463

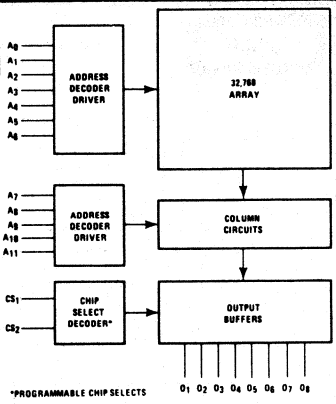

A463 See PN 24u

A467

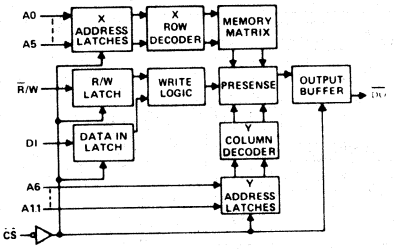

A470

A470 See PN 16gu

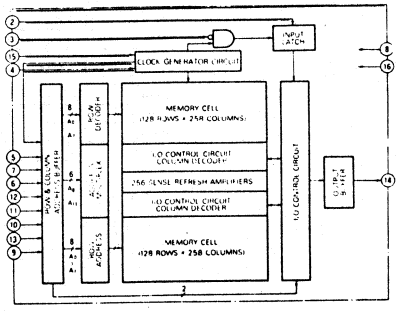

A468

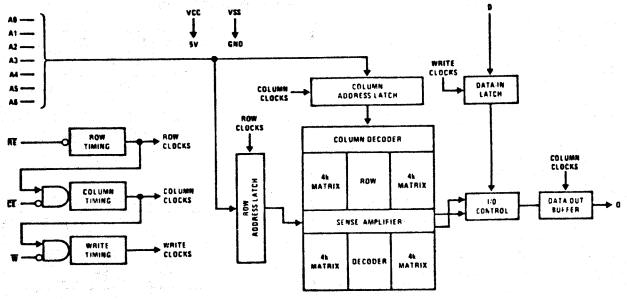

A471

A471 See PN 24e

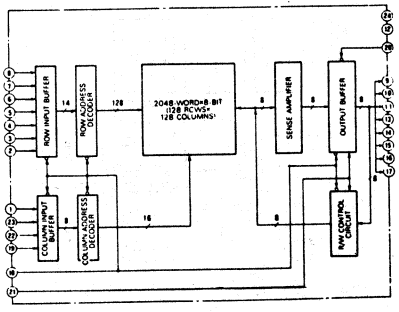

A469

A469 See PN 16he

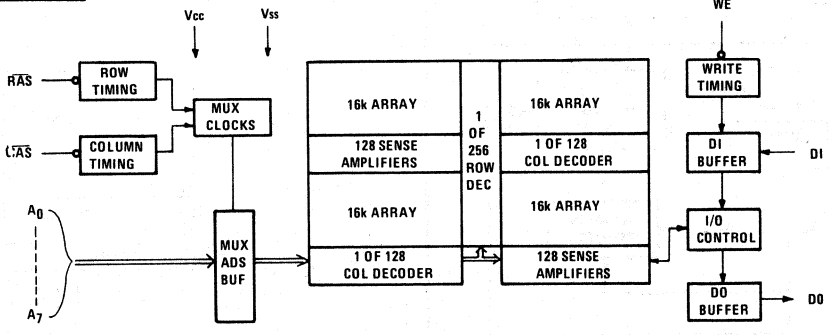

A472

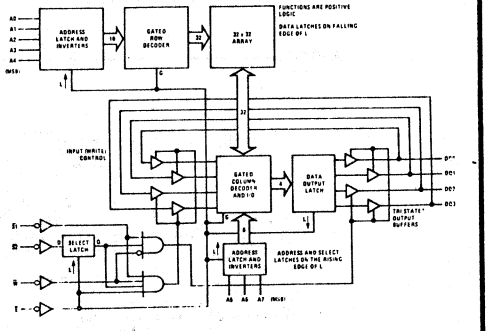

A473

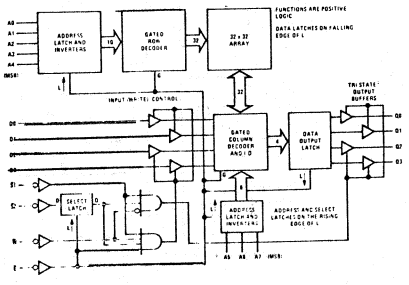

A474

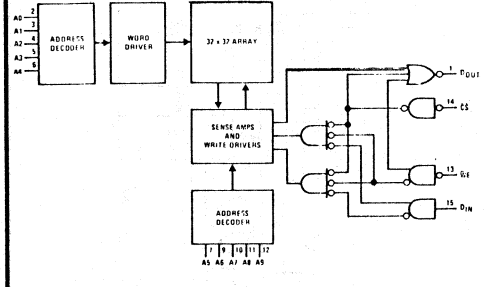

A475

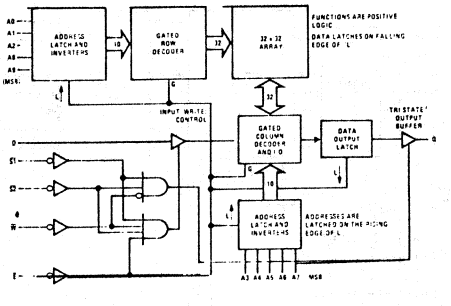

22. LOGIC/BLOCK DRAWINGS

IN DRAWING NUMBER SEQUENCE

A476

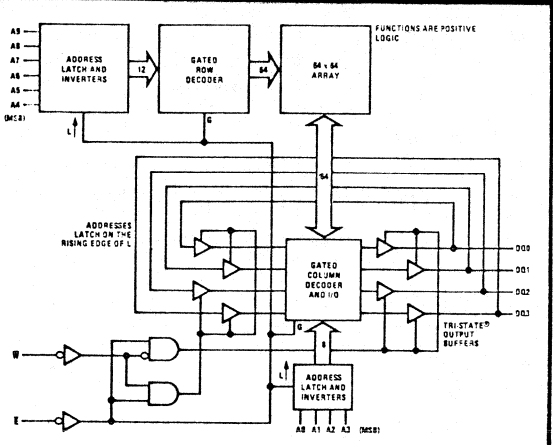

A477

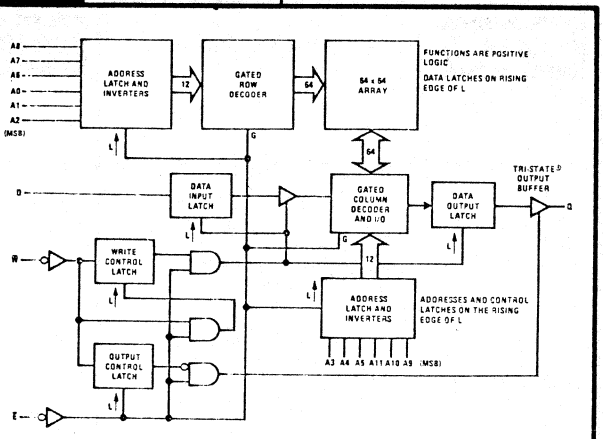

A478

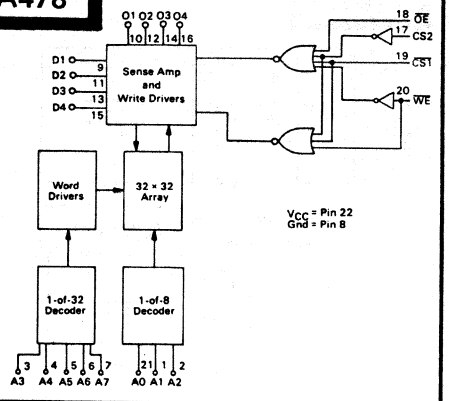

A479

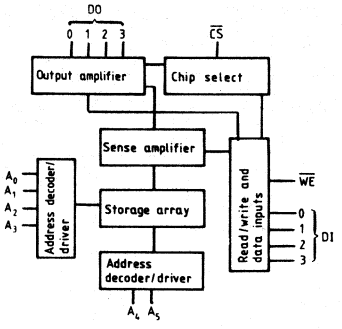

A480

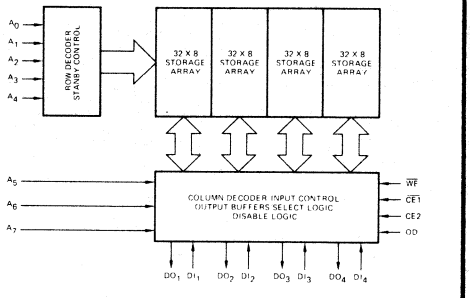

A481

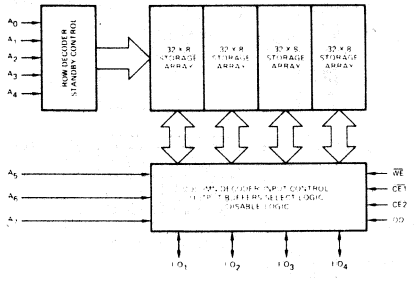

A482

A482 See PN 16i

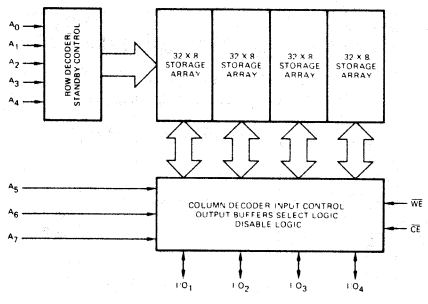

A483

A483 See PN 22m
A483a See PN 18m

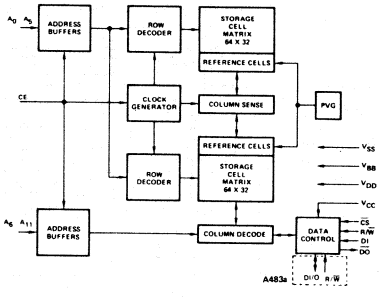

A485

A485 See PN 18o

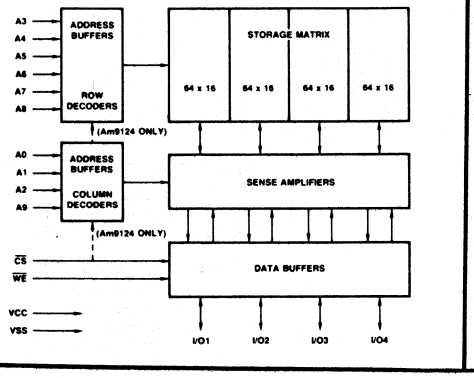

A486

A486 See PN 22ar

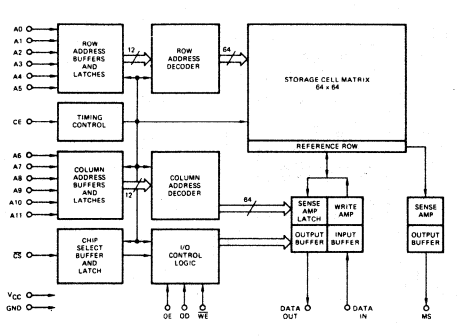

A487

A487 See PN 18bh

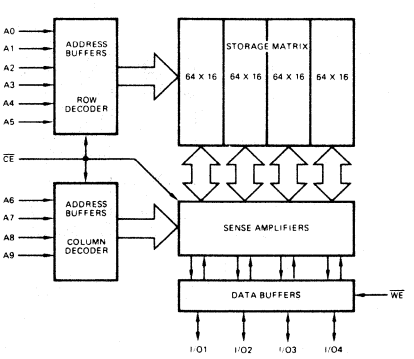

A488

A488 See PN 18bk

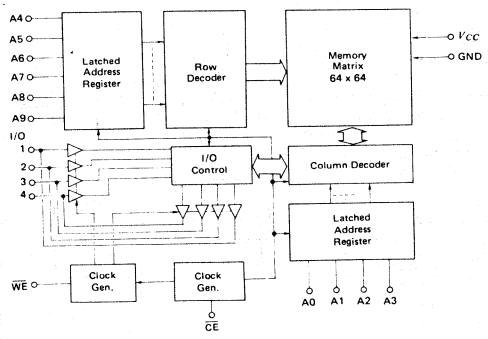

A489

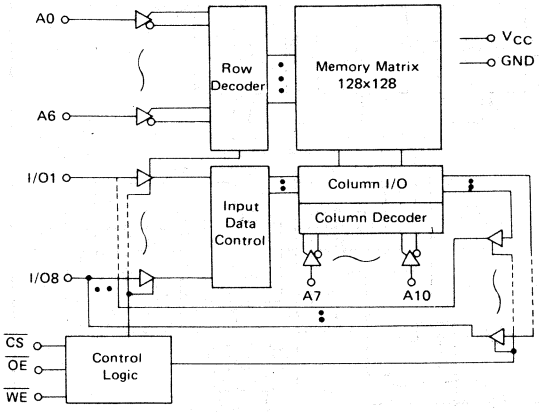

A489 See PN 24n

A490

A490 See PN 18bi

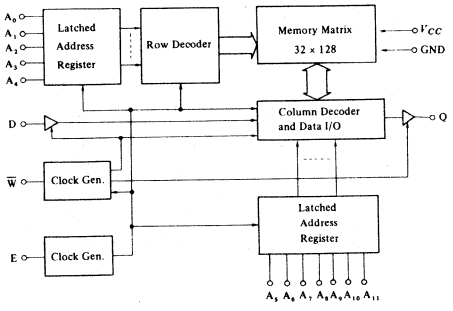

A491

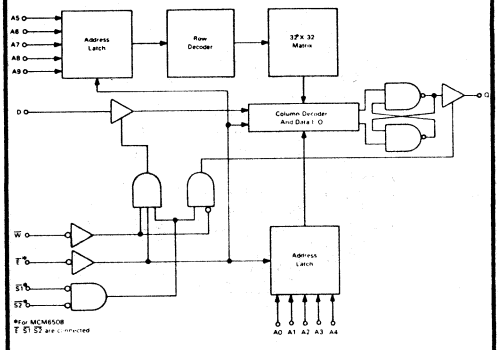

A493

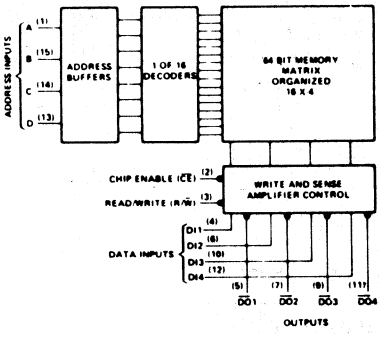

A494

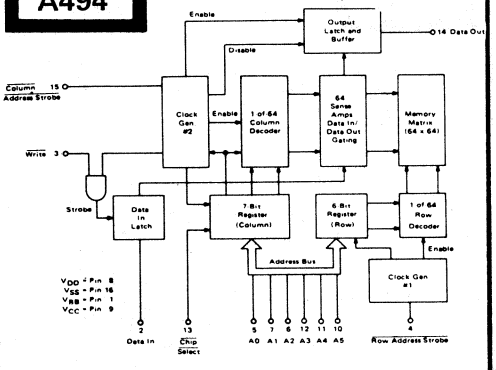

A496

A496 See PN 16gy

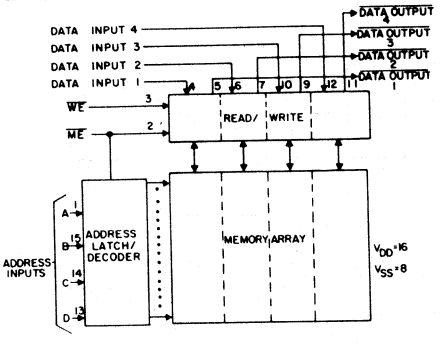

A497

A497 See PN 18y

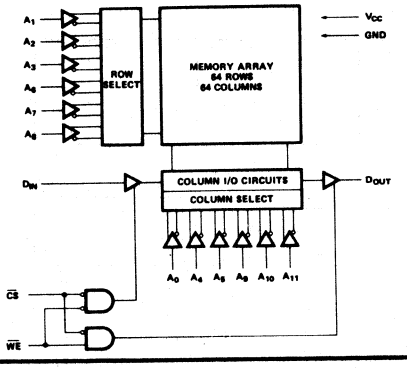

A498

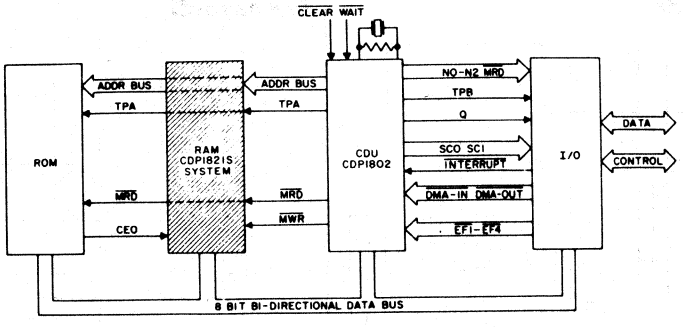

A499

A499 See PN 16k

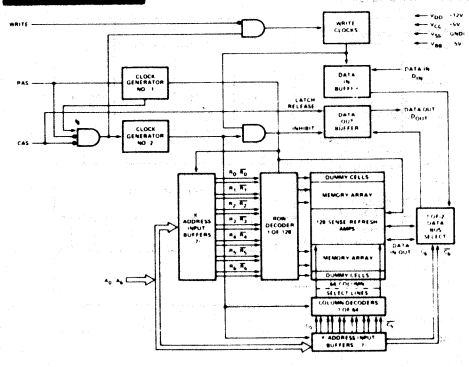

22. LOGIC/BLOCK DRAWINGS

IN DRAWING NUMBER SEQUENCE

A500

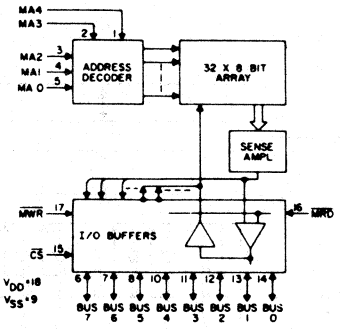

A502

A502 See PN 28ae

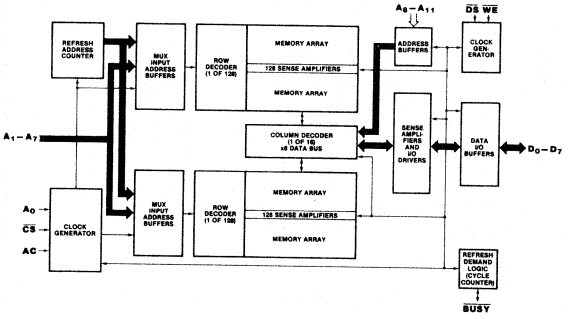

A501

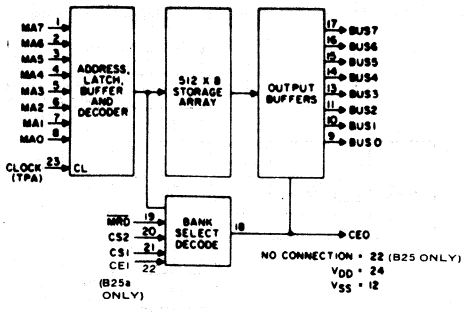

A505

A505 See PN 18am

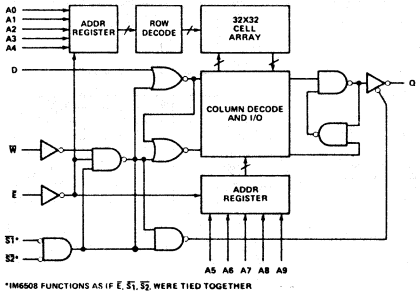

*IM6508 FUNCTIONS AS IF $\overline{E}$, $\overline{S1}$, $\overline{S2}$, WERE TIED TOGETHER

A506

A506 See PN 18af

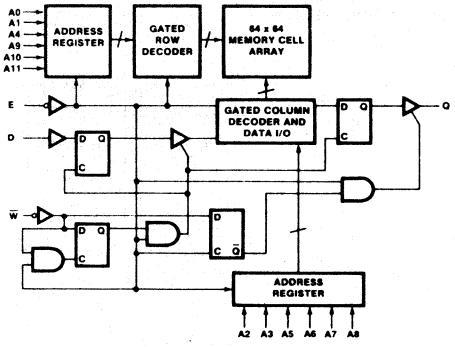

A507

A507 See PN 18bp

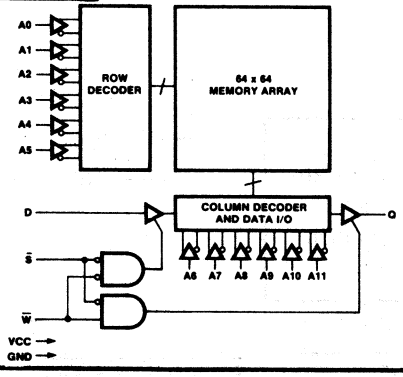

A509

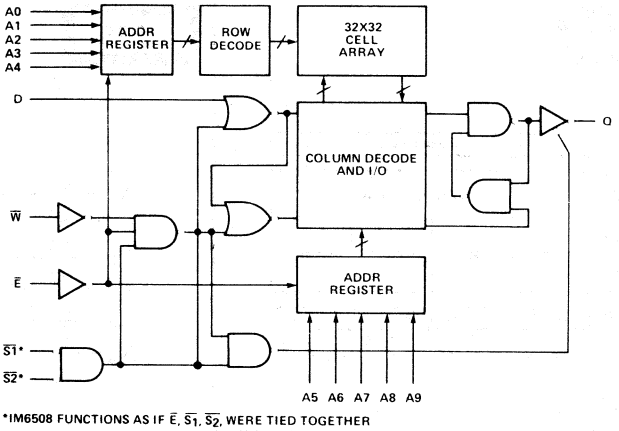

For A509 See PN 18am
For Note See PN 16ak

*IM6508 FUNCTIONS AS IF $\overline{E}$, $\overline{S1}$, $\overline{S2}$, WERE TIED TOGETHER

A510

For $\overline{CE}$ See PN40i
For CE See PN 40j

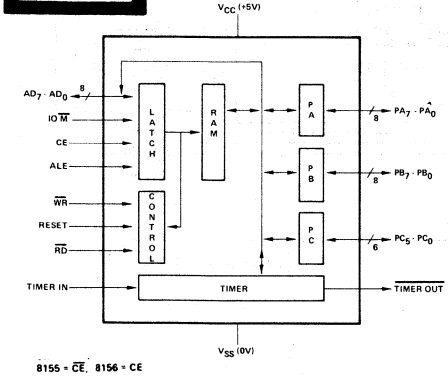

8155 = $\overline{CE}$, 8156 = CE

A511

A511 See PN 18bq

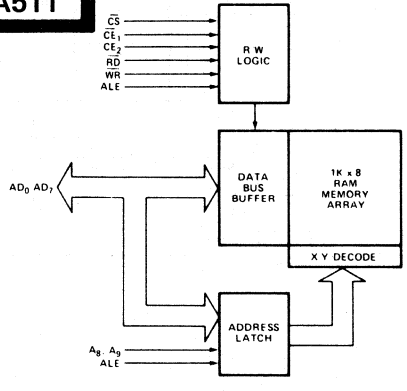

22. LOGIC/BLOCK DRAWINGS

IN DRAWING NUMBER SEQUENCE

A512

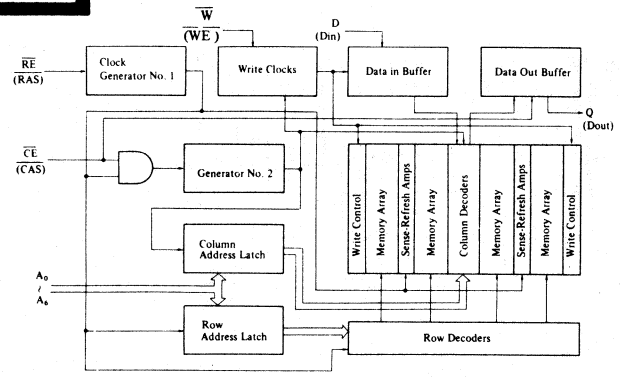

A513

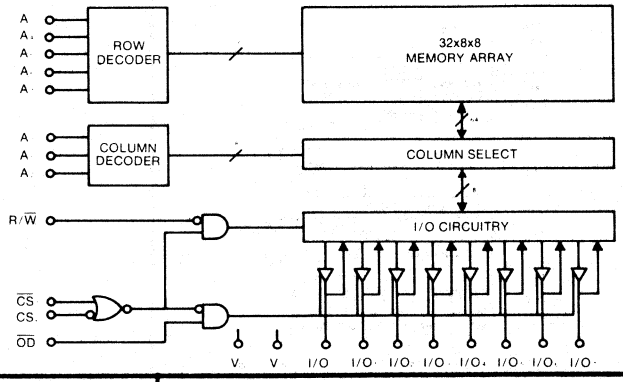

A514

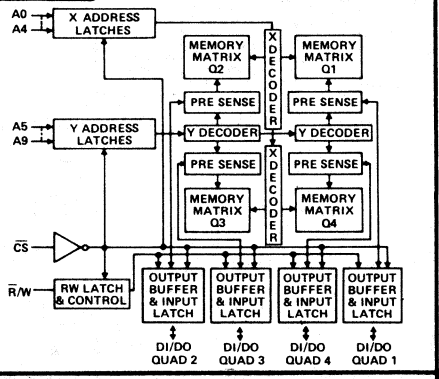

A515

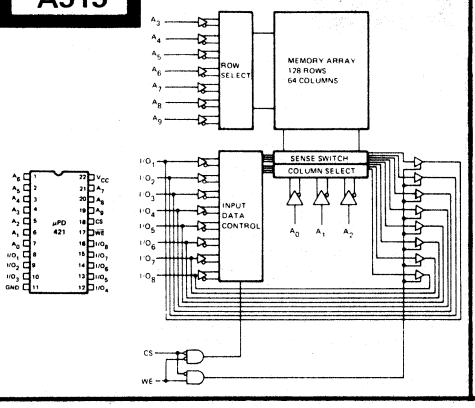

A516

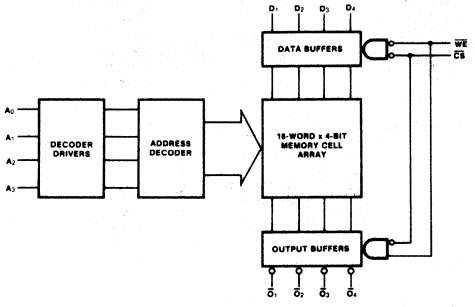

A517

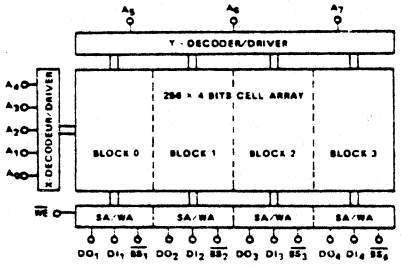

A517 See PN24ig
A517a See PN24ih

A518

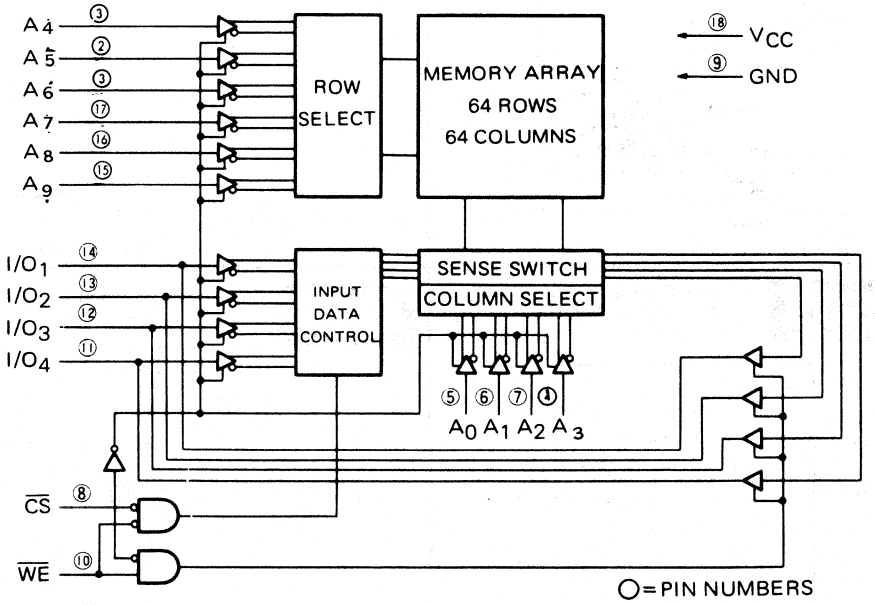

A519

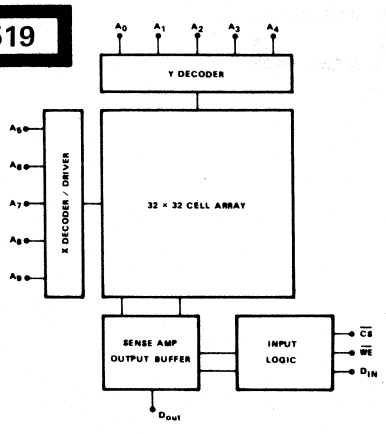

22. LOGIC/BLOCK DRAWINGS

IN DRAWING NUMBER SEQUENCE

A520

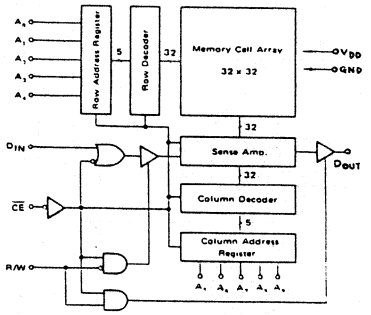

A520a

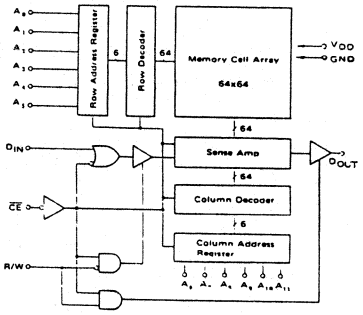

A521

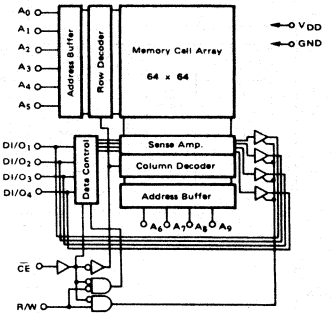

A522

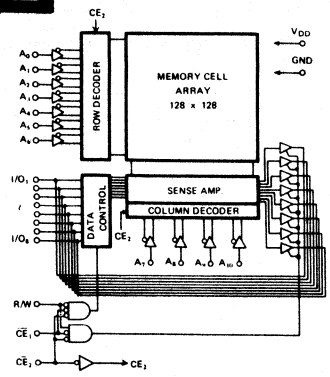

A523

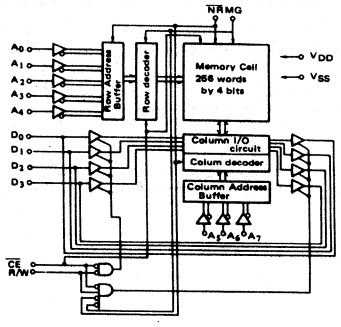

A525

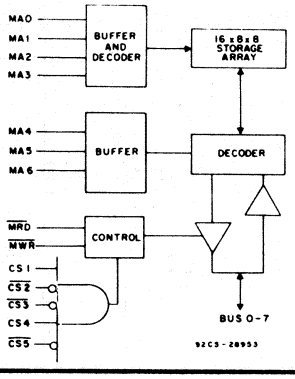

A524

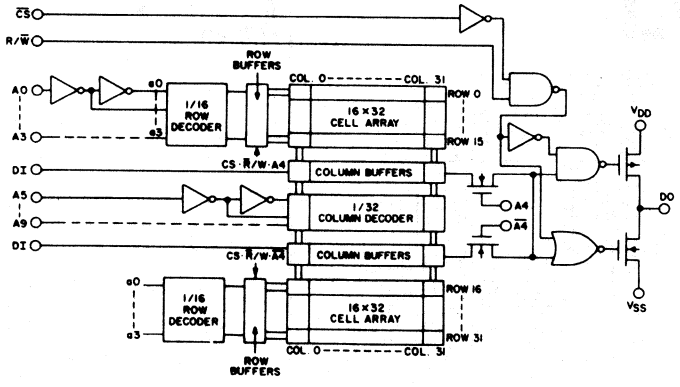

A526

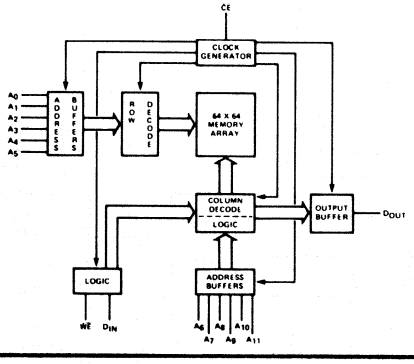

A527

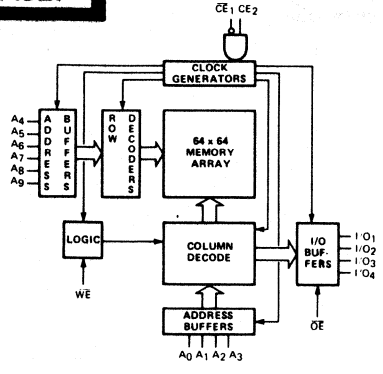

A528

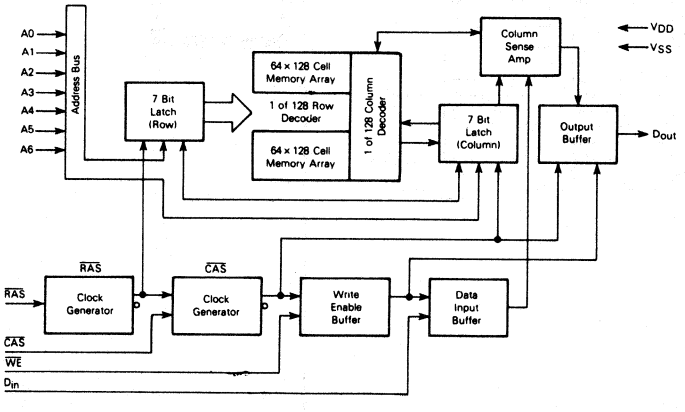

A529

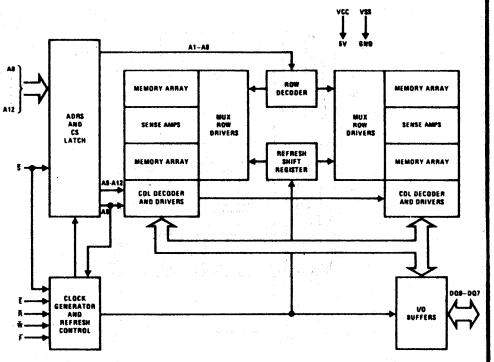

A530

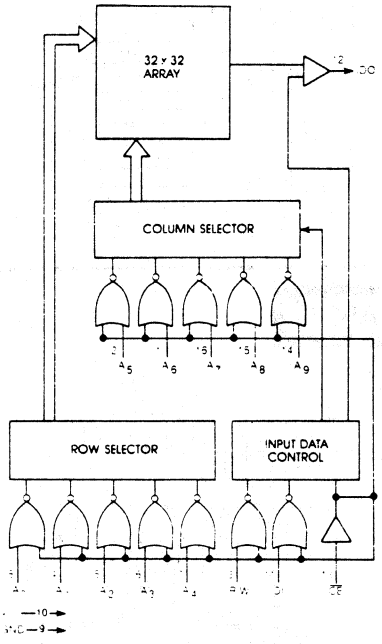

A531

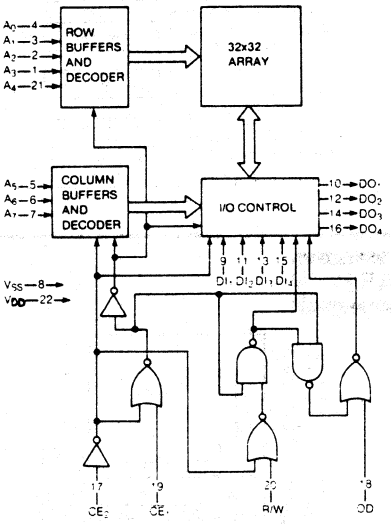

A532

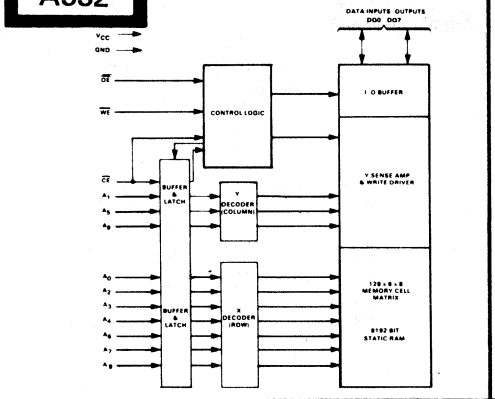

A533

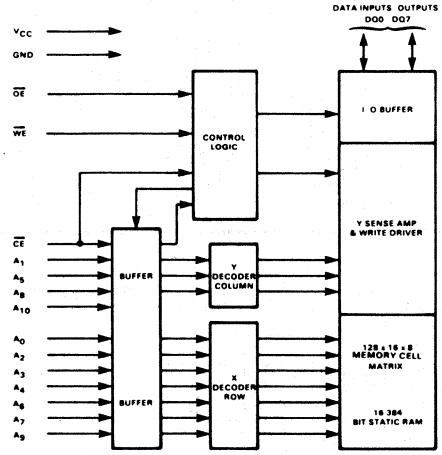

A534

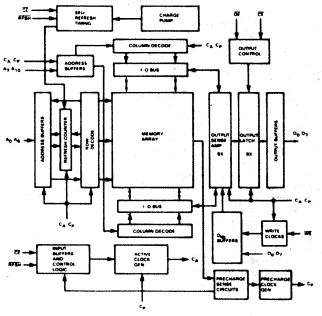

A535

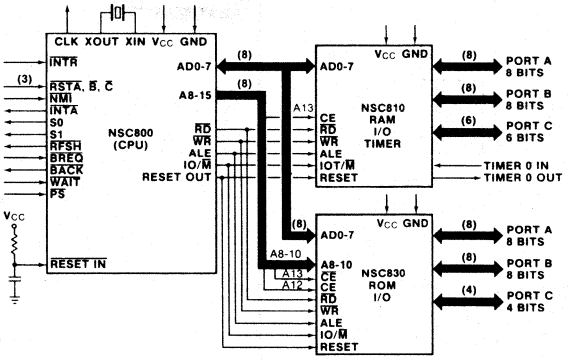

A536

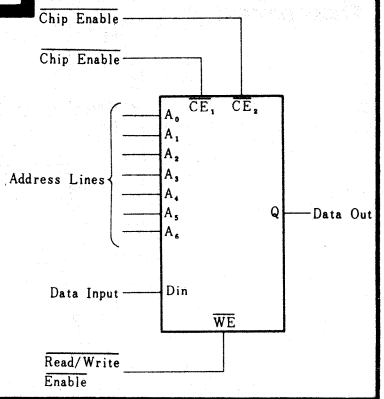

A537

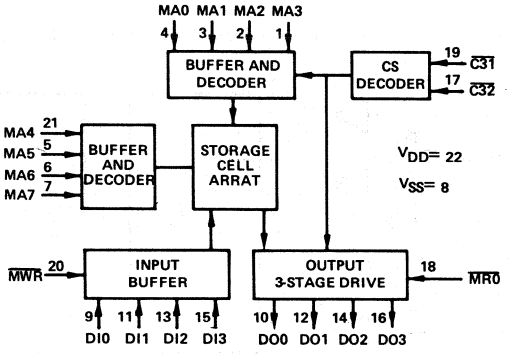

A538

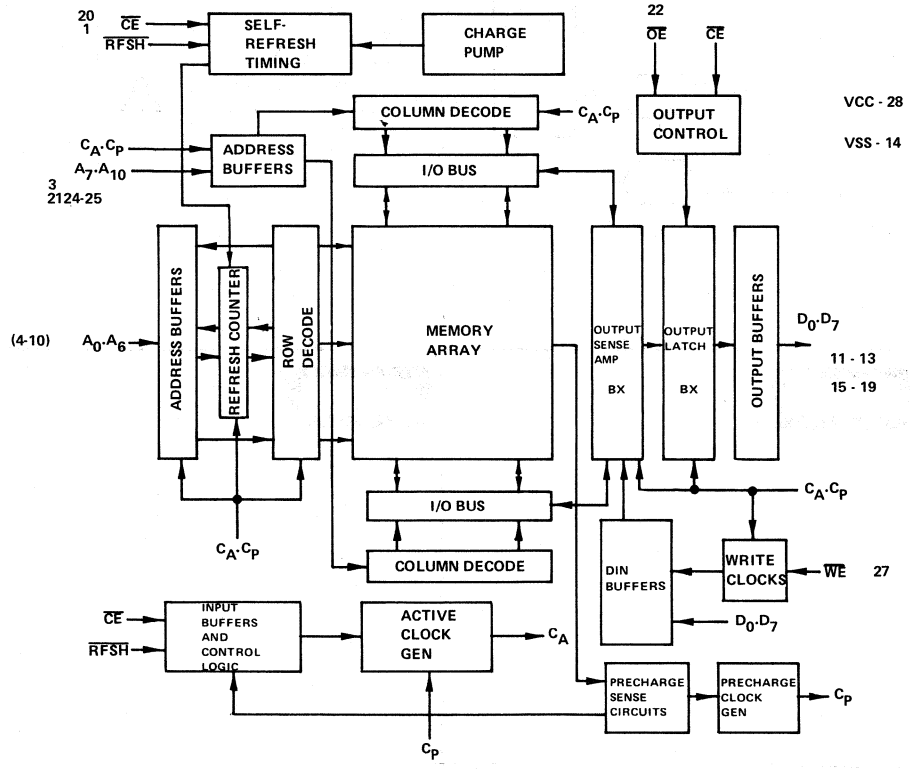

A539

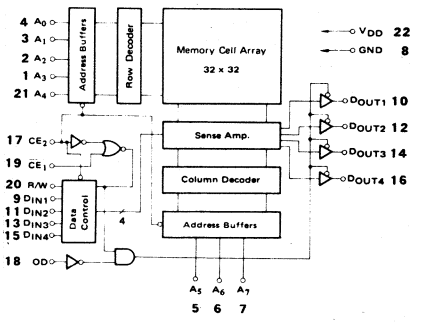

22. LOGIC/BLOCK DRAWINGS

IN DRAWING NUMBER SEQUENCE

A540

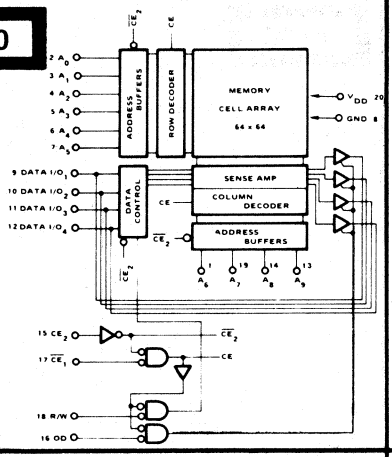

A541

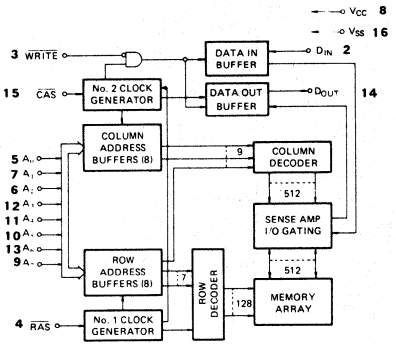

A542

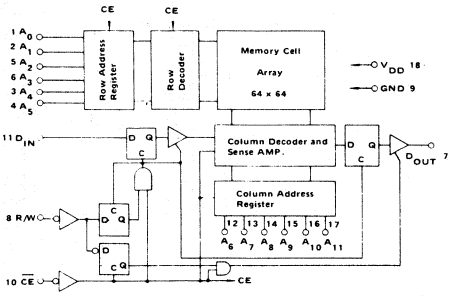

A543

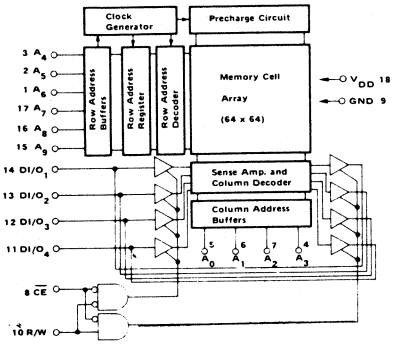

A545

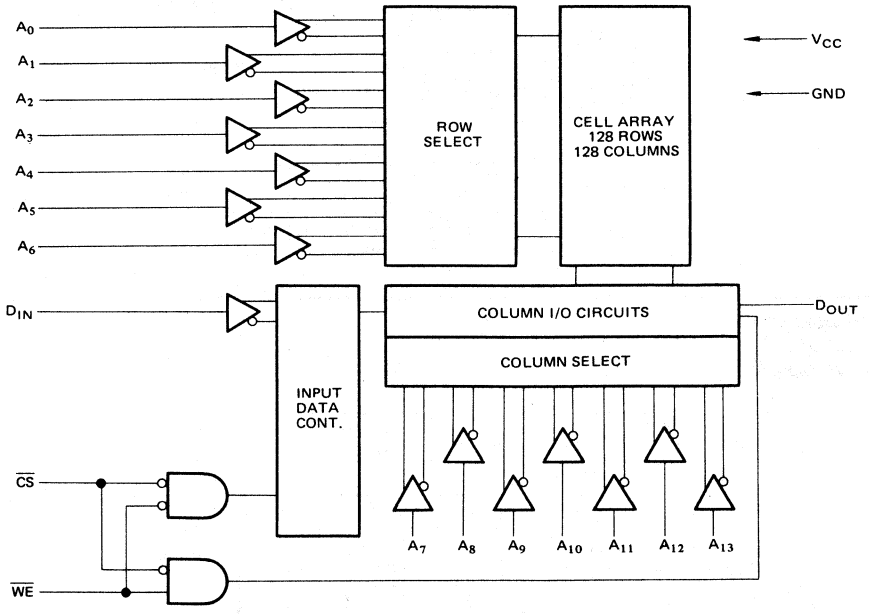

B1

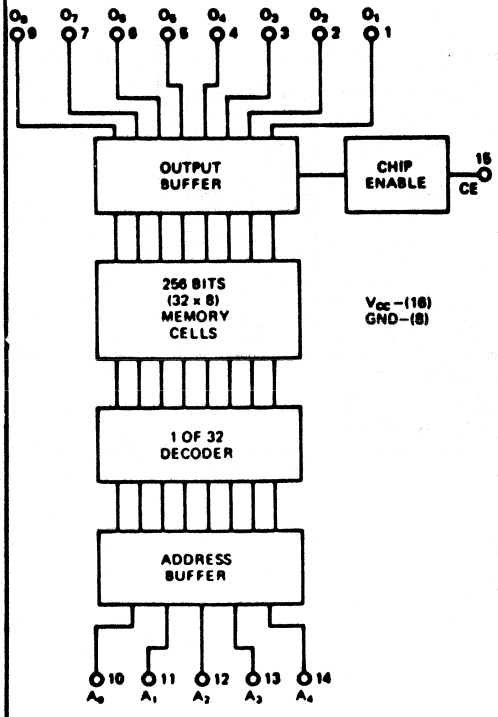

B18

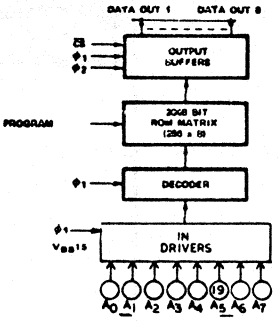

	DATA OUT								CS	Ø1	Ø2	PROG	A								VDD	VCC	VGG	VBB
	1	2	3	4	5	6	7	8					0	1	2	3	4	5	6	7				
B18	4	5	6	7	8	9	10	11	14	23	22	13	3	2	1	21	20	19	18	17	24	12	16	15
B18a	4	5	6	7	8	9	10	11	14	23	22	NC	3	2	1	21	20	19	18	17	24	12	16	NC
B18b	4	5	6	7	8	9	10	11	14	NC	NC	13	3	2	1	21	20	19	18	17	24	12	16	15

B19

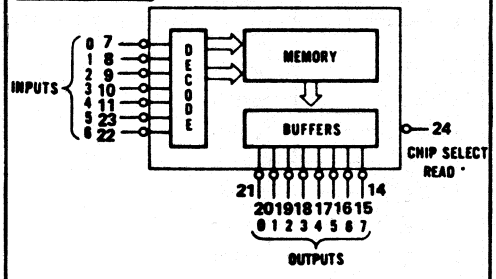

*WHEN CHIP SELECT READ IS AT GROUND THE OUTPUTS ARE FLOATING.

B27

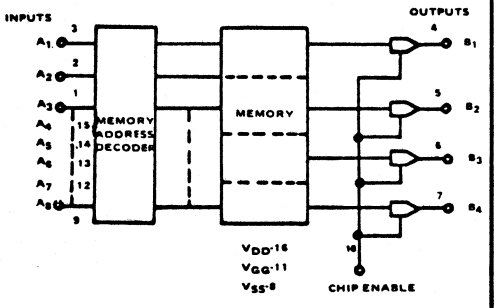

B29

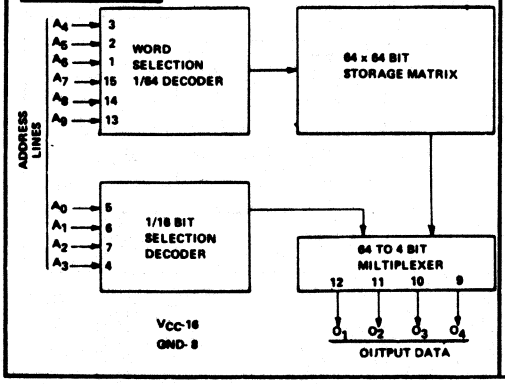

B26

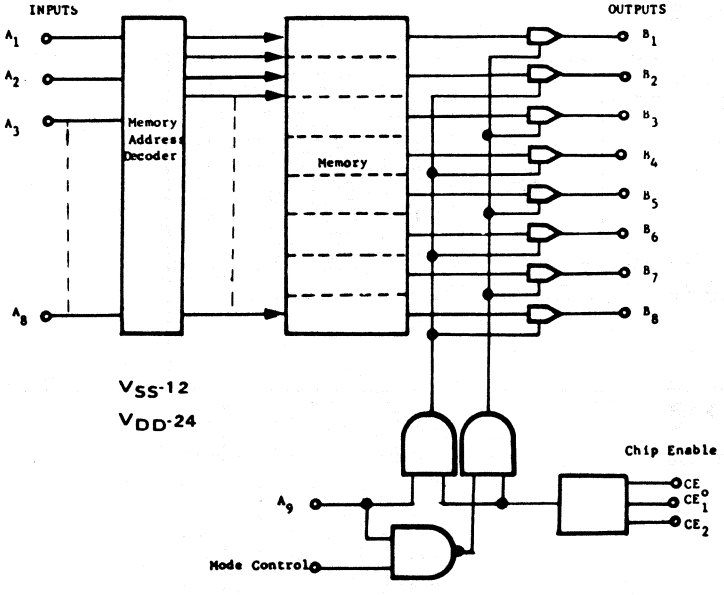

	A																CHIP ENABLE			MODE CONTROL	VGG
	1	2	3	4	5	6	7	8	9	1	2	3	4	5	6	7	8	0	1	2		
B26	3	2	1	21	20	19	18	17	13	4	5	6	7	8	9	10	11	14	NC	NC	15	16
B26a	3	2	1	21	20	19	18	14	NC	4	5	6	7	8	9	10	11	15	NC	NC	16	17
B26b	3	2	1	21	20	19	18	17	13	4	5	6	7	8	9	10	11	14	22	23	15	16
B26c	3	2	1	21	20	19	18	14	NC	4	5	6	7	8	9	10	11	15	22	23	16	17

22. LOGIC/BLOCK DRAWINGS

IN DRAWING NUMBER SEQUENCE

B32

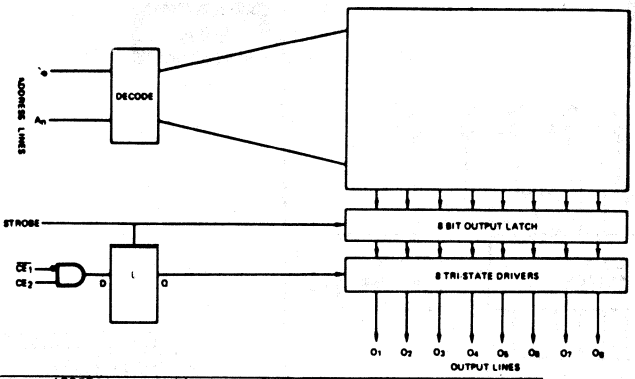

	ADDRESS								OUT								CE	CE			
	0	1	2	3	4	5	6	7	8	1	2	3	4	5	6	7	8	1	2	STROBE	VCC	GND
B32	21	22	23	1	2	3	4	5	6	7	8	9	10	14	15	16	17	20	19	18	24	12
B32a	21	22	23	1	2	4	5	6		7	8	9	10	14	15	16	17	20	19	18	24	12

B35

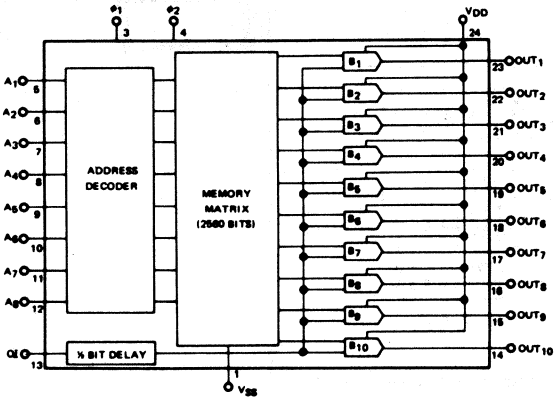

B36

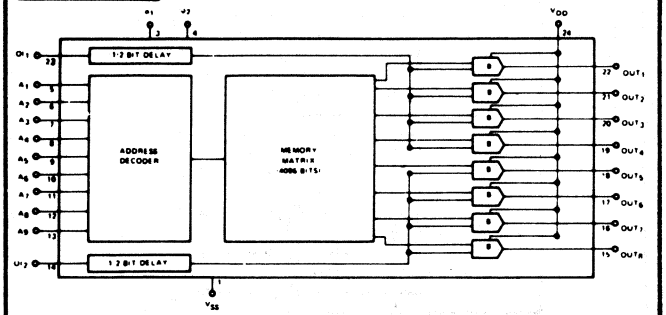

B45

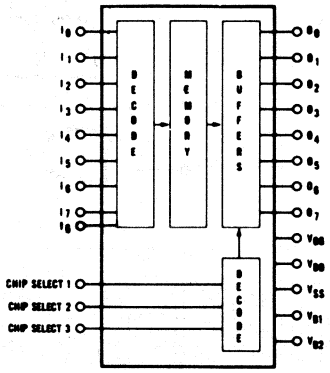

	I								O								CHIP SELECT			VGG	VDD	VSS	VB1	VB2
	0	1	2	3	4	5	6	7	8	0	1	2	3	4	5	6	7	1	2	3					
B45	15	16	17	18	19	24	23	22		11	10	9	8	7	6	5	4	1	2	3	20	21	12	13	14
B45a	3	2	1	21	20	19	18	17	14	5	7	9	10					4	23	22	16	24	12	13	15

B46

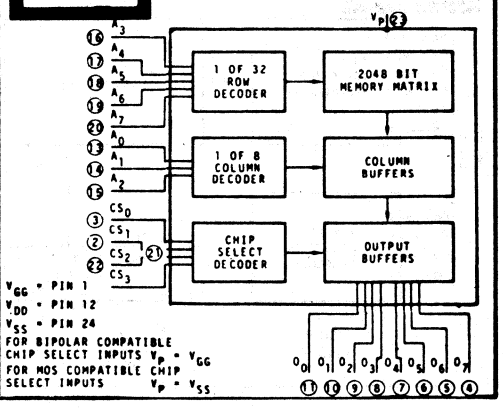

22. LOGIC/BLOCK DRAWINGS

IN DRAWING NUMBER SEQUENCE

B47

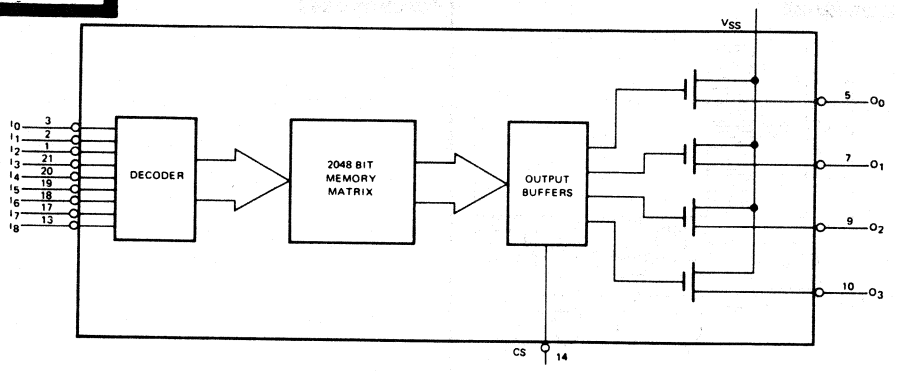

B50

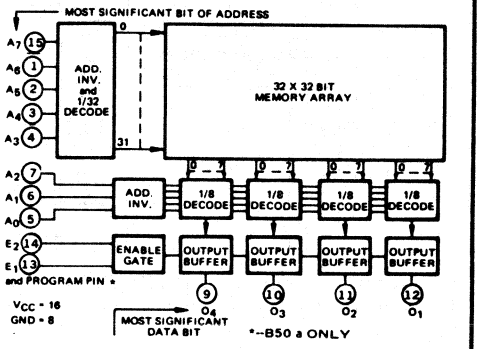

B49

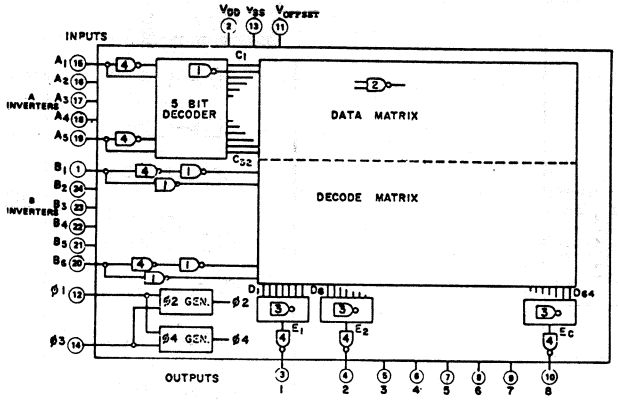

B53

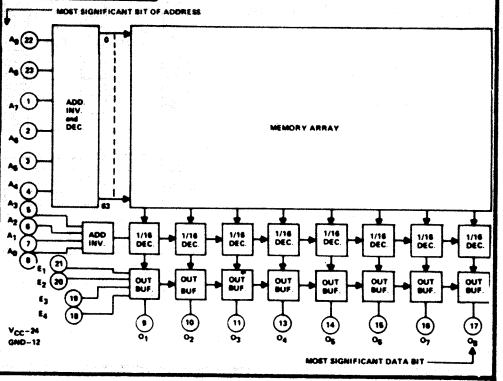

B61

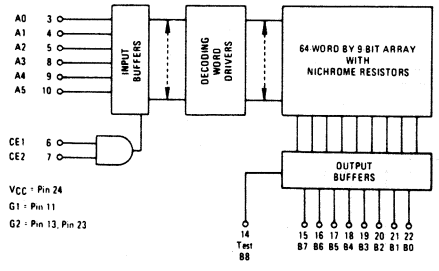

B65

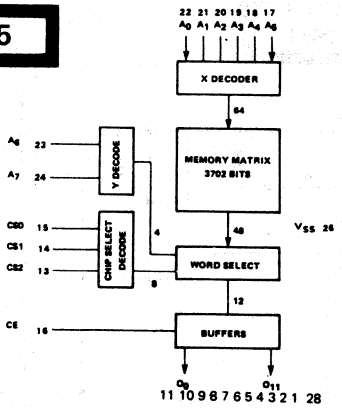

B67

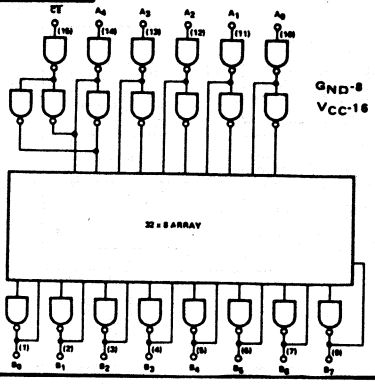

B71

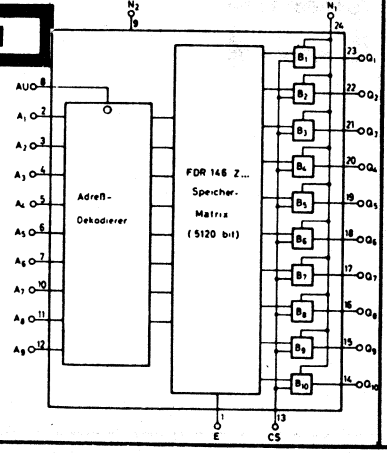

22. LOGIC/BLOCK DRAWINGS

IN DRAWING NUMBER SEQUENCE

B78

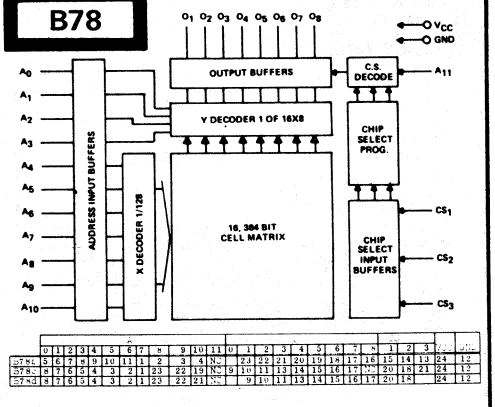

B80

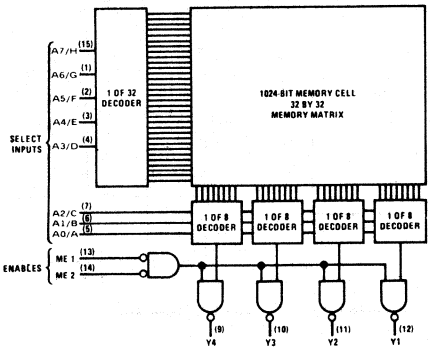

B82

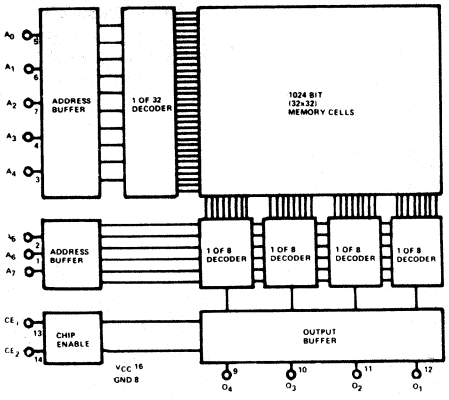

B87

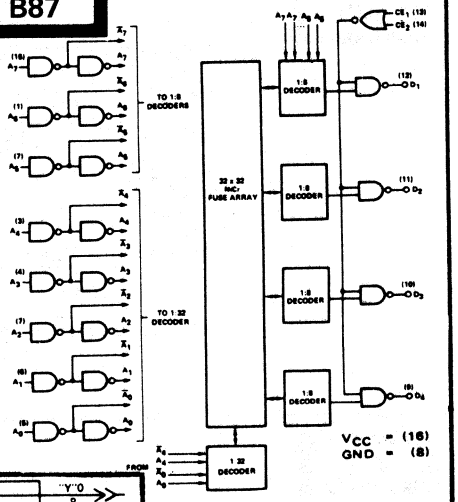

B90

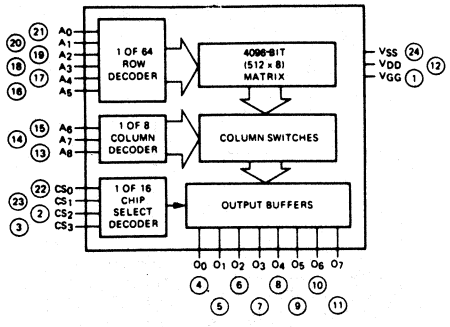

B91

B91 see PN 42a

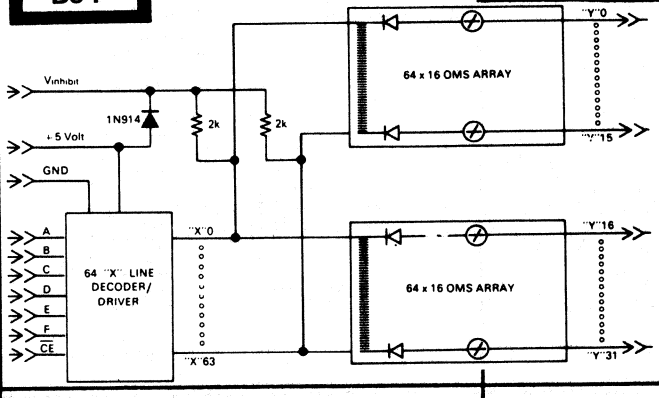

B94

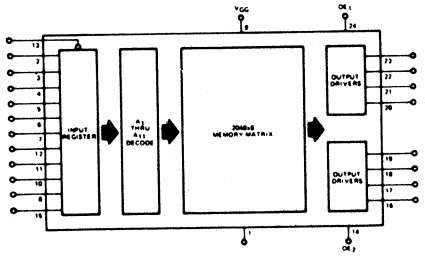

	1	2	3	4	5	6	7	8	10	11
B94	VSS	A1	A2	A3	A4	A5	A6	A10	A9	A8

12	13	15	16	17	18	19	20	21	22	23
A7	AR	A11	O8	O7	O6	O5	O4	O3	O2	O1

B96

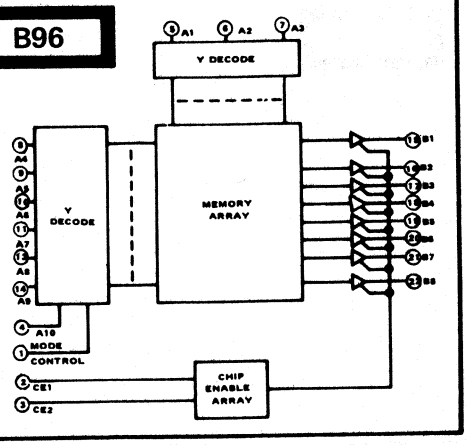

22. LOGIC/BLOCK DRAWINGS

IN DRAWING NUMBER SEQUENCE

B105

CIRCUIT VARIATION	
B105	I and II

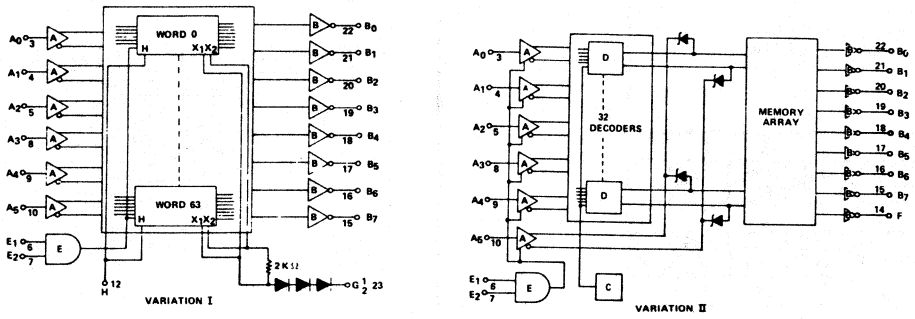

B111

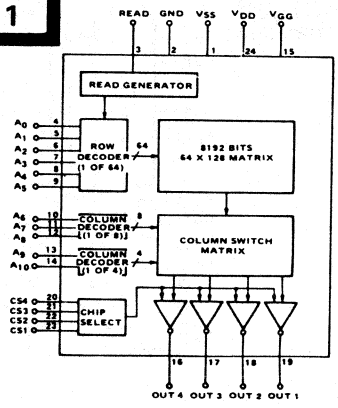

B112

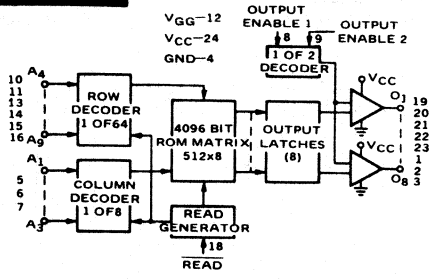

B119

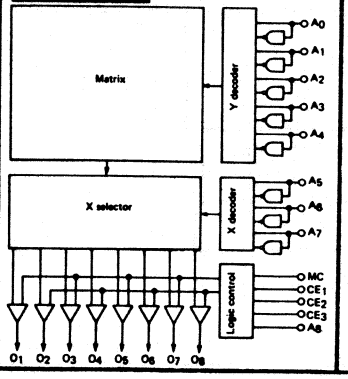

B120

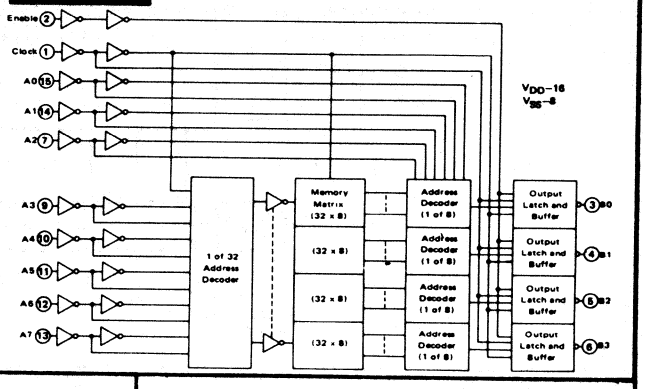

B121

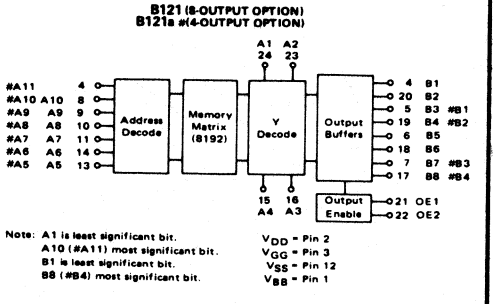

B123

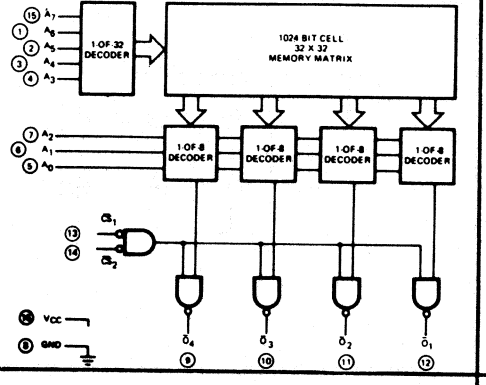

B129

See PN 16b

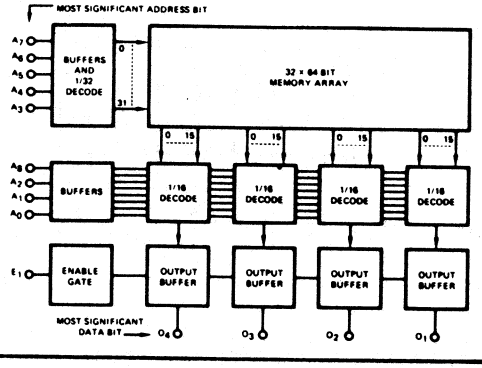

B130

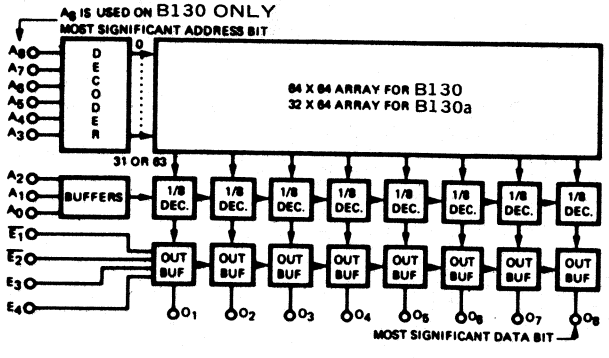

See PN 24ap

22. LOGIC/BLOCK DRAWINGS

IN DRAWING NUMBER SEQUENCE

B131

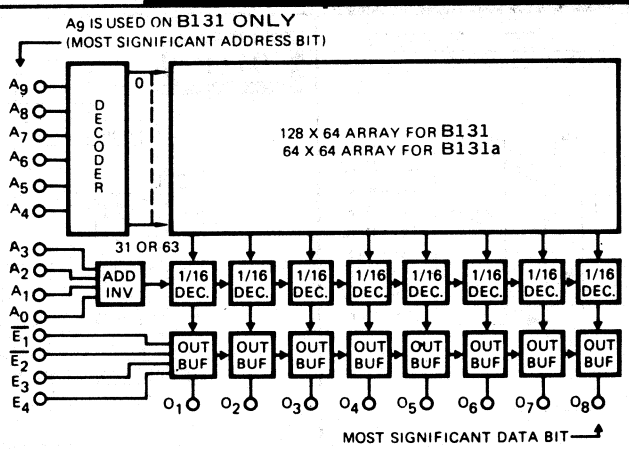

See PN 24ag

B137

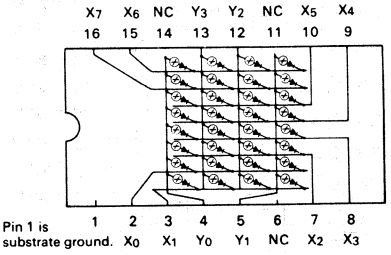

B132

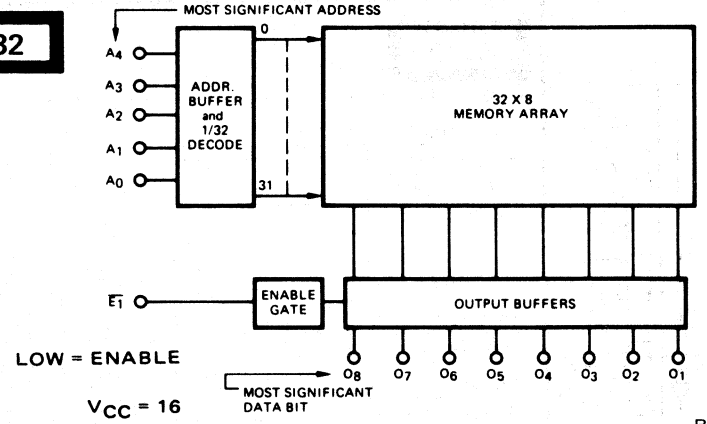

B132 see PN 16bw

B138

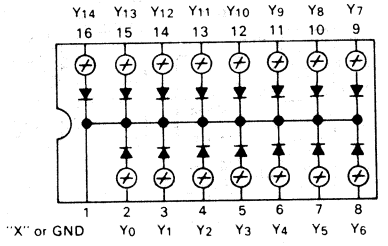

B139

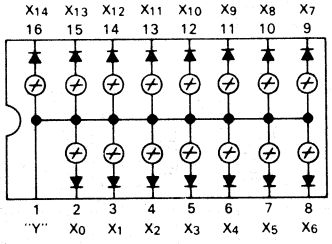

B140

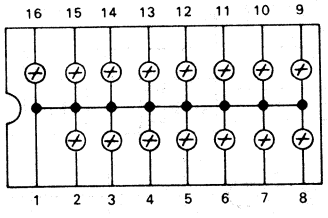

B141

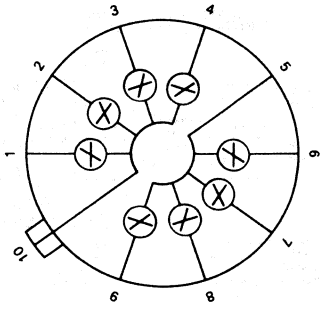

B143

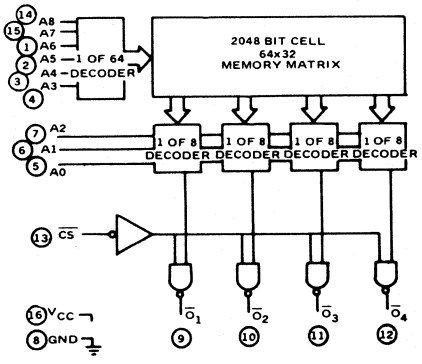

B144

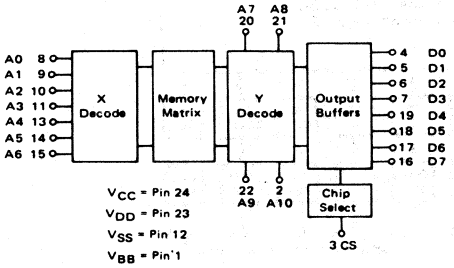

B145

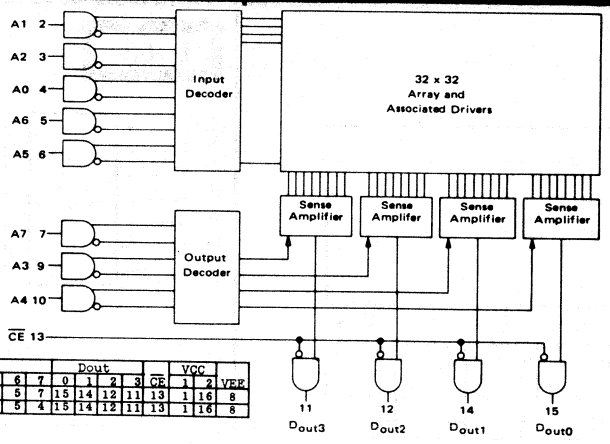

	A							Dout				CE	VCC		VEE
	0	1	2	3	4	5	6	7	0	1	2	3		1	2	
B145	4	2	3	9	10	6	5	7	15	14	12	11	13	1	16	8
B145a	4	9	10	2	3	7	5	4	15	14	12	11	13	1	16	8

B156

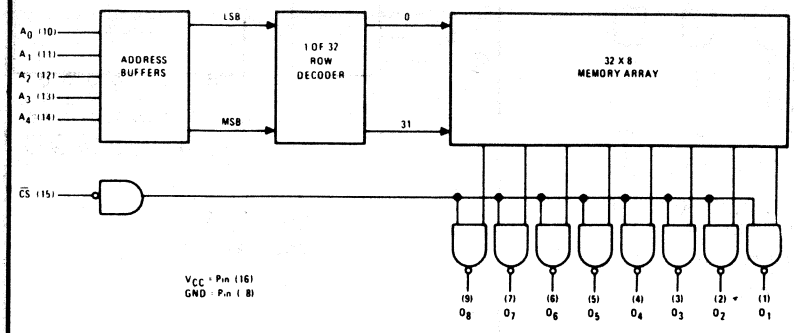

B157

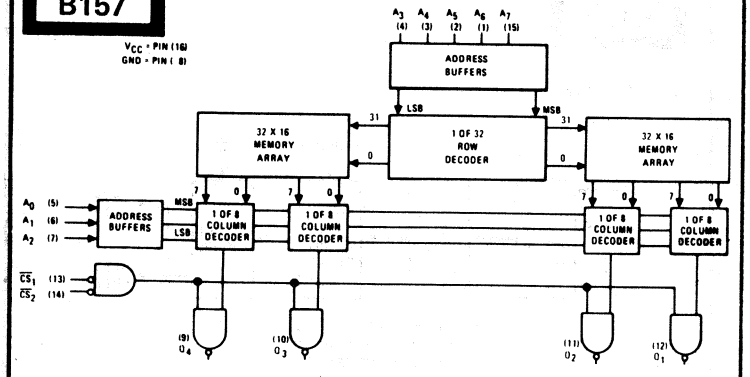

B158

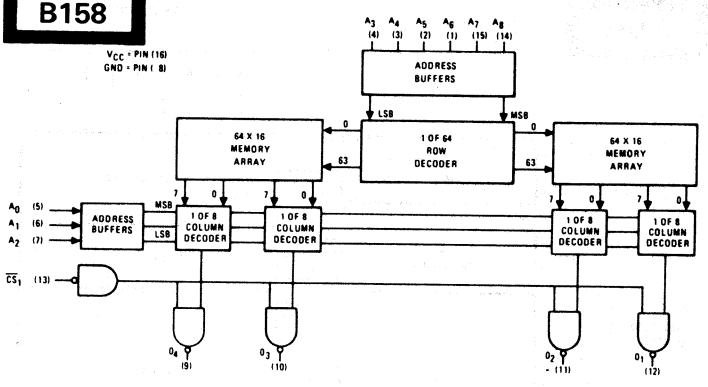

B159

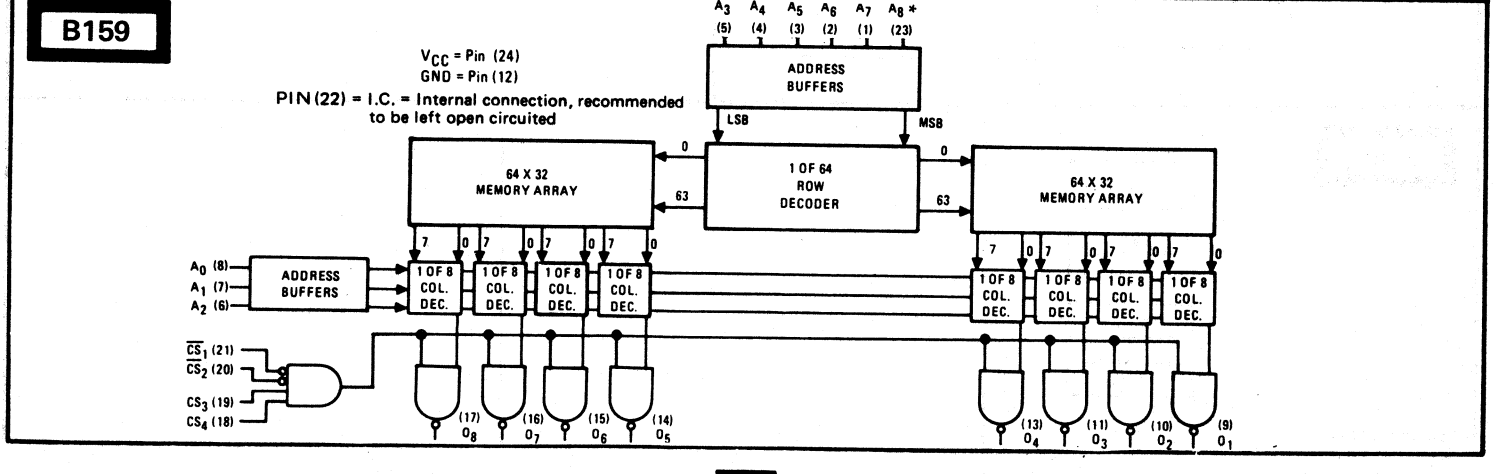

22. LOGIC/BLOCK DRAWINGS

IN DRAWING NUMBER SEQUENCE

B161

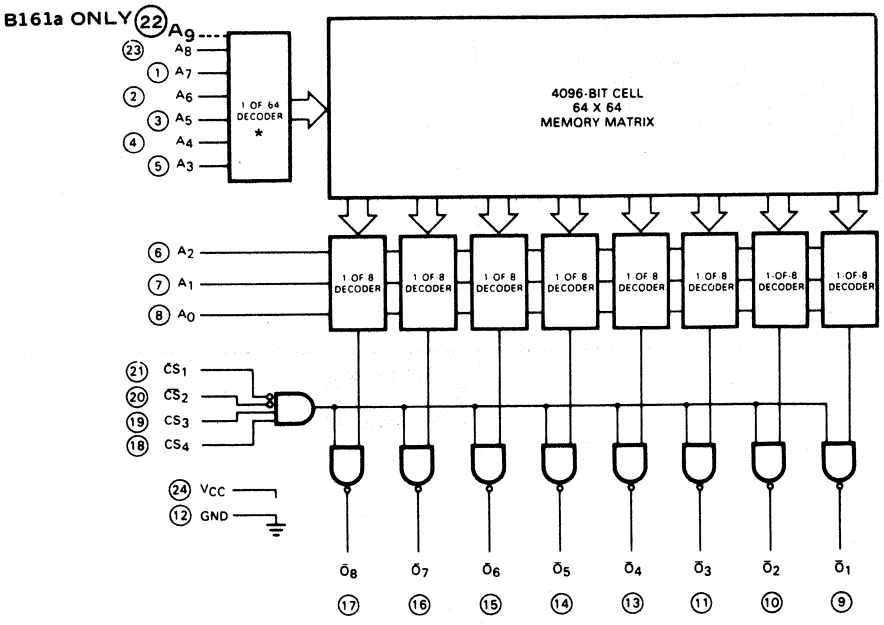

FOR B161a ONLY: 8192 BIT CELL MEMORY MATRIX 128x64

○ = Pin Numbers * B161a DECODER 1 OF 128 PIN 22=A9.

B162

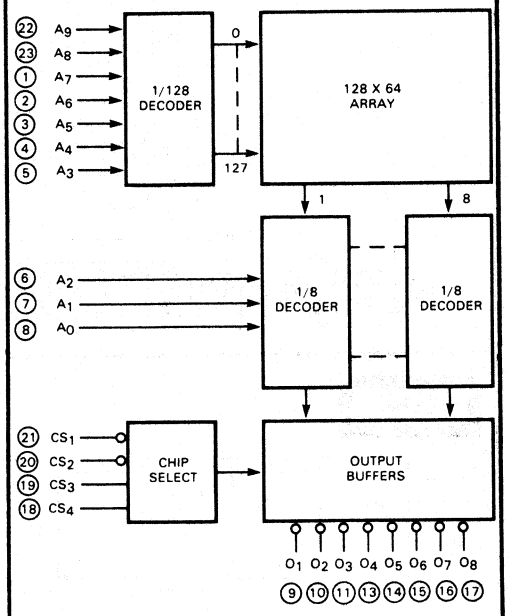

V_{CC} = Pin 24
GND = Pin 12

B163

B163b See PN 24as
B163c See PN 24at

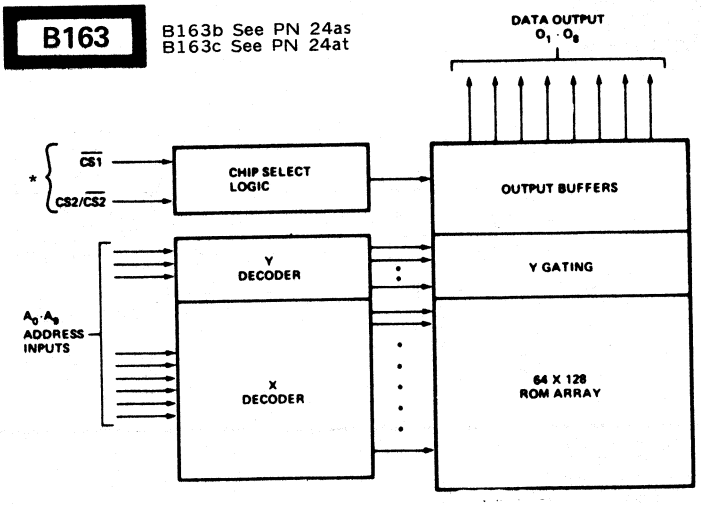

B170

See PN 24ay

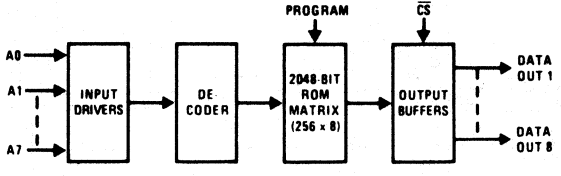

Note: In the read mode a logic "1" at the address inputs and data outputs is a high and logic "0" is a low.

B165

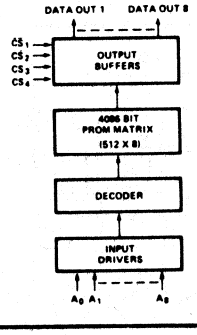

See PN 24aw

22. LOGIC/BLOCK DRAWINGS

IN DRAWING NUMBER SEQUENCE

B172

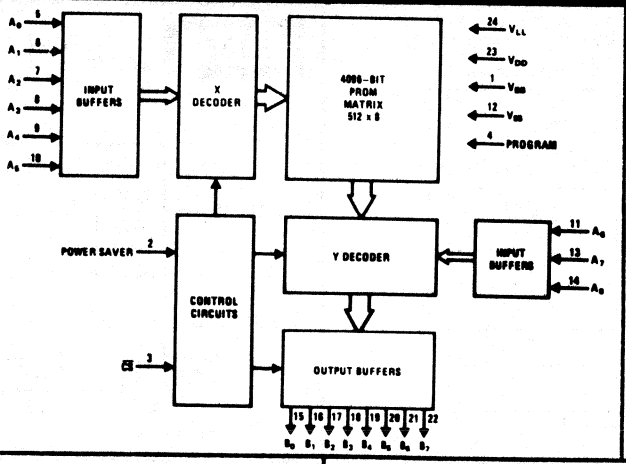

B178

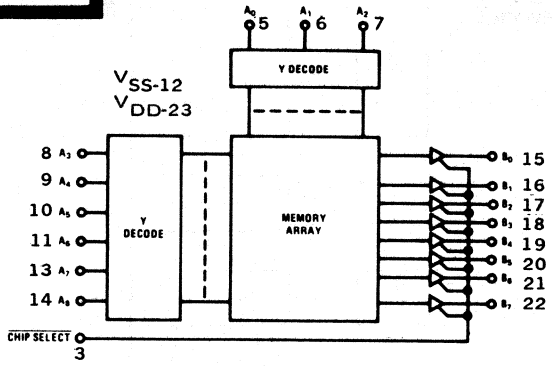

B175

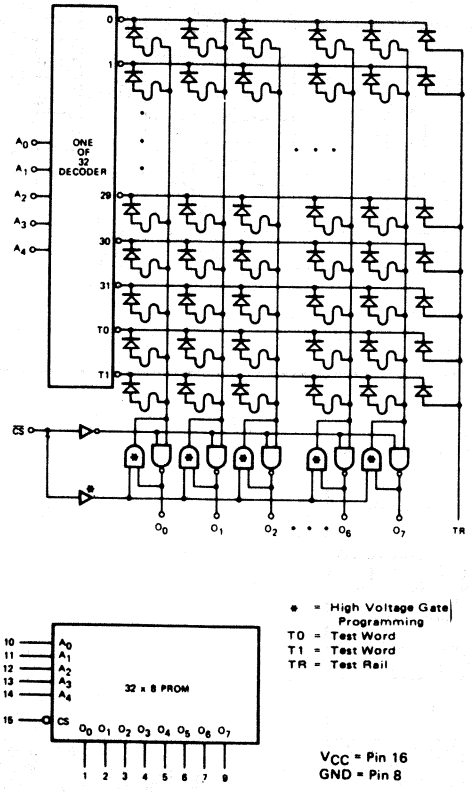

* = High Voltage Gate Programming
TO = Test Word
T1 = Test Word
TR = Test Rail

VCC = Pin 16
GND = Pin 8

B176

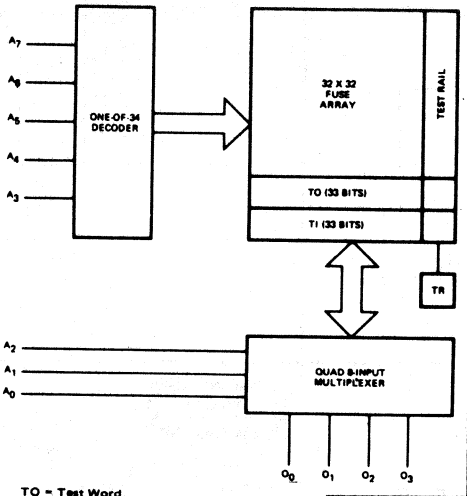

TO = Test Word
TI = Test Word
TR = Test Rail

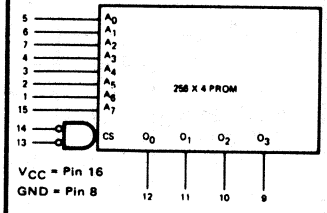

VCC = Pin 16
GND = Pin 8

B183

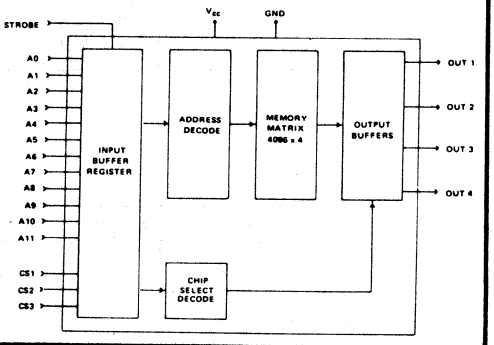

B187

VCC = Pin 12
Gnd = Pin 1

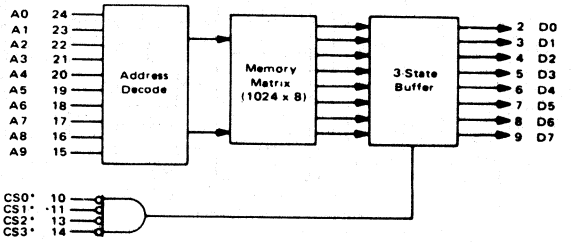

*Active level defined by the customer

B181

	A	B
B181	512x5	01-05
B181a	512x8	01-08
B181b	512x10	01-010

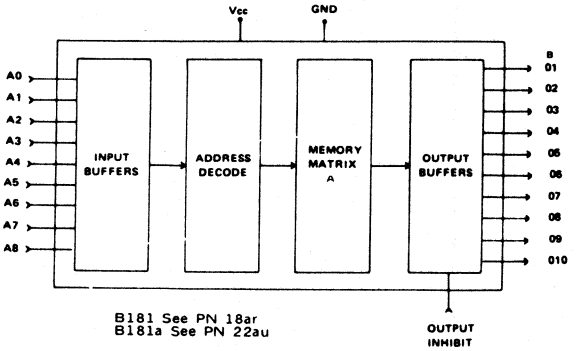

B181 See PN 18ar
B181a See PN 22au

B182

B182 See PN 24au
B182a See PN 24p
B182b See PN 24ba
B182c See PN 24im

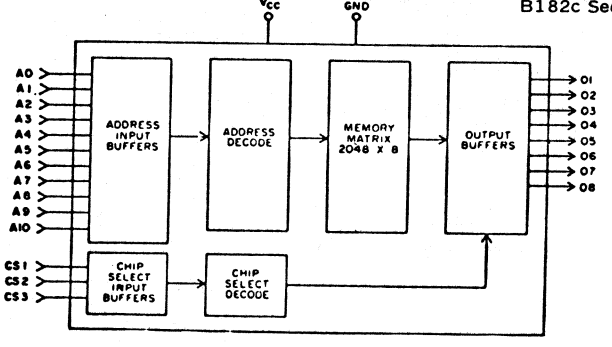

22. LOGIC/BLOCK DRAWINGS

IN DRAWING NUMBER SEQUENCE

B188

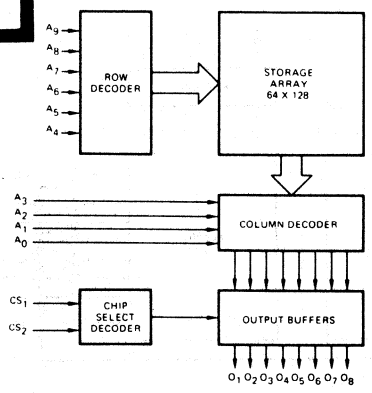

B190

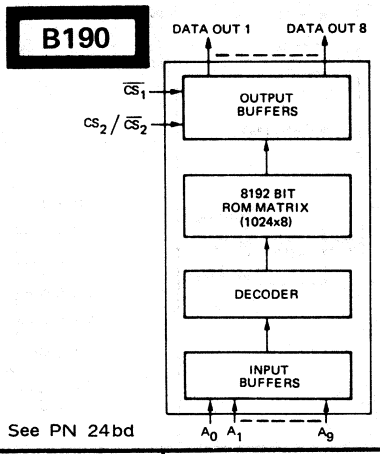

See PN 24bd

B195

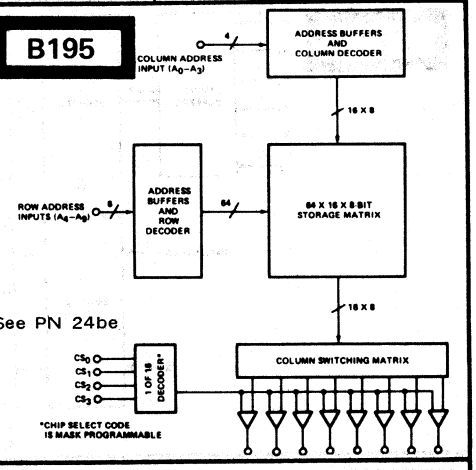

See PN 24be

B196

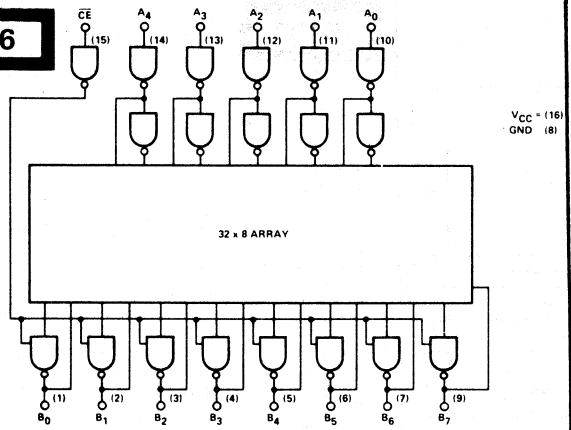

B198

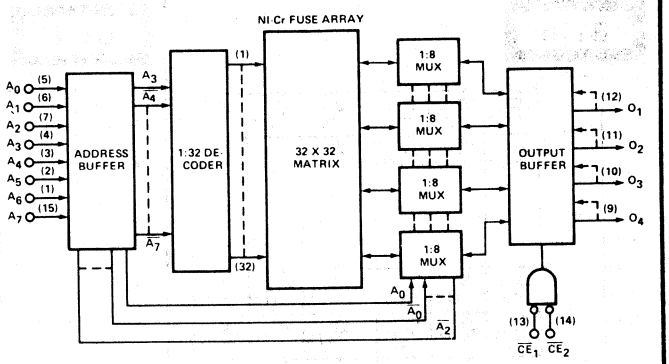

VCC = (16)
GND = (8)
( ) = DENOTES PIN NUMBERS

B197

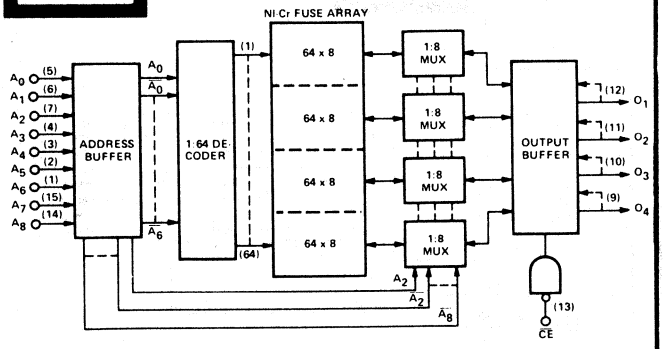

B199

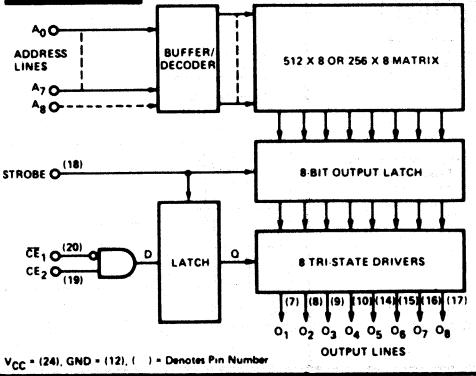

VCC = (24), GND = (12), ( ) = Denotes Pin Number

See PN 24bb
B199a See PN 24bg
B199b See PN 24bh
B199c See PN 24bi

B201

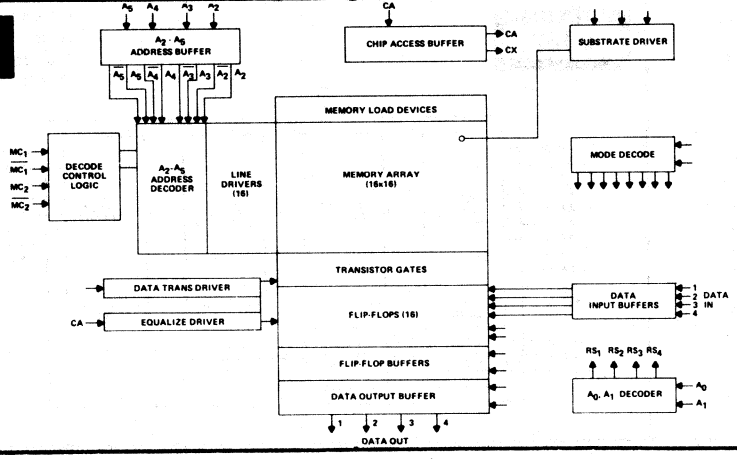

See PN 24dj

B205

See PN 24bk

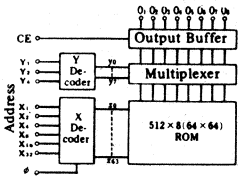

B206

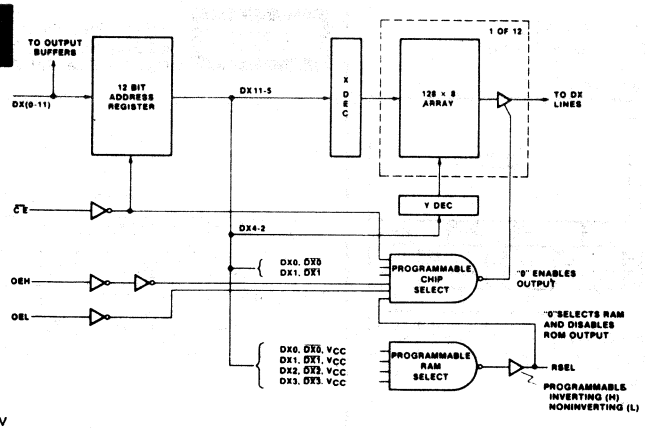

See PN 18 aw

B211

See PN 24bm

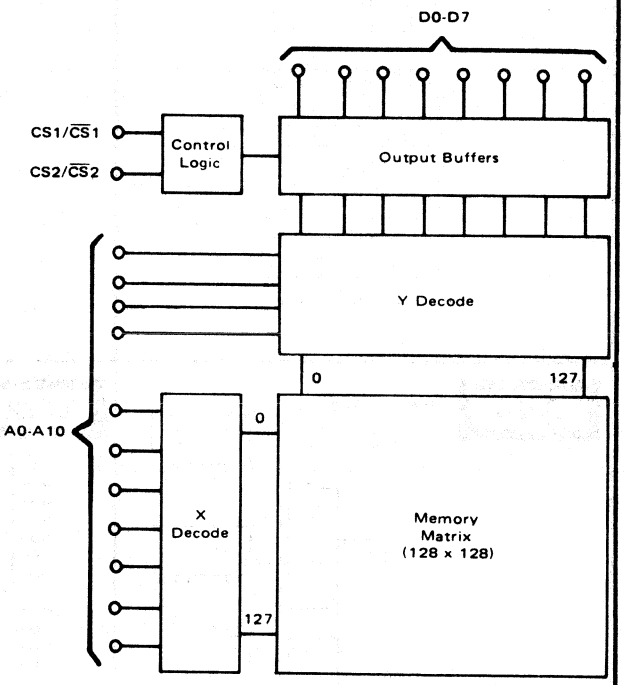

B212

See PN 18aw

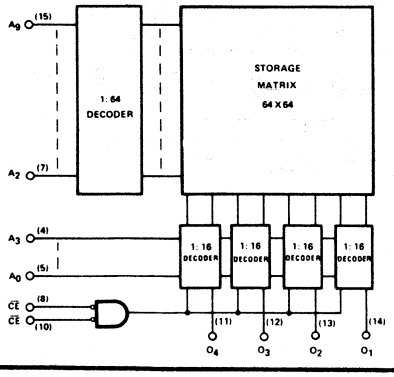

B213

See PN 18av

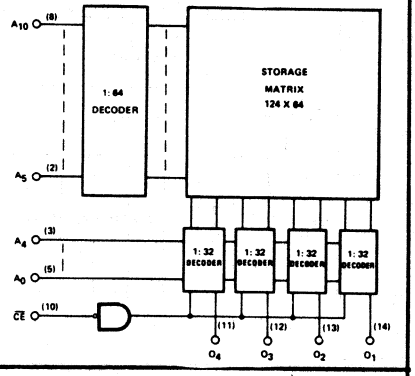

B214

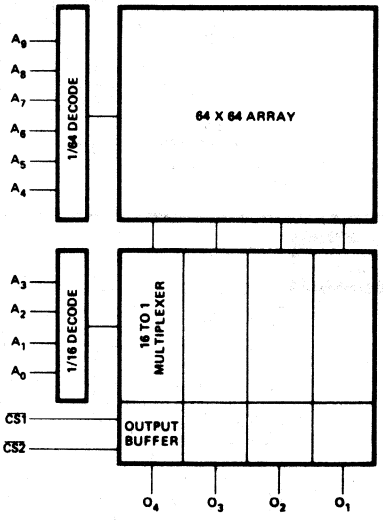

B215

See PN 28j

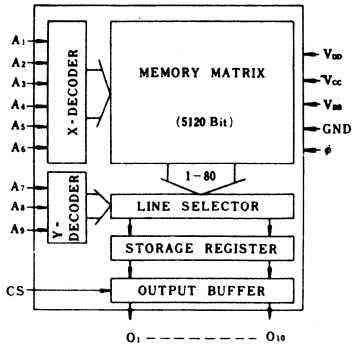

B216

See PN 28K

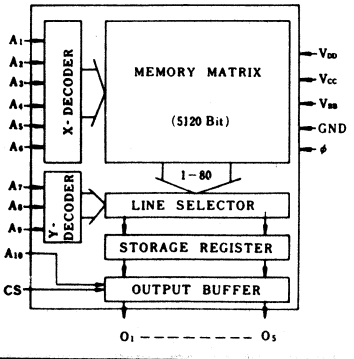

B217

See PN 24bn

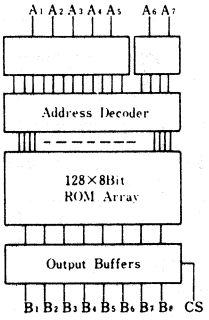

B218

See PN 24bo

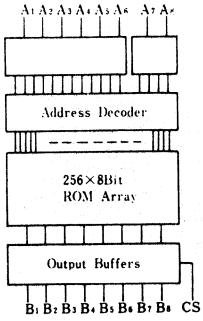

B219

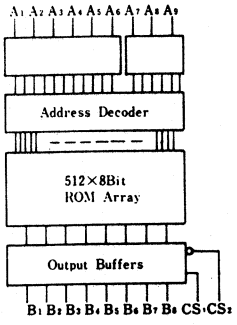

B220

See PN 24bg

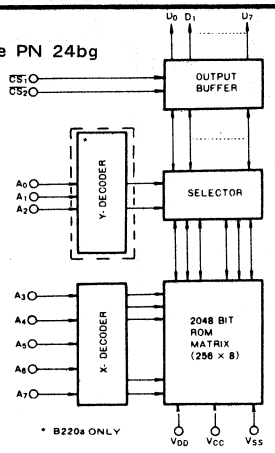

B222

222a PN 18ay
B222 See PN 18ax

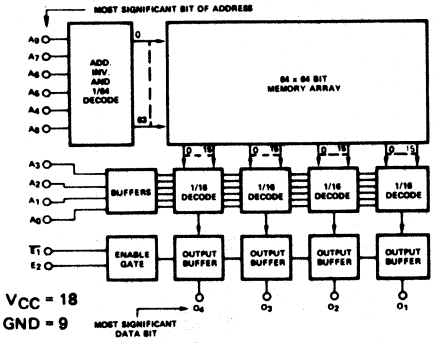

B226

B226 See PN 24bs
B226a See PN 24bt
B226b See PN 24ba

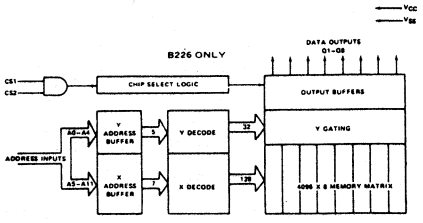

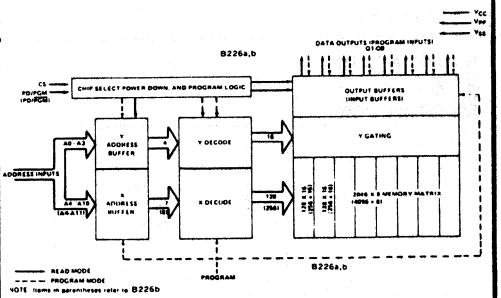

B225

See PN 24br

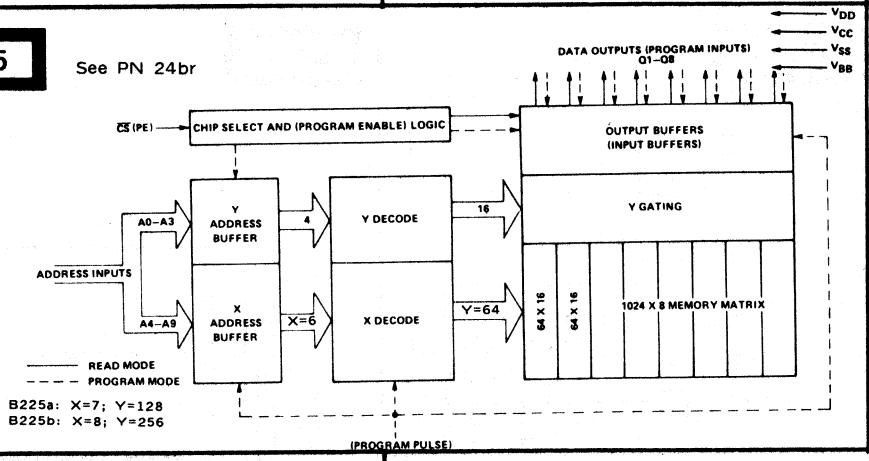

B227

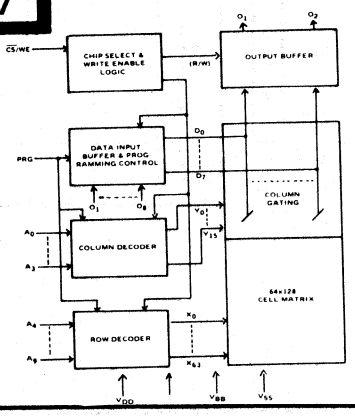

22. LOGIC/BLOCK DRAWINGS

IN DRAWING NUMBER SEQUENCE

B231

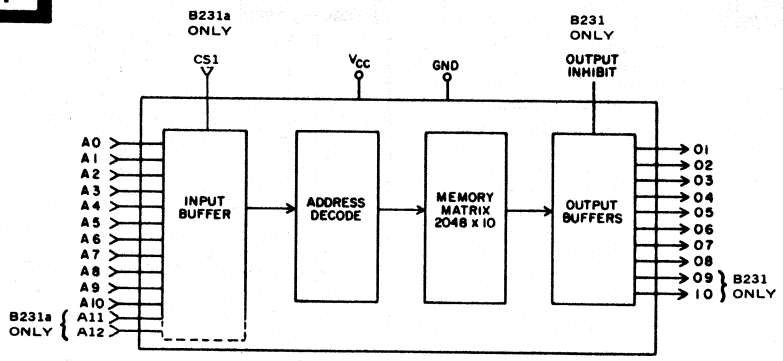

B234

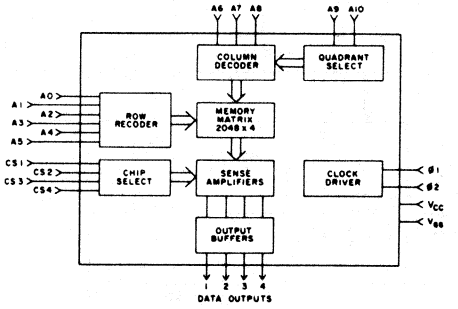

B232

See PN 24u

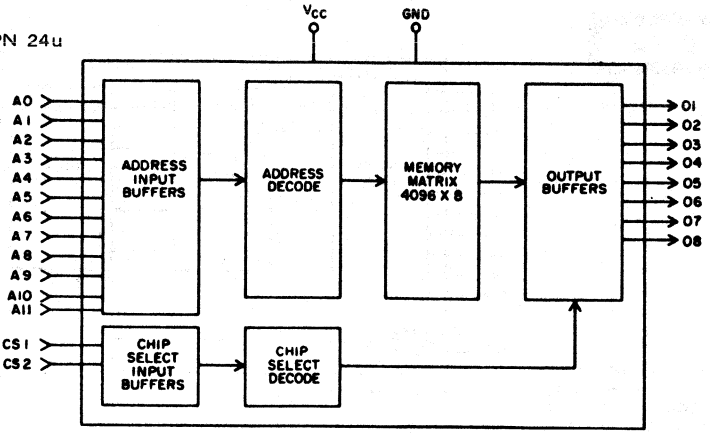

B232a See PN 24 hc
B232b See PN 24 hp
B232c See PN 24 hb
B232d See PN 24bs

NC*
CS CS*

B235

See PN 24cd

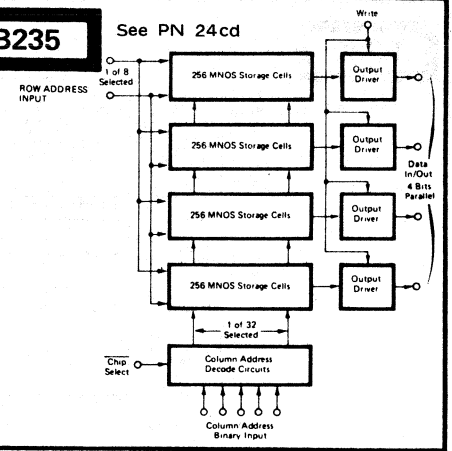

B233

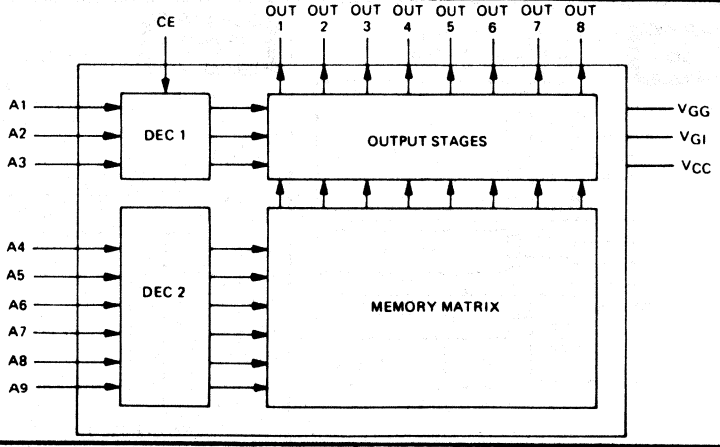

B233 See PN 24by
B233a See PNI6ce
B233b See PN 24bz
B233c See PN 24ca
B233d See PN 24cb

B237

B237 See PN 28m

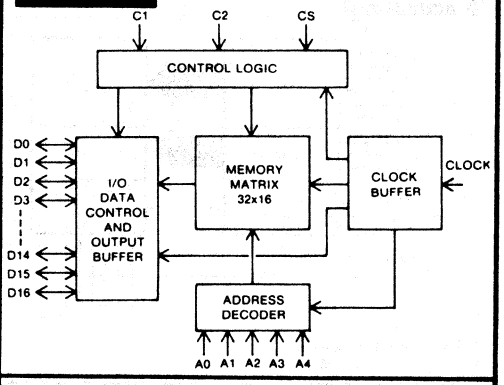

B236

B236a: NO PIN CONNECTIONS SPECIFIED

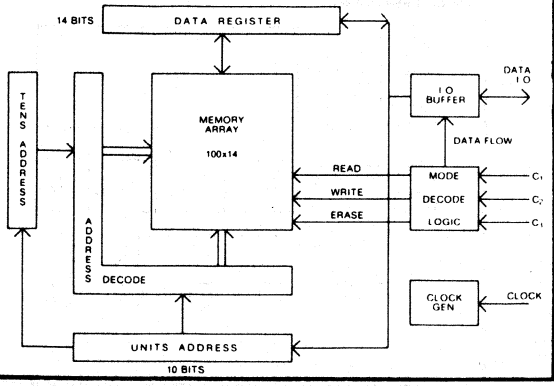

B238

B238 See PN 24ce, cf

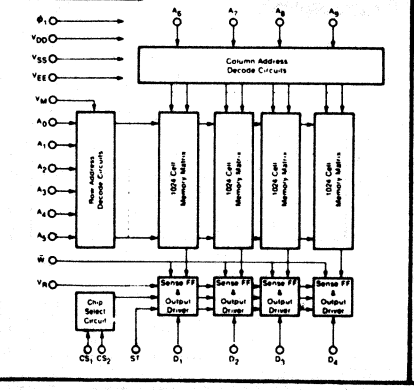

B239

B239 See 24cg

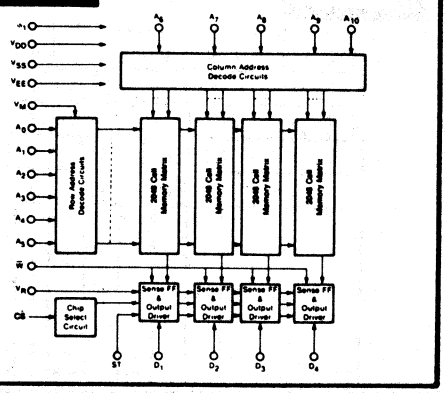

B240

B240 See PN 22av

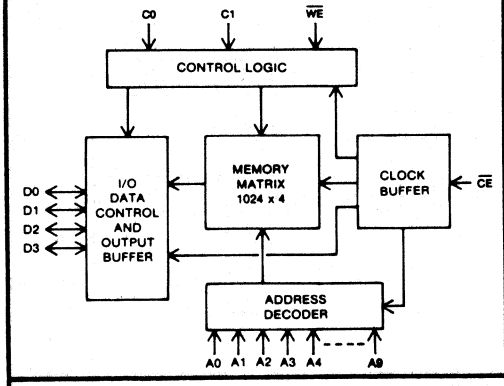

B246

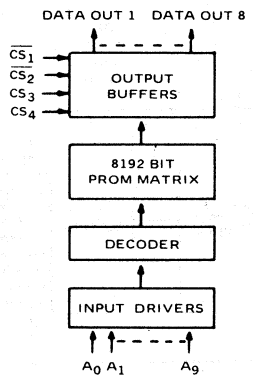

B262

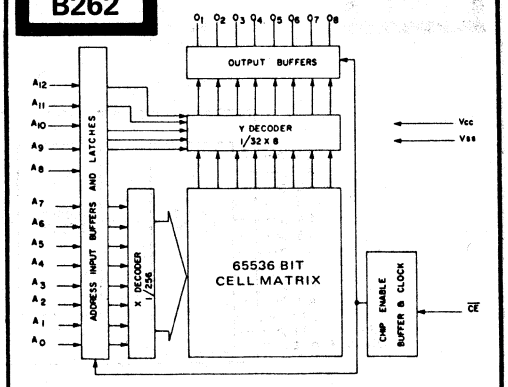

B262 See PN 24cq

B250

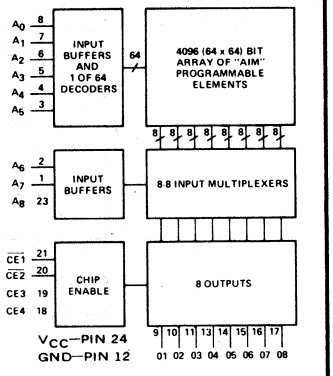

B254

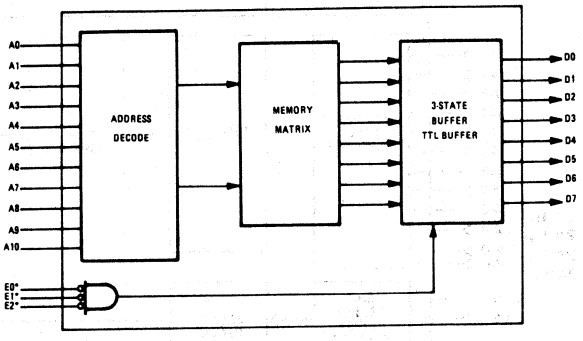

*Active level defined by the customer.

B254 See PN 24ci
B254a See PN 24s
B254b See PN 24t
B254c See PN 24cj

B255

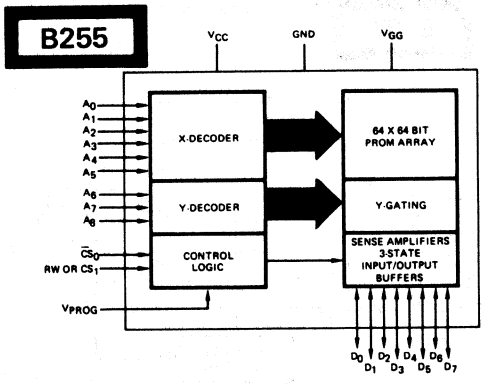

B255 See PN 24ck
B255 See PN 24cm

B256

B256 See PN 24cn
B256a See PN 24co

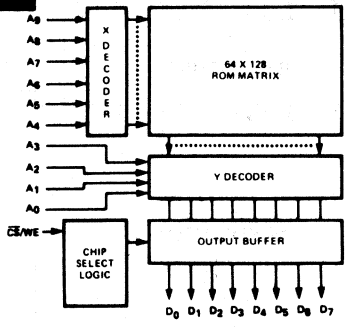

B263

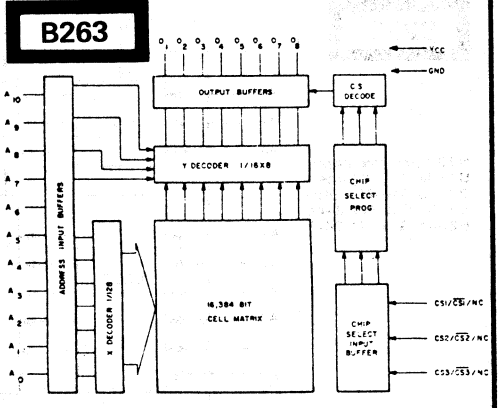

B263 See PN 24cr

B258

B258 See PN 24av

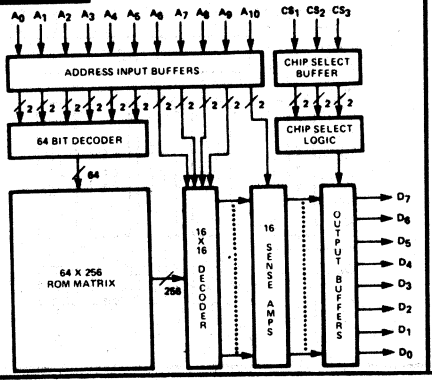

B266

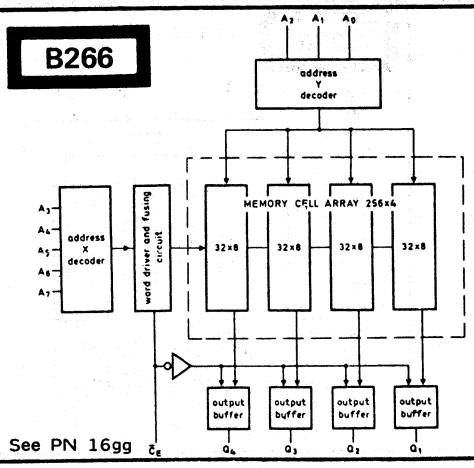

See PN 16gg

B267

* B267a — 1 OF 128 DECODER
** B267a — 8192-BIT CELL 128x64

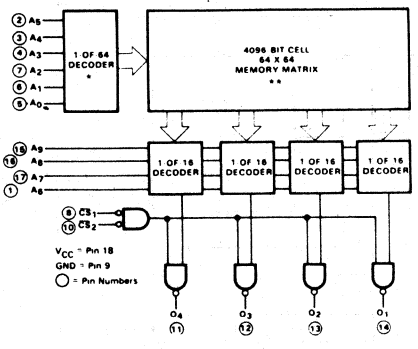

B268

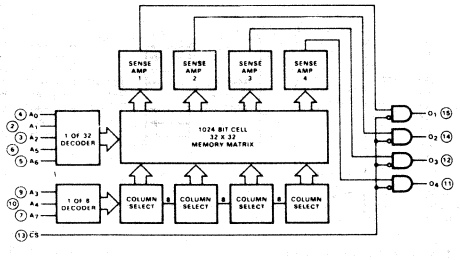

V_{CP} GND (Read only) - Pin 1
V_{CP} +12 V (Programming only) - Pin 1
V_{CC} GND Pin 16
V_{EE} Pin 8
○ Pin Numbers

B269

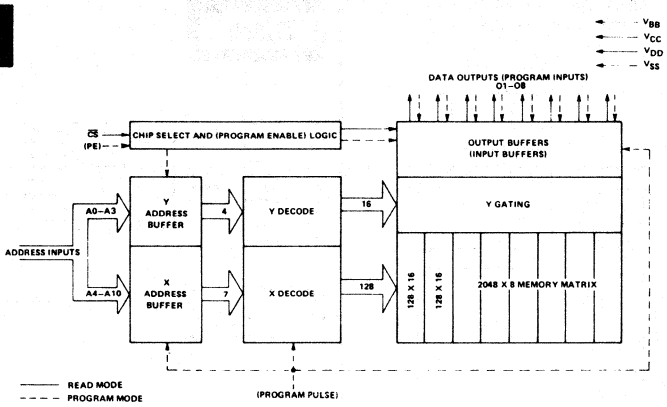

See PN 24cs

B273

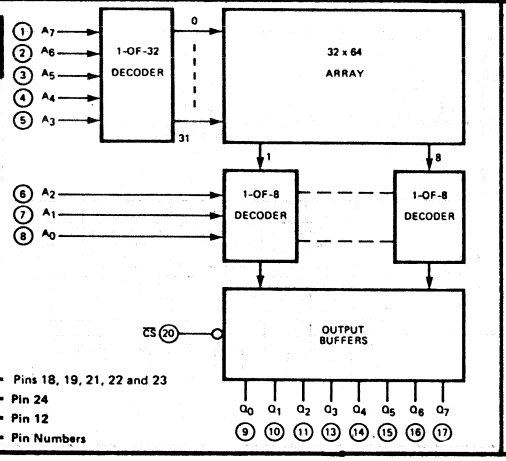

NC = Pins 18, 19, 21, 22 and 23
V_{DD} = Pin 24
V_{SS} = Pin 12
○ = Pin Numbers

B274

See PN 24cu

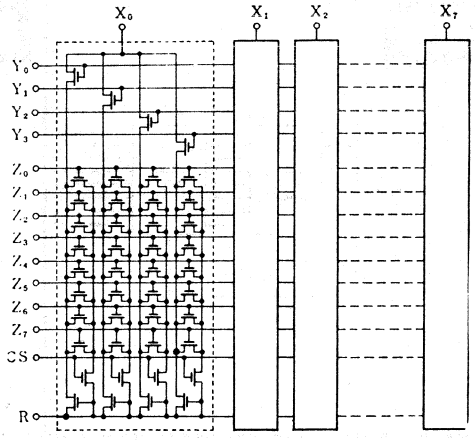

* CONNECT SUBSTRATE EXTERNALLY TO GROUND

B277

See PN 24cv

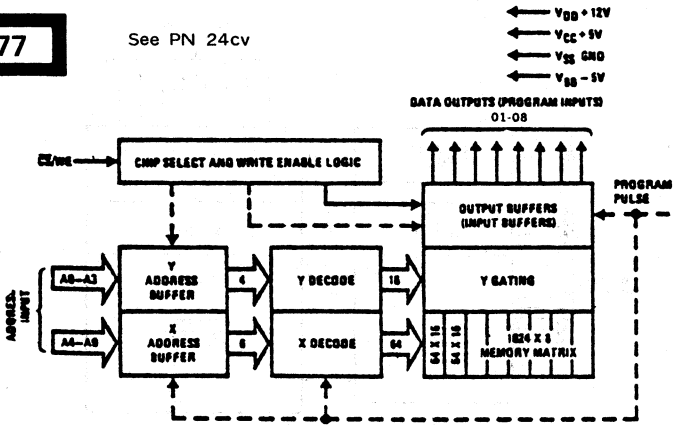

B279

B279 See PN 16b

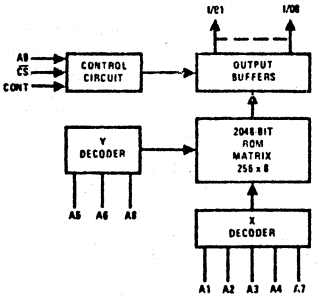

B282

B282 See PN 24cc

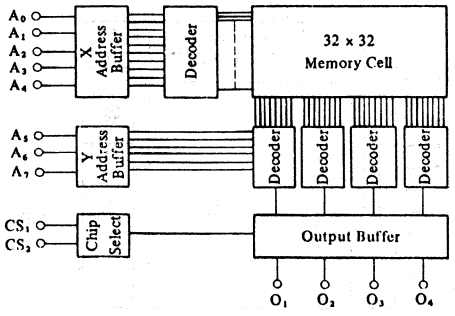

B287

B287 See PN 24db

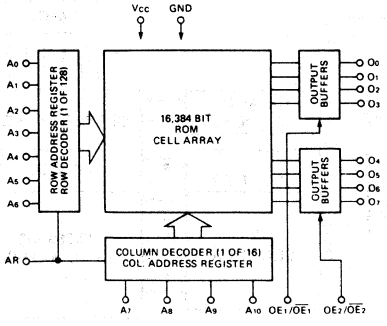

B288

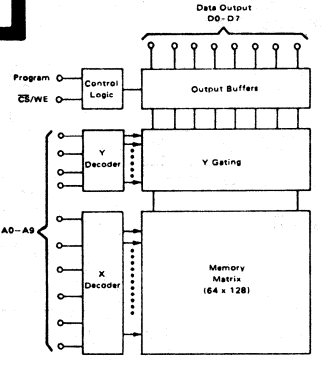

B288 See PN 24dc

22. LOGIC/BLOCK DRAWINGS

IN DRAWING NUMBER SEQUENCE

B289

B289 See PN 24dd
B289a See PN 24de

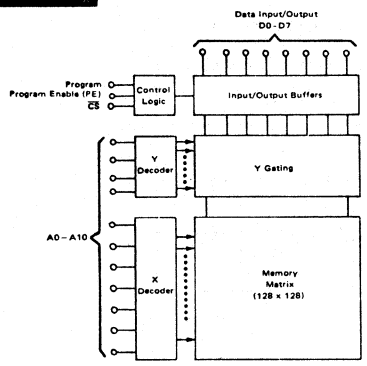

B290

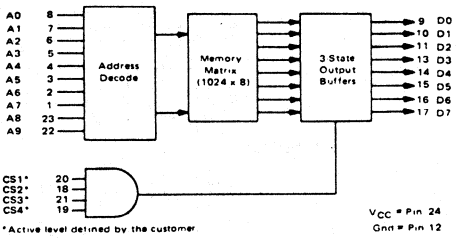

*Active level defined by the customer

V_{CC} = Pin 24
Gnd = Pin 12

B291

B291 See PN 24df
B291a See PN 24dg

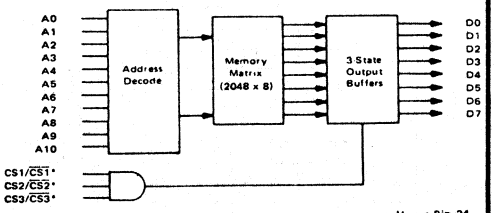

* Active level defined by the user.

V_{CC} = Pin 24
V_{SS} = Pin 12

B292

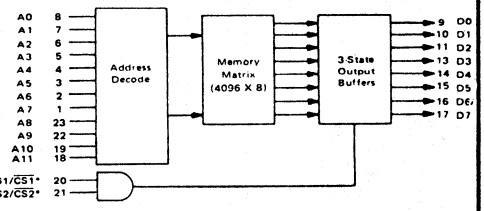

* Active level defined by the user.

V_{CC} = Pin 24
Gnd = Pin 12

B293

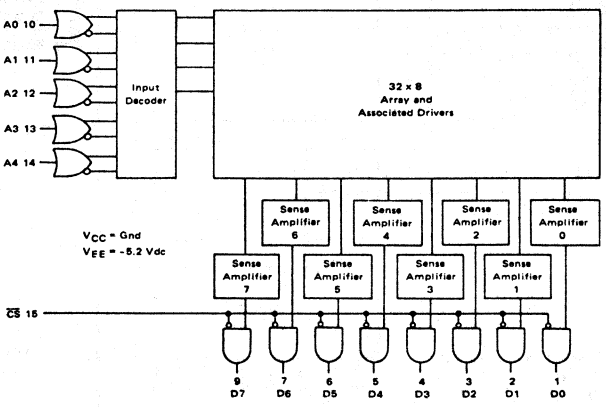

B293 See PN 16ck

B295

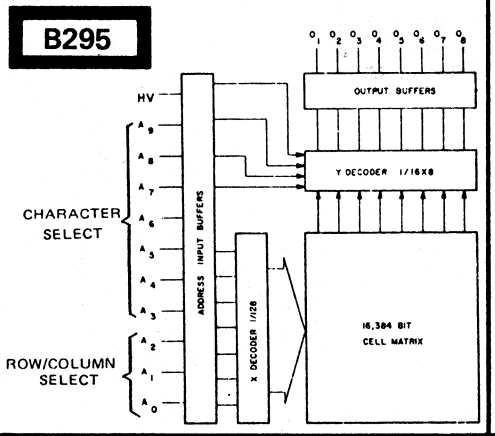

B296

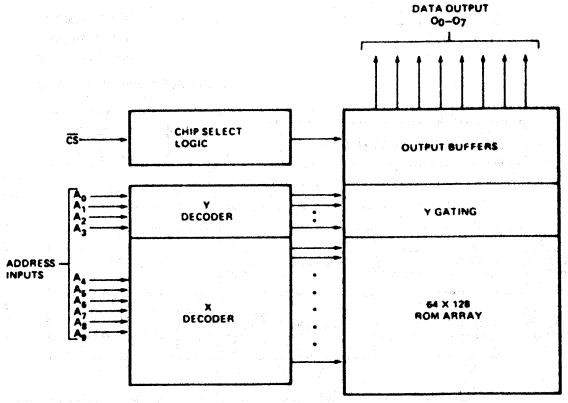

B296a See PN 24di
B296b See PN 24dj

B297

B297 See PN 24dk

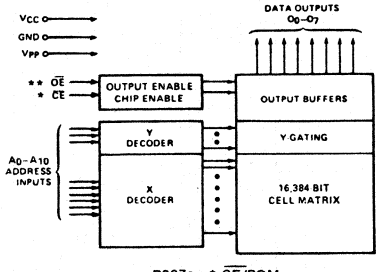

B297a: * CE/PGM
B297b: * PD/PGM
** CS

B299

B299 See PN 24dn

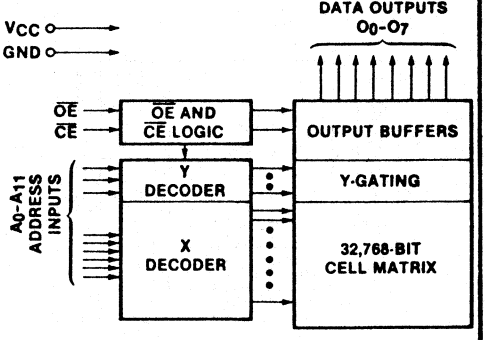

B302

B302 See PN 24do

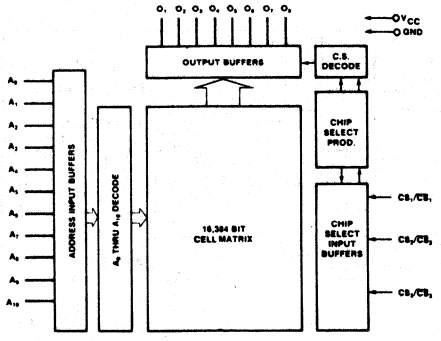

22. LOGIC/BLOCK DRAWINGS

IN DRAWING NUMBER SEQUENCE

B304

B304 see PN 24dq

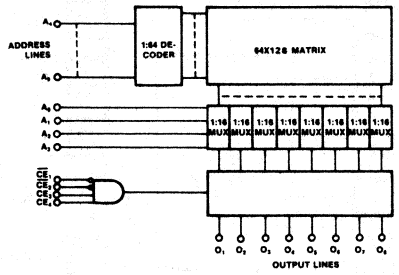

B305

B305 See PN 24dr

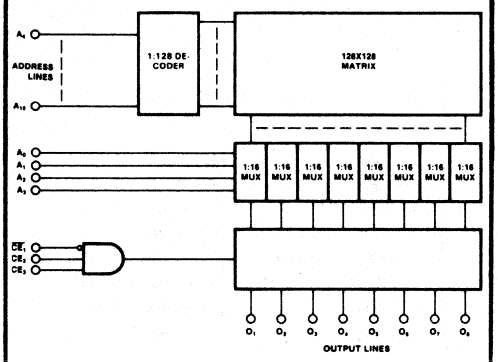

B311

B311 See PN 16ck

B 311a "To Read" Pin 13 — PS

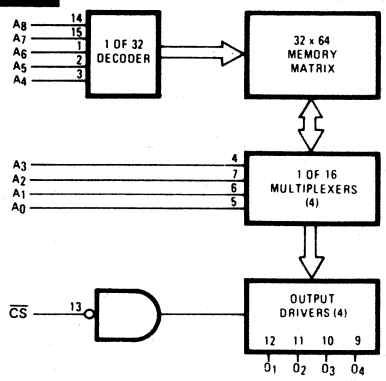

B306

B306 See PN 24ds

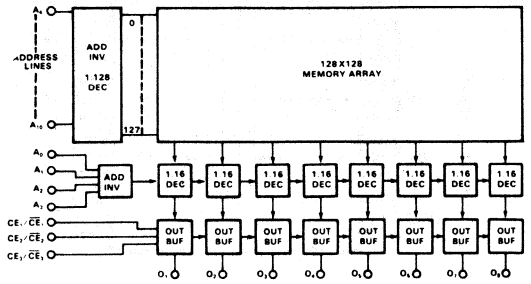

B308

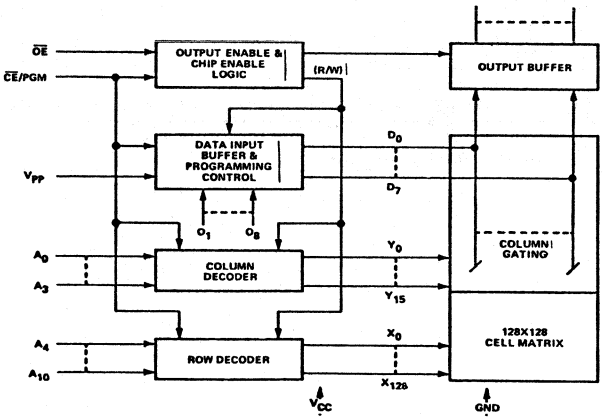

B315

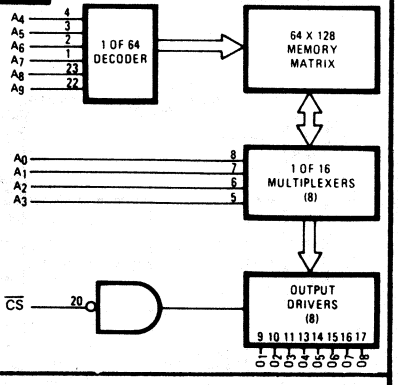

B328

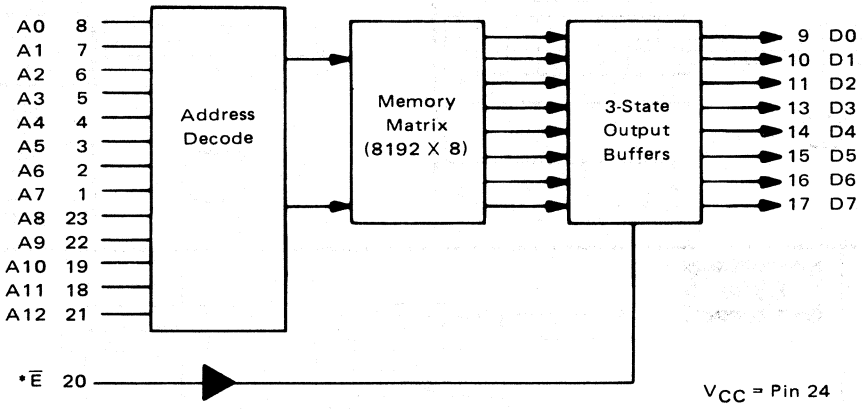

*Active level defined by the user.

V_{CC} = Pin 24
V_{SS} = Pin 12

B329

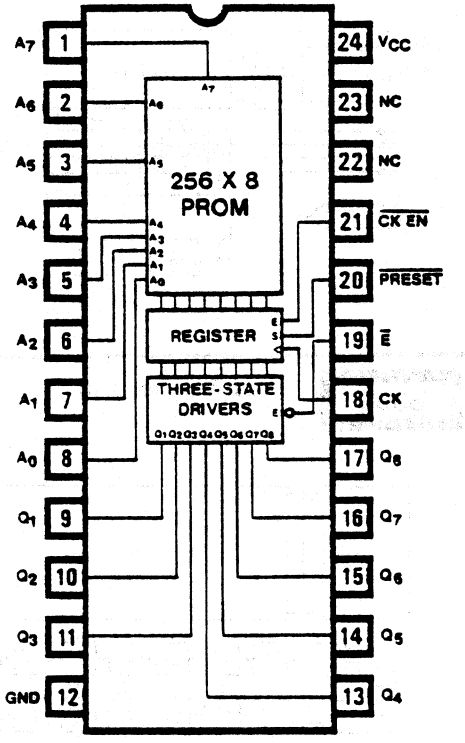

B330

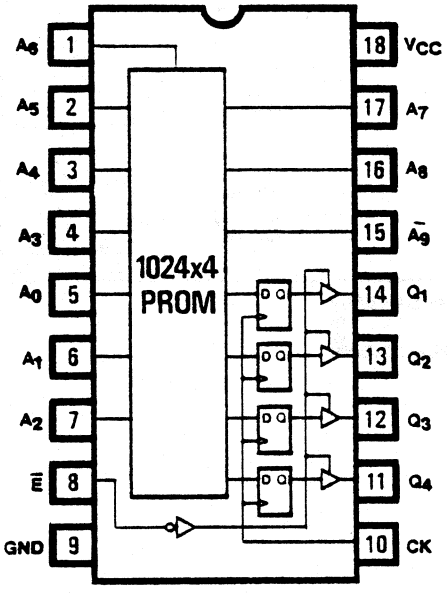

B331

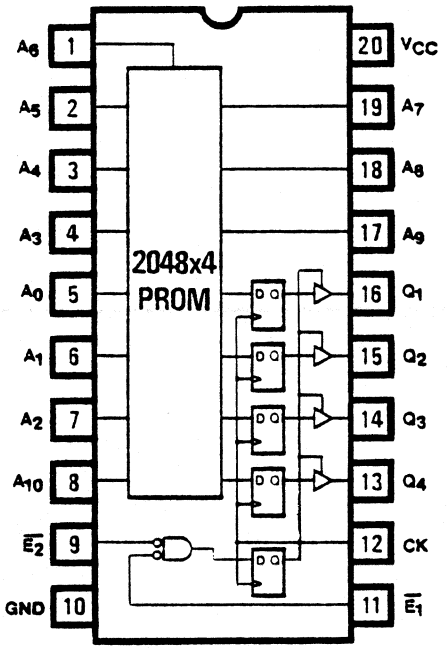

B332

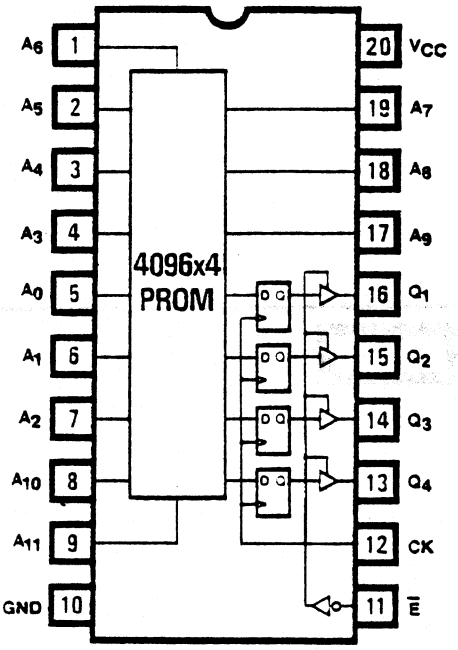

B333

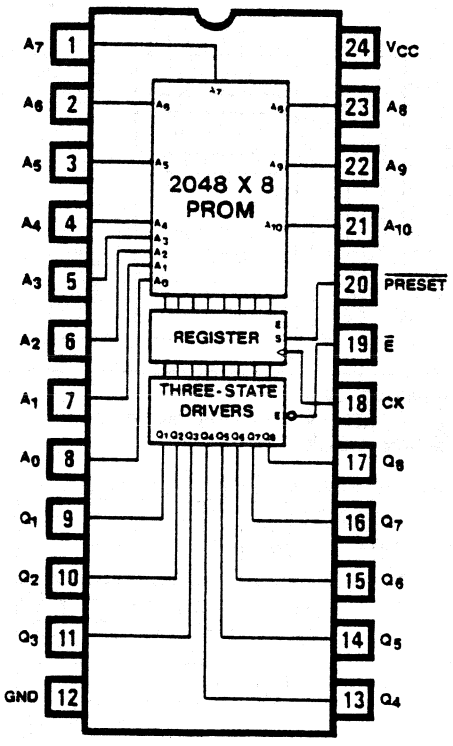

B334

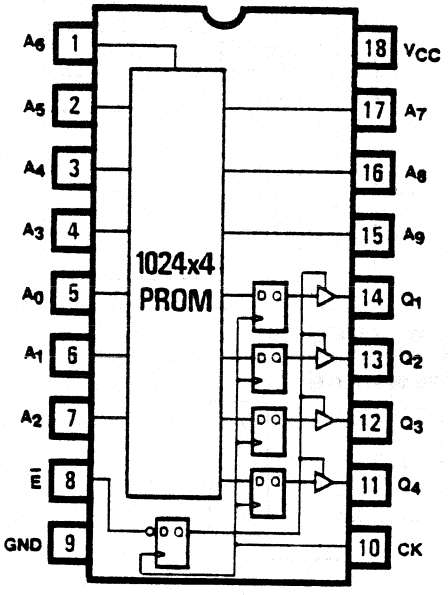

B335

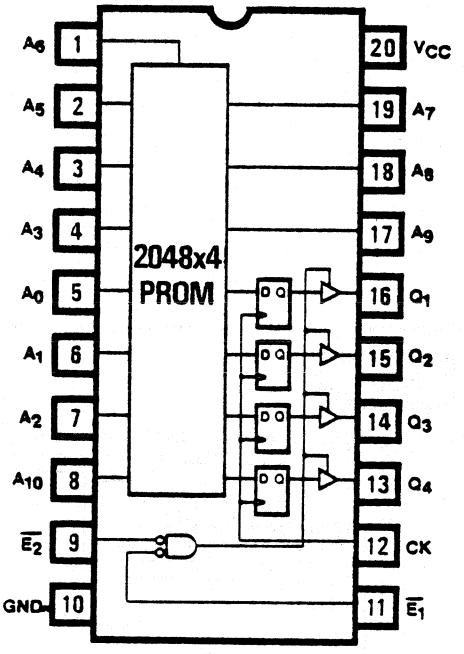

B336

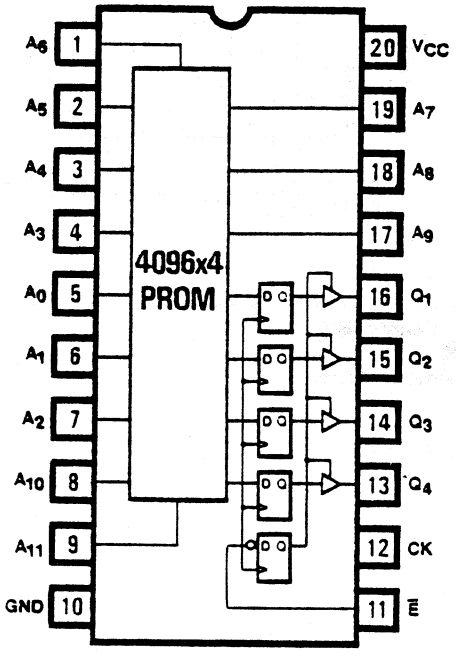

B337

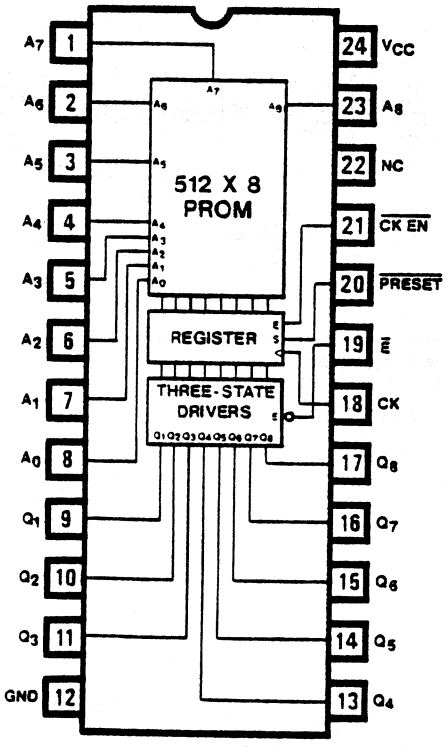

B338

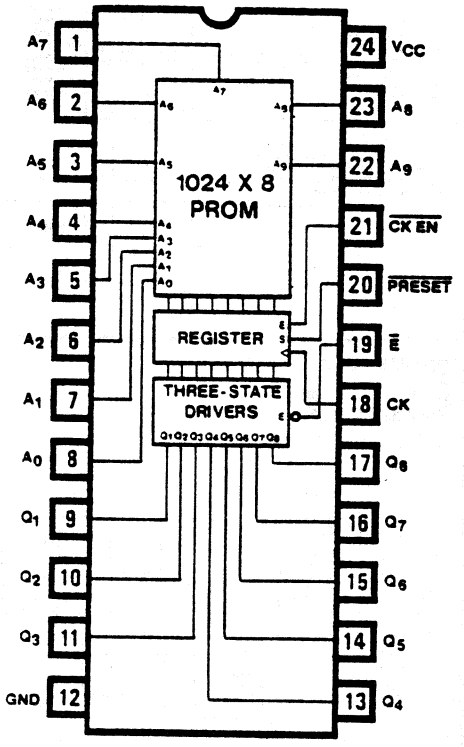

B349

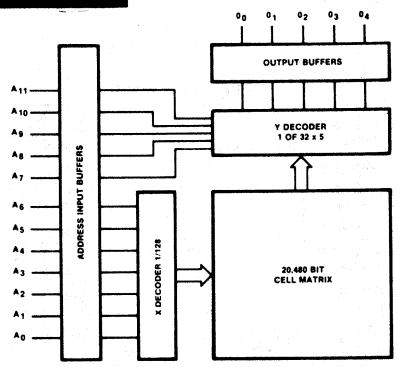

B350

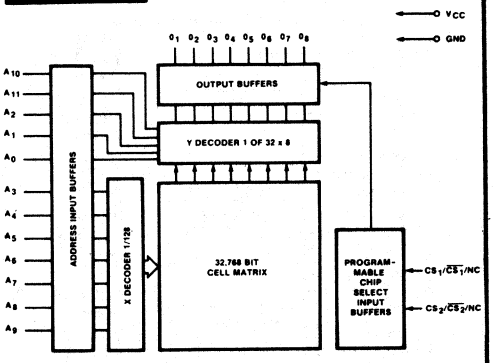

B351

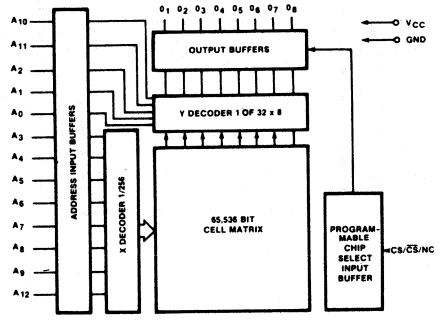

B352

B352 See PN 28q

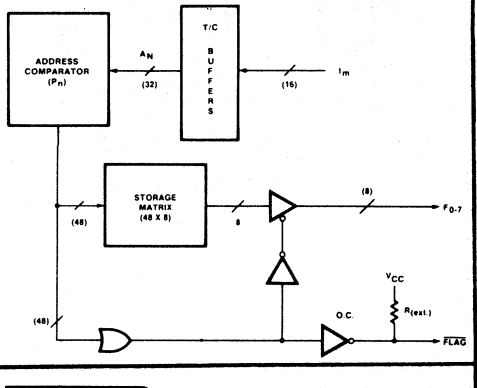

B353

B353 See PN 20q

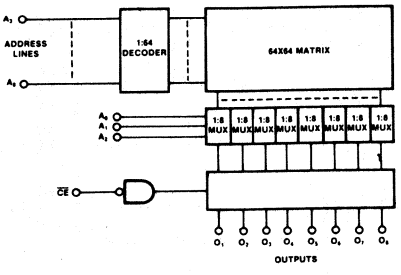

B354

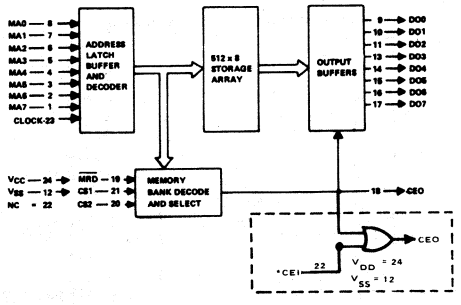

B355

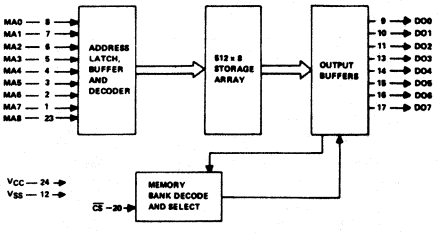

B356

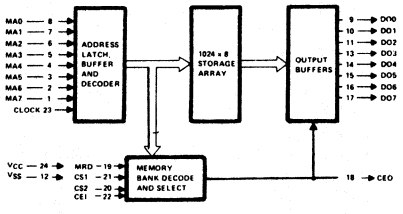

B357

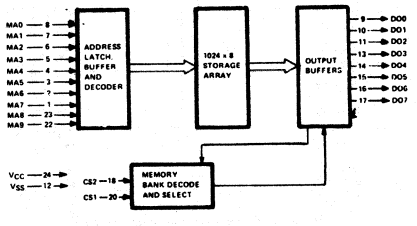

B358

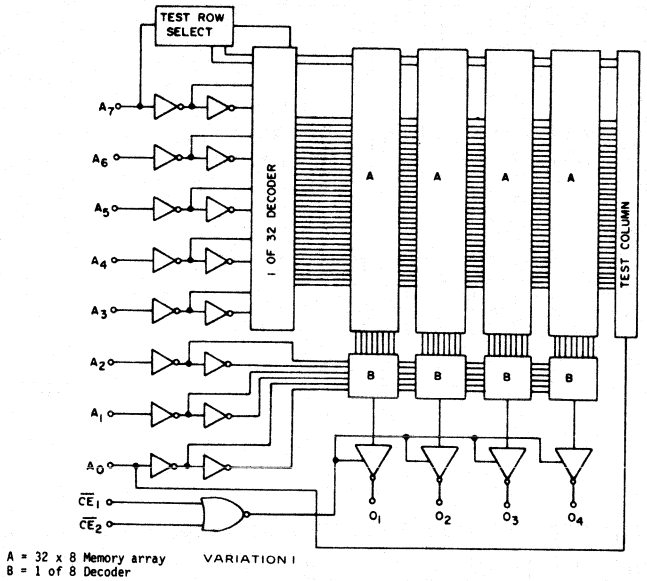

A = 32 x 8 Memory array
B = 1 of 8 Decoder

VARIATION I

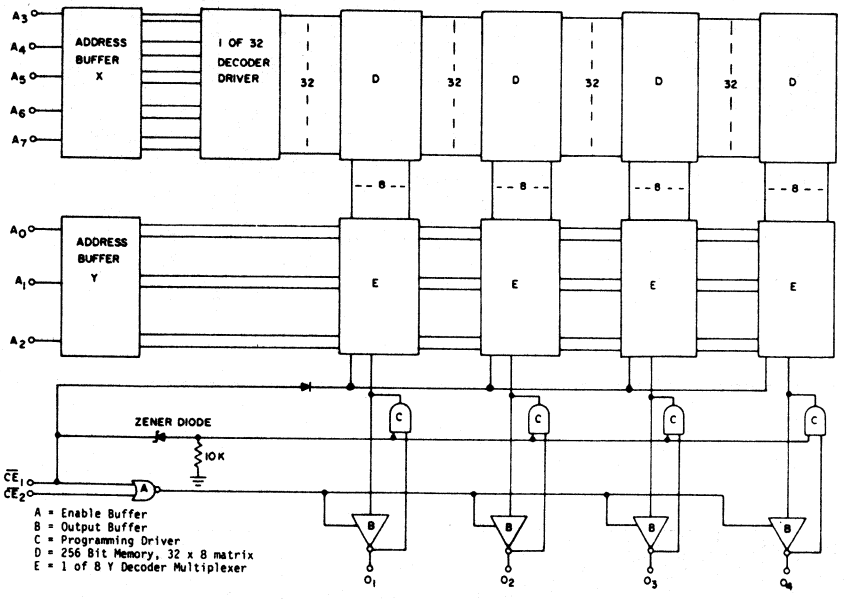

A = Enable Buffer
B = Output Buffer
C = Programming Driver
D = 256 Bit Memory, 32 x 8 matrix
E = 1 of 8 Y Decoder Multiplexer

VARIATION II

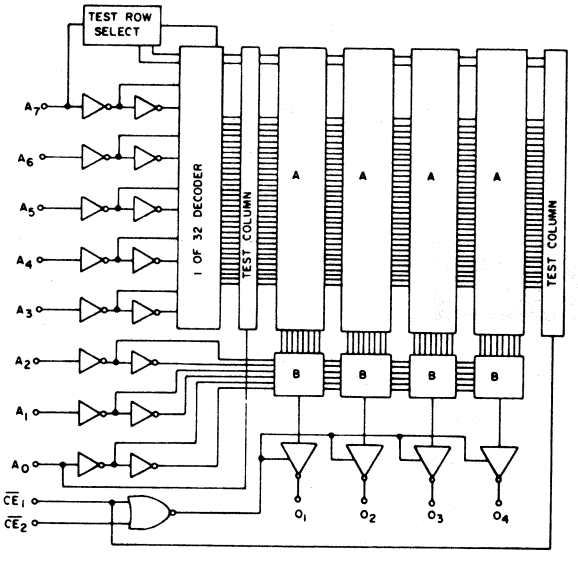

VARIATION IV

A = 32 x 8 Memory Array
B = 1 of 8 Decoder

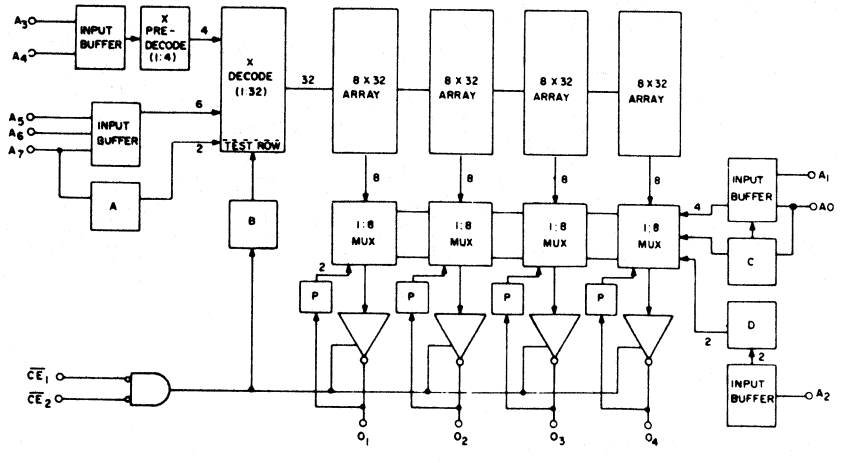

VARIATION III

B359

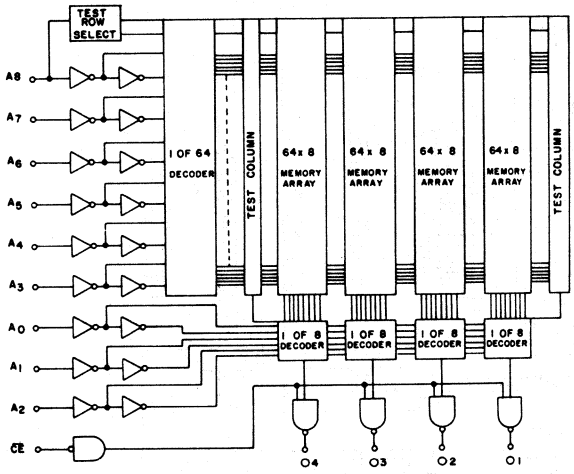

VARIATION I

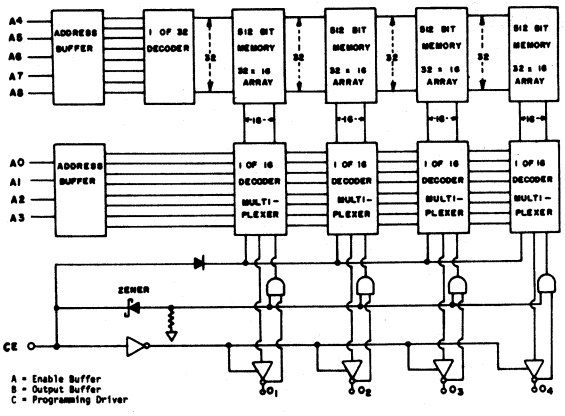

VARIATION II

B359 See PN 16cr

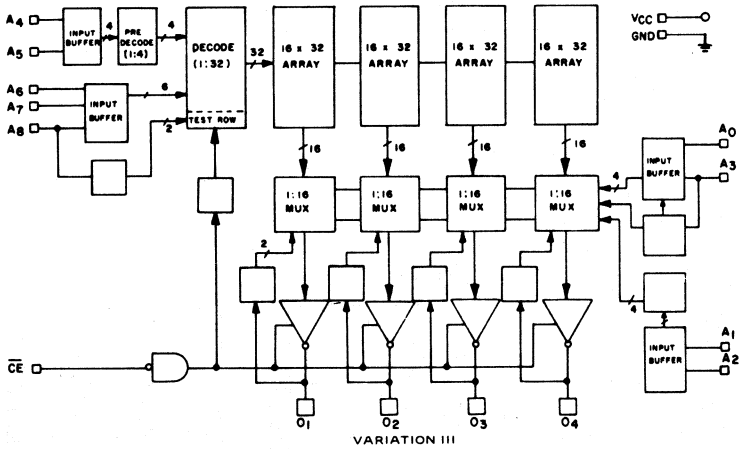

VARIATION III

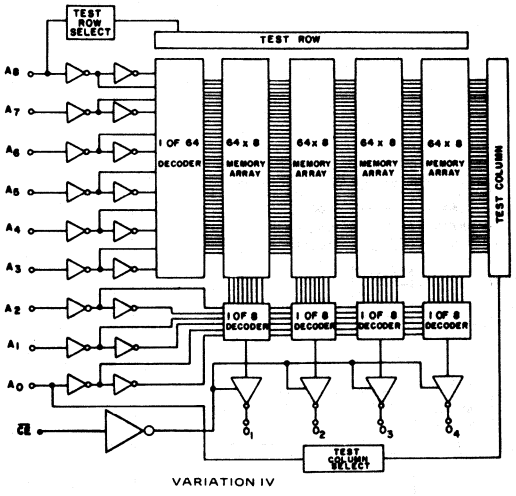

VARIATION IV

B360

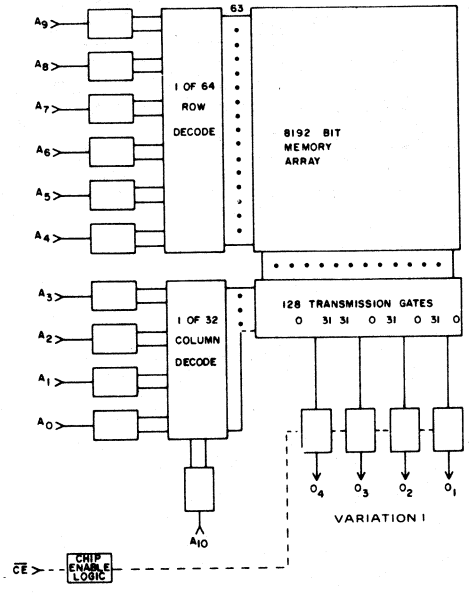

VARIATION I

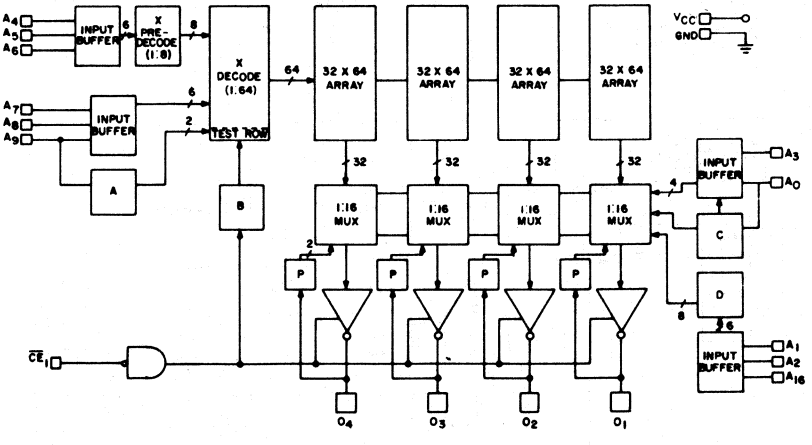

VARIATION II

B361

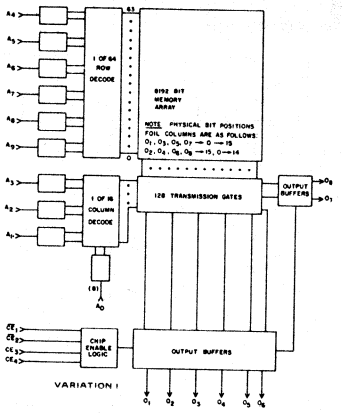

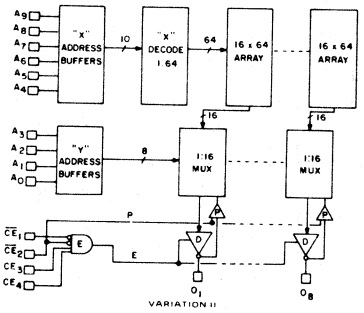

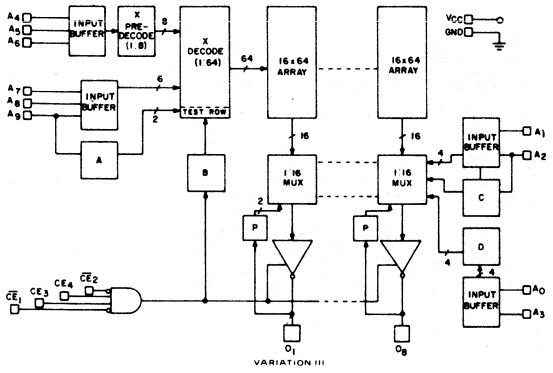

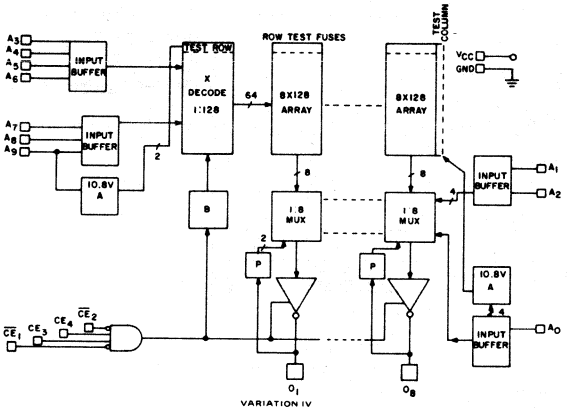

B366

B366 See PN 20n

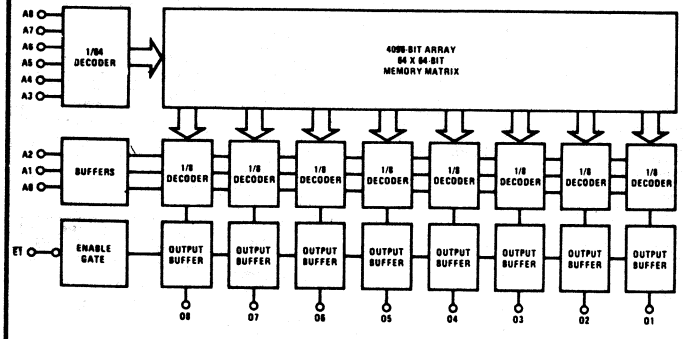

B370

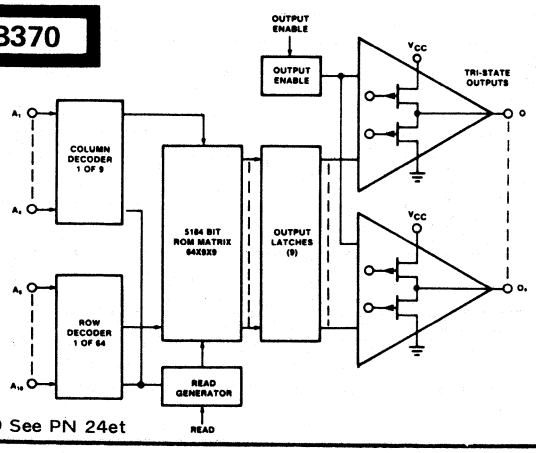

B370 See PN 24et

B371

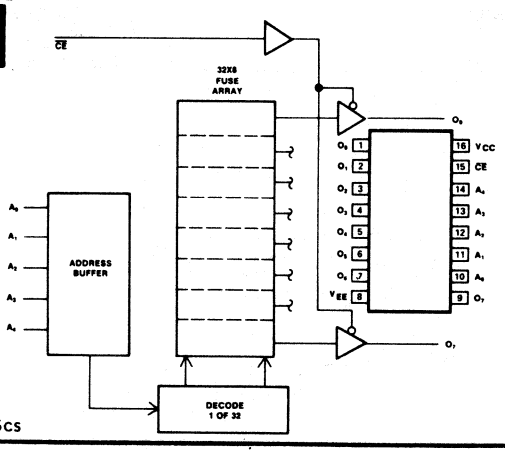

B371 See PN 16cs

22. LOGIC/BLOCK DRAWINGS

IN DRAWING NUMBER SEQUENCE

B372

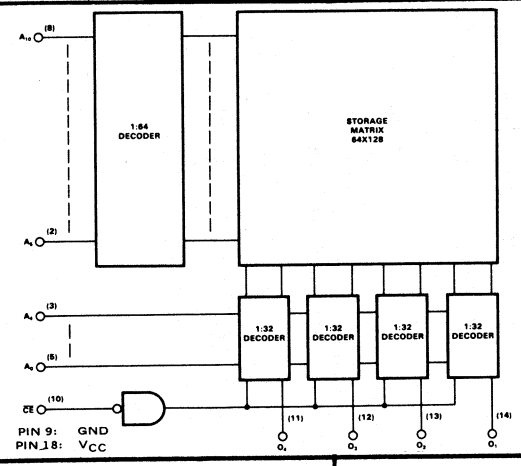

B373

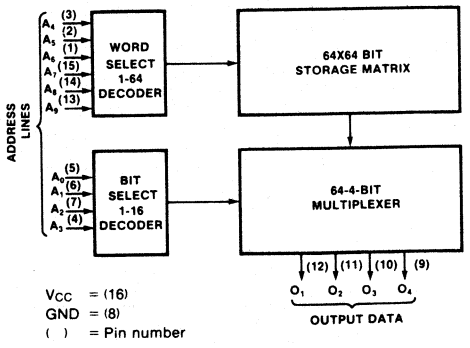

B375

B375 See PN 16ct

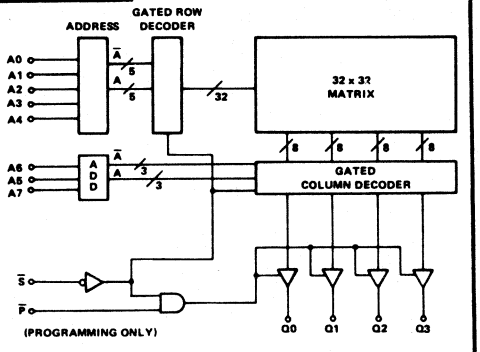

B377

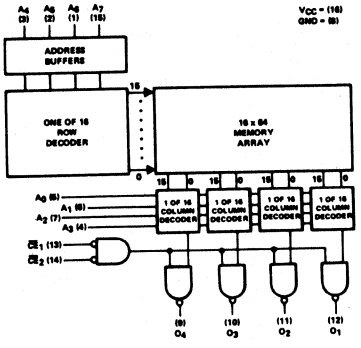

B382

B382 See PN 18as
B382a See PN 16by

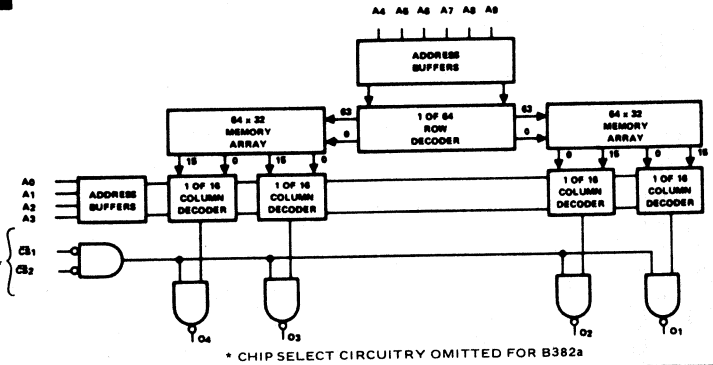

B384

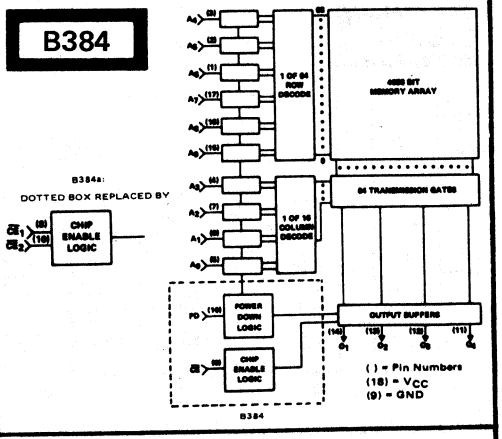

B386

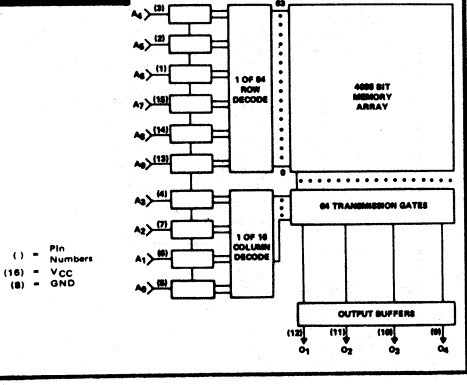

B388

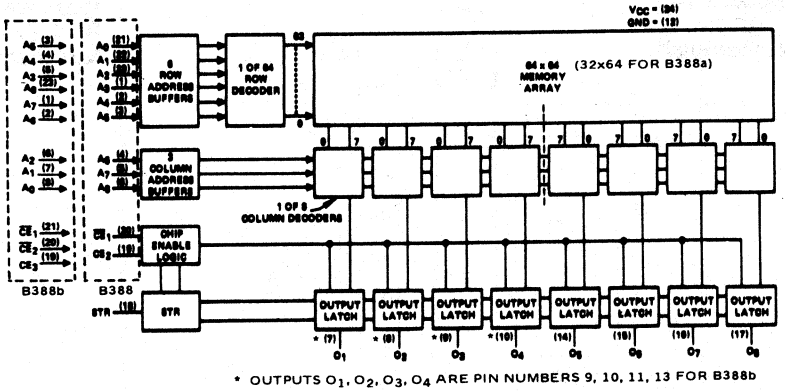

22. LOGIC/BLOCK DRAWINGS

IN DRAWING NUMBER SEQUENCE

B389

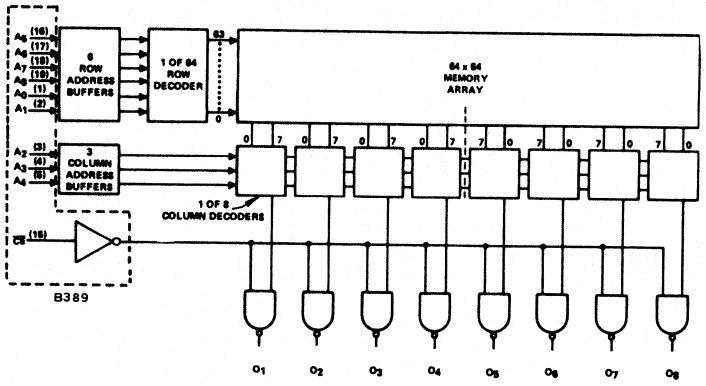

B390

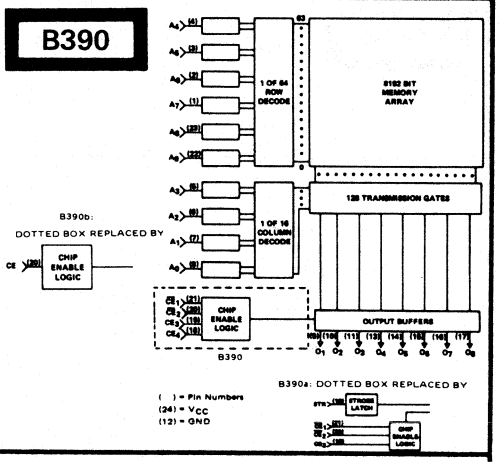

B391

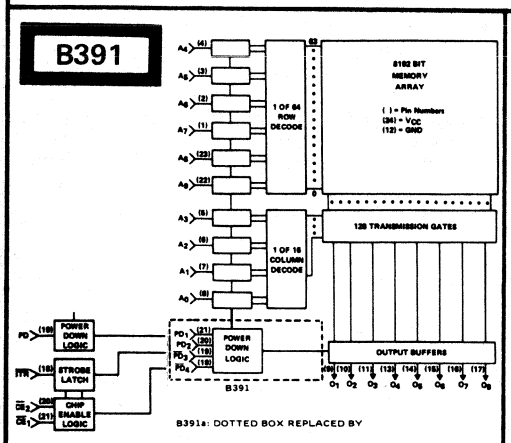

B393

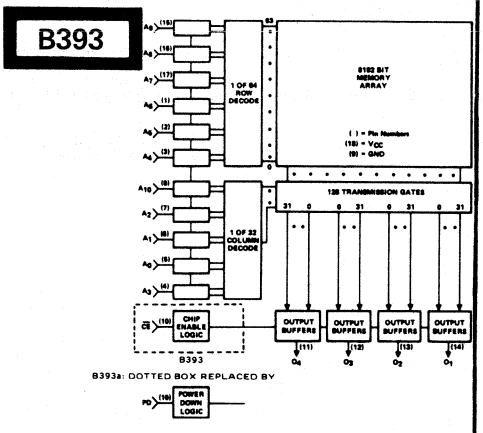

B397

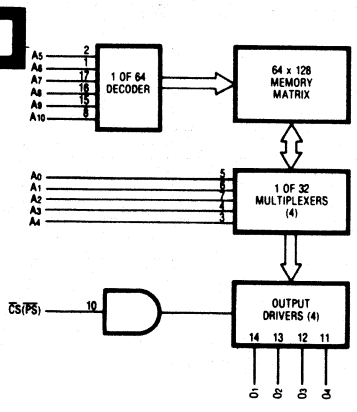

B398

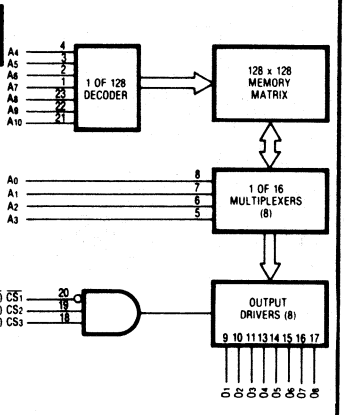

B401

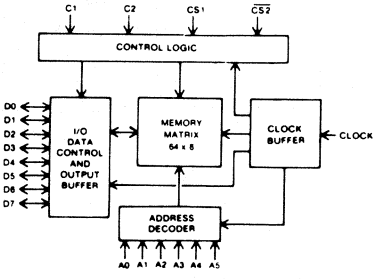

B405

Variations 1&2 See PN 18aw

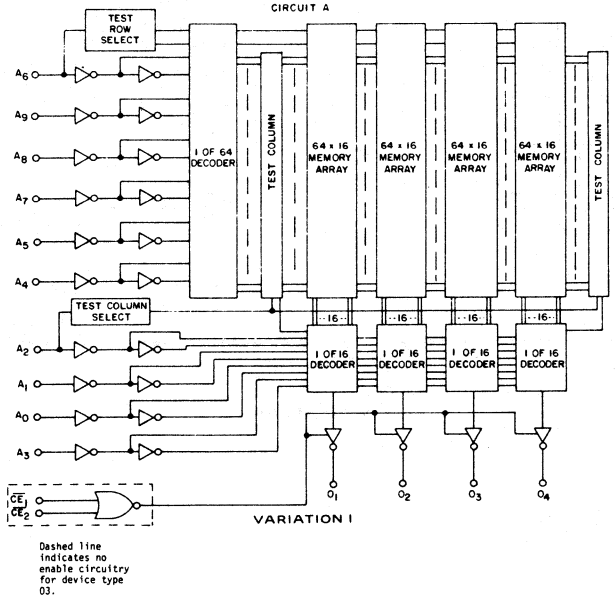

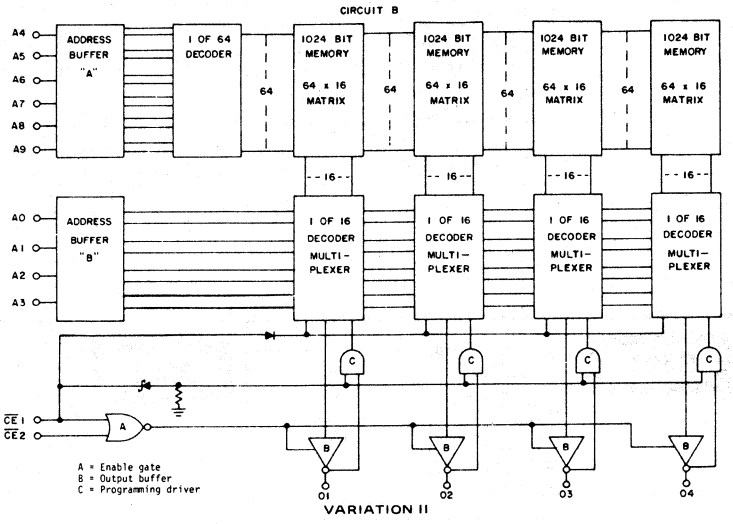

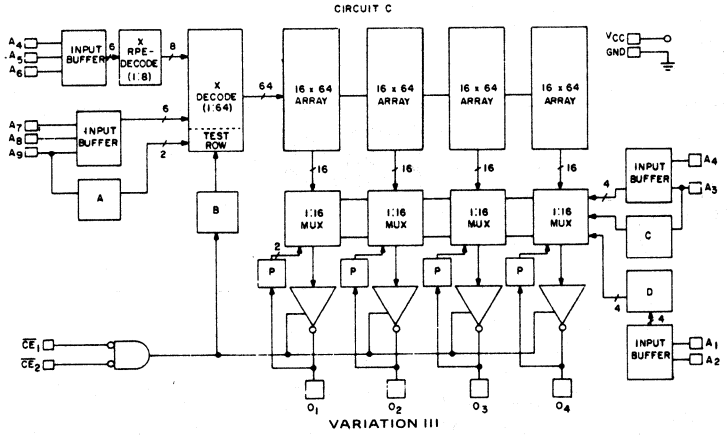

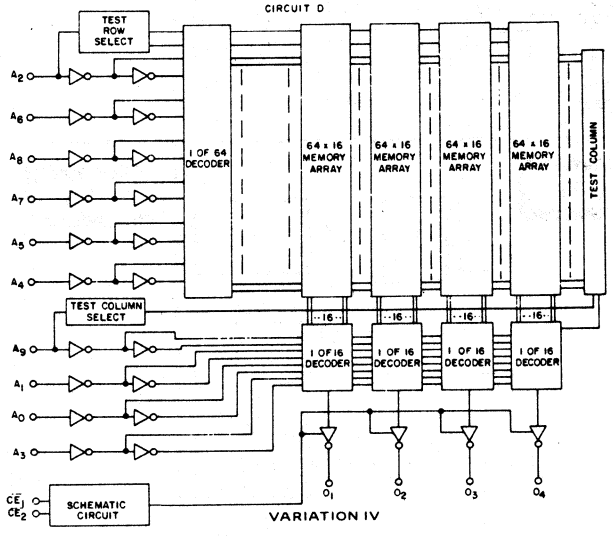

Variation III See PN 16by

B407

B407 See PN 24dk

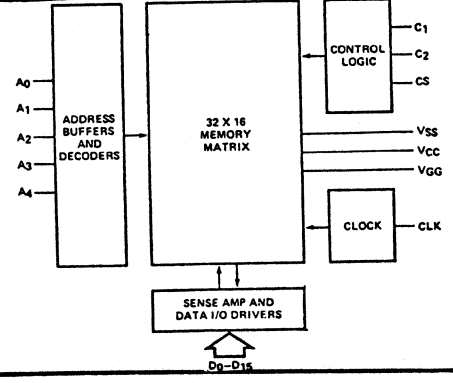

B408

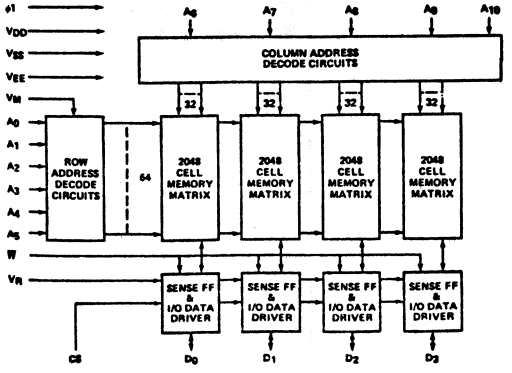

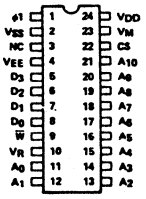

B408 See PN 28r

B409

B409 See PN 22ba

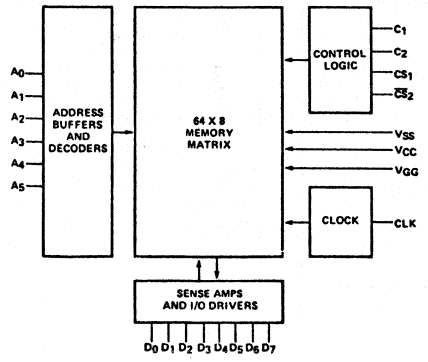

B410

B410 See PN 22bb

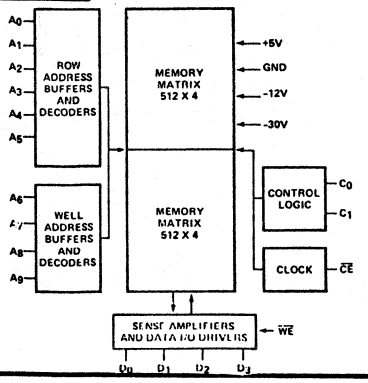

B411

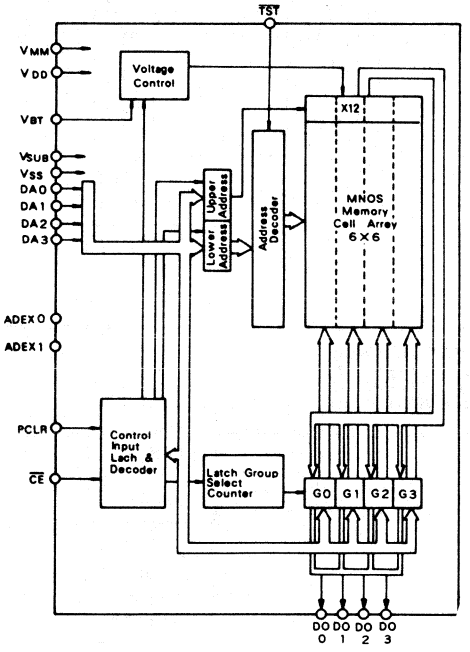

B412

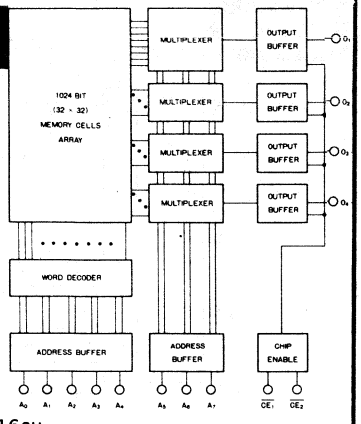

B412 See PN 16cu

B413

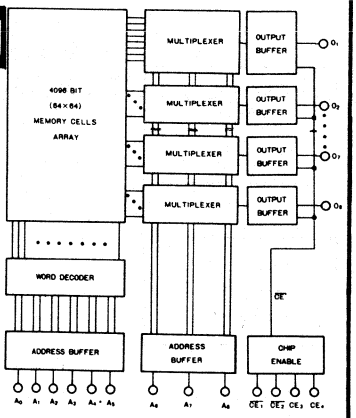

B413 See PN 24dp

B414

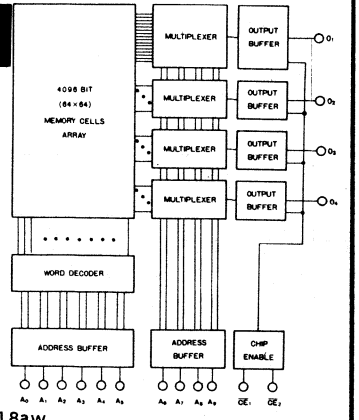

B414 See PN 18aw

B415

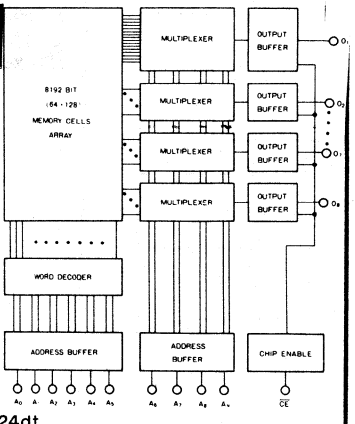

B415 See PN 24dt

B417

B417 See PN 24fa

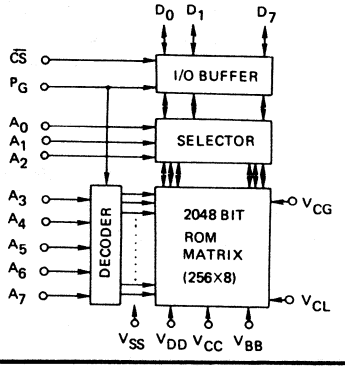

B418

B418 See PN 28h

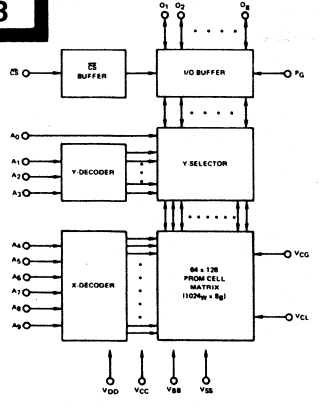

B419

B419 See PN 24fb

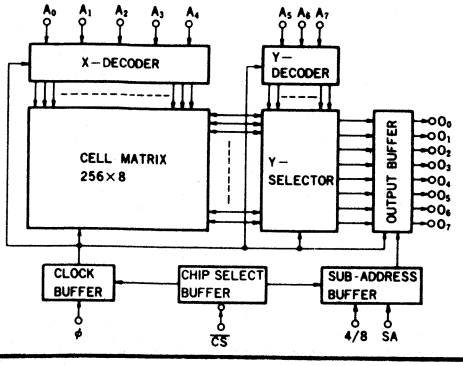

B420

B420 See PN 24fc

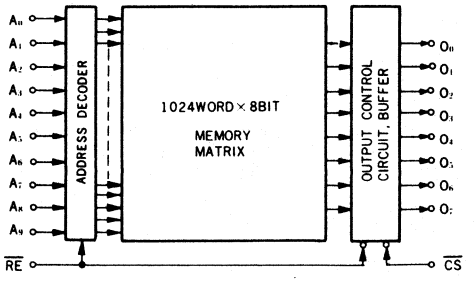

22. LOGIC/BLOCK DRAWINGS

IN DRAWING NUMBER SEQUENCE

B421

B421 see PN 28s

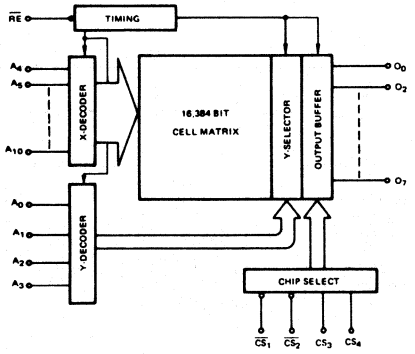

B422

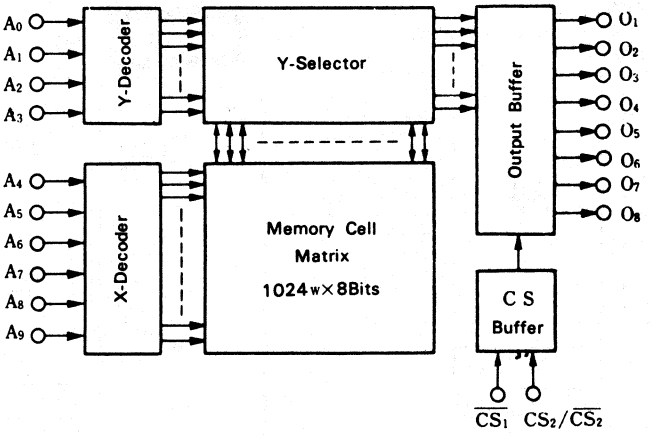

B422 see PNar

B423

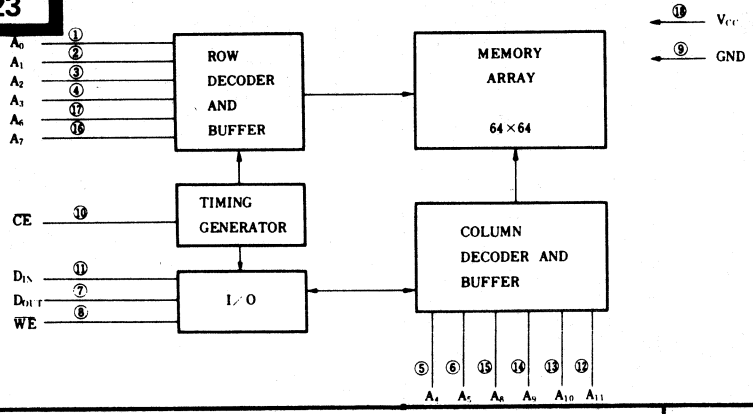

B424

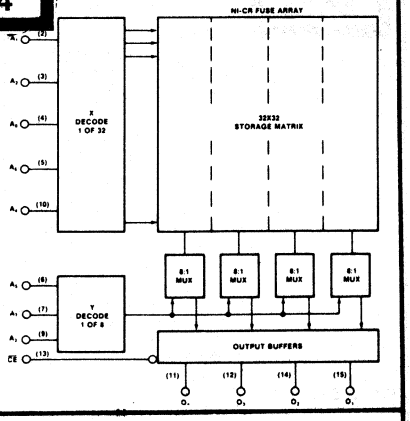

B425

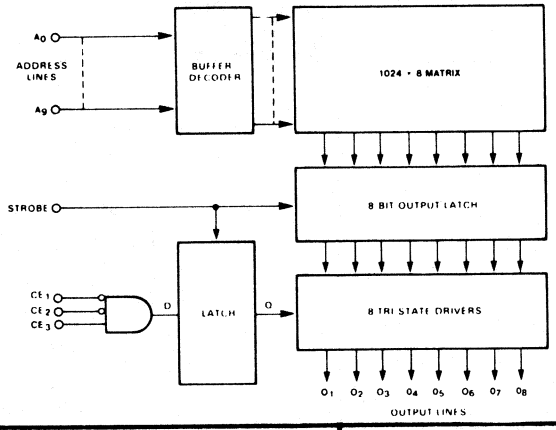

B427

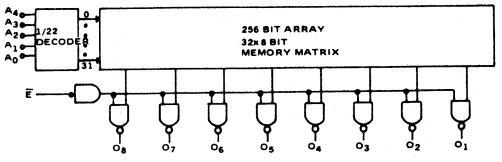

B428

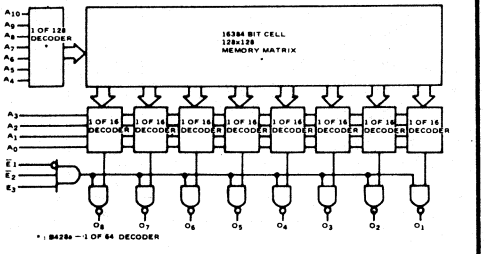

B429

B429 see PN24ff

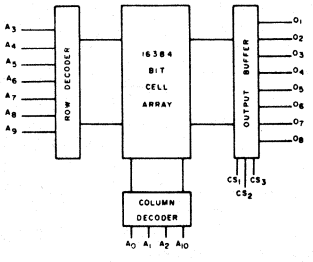

B430

B430 see PN 24fl

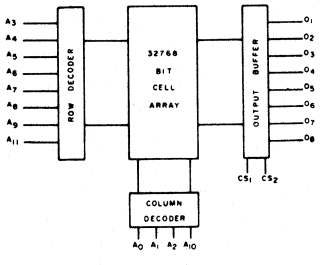

22. LOGIC/BLOCK DRAWINGS

IN DRAWING NUMBER SEQUENCE

B431

B431 See PN 24hb
B431a See PN 24hc

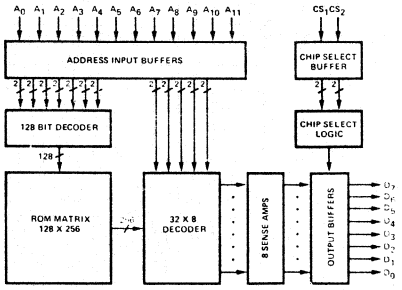

B432

B432 See PN 24ha

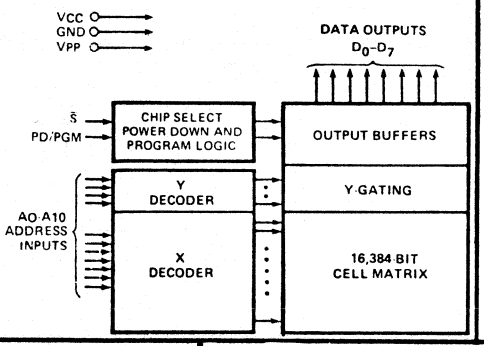

B441

B441 See PN 24ay

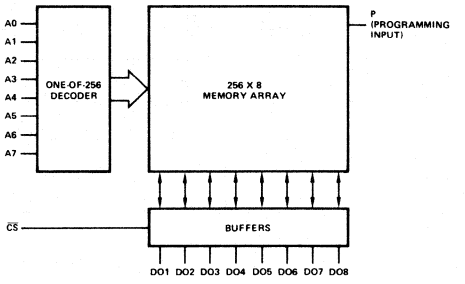

B434

B434 See PN 16hx

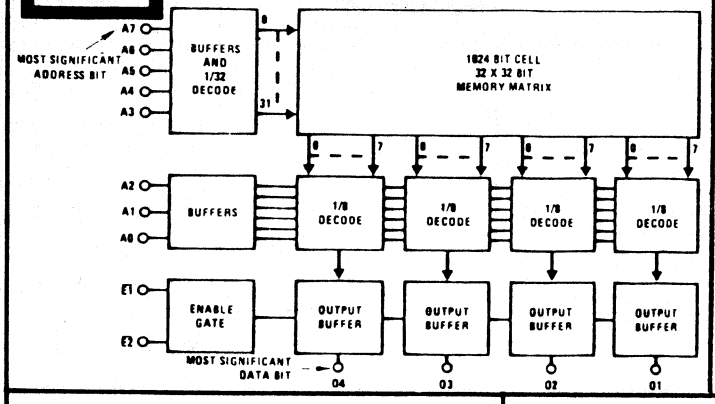

B435

B435 See PN 24es

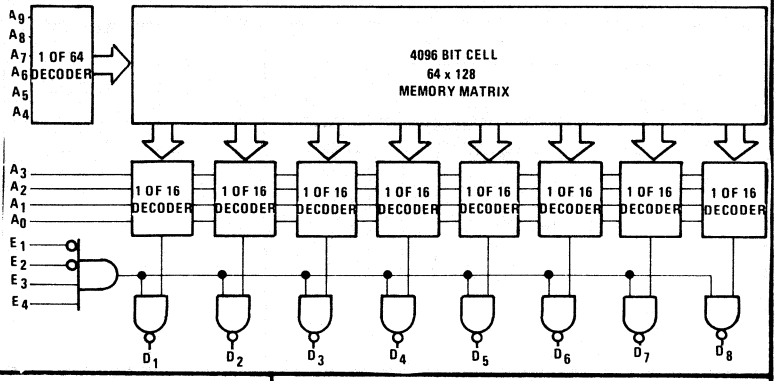

B436

B436 See PN 18br

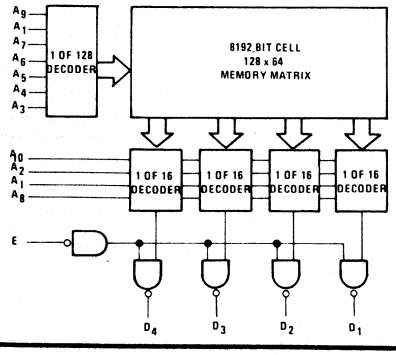

B442

B442 See PN 24gn

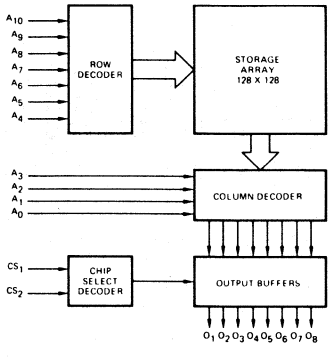

B443

B443 See PN 24gw

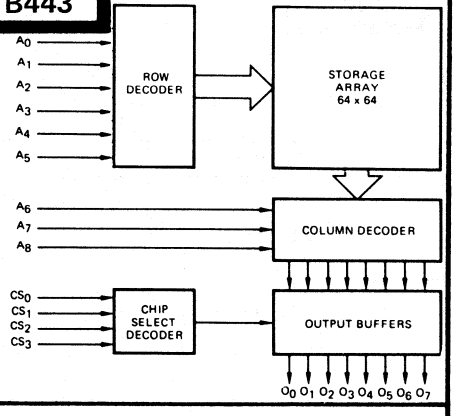

B438

B438 See PN 24hd

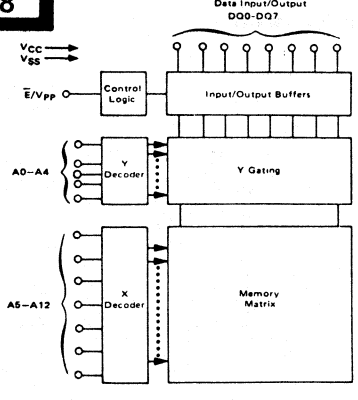

B439

B439 See PN 24he

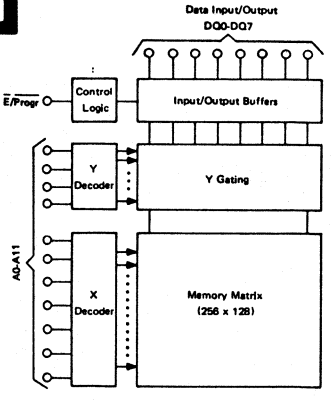

B445

B445 See PN 16gr

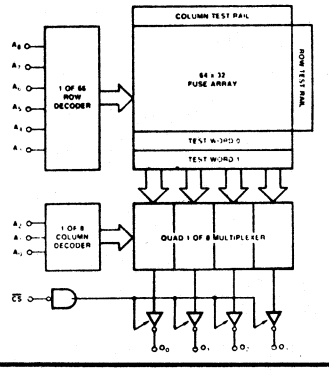

22. LOGIC/BLOCK DRAWINGS

IN DRAWING NUMBER SEQUENCE

B446

B446 See PN 16st

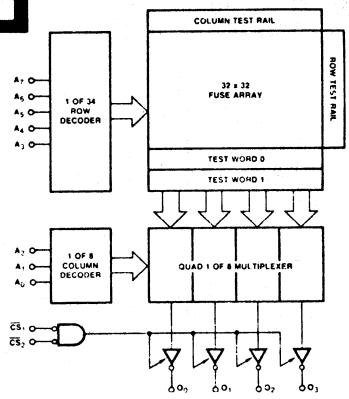

B447

B447 See PN 24gy

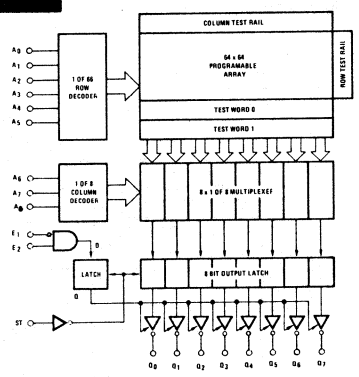

B448

B448 SEE PN 12bg
B448a SEE PN 24in

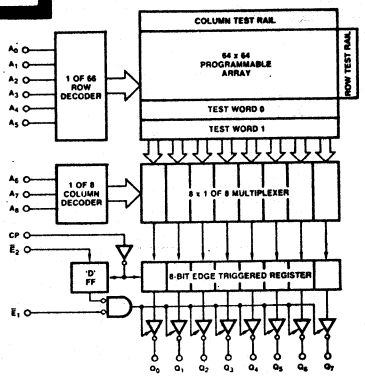

B449

B449 See PN 16gs

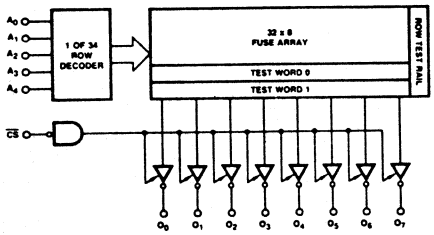

B450

B450 See PN 24es

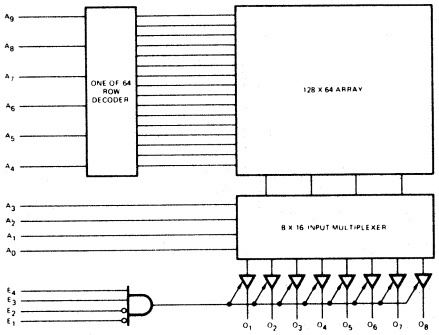

B451

B451 See PN 18bj

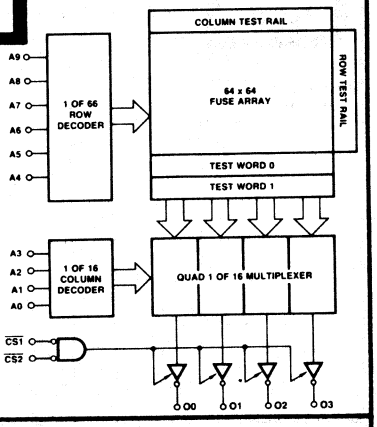

B452

B452 See PN 24hg

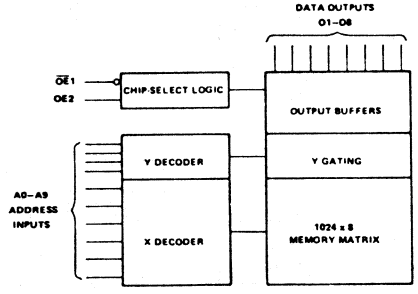

B453

B456 See PN 24hh

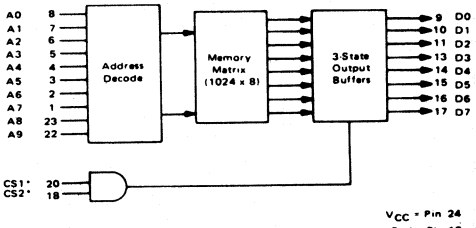

B456

B456 see PN 24hh

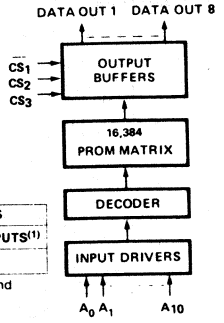

A_0-A_{10}	ADDRESS INPUTS
$\overline{CS}_1$, CS_2, CS_3	CHIP SELECT INPUTS(1)
O_1-O_8	DATA OUTPUTS

(1) To select the PROM $\overline{CS}_1 = V_{IL}$ and $CS_2 = CS_3 = V_{IH}$

B459

B459 See PN 24hq

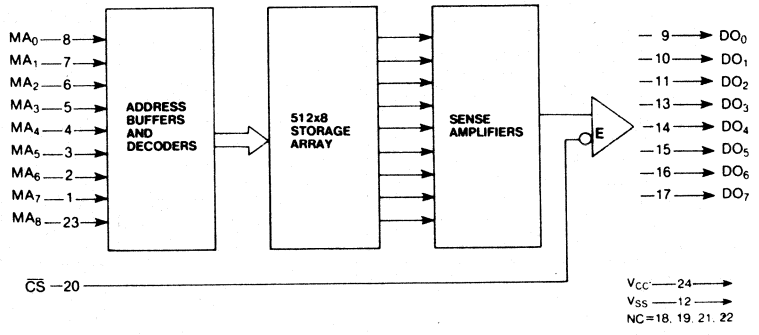

B457

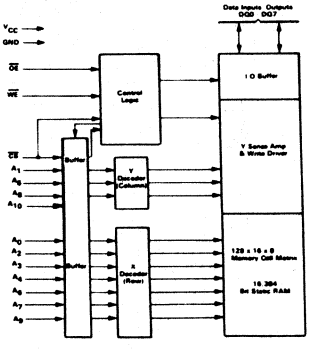

22. LOGIC/BLOCK DRAWINGS

IN DRAWING NUMBER SEQUENCE

B460

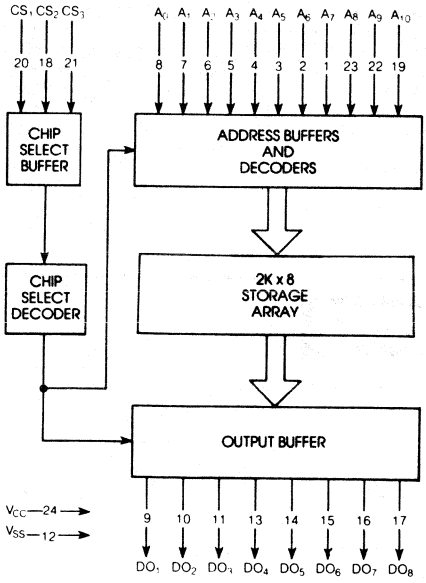

B460 See PN 24hr

B463

B463 See PN 18bp

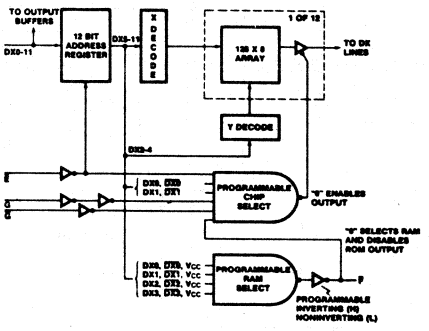

B464

B464 See PN 24hw, hx

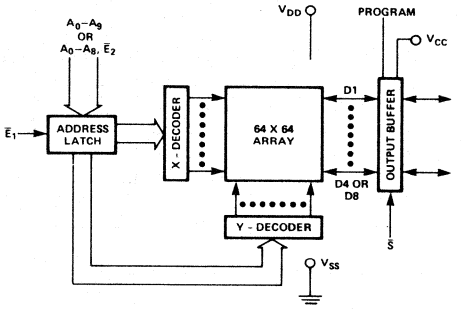

B465

B465 see PN24ny

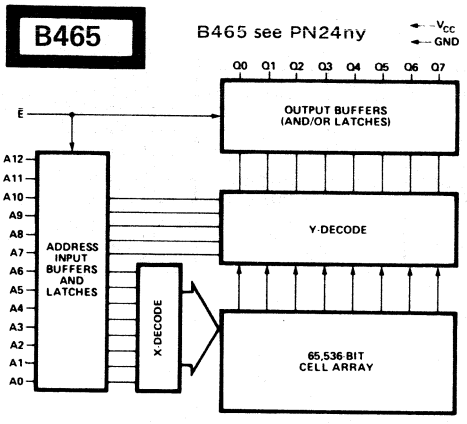

B466

B466 see PN 24hg

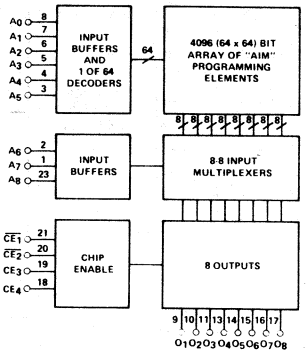

B467

B467 see PN40k
B467a See PN 40l
B467b See PN 40m

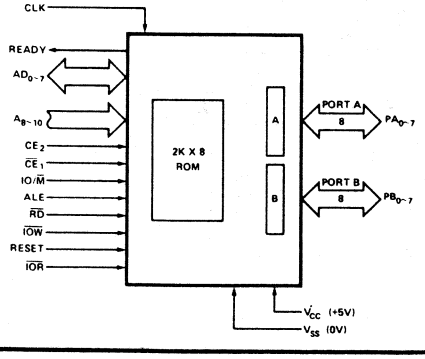

B468

*B468a ONLY SEE PN 28ah

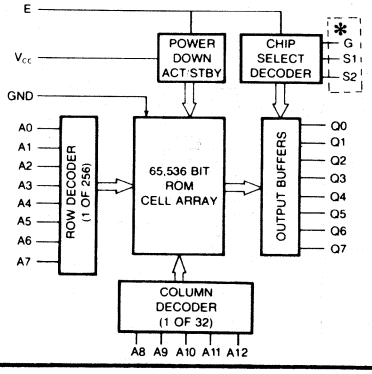

B469

SEE PN 24IC

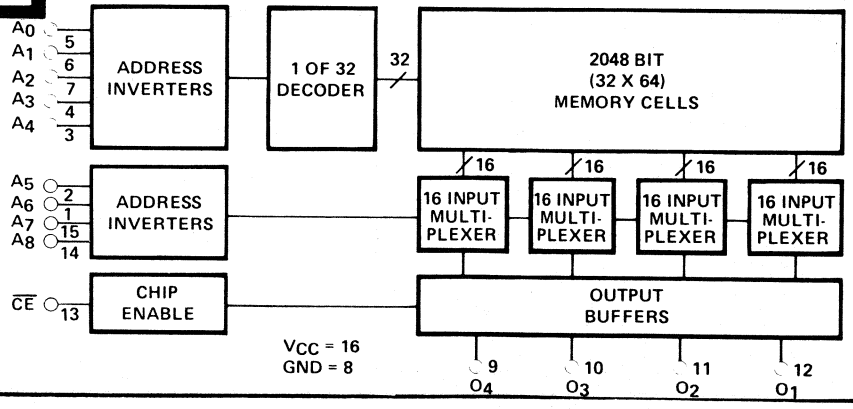

22. LOGIC/BLOCK DRAWINGS

IN DRAWING NUMBER SEQUENCE

B470

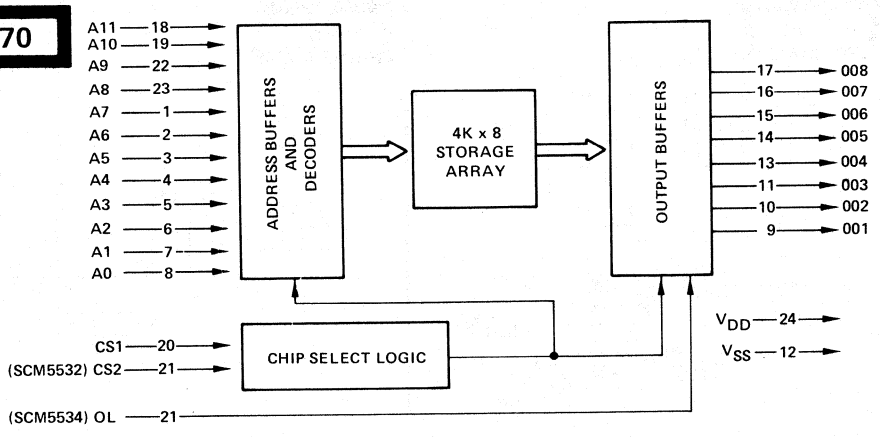

B471

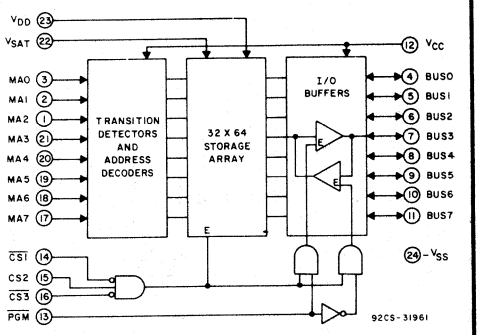

B472

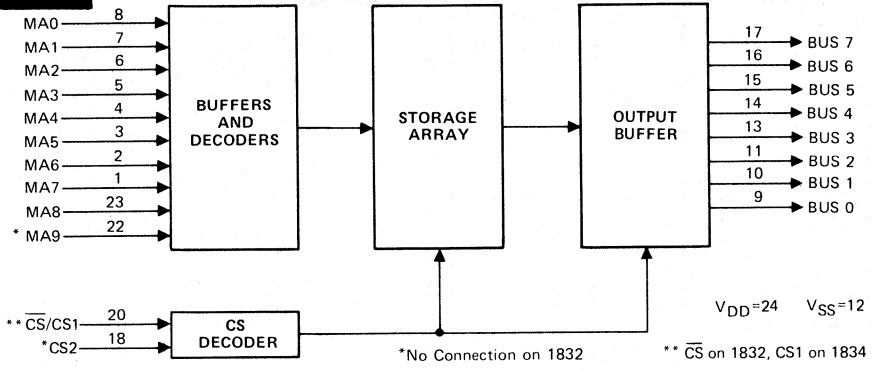

B473

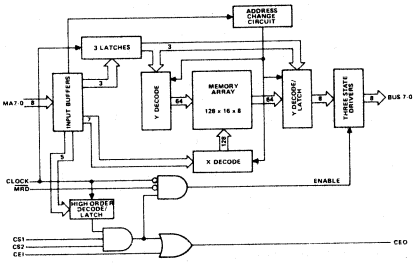

B474

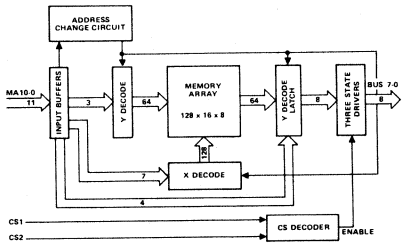

B475

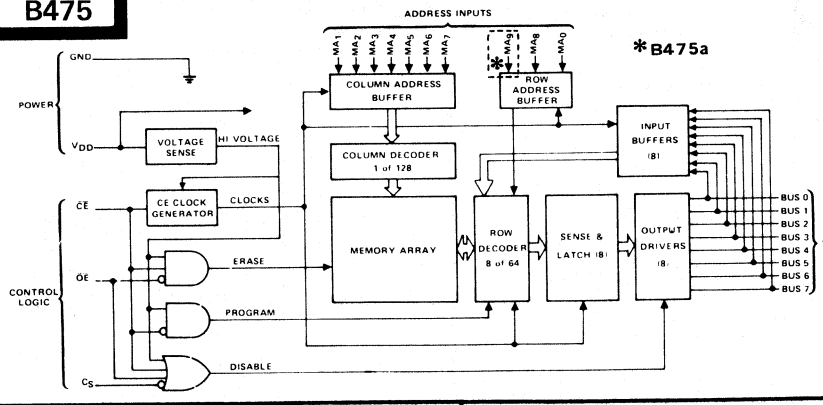

B476

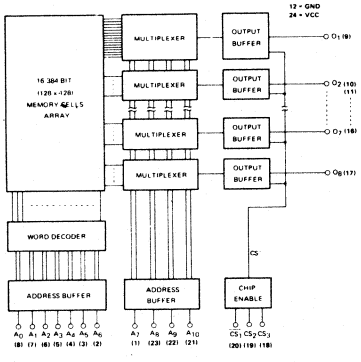

B477

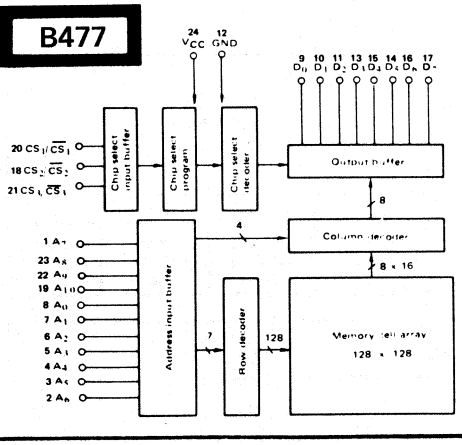

B478

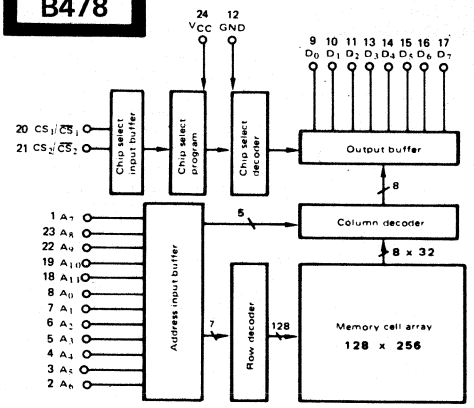

B479

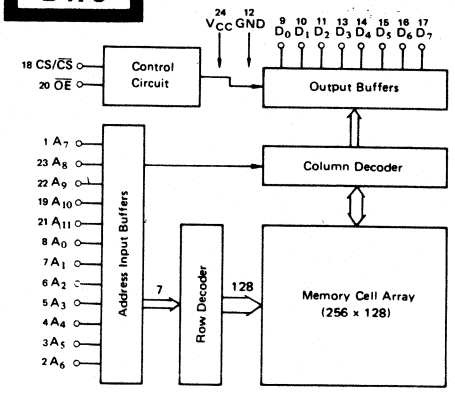

B480

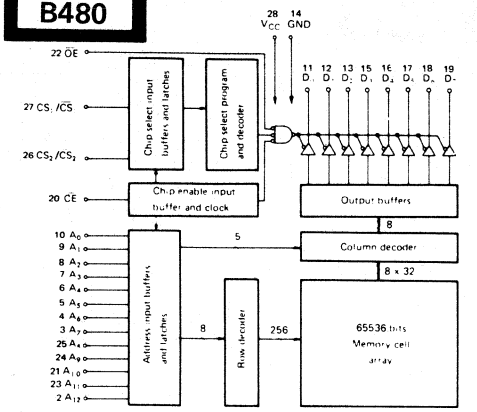

B481

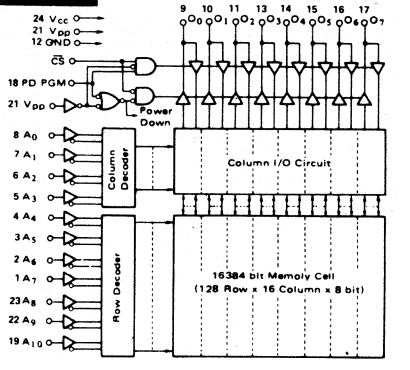

B482

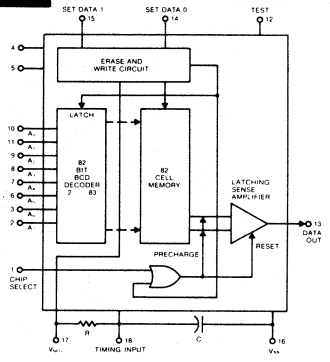

B483

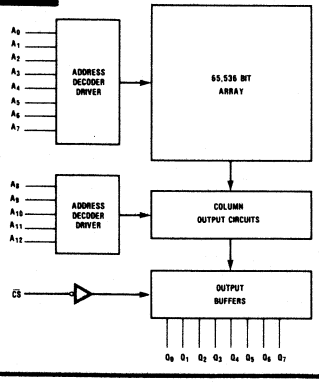

B484

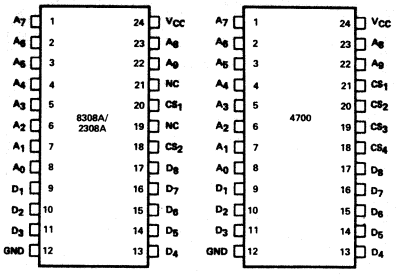

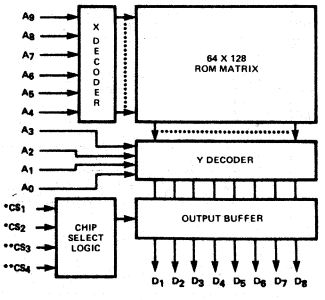

NOTES:
*CS_1 and CS_2 mask option on EA 4700/8308A/2308A (logic 1 or 0).
**CS_3 and CS_4 mask option on EA 4700 only (logic 1 or 0).

B485

B469 SEE PIN 24ic

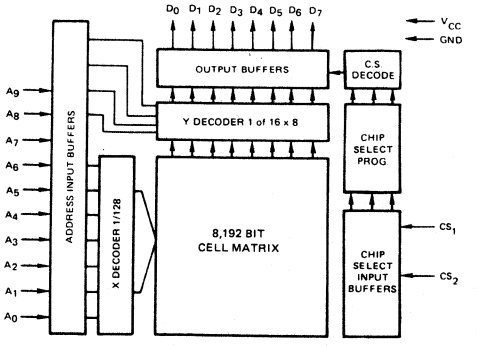

B486

SEE PN 24ie

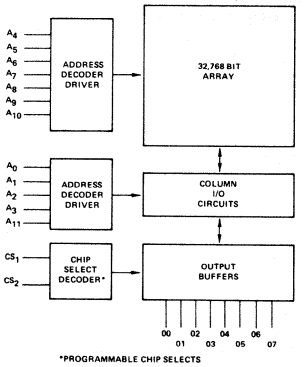

*PROGRAMMABLE CHIP SELECTS

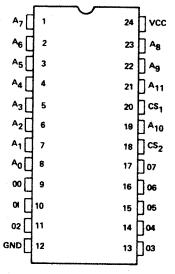

B487

SEE PN 24if

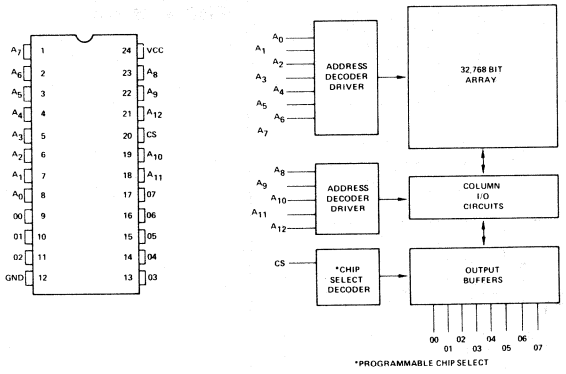

B488

B472 SEE PIN 24ij

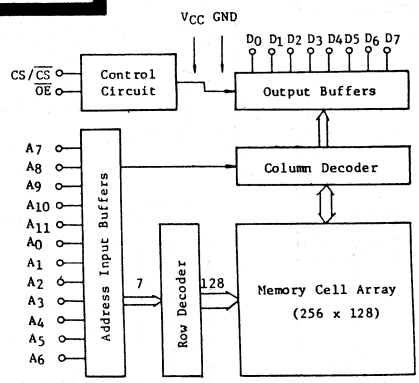

B489

B473 SEE PIN 28ad

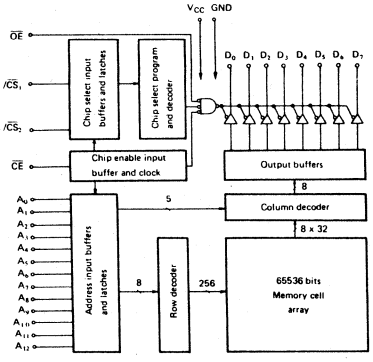

B490

SEE PN 24p

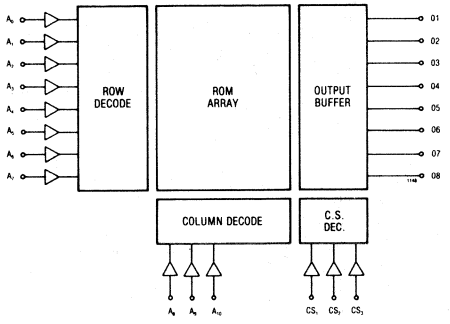

B491

SEE PN 24ip

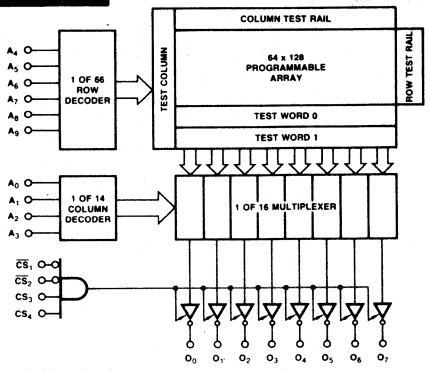

B492

*B492a only

SEE PN 20ac
SEE PN 24io

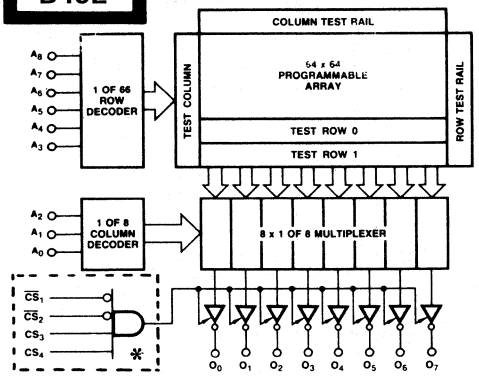

C7

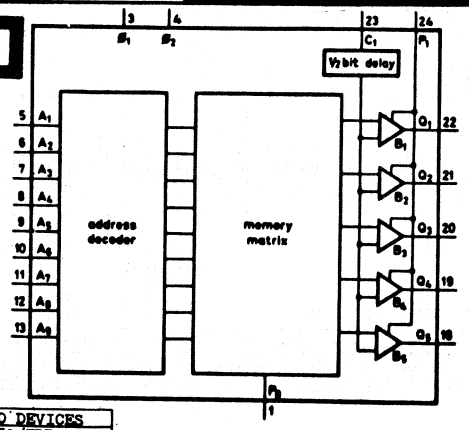

PAIRED DEVICES
C7 FDR116Z1/FDR116Z2

C9

CHARACTER ADDRESS (ASC11 CODE)

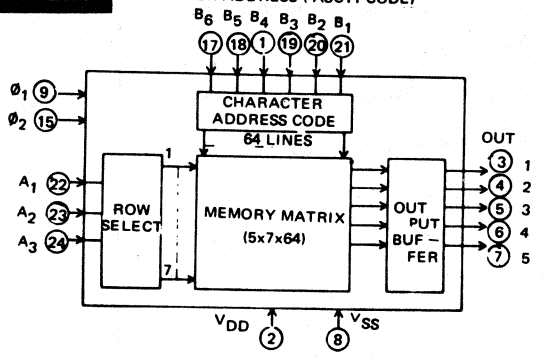

C14a

see PN24fl

C8

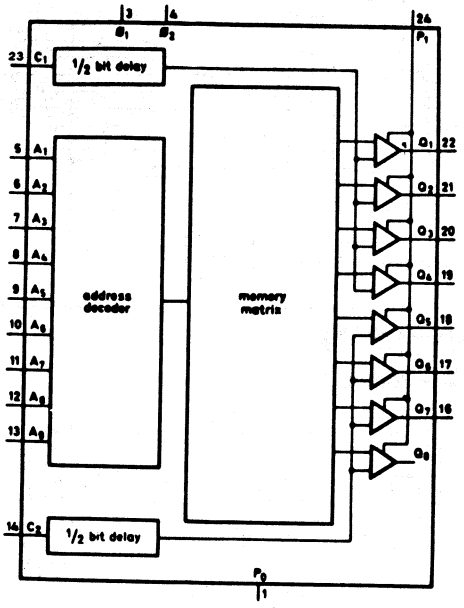

C15

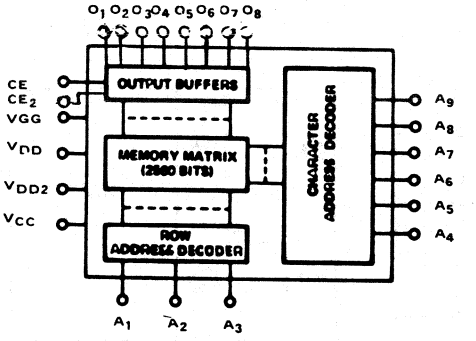

	ADDRESS									OUT												
	1	2	3	4	5	6	7	8	9	1	2	3	4	5	6	7	8	CE	VDD	VDD2	VCC	VGG
C15	14	15	16	17	18	19	20	21	22	4	5	6	7	8				11	12		24	1
C15a	14	15	16	17	18	19	20	21	22	4	5	6	7	8				10	12	11	24	1
C15b	14	15	16	17	18	19	20	21	22	10	9	8	7	6	5	4	3	1	12	11	24	23

C17

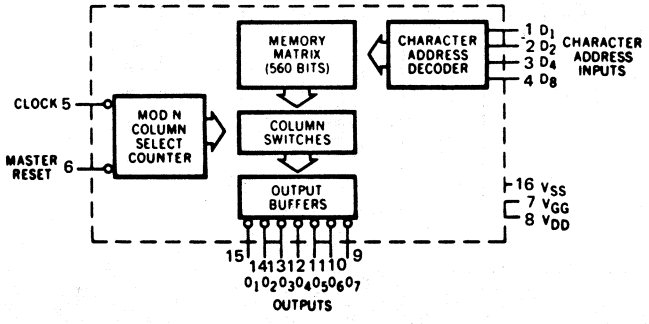

C18

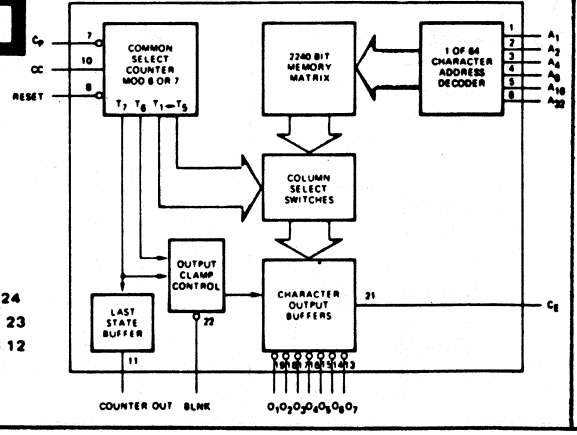

VSS = Pin 24
VGG = Pin 23
VDD = Pin 12

C19

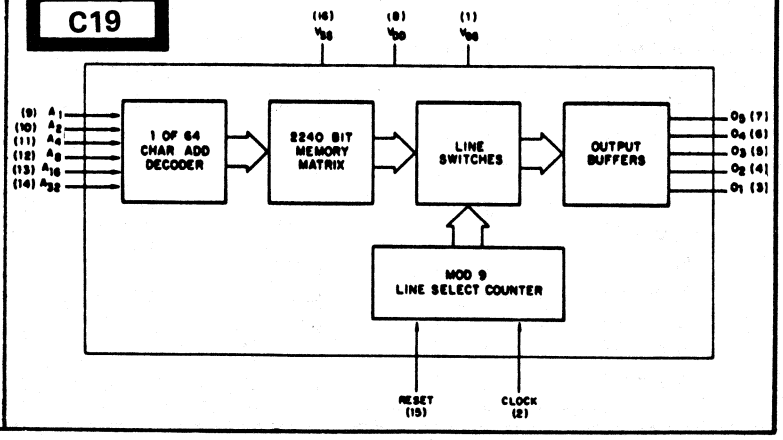

C26

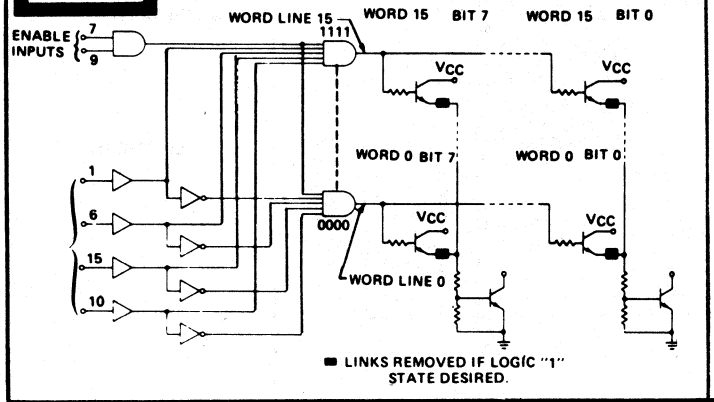

■ LINKS REMOVED IF LOGIC "1" STATE DESIRED.

C28

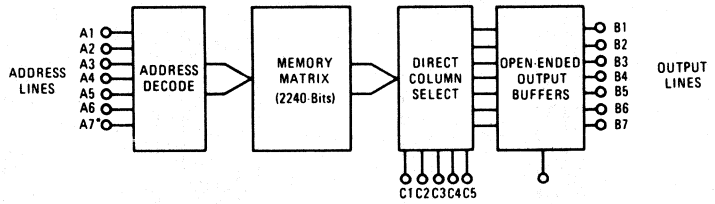

* AVAILABLE ON C28 ONLY.

	A							B							C							
	1	2	3	4	5	6	7	1	2	3	4	5	6	7	1	2	3	4	5	CE	VSS	VGG	VDD
C28	23	22	21	20	19	13	24	4	5	6	7	8	9	10	14	15	16	17	18	3	1	2	12
C28a	27	26	25	24	23	16		1	3	5	7	9	11	13	18	19	20	21	22	28	17	15	14
C28b	27	26	25	24	23	16	18	1	3	5	7	9	11	13	18	19	20	21	22		17	15	14

C41

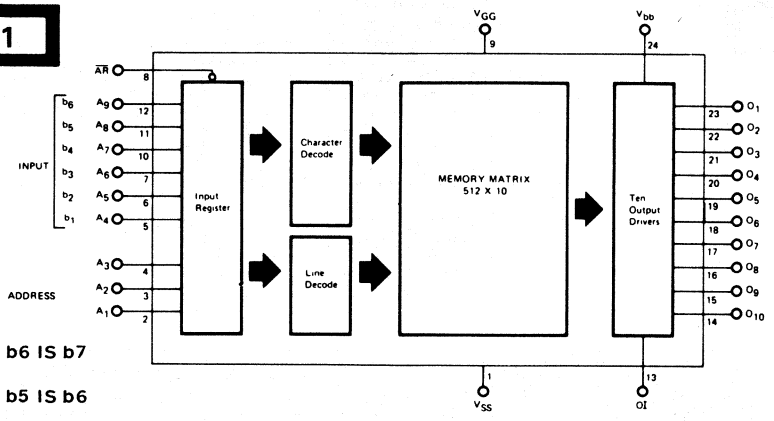

C41a — b6 IS b7

b5 IS b6

C42

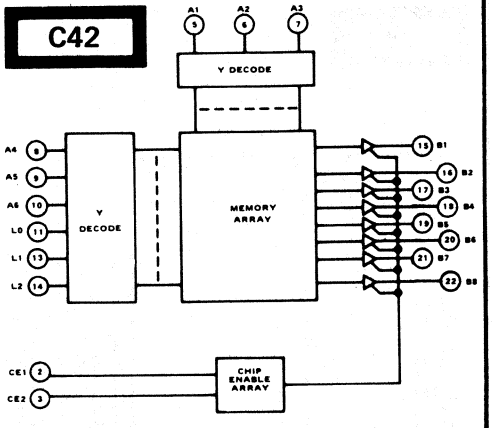

C50

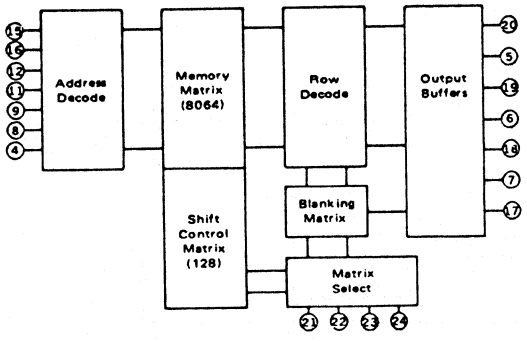

	PIN NUMBERS																						
	1	2	3	4	5	6	7	8	9	10	11	12	13	14	15	16	17	18	19	20	21	22	23	24
C50	VBB	VDD	VGG	A7	B2	B4	B6	A6	A5	NC	A4	A3	VSS	NC	A1	A2	B7	B5	B3	B1	RS1	RS2	RS3	RS4
C50a	NC	VCC	NC	A7	B2	B4	B6	A6	A5	NC	A4	A3	VSS	NC	A1	A2	B7	B5	B3	B1	RS1	RS2	RS3	RS4

C51

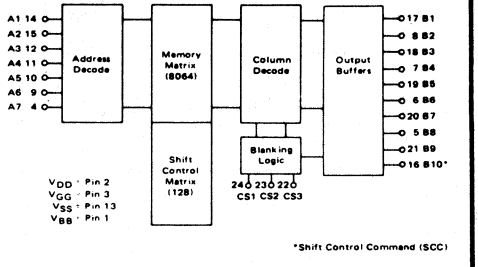

*Shift Control Command (SCC)

C52

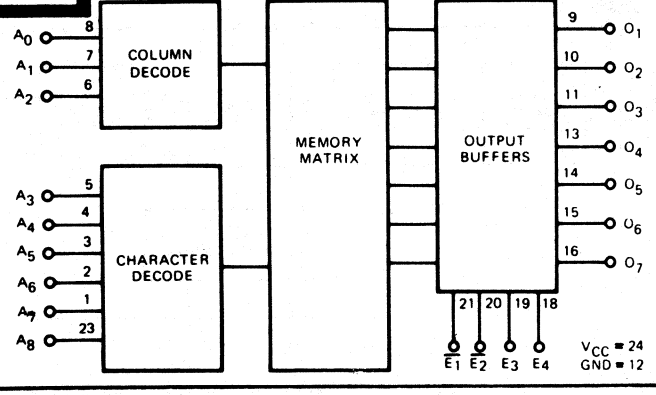

C53

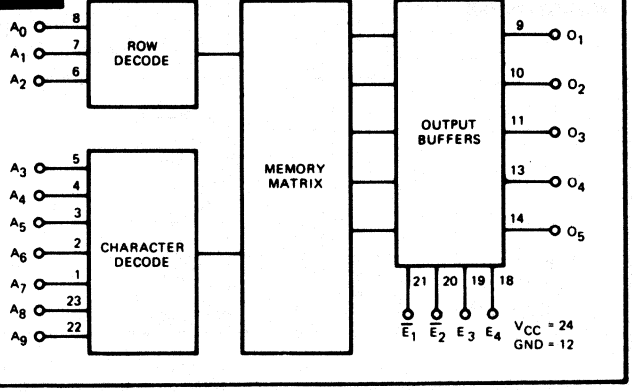

22. LOGIC/BLOCK DRAWINGS

IN DRAWING NUMBER SEQUENCE

C54

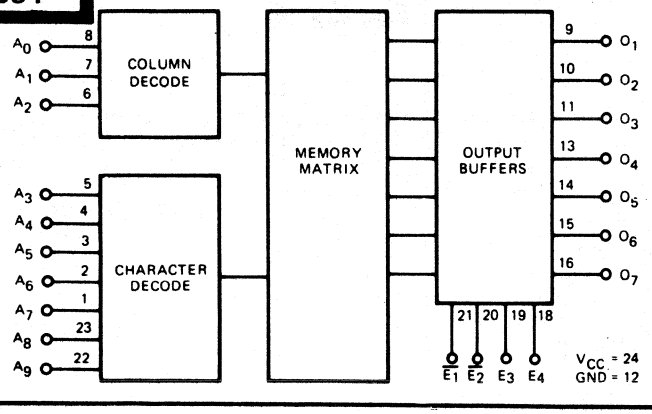

C55

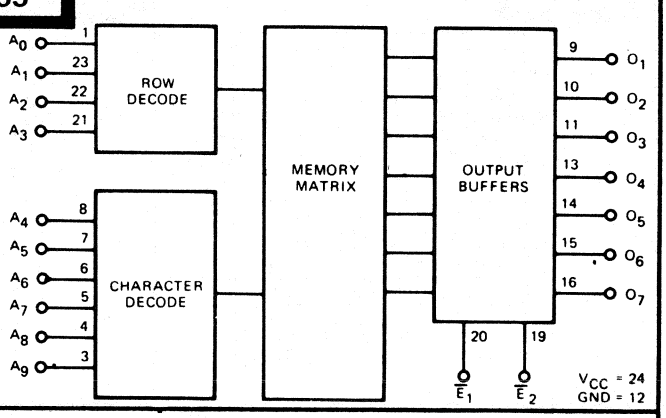

C56

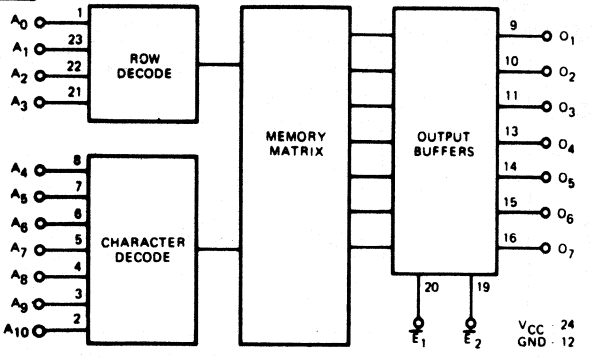

C57

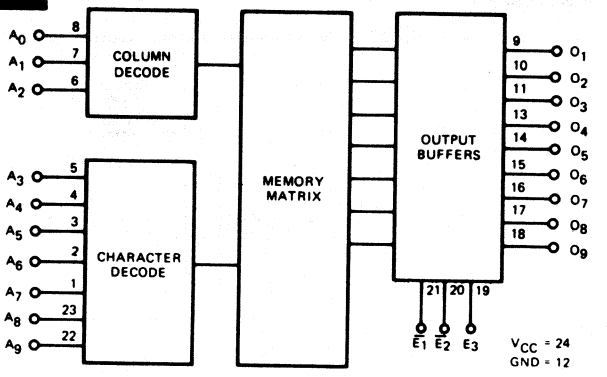

C58

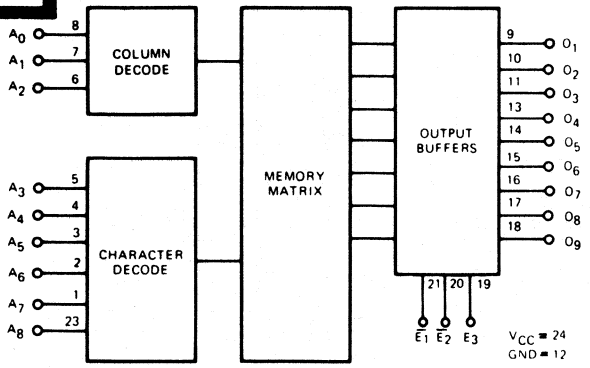

C59

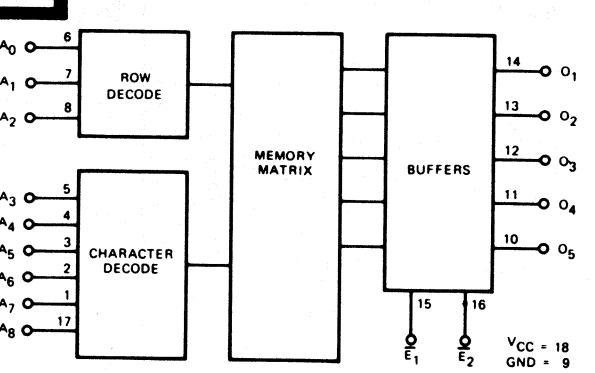

C60

C60 See PN 24fm
C60a See PN 24fn

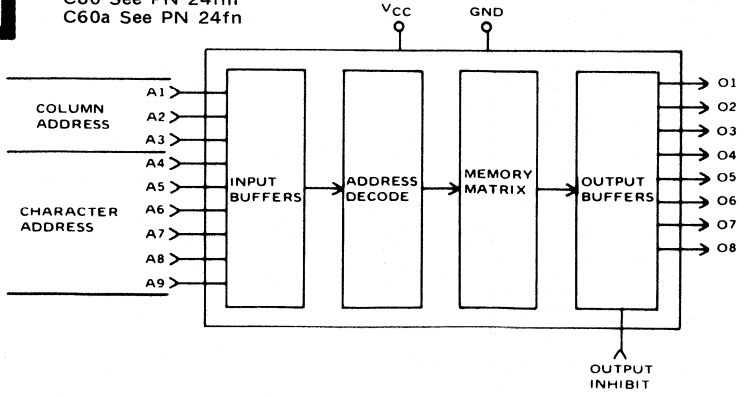

C61

C61 See PN 24bk

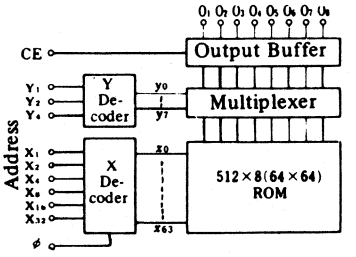

C62

C62 See PN 28t

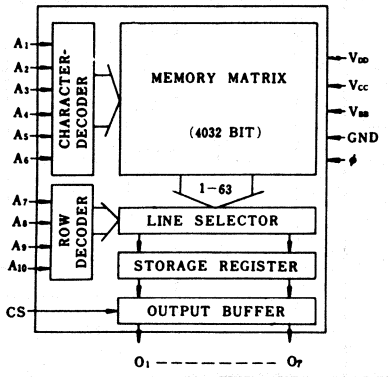

C63

C63 See PN 28u

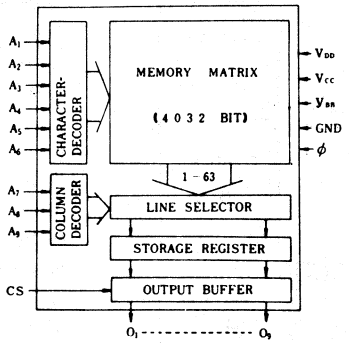

C64

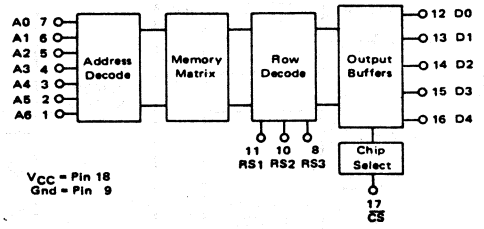

C65

C65 See PN 24fo

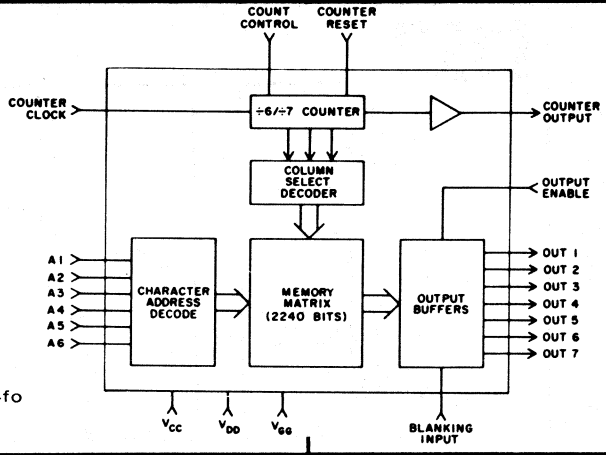

C66

C66 See PN 24fb

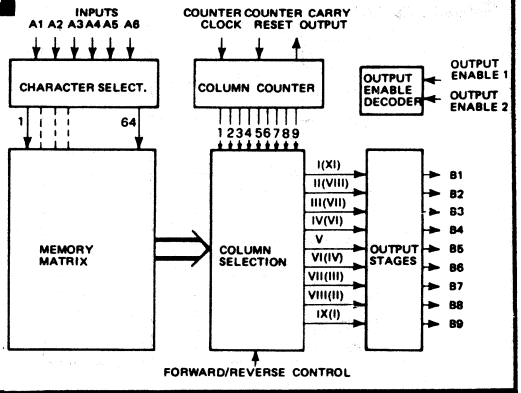

C67

C67 See PN 24fq

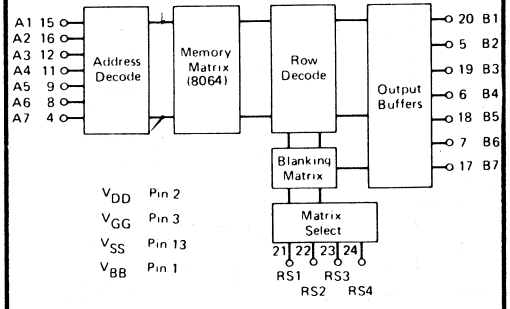

C71

C71 See PN 28k

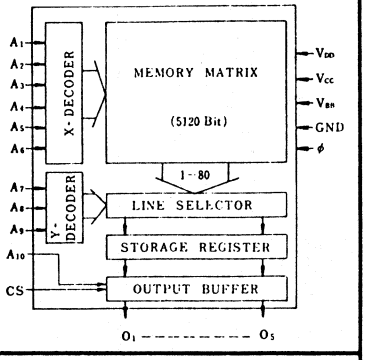

C75

C75 See PN 16cv

C75a

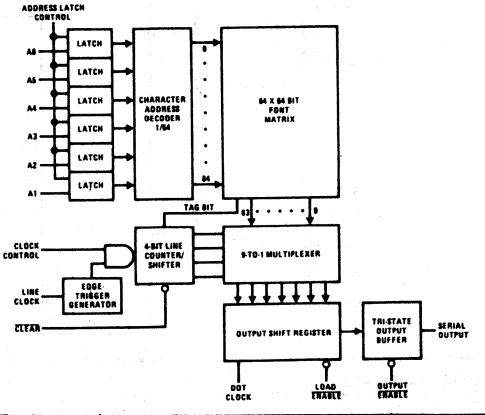

C72

C72 See PN 24fs

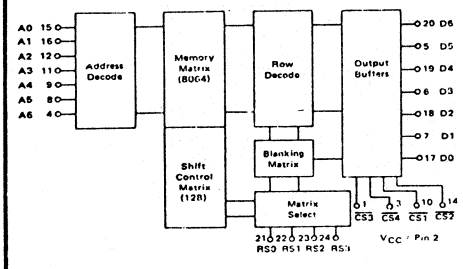

C76

C76 See PN 24ft

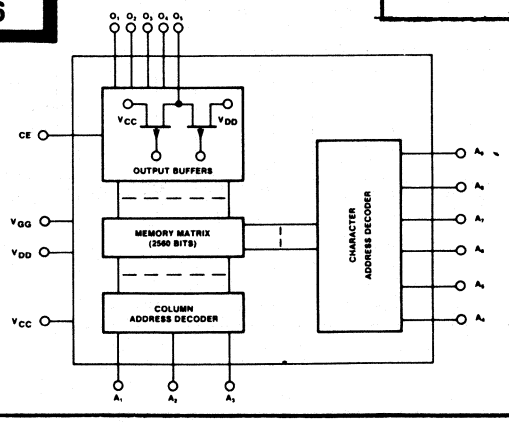

22. LOGIC/BLOCK DRAWINGS

IN DRAWING NUMBER SEQUENCE

C77

C77 See PN 24fu

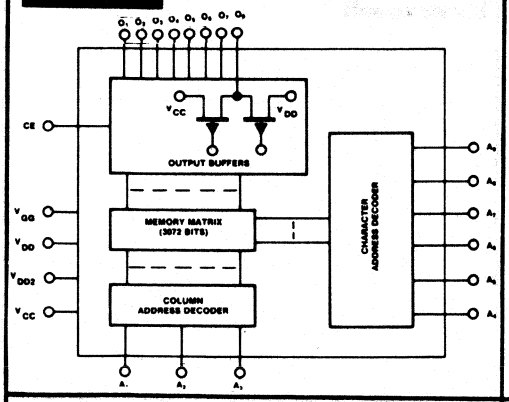

C78

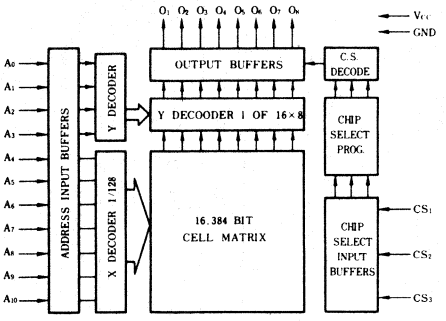

C79

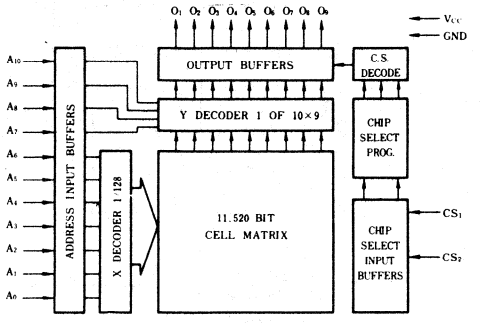

C80

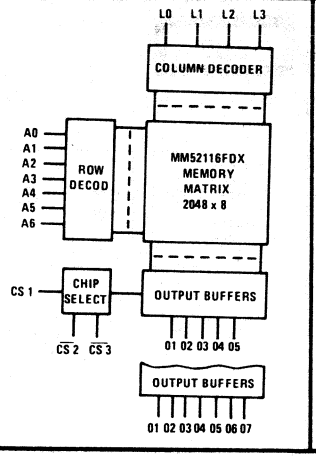

C80 See PN 24ib
C80 See PN 24ic

C81

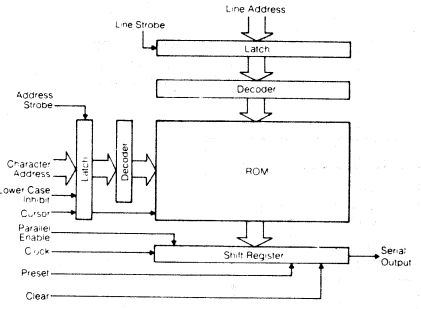

C82

SEE PN 48a

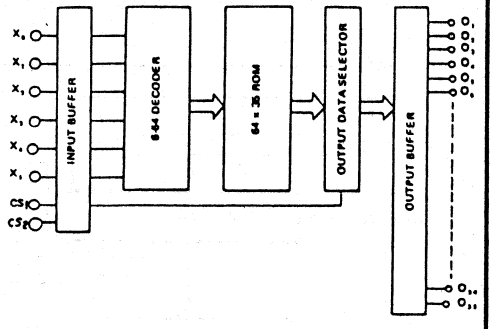

C83

SEE PIN 48b

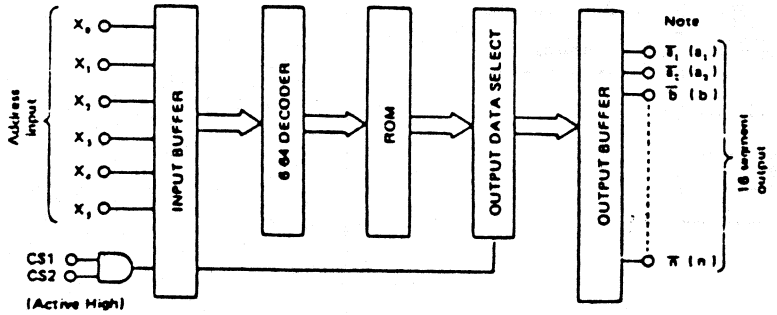

C84

SEE PIN 24ib

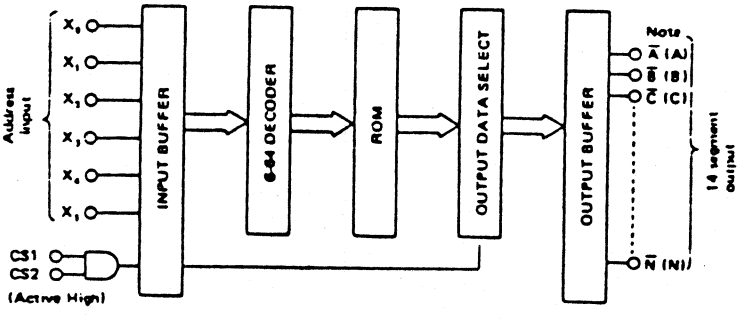

22. LOGIC/BLOCK DRAWINGS

IN DRAWING NUMBER SEQUENCE

C85

SEE PIN 28ac

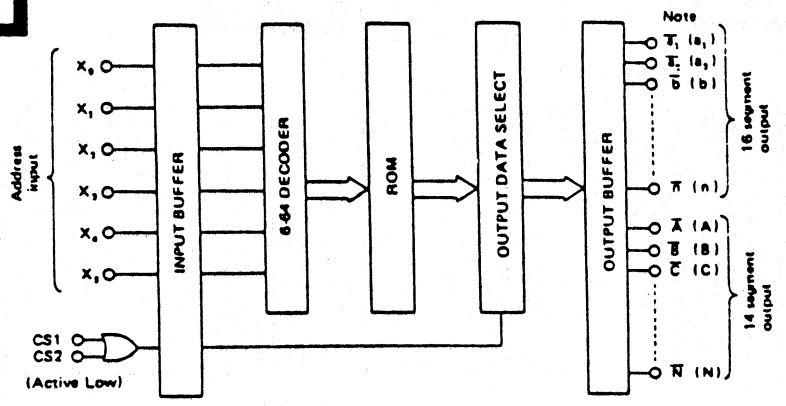

C86

See PN 28ag

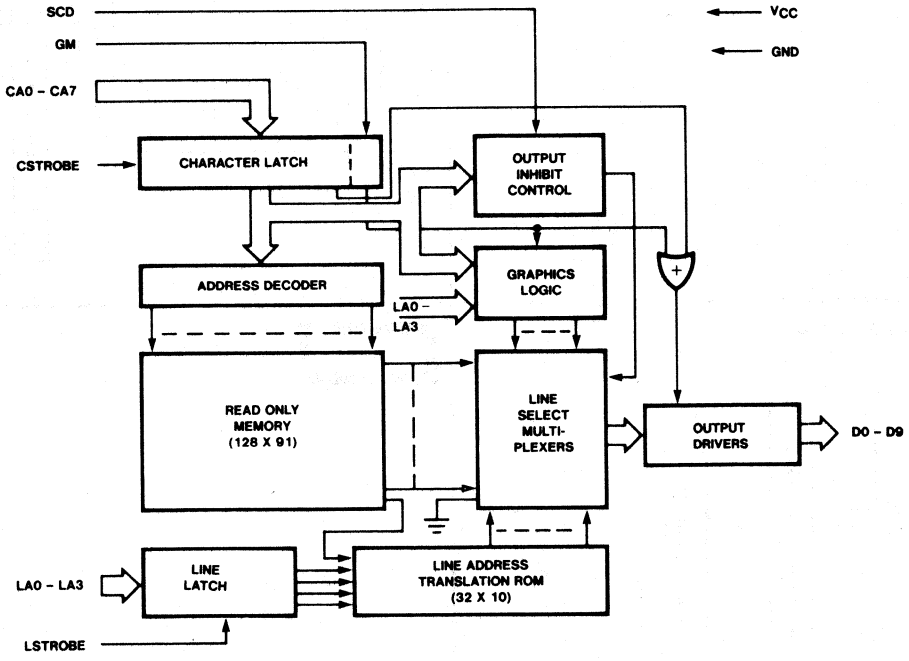

C87

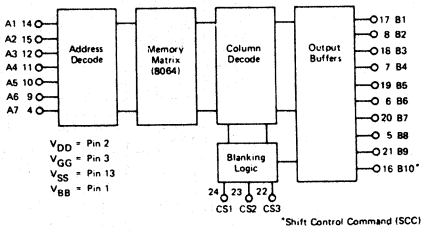

C88

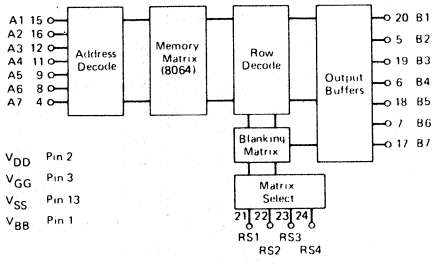

E1

E1 See PN 24bi
E1a See PN 24bh

E13

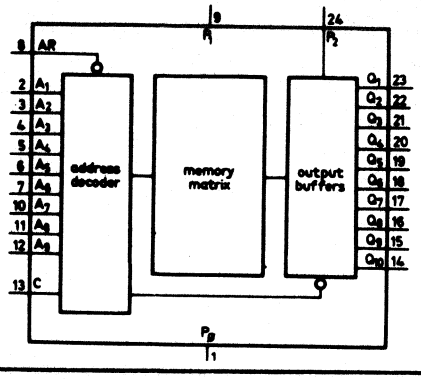

E17

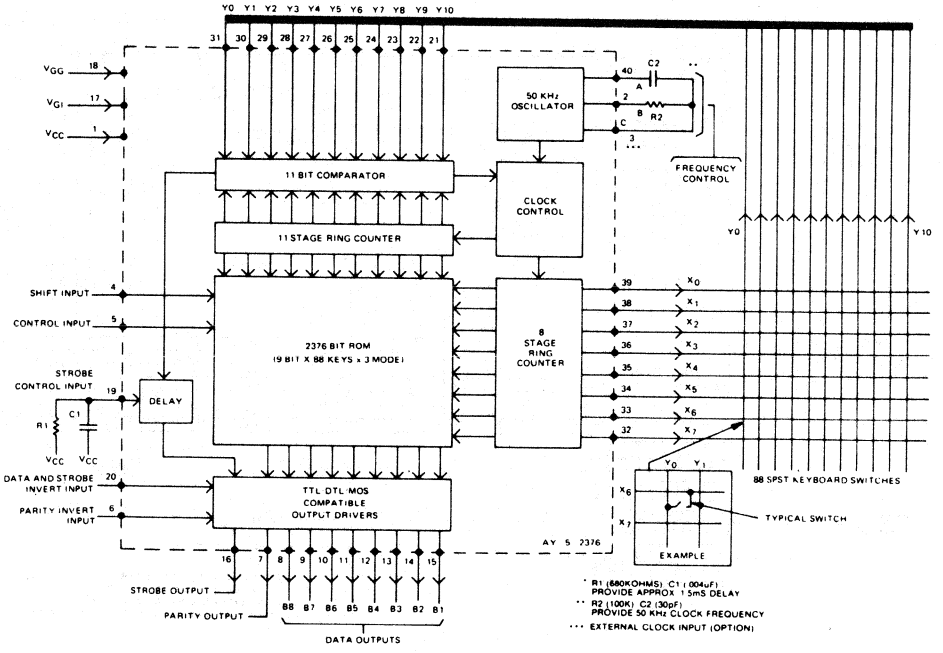

E17a SEE PN 40c

E25

`E25 See PN 40g

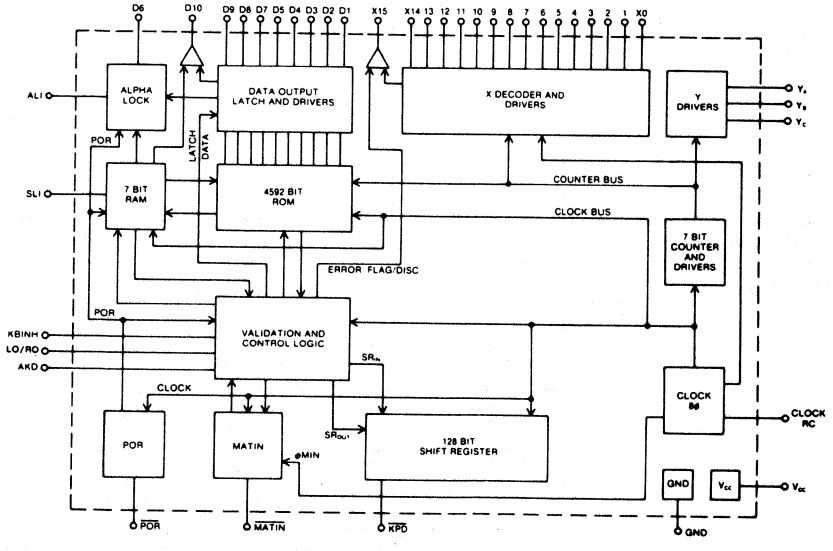

E26

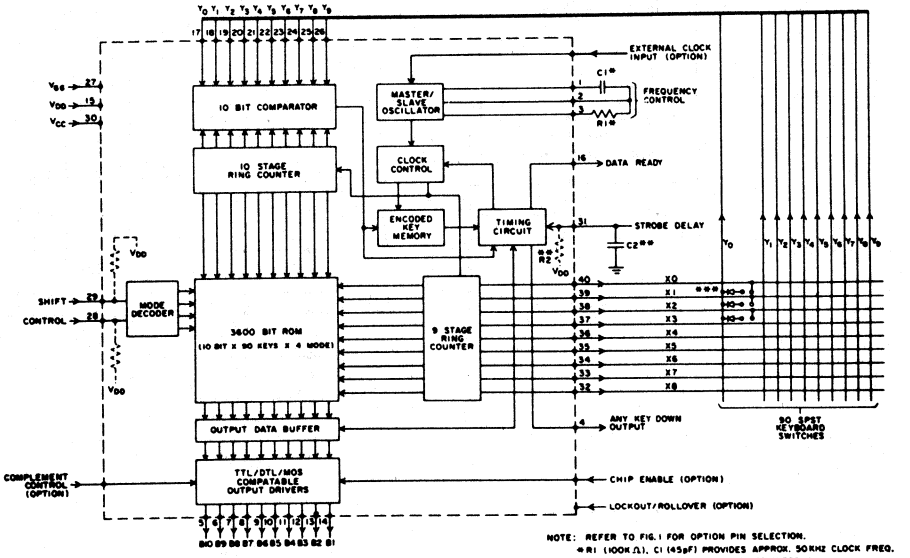

NOTE: REFER TO FIG. 1 FOR OPTION PIN SELECTION.
*R1 (100K Ω), C1 (45pF) PROVIDES APPROX. 50KHz CLOCK FREQ.
**C2 (300nS DELAY/ CPF) R2 SUPPLIED INTERNALLY.
***DIODES NECESSARY FOR COMPLETE n-KEY ROLLOVER OPERATION.

F1

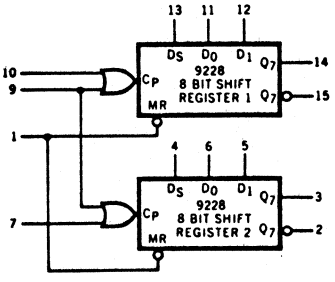

V_{CC} = Pin 16
Gnd = Pin 8

F2

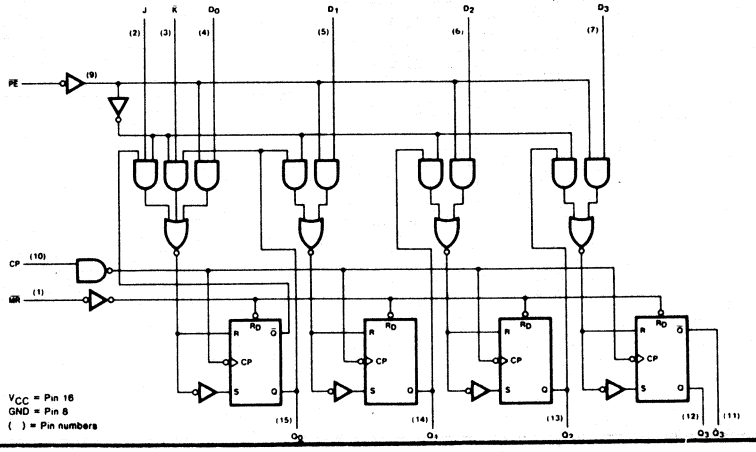

V_{CC} = Pin 16
GND = Pin 8
( ) = Pin numbers

F3

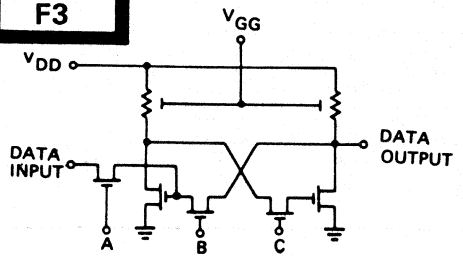

F19

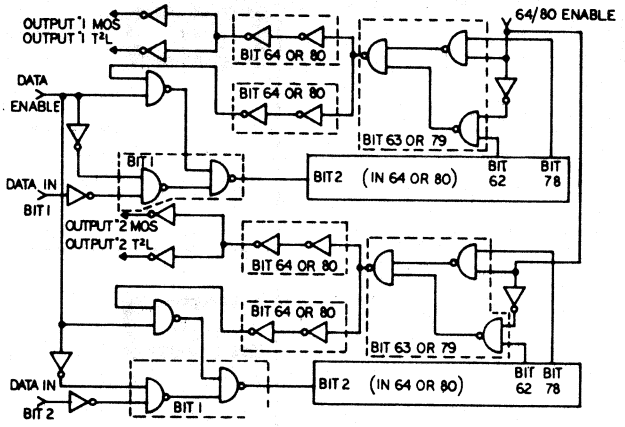

F29

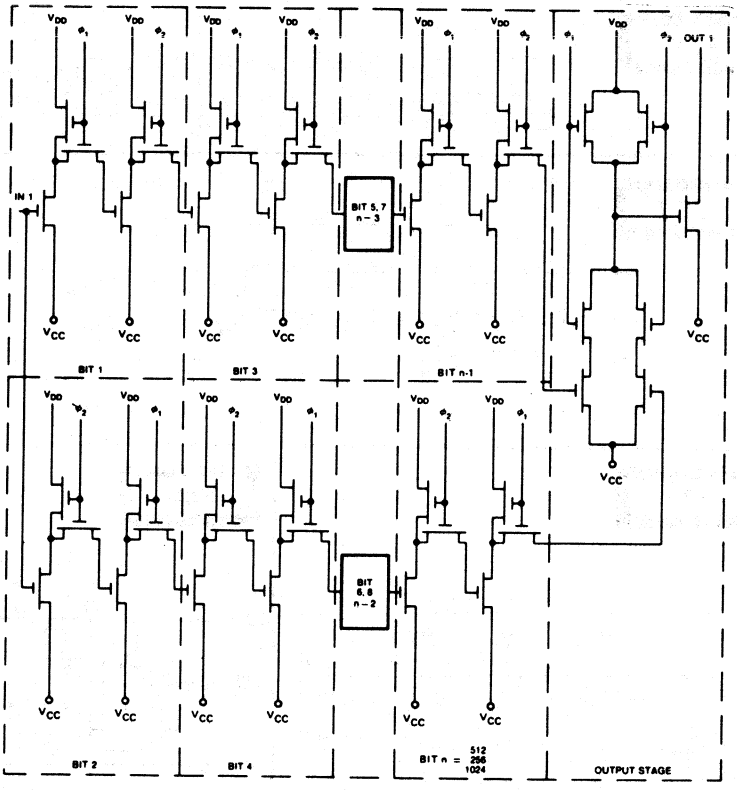

	NO. OF BITS	COMMENT
F29	256	3 MORE IDENTICAL REGISTERS
F29a	512	1 MORE IDENTICAL REGISTER
F29b	1024	ONLY REGISTER

F25

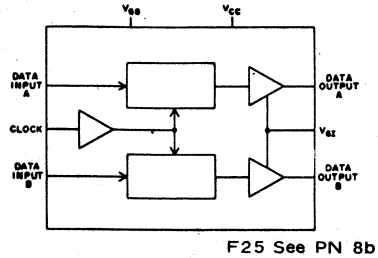

F25 See PN 8b
F25a See PN 14g
F25b See PN 14h
F25c See PN 14i
F25d See PN 8c
F25e See PN 14i
F25f See PN 14j

F30

	BITS
F30	512
F30a	1024

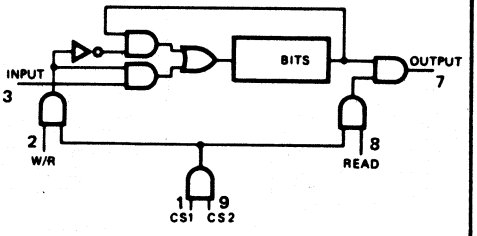

22. LOGIC/BLOCK DRAWINGS

IN DRAWING NUMBER SEQUENCE

F31

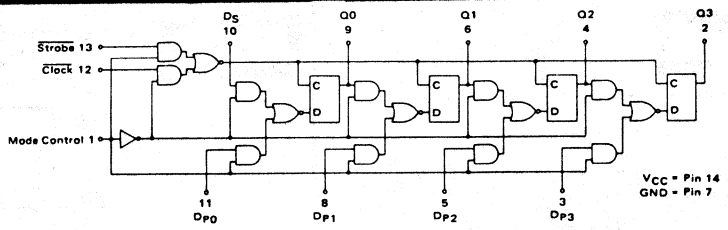

F35

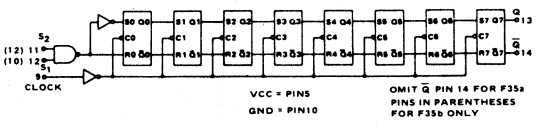

F36

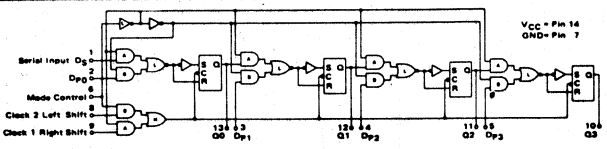

F37

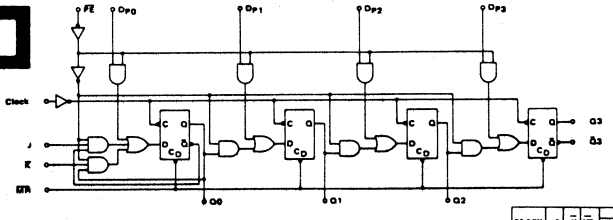

	CLOCK	J	K̄	MR	Q 0	Q 1	Q 2	Q 3	Q̄3	DP 0	DP 1	DP 2	DP 3	PE	VCC	GND
F37	10	2	3	1	15	14	13	12	11	4	5	6	7	9	16	8
F37a	1	11	12	9	13	15	3	7	6	10	14	2	5	4	16	8

F38

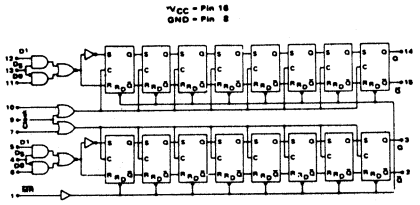

F39

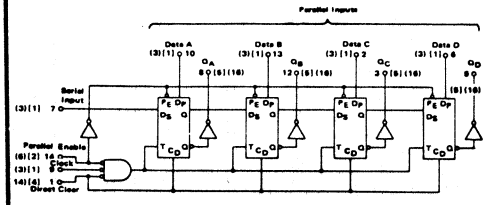

F40

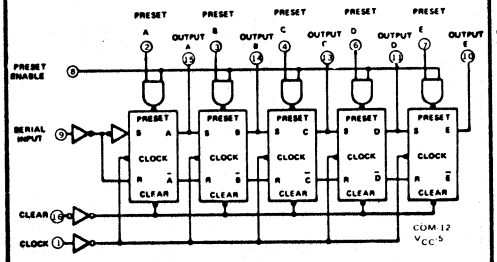

F48

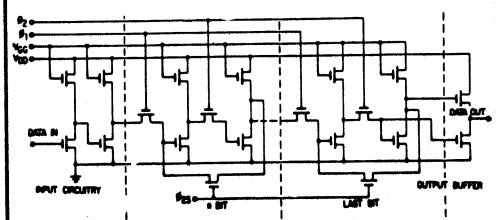

	CKT No.	Ø2	Ø1	VGG	VDD	DATA IN	DATA OUT	GND
F48	1	6	4	7	3	1	2	5
	2	6	4	7	3	9	8	5

F58

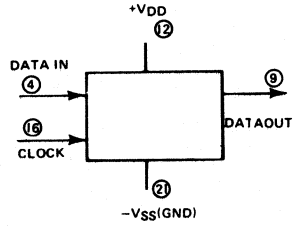

F59

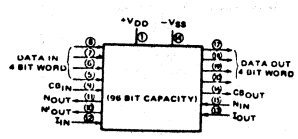

F70

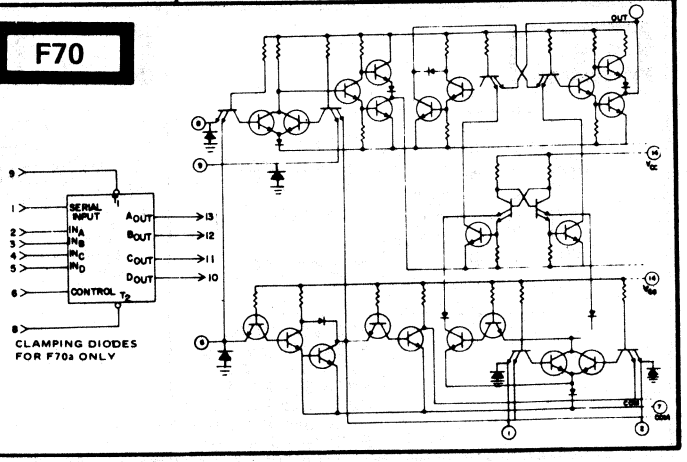

F73

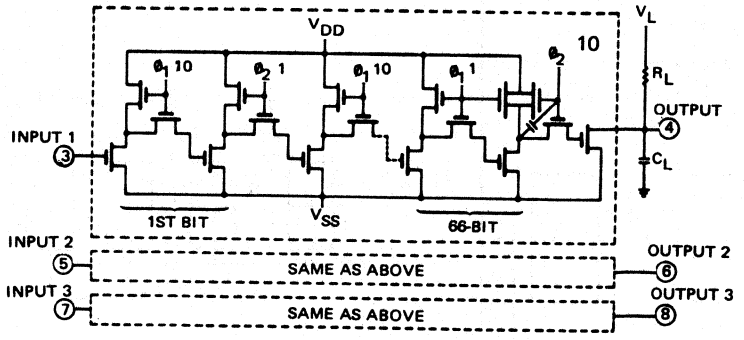

F74

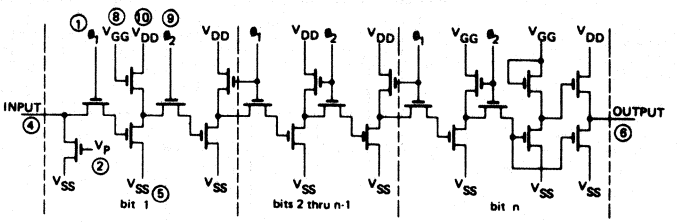

F75

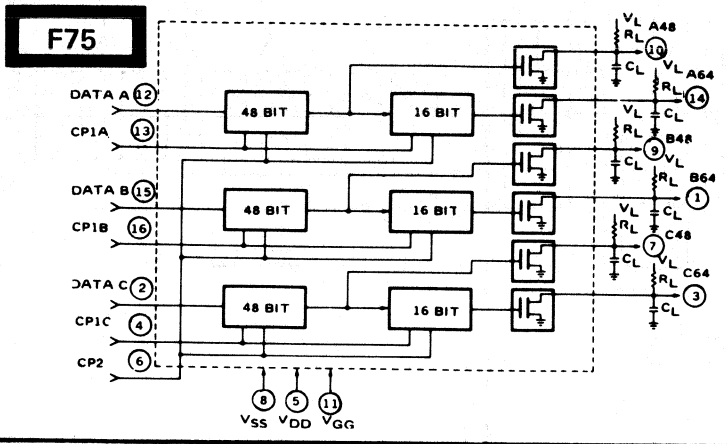

F76

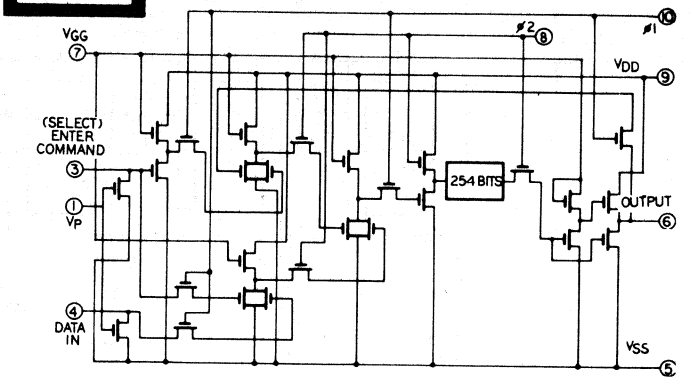

F77

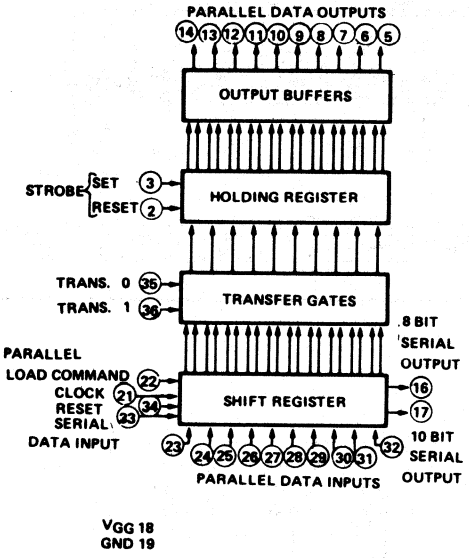

F78

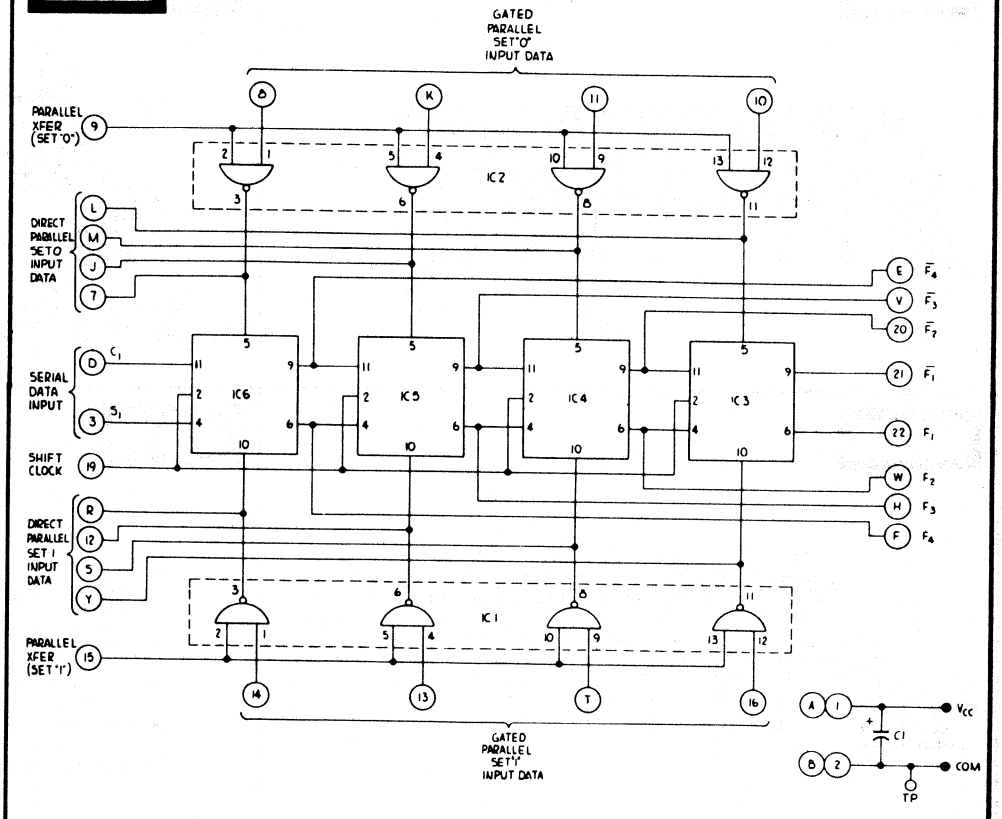

F79

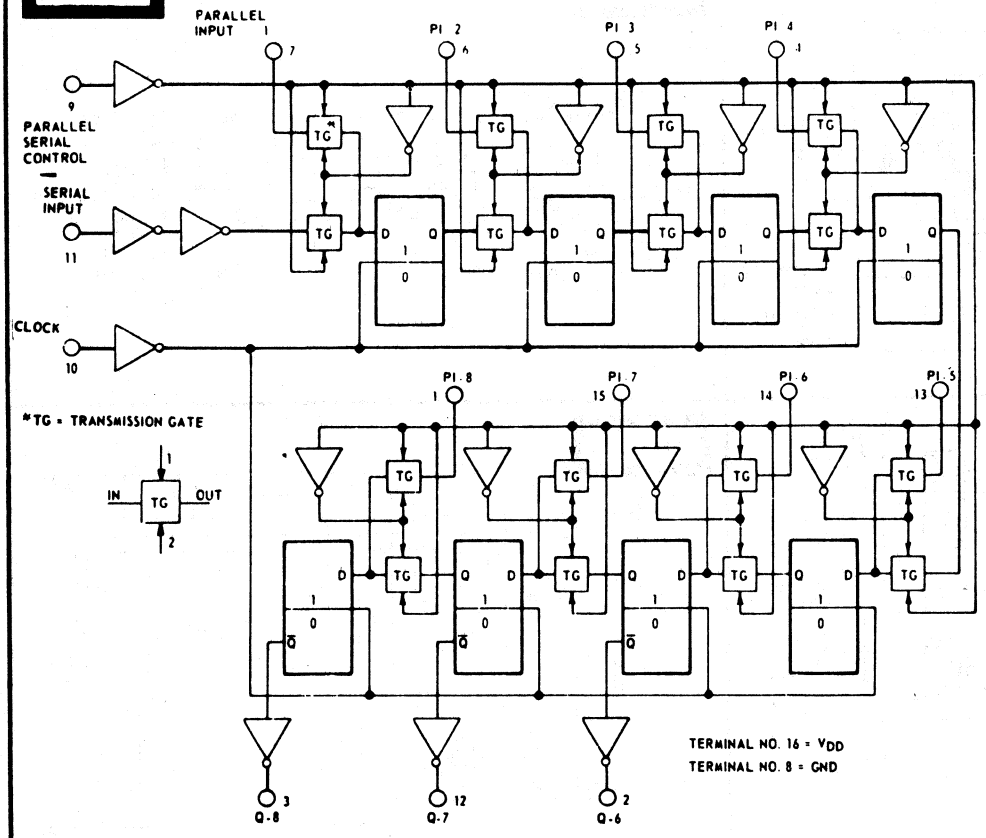

F80

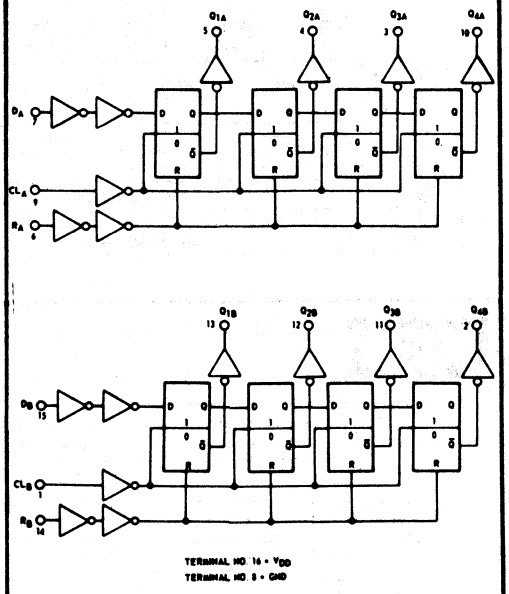

F88

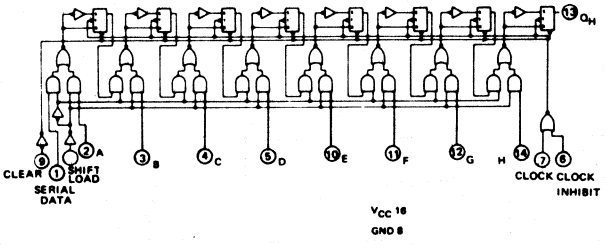

F89

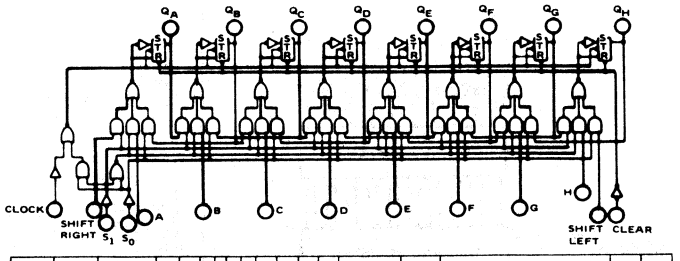

	NO. OF BITS	CLOCK	SHIFT R	S1	S0	A	B	C	D	E	F	G	H	SHIFT L	CLEAR	Q A	Q B	Q C	Q D	Q E	Q F	Q G	Q H	VCC	GND
F89	8	11	2	23	1	3	5	7	9	15	17	19	21	22	13	4	6	8	10	14	16	18	20	24	12
F89a	4	11	2	10	9	3	4	5	6					7	1	15	14	13	12					16	8

F90

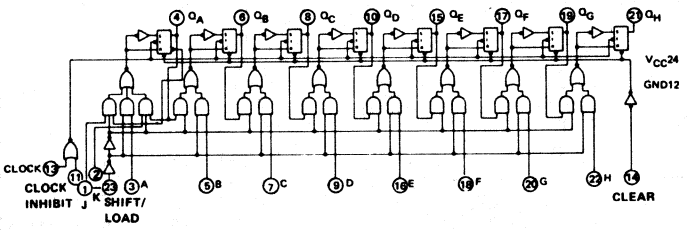

F91

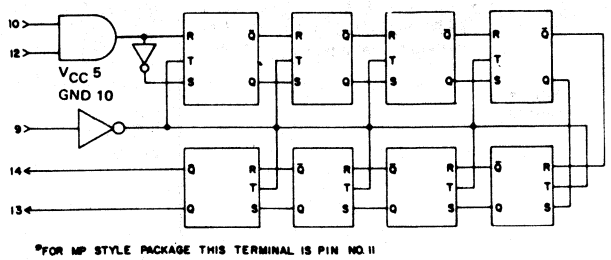

F92

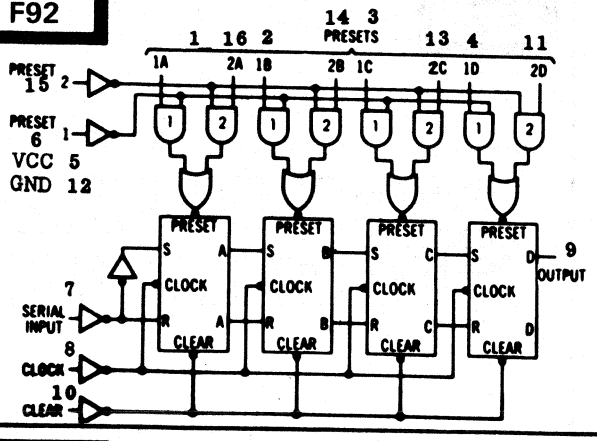

F94

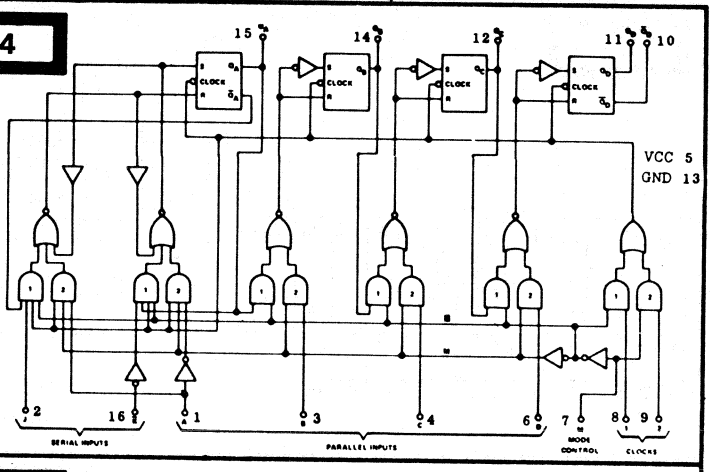

F106

	NC. OF CKTS	IN W/R	ESX	CSY	OUT	RL	VCC	GND	CLOCK
F106	1	3 4	5	6	1	2	16	8	11
	2	15 12	5	6	14	13			

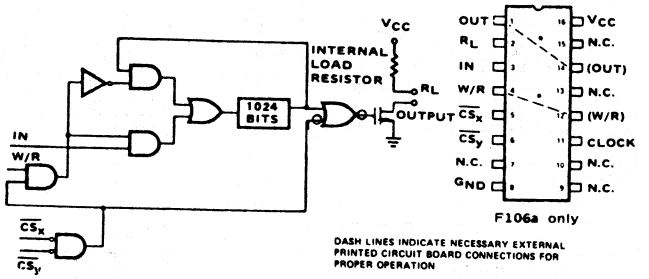

F106a only

DASH LINES INDICATE NECESSARY EXTERNAL PRINTED CIRCUIT BOARD CONNECTIONS FOR PROPER OPERATION

F107

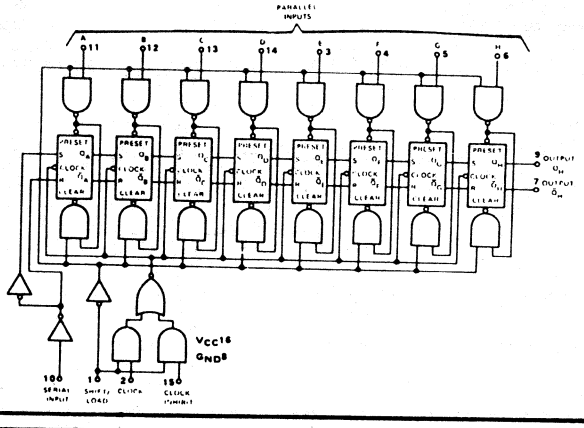

F108

F108 See PN 16cz
(See note)

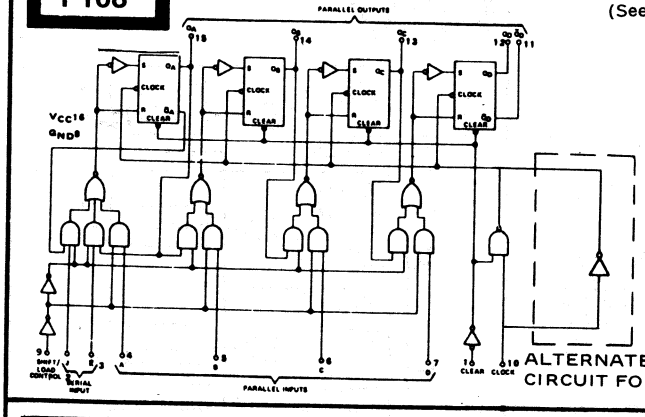

ALTERNATE CLOCK CIRCUIT FOR F108a

F110

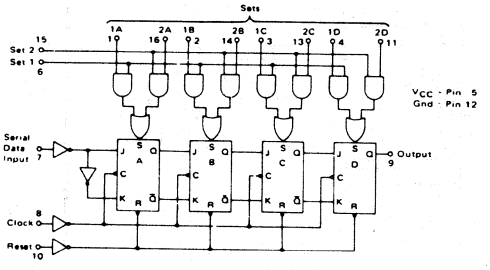

F115

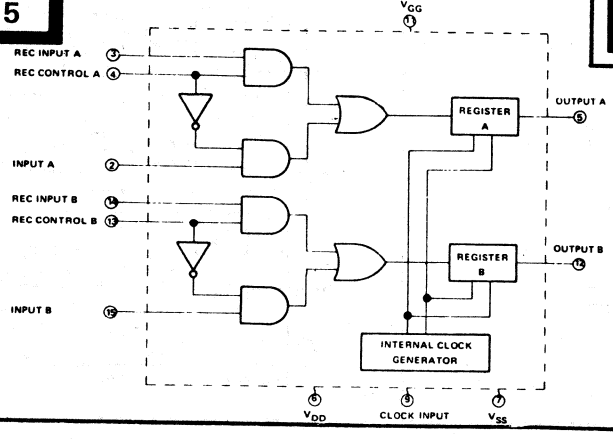

F119

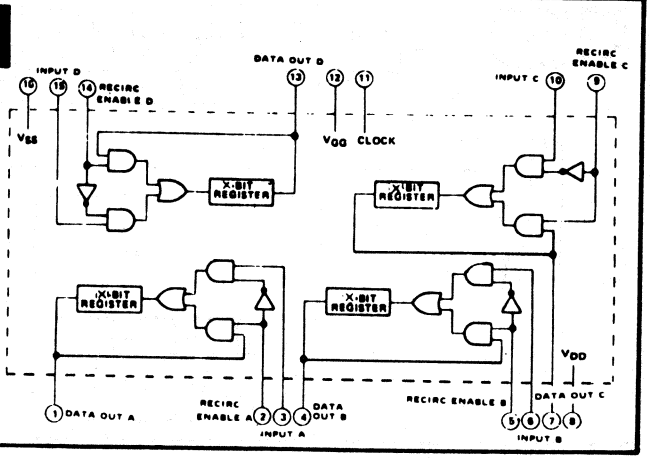

F120

	REG	BITS	IN	OUT	Ø1	Ø2	VSS	VDD	GND
F120	1	256	3	1	4	11	5	12	
	2		8	6					
	3		10	9					
	4		16	14					
F120a	1	512	2	1	3	7	4	8	
	2		6	5					
F120b	1	1024	2	5	3	7	4	8	
F120c	1	512	3	14	4	11	5	12	
	2		10	6					
F120d	1	1024	3	6	4	11	5	12	

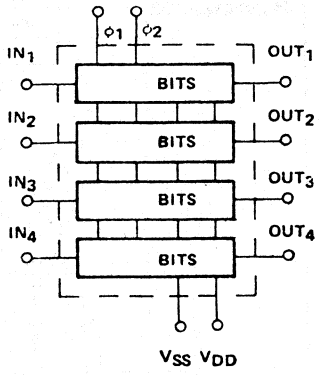

F122

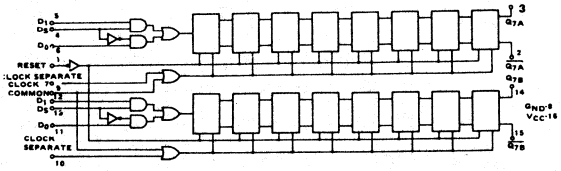

F123

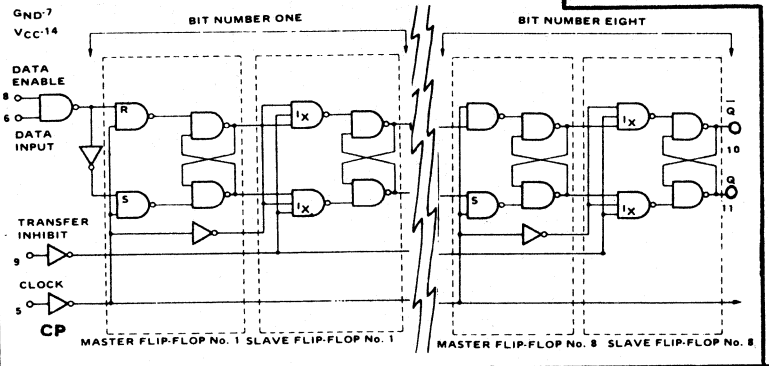

F124

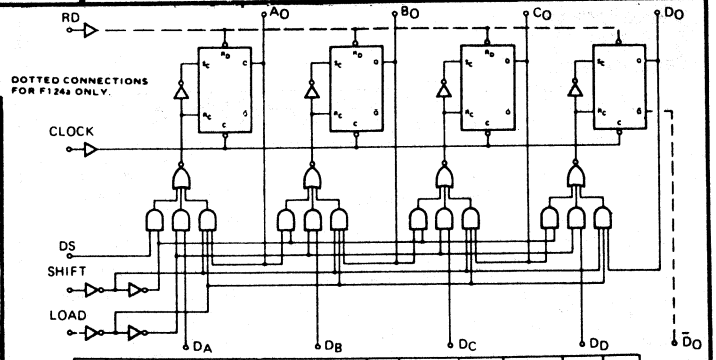

	RD	OUT A	OUT B	OUT C	OUT D	OUT D̄	D A	D B	D C	D D	DS	SHIFT	LOAD	CLOCK	VCC	GND
F124		5	7	9	11		3	2	15	14	4	13	10	6	16	8
F124a	1	5	7	9	11	12	3	2	15	14	4	13	10	6	16	8
F124b		4	6	8	10		2	1	13	12	3	11	9	5	14	7

F126

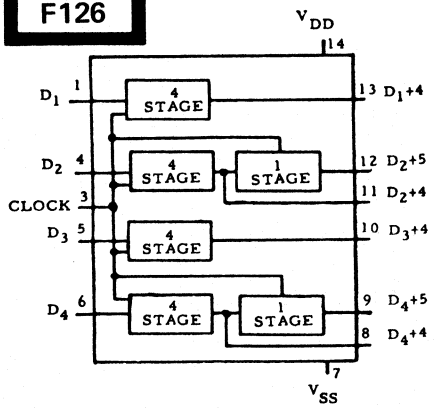

F127

	PKG	CKT	IN	OUT	CLOCK IN	CLOCK OUT	VCC	VDD
F127	CY	1	1	2	3	5	4	8
		2	7	6	3	5	4	8
F127a	ML	1	5	6	7	1	8	4
		2	3	2	7	1	8	4

F128

	PKG	CKT	RECIRCULATE	IN	OUT	ØIN	OUTPUT ENABLE	VCC	VDD	VGG
F128	ML	1	1	2	3	8	9	14	7	10
		2		13	12					
F128a	CY	1	10	1	2	4	6	5	3	7
		2		9	8					

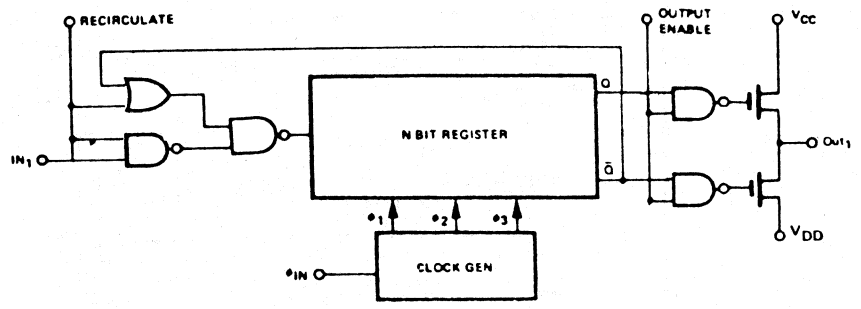

F129

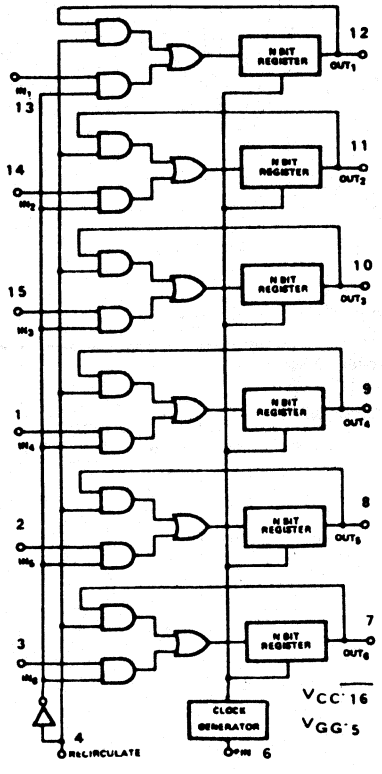

F130

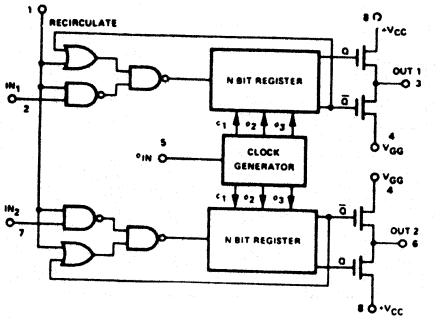

F131

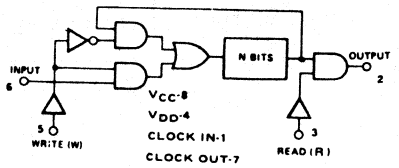

F132

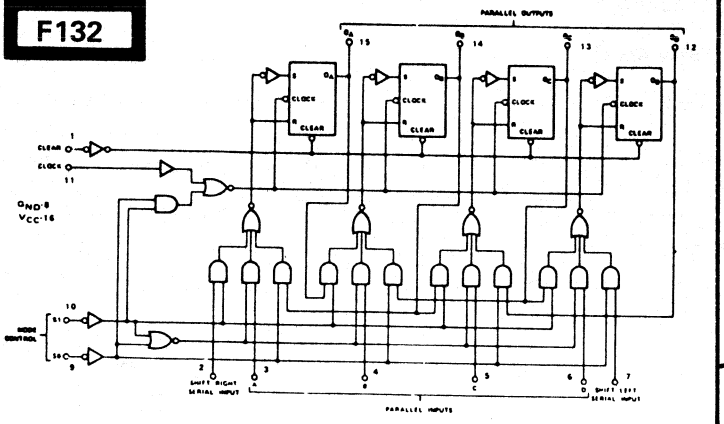

F140c

see PN16dd

F141

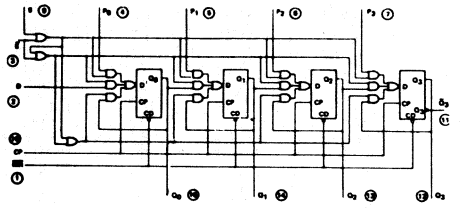

F142

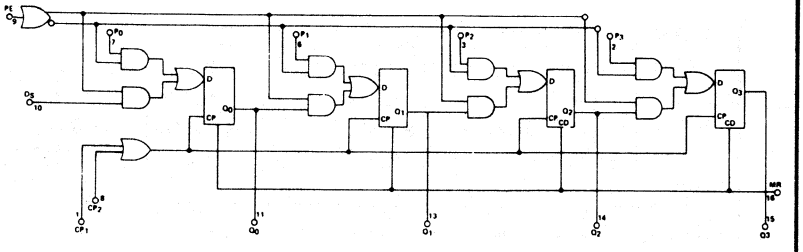

F147

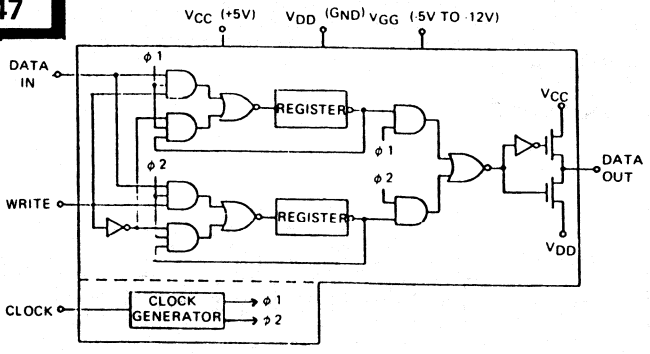

	PKG	DATA IN				DATA OUT				CLOCK	WRITE	VCC	VGG	VDD
		1	2	3	4	1	2	3	4					
F147	ML	3	6	9	12	2	7	8	14	4	13	1	5	10
F147a	CN	3	NC	NC	NC	5	NC	NC	NC	10	2	1	9	8
F147b	CN	3	6	NC	NC	4	5	NC	NC	10	2	1	9	8
F147c	ML	6	NC	NC	NC	8	NC	NC	NC	2	4	1	14	13
F147d	ML	6	9	NC	NC	7	8	NC	NC	2	4	1	14	13

F148

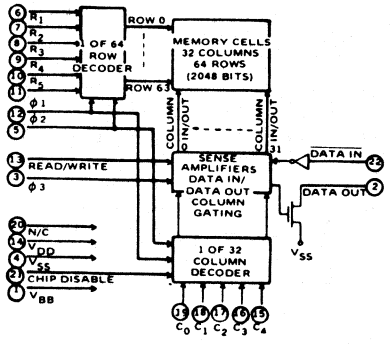

F149

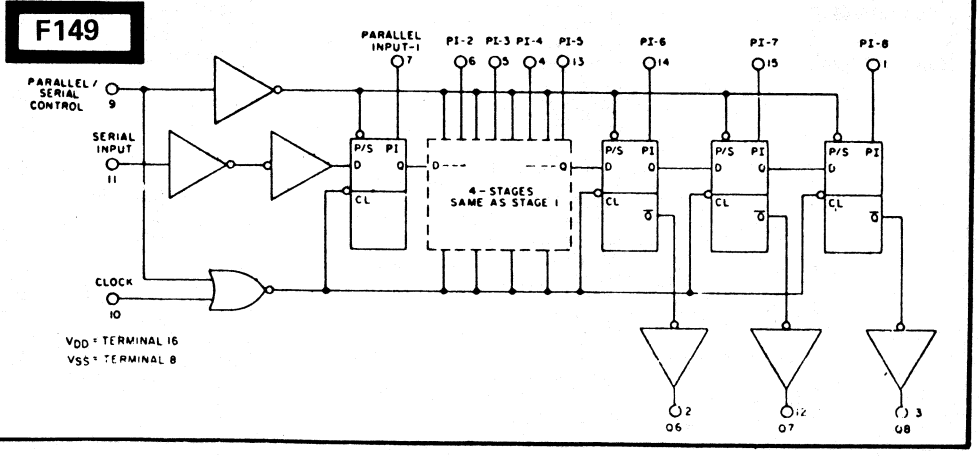

F152

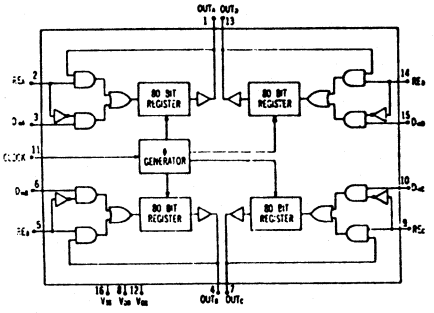

F154

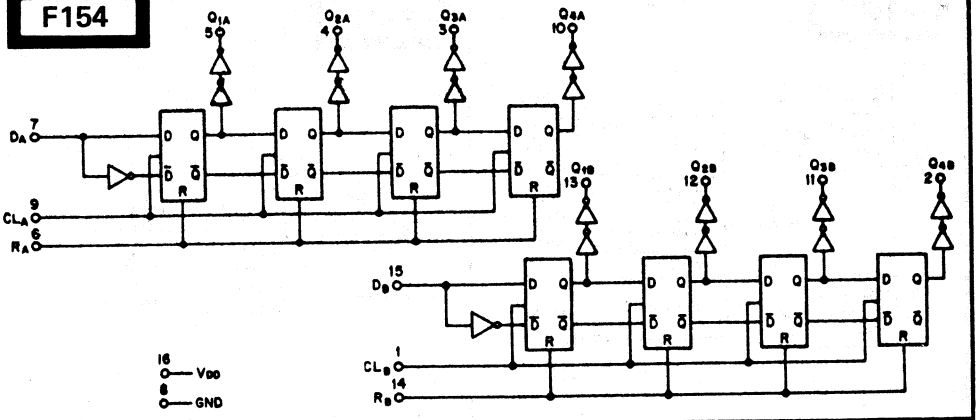

F155

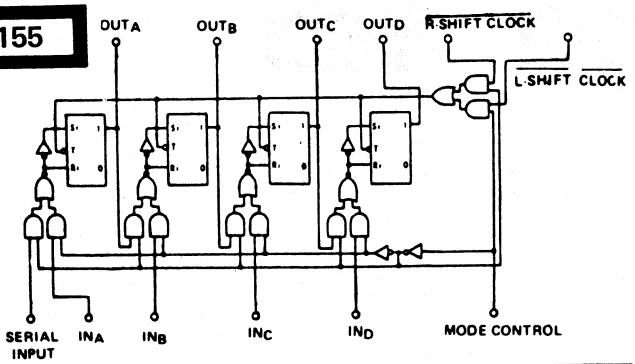

	SERIAL INP	INPUT A	INPUT B	INPUT C	INPUT D	OUTPUT A	OUTPUT B	OUTPUT C	OUTPUT D	R-SHIFT CLOCK	L-SHIFT CLOCK	MODE CONTROL	VCC	GND
F155	1	2	3	4	5	13	12	11	10	9	8	6	14	7
F155a	1.	14	2	3	5	13	12	10	9	7	8	6	4	11

F165

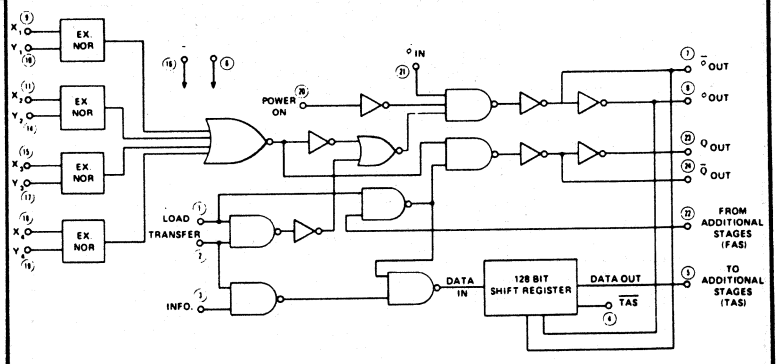

F167

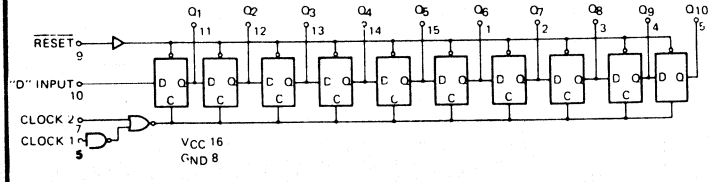

F168

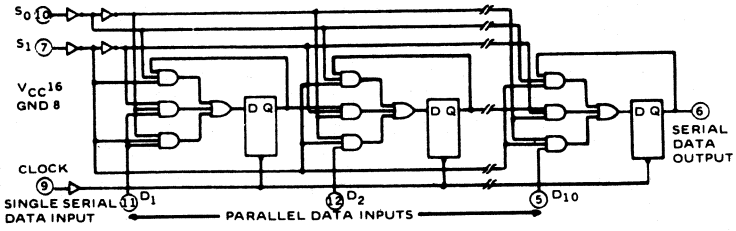

F171

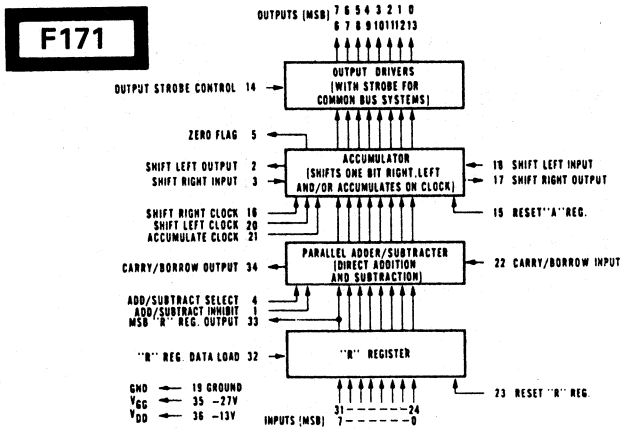

F173

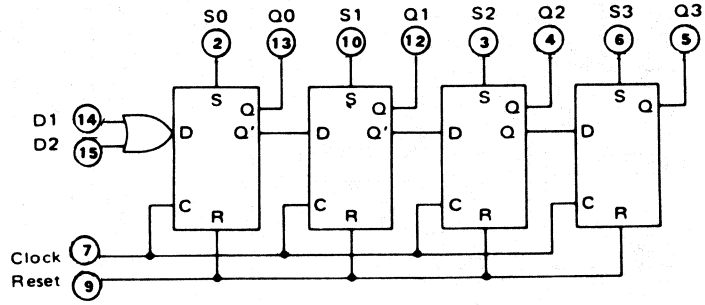

F174

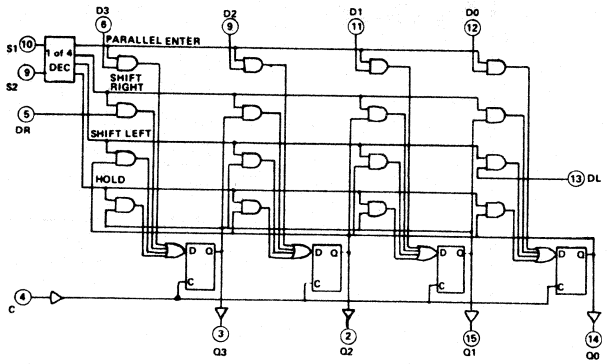

F176

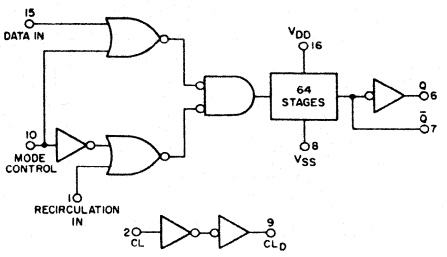

F177

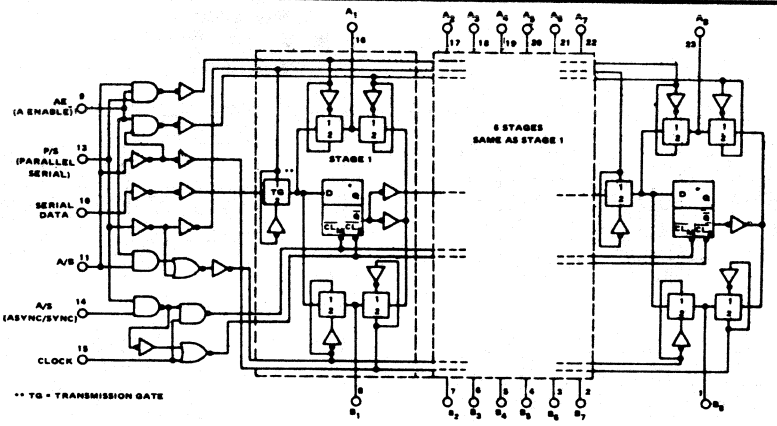

F178

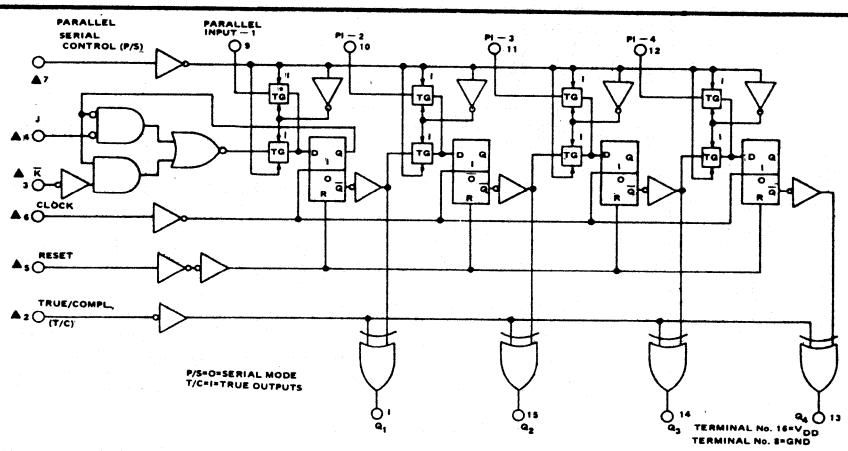

F179

F179 See PN 14n
F179a See PN 14o

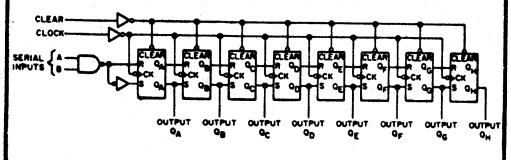

F191

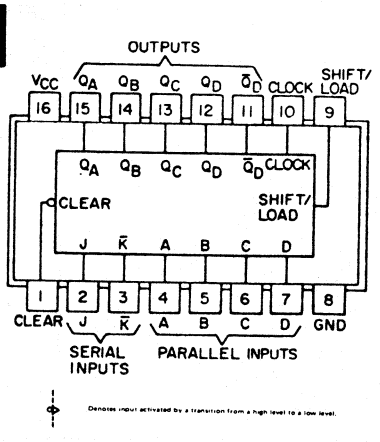

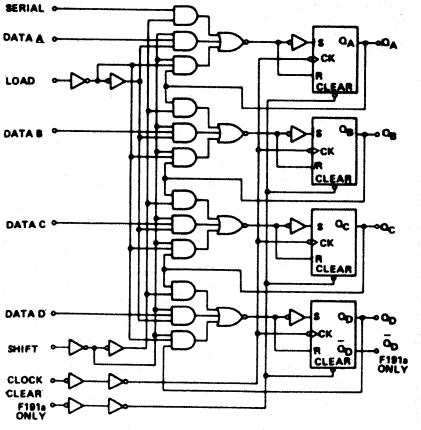

22. LOGIC/BLOCK DRAWINGS

IN DRAWING NUMBER SEQUENCE

F192

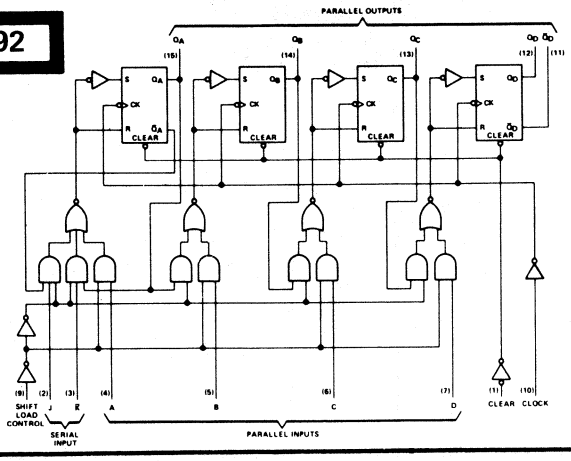

F209

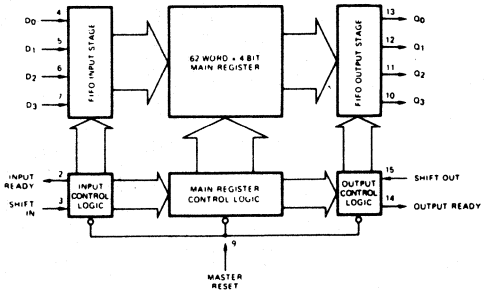

F218

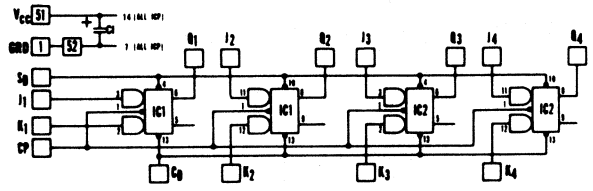

	CKT NO.	J	K	CP	SD 1	SD 2	SD 3	SD 4	Q 1	Q 2	Q 3	Q 4	$\overline{Q}$ 1	$\overline{Q}$ 2	$\overline{Q}$ 3	$\overline{Q}$ 4	CD
F218	1	47	49	44	48	36	46	39	50	38	45	41	35	40	37	43	42
	2	31	33	28	32	18	30	23	34	20	29	25	19	22	21	27	28
	3	15	17	10	14	2	12	7	16	4	13	9	3	6	5	11	8

F219

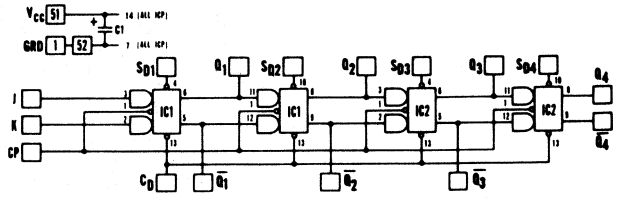

	CKT NO.	SD	CP	J 1	J 2	J 3	J 4	K 1	K 2	K 3	K 4	Q 1	Q 2	Q 3	Q 4	CP
F219	1	44	45	48	39	43	40	47	35	41	34	49	37	46	36	45
	2	26	29	32	23	27	22	31	19	25	18	33	21	28	20	29
	3	10	13	16	7	11	6	15	3	9	2	17	5	12	4	13

F220

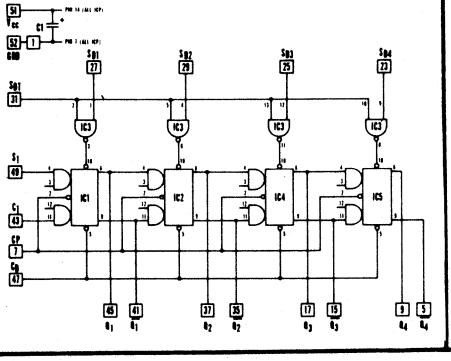

F234

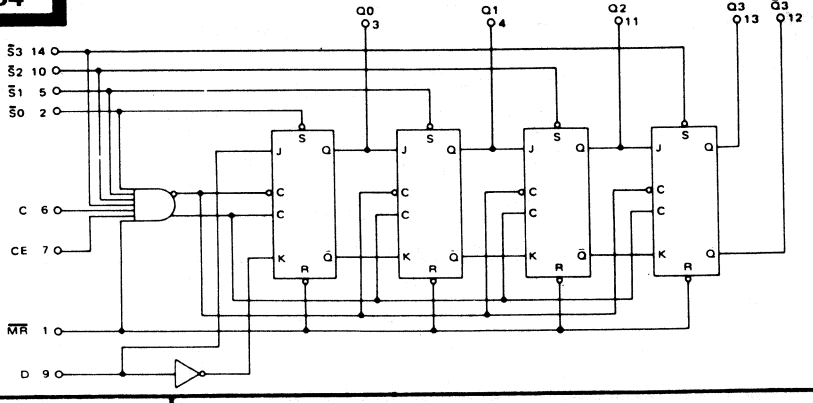

F235

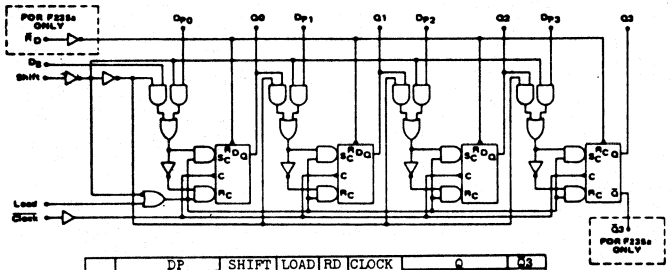

	DS	DP 0	DP 1	DP 2	DP 3	SHIFT	LOAD	RD	CLOCK	Q 0	Q 1	Q 2	Q 3	$\overline{Q}$3
F235	3	2	1	13	12	11	9		5	4	6	8	10	
F235a	4	3	2	15	14	13	10	1	6	5	7	9	11	12

F236

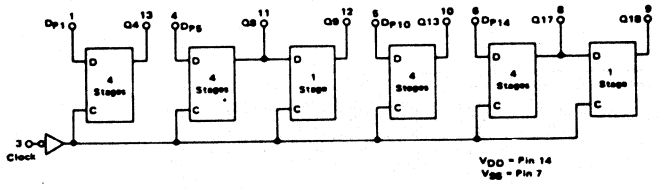

22. LOGIC/BLOCK DRAWINGS

IN DRAWING NUMBER SEQUENCE

F238

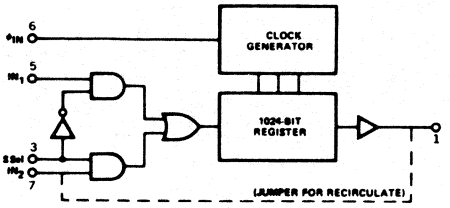

	2	4	8
F238	VGG	VDD	VCC(GND)
F238a		GND	VCC
F238b	VGG	VDD(GND)	VCC

F245

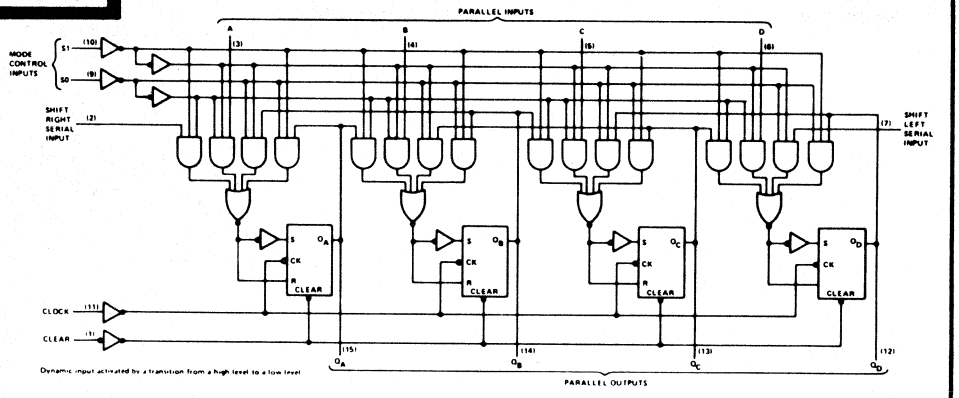

F246

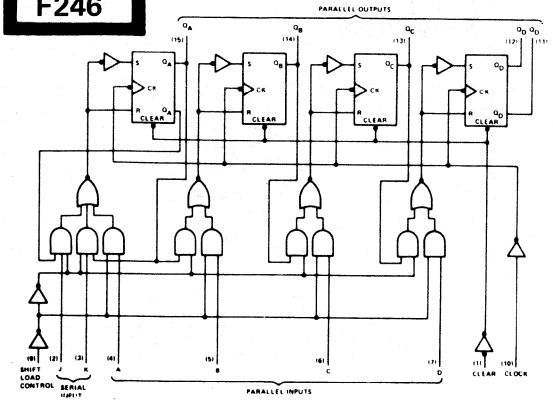

F248

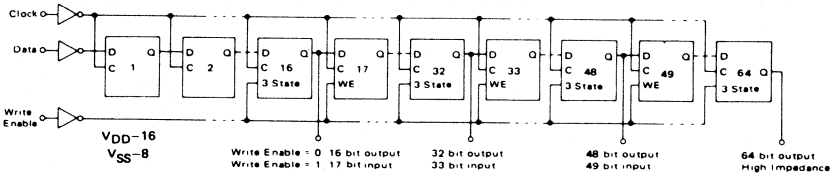

	CKT	CLOCK	16OUT/17IN	48OUT/49IN	WE	64OUT	32OUT/33IN	DATA
F248	1	4	1	2	3	5	6	7
	2	12	15	14	13	11	10	9

F250

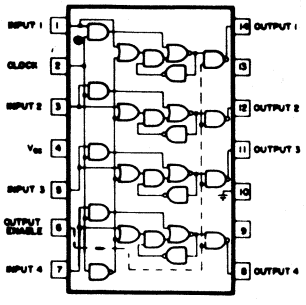

F250—TWO 5K PULLUP RESISTORS ARE PROVIDED IN THE PACKAGE AND ARE INTERNALLY CONNECTED TO V_{CC} AND BROUGHT OUT ON PINS 9 AND 13.

F250a—OUTPUT ENABLE AND ALL CONNECTIONS EXCLUDED. (DOTTED LINE PORTION.)

F251

F251 See PN 14k

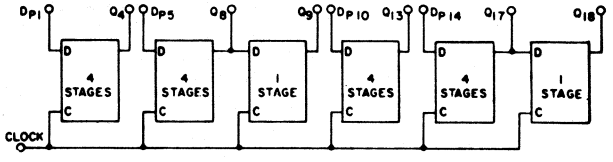

F252

F252 See PN 16dp

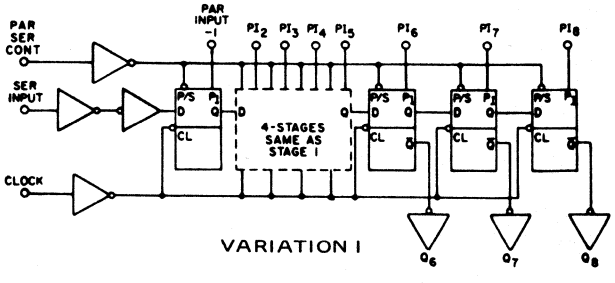

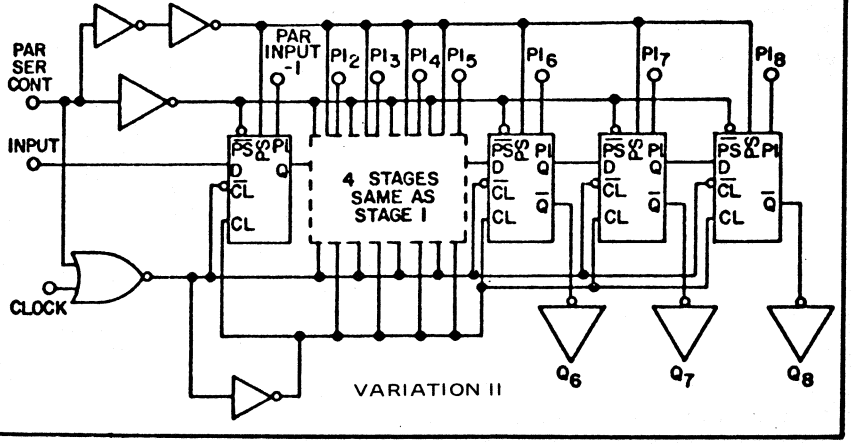

F253

F253 See PN 16n

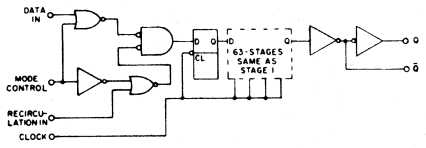

F254

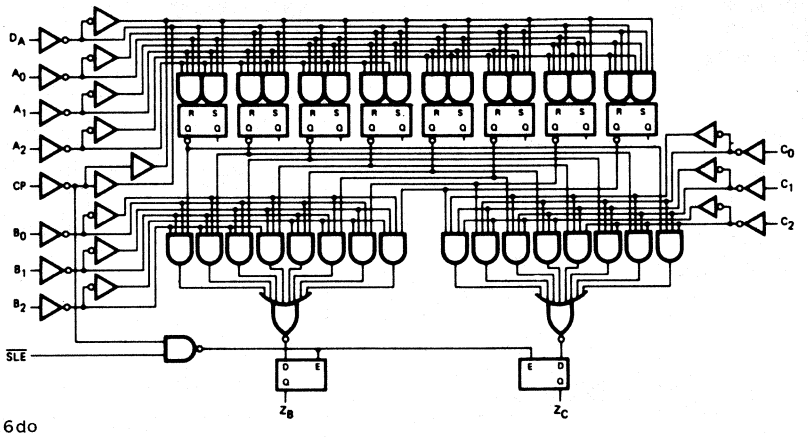

F254 See PN 16do

F256

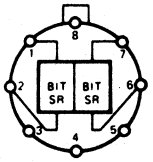

	PIN NUMBERS							
	1	2	3	4	5	6	7	8
F256	Inp1	OUTP1	Ø2	VCC	Ø1	OUTP2	Inp2	VDD
F256a	Inp1	OUTP1	VØ	VSS	VGG	OUTP2	Inp2	VDD

F257

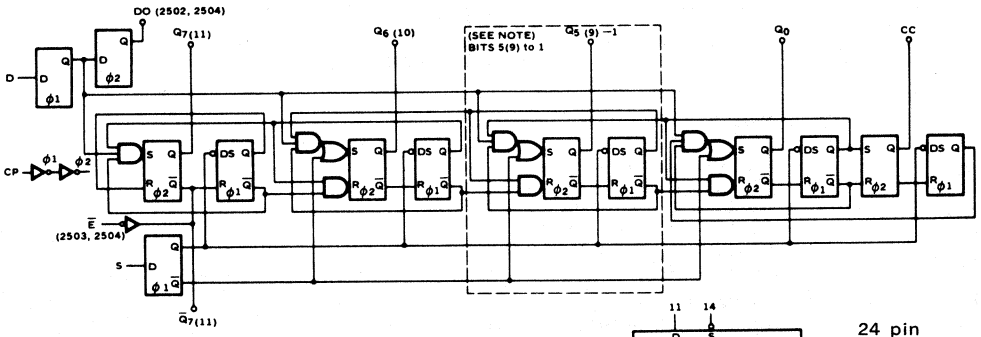

NOTE:
NUMBERS IN PARENTHESES ARE FOR F257a.

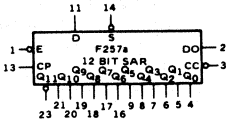

VCC = Pin 16
GND = Pin 12
NC = Pins 10, 15, 22

F257 See PN 16du

F258

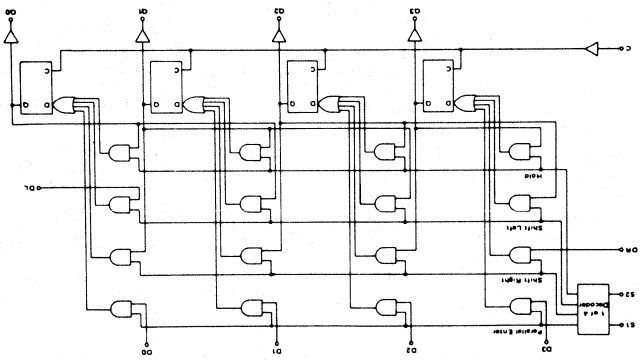

DIP pin outs See PN 16dr
Flatpak pin outs See PN 16dq

F259

F259 See PN 16dt

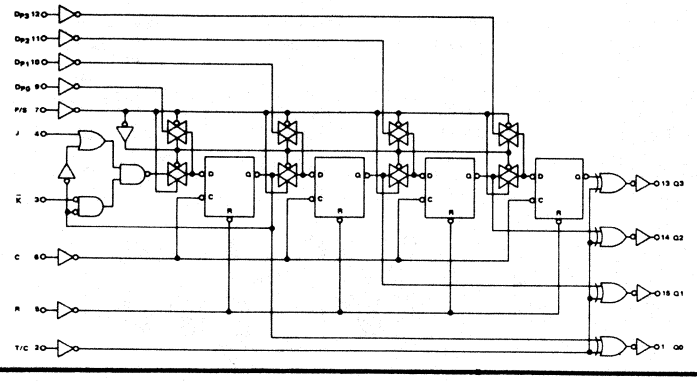

F261

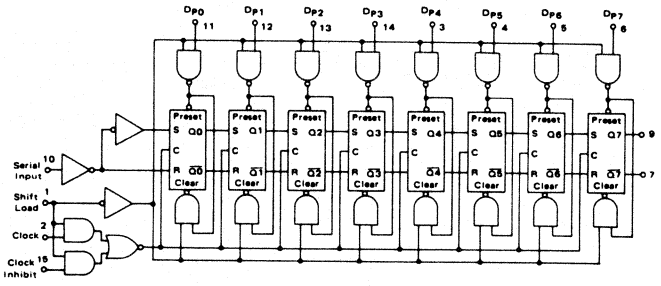

F262

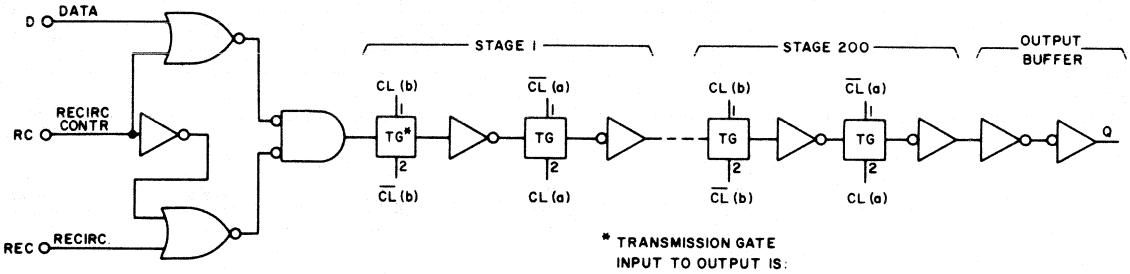

* TRANSMISSION GATE
INPUT TO OUTPUT IS:

(a) A BIDIRECTIONAL LOW IMPEDANCE WHEN CONTROL INPUT IS "LOW" AND CONTROL INPUT 2 IS "HIGH"

(b) AN OPEN CIRCUIT WHEN CONTROL INPUT 1 IS "HIGH" AND CONTROL INPUT 2 IS "LOW"

CL_1 = PHASE 1 OF 2-PHASE CLOCK
CL_{1D} = DELAYED CL_1
CL_2 = PHASE 2 OF 2-PHASE CLOCK
CL_{2D} = DELAYED CL_2

CL (a) = INTERNAL CLOCK IN PHASE WITH CL_1
CL (b) = INTERNAL CLOCK IN PHASE WITH CL_2

F262 See PN 16dr

F263

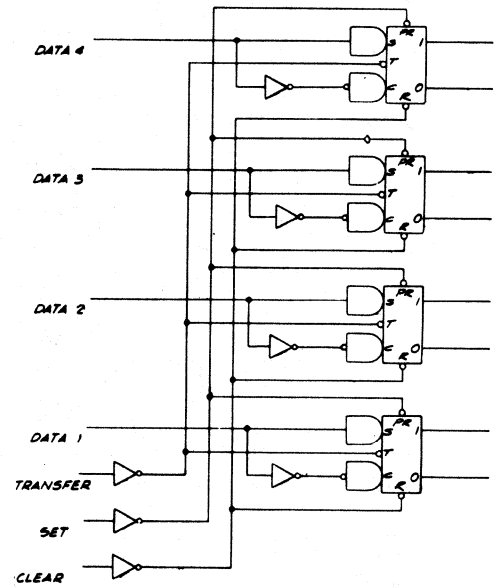

CIRCUITS 1&2

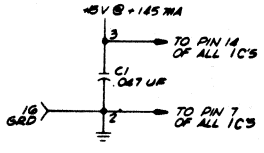

F264

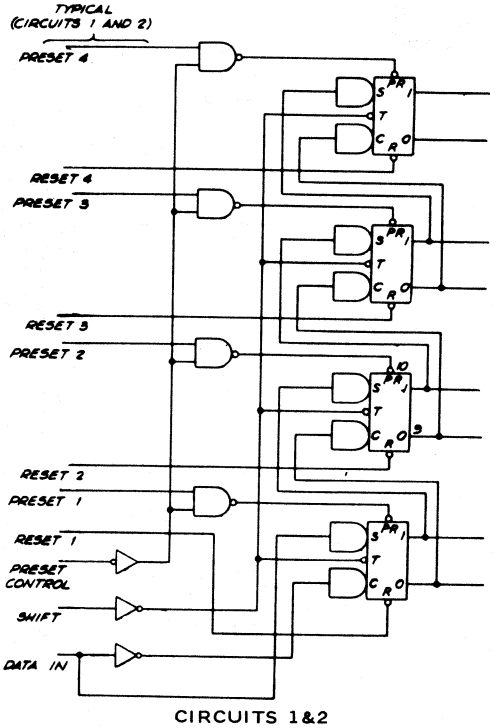

CIRCUITS 1&2

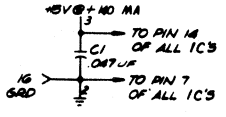

F265

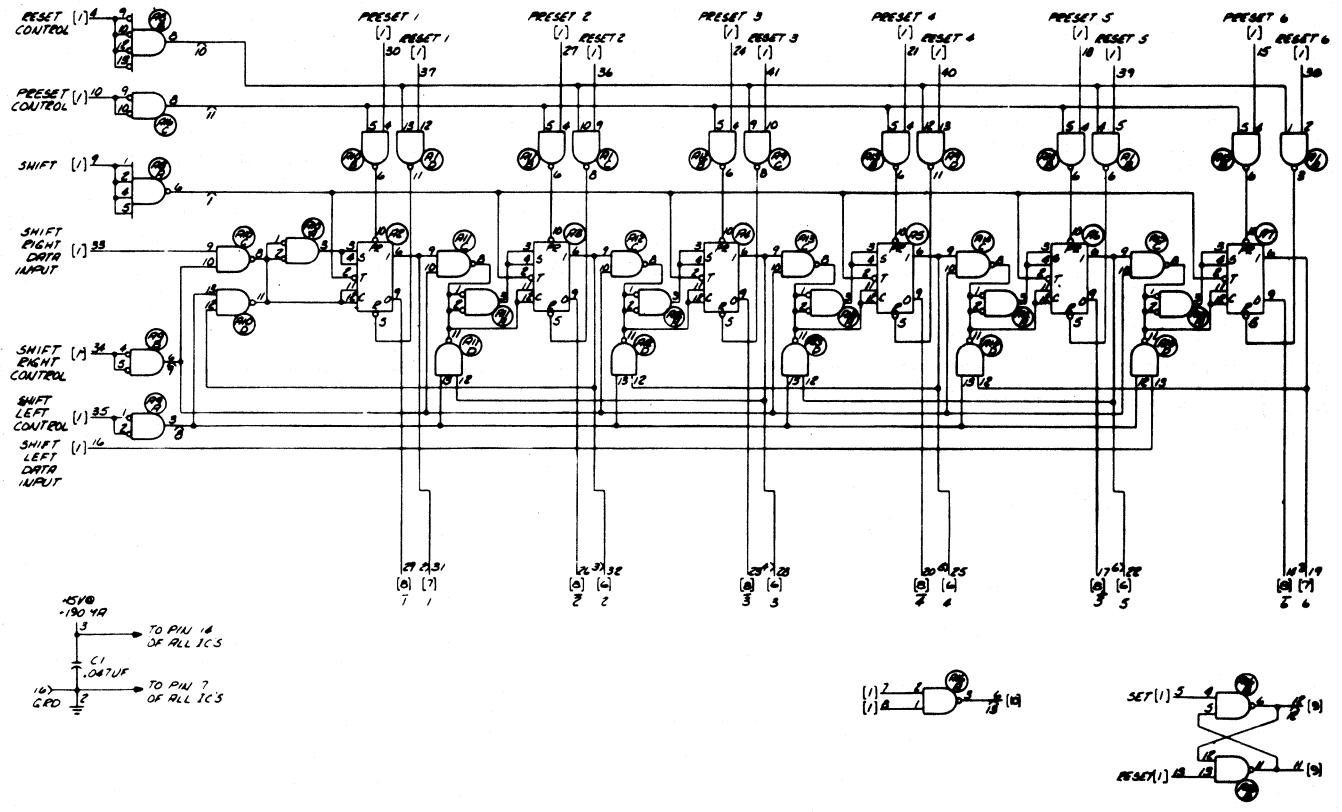

F266

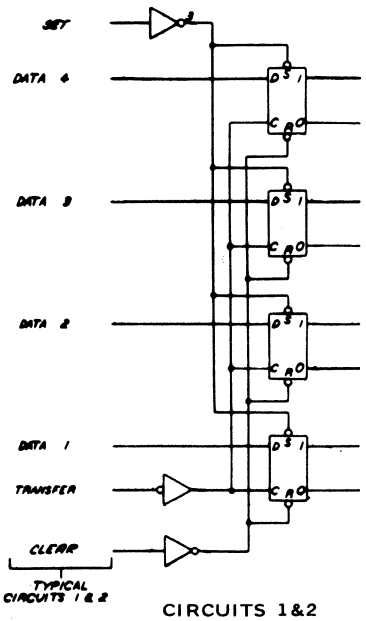

CIRCUITS 1&2

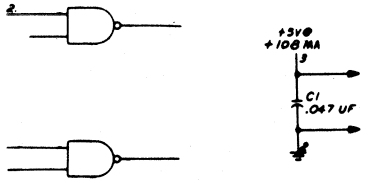

F267

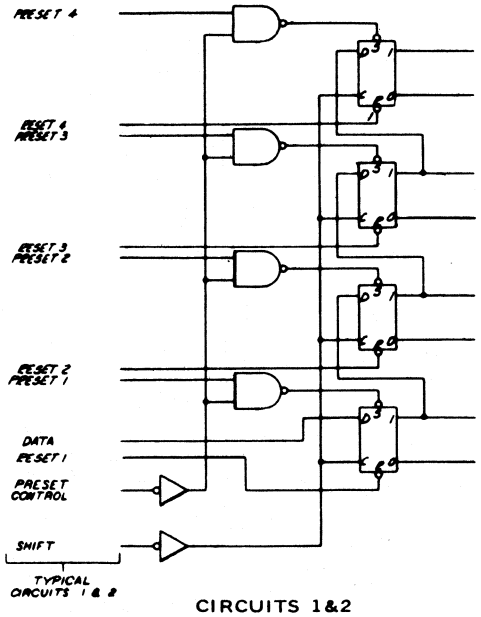

CIRCUITS 1&2

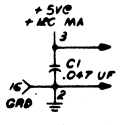

F268

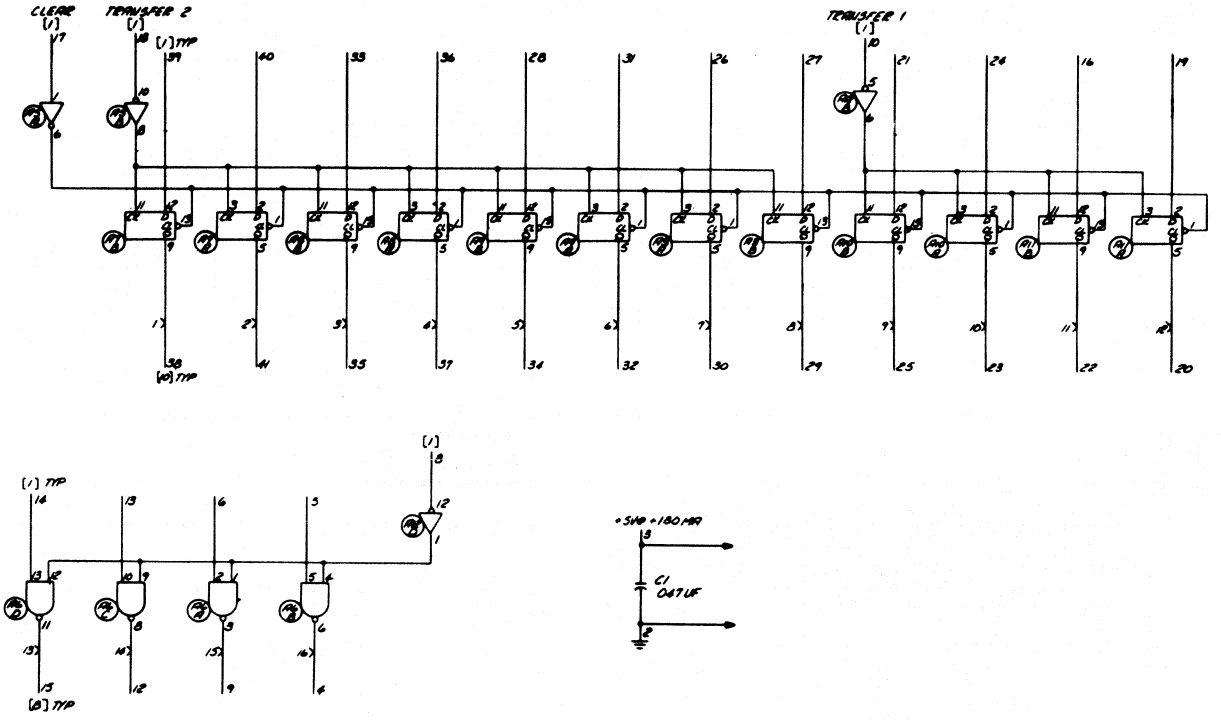

F269

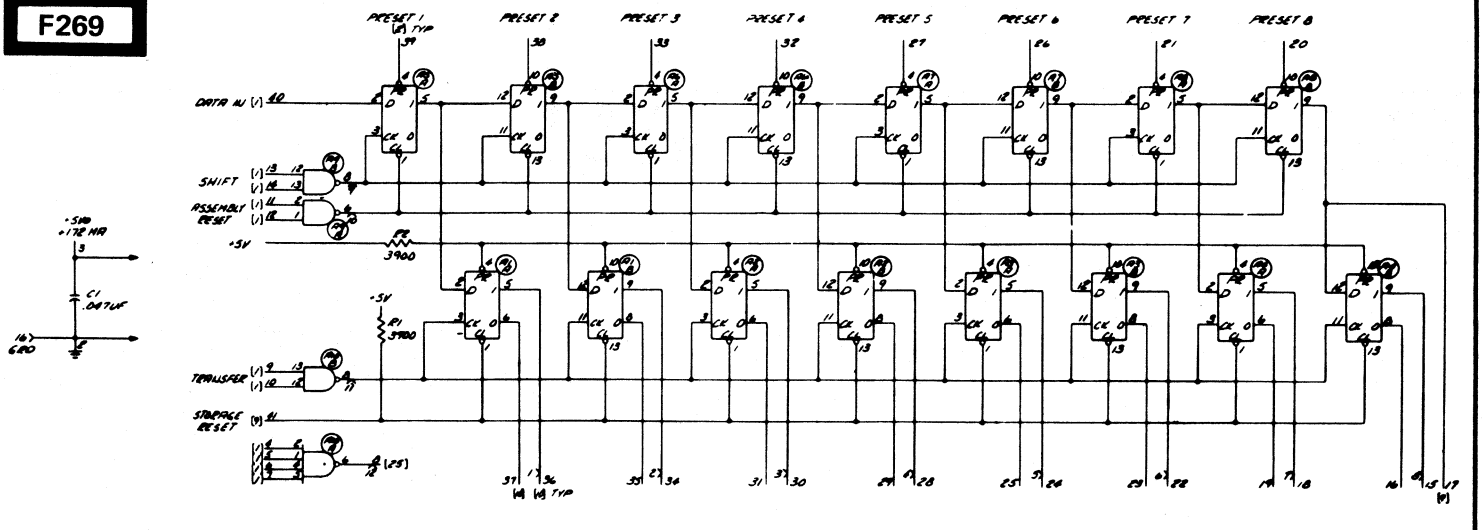

F270

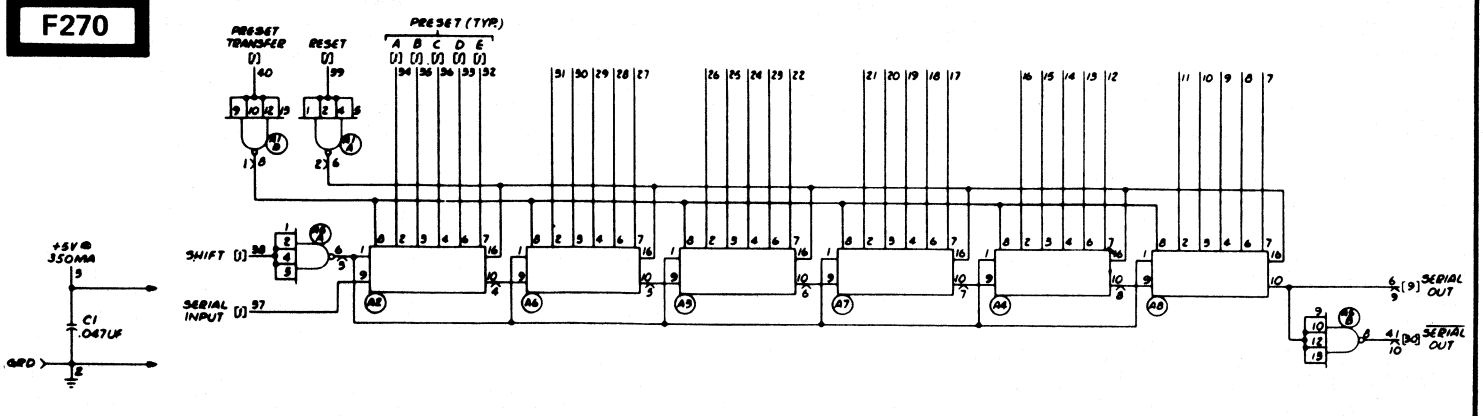

F271

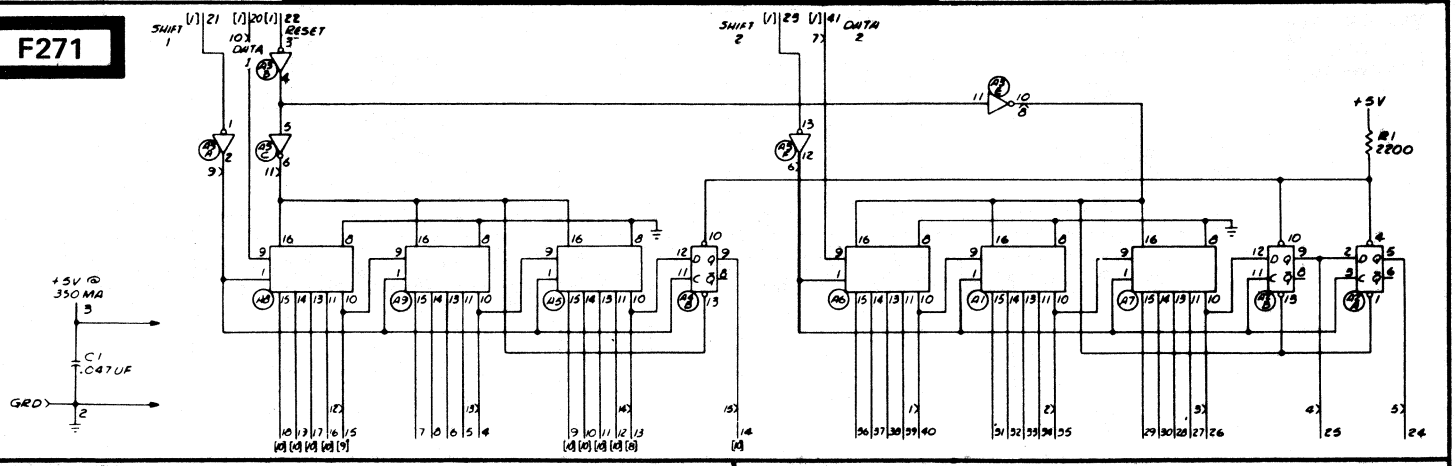

F272

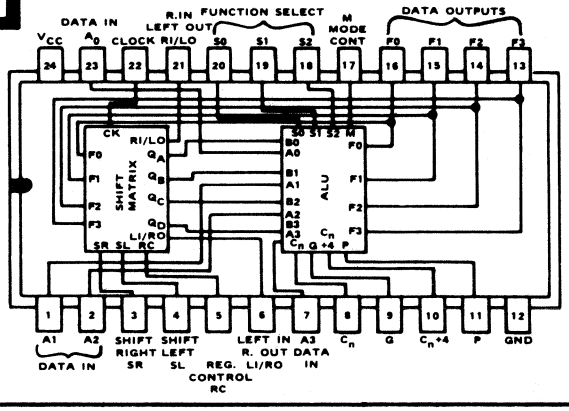

F273

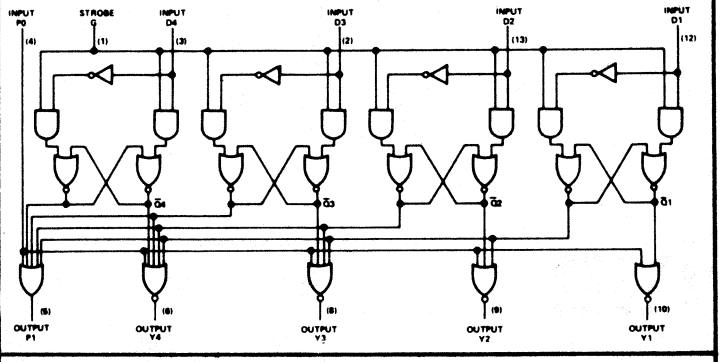

F274

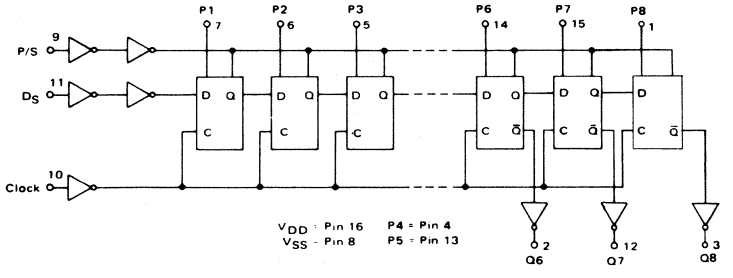

F275

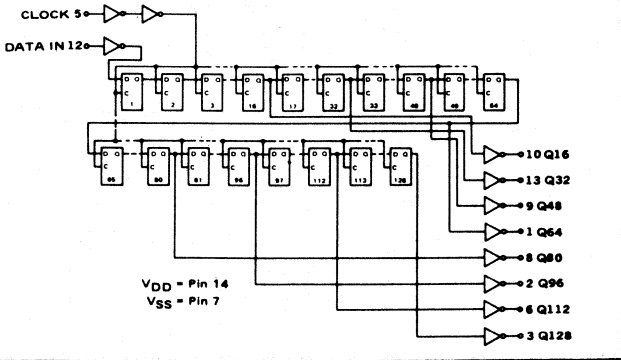

F281

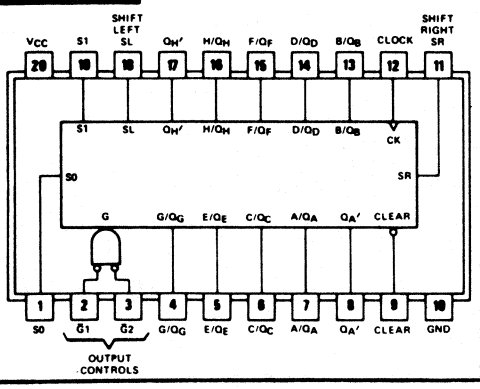

F282

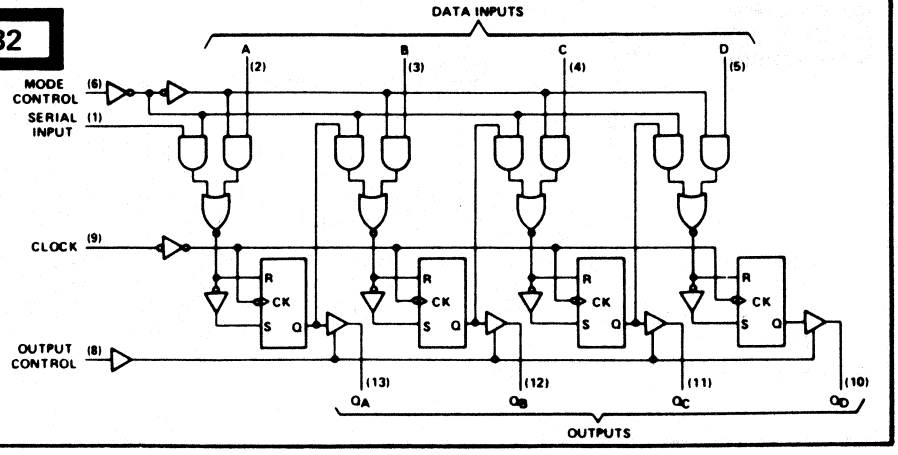

F283

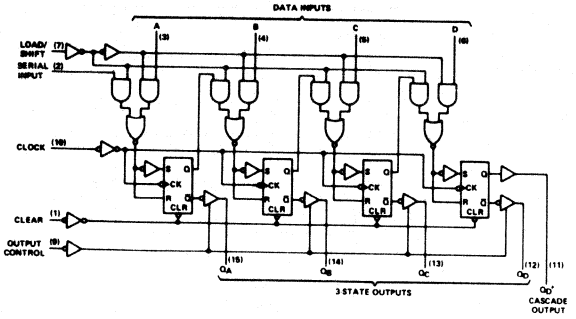

F284

See PN 16dw

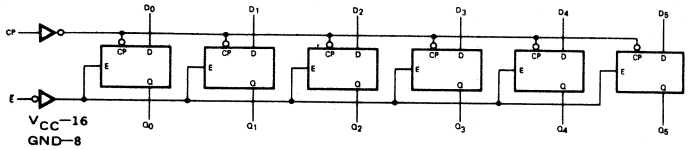

F285

See PN 16dv

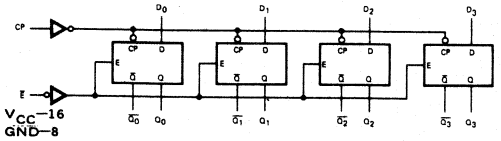

F286

See PN 16dx

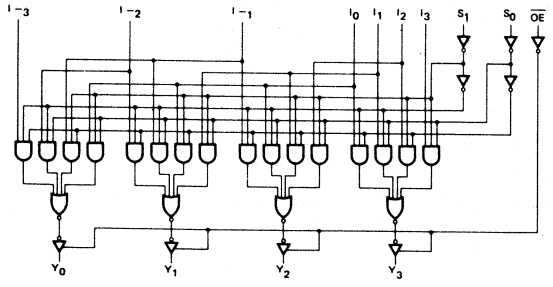

F287

See PN 8n

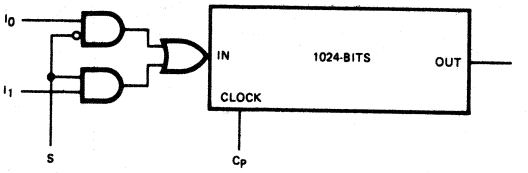

F288

F288 See PN 8o

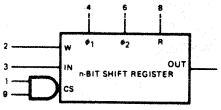

F288 — n=512
F288a — n=1024

VCC = Pin 5
VDD = Pin 10

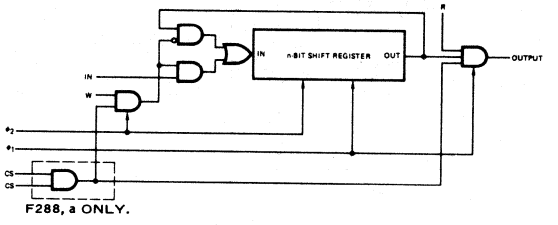

F289

See PN 8p

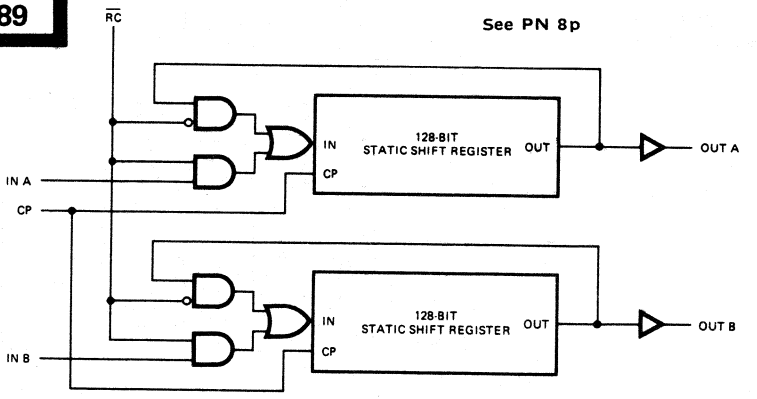

F290

See PN 16dy

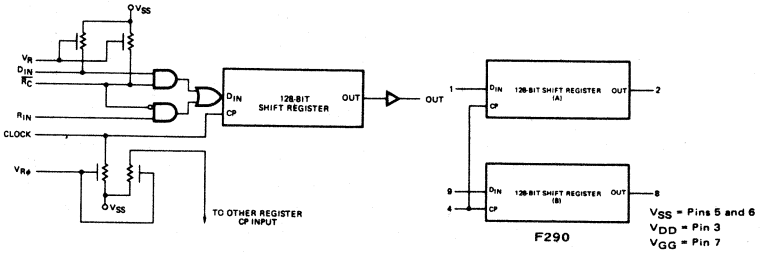

F291

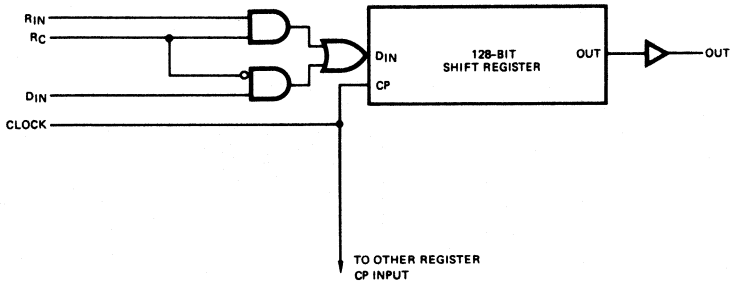

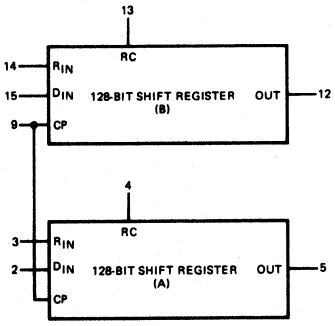

V_{SS} = Pin 7
V_{DD} = Pin 6
V_{GG} = Pin 11

F292

F292 see PN 16dz, 10e, 8g

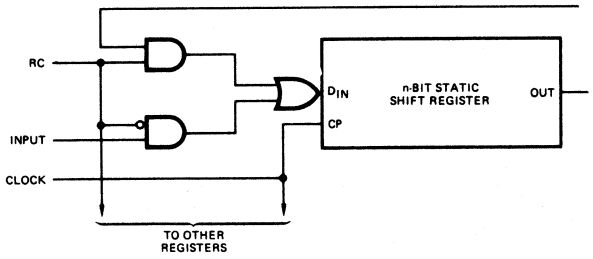

F292 — n=128
F292a — n=256
F292b — n=512

F294

F294 see PN 16ea

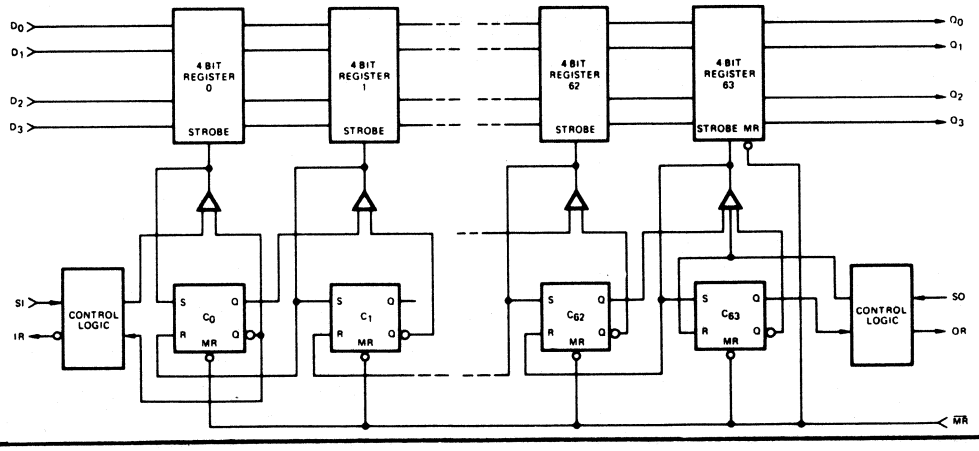

F295

F295 see PN 16eb

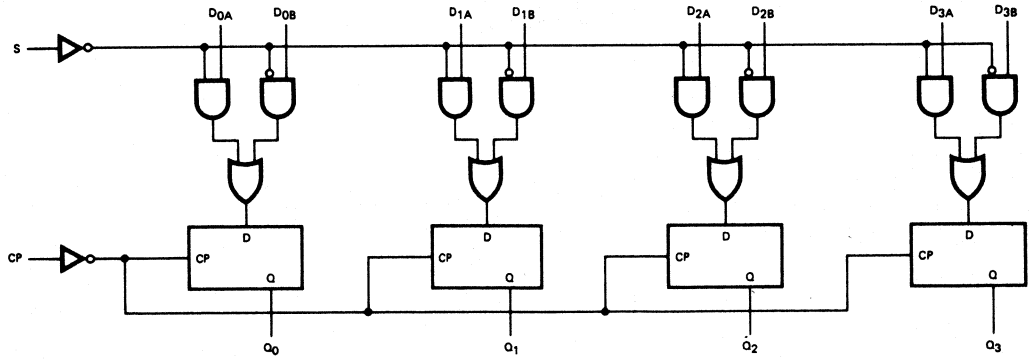

22. LOGIC/BLOCK DRAWINGS

IN DRAWING NUMBER SEQUENCE

F297

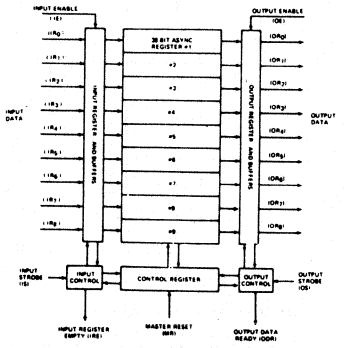

F298

See PN 16ec

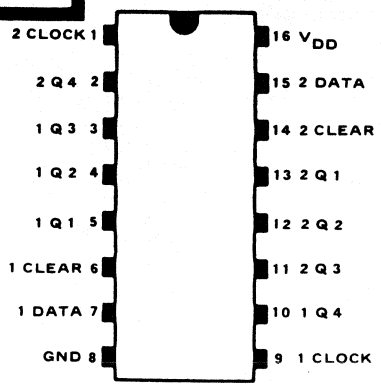

F299

See PN 16ed

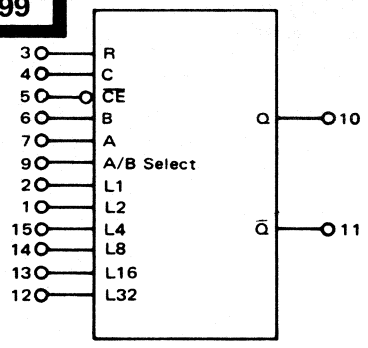

VDD = Pin 16
VSS = Pin 8

F303

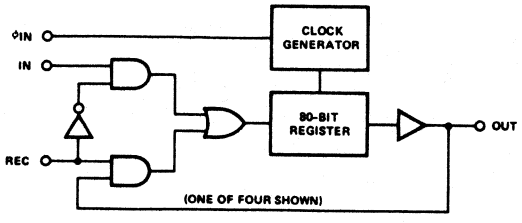

1.	OUT 1	16.	V_{CC}
2.	Recirculate 1	15.	IN 4
3.	IN 1	14.	Recirculate 4
4.	OUT 2	13.	OUT 4
5.	Recirculate 2	12.	V_{GG} *
6.	IN 2	11.	ϕ IN
7.	OUT 3	10.	IN 3
8.	V_{DD} (Ground)	9.	Recirculate 3

*F303a = NC

F306

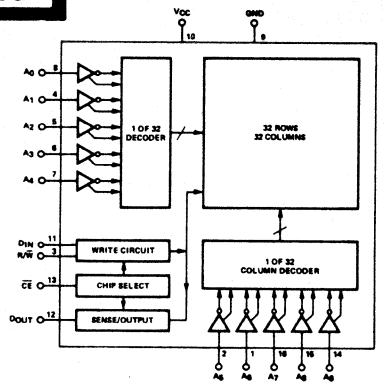

F317

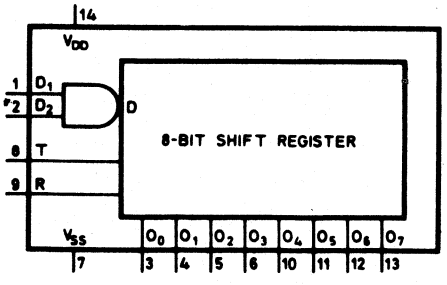

F318

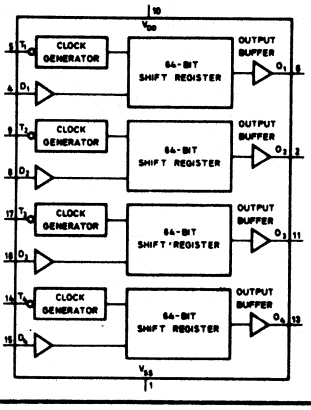

F321

See PN 16ef

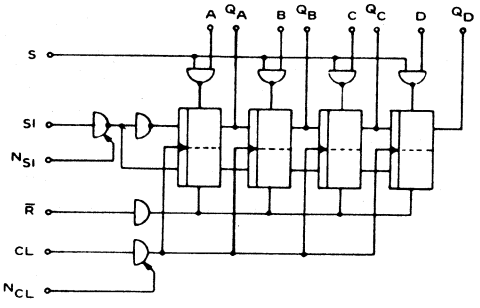

F324

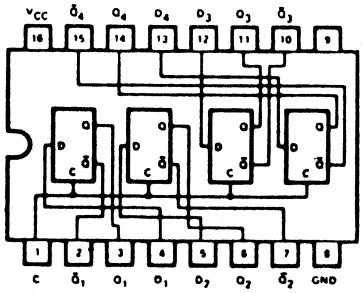

F326

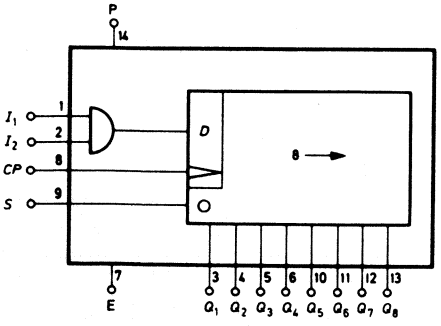

F327

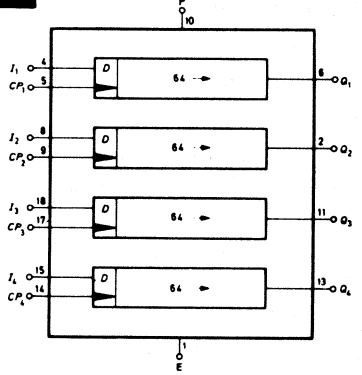

22. LOGIC/BLOCK DRAWINGS

IN DRAWING NUMBER SEQUENCE

F329

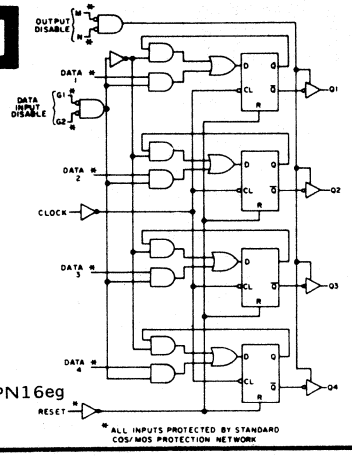

F329 see PN16eg

F330

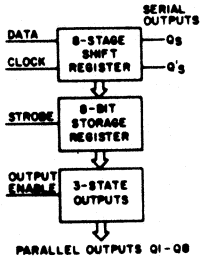

F331

F331 see PN 16eh

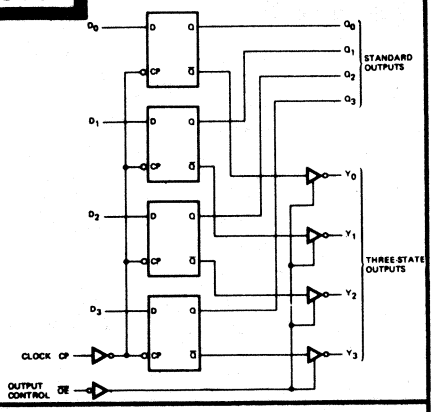

F340

F430 see PN 16ei,8w,10g

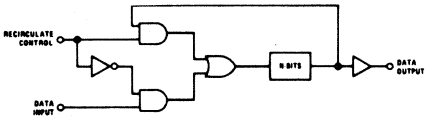

F341

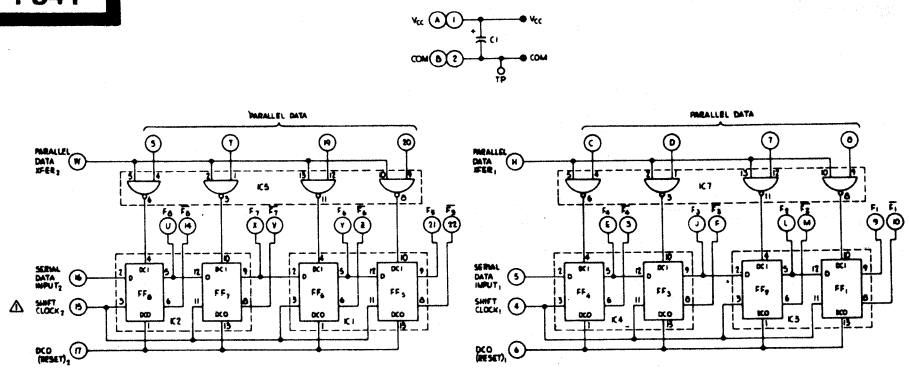

F342

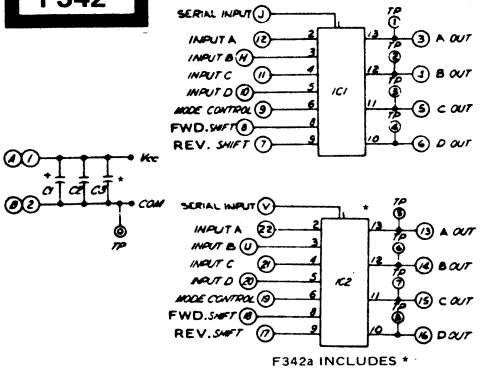

F342a INCLUDES *

F343

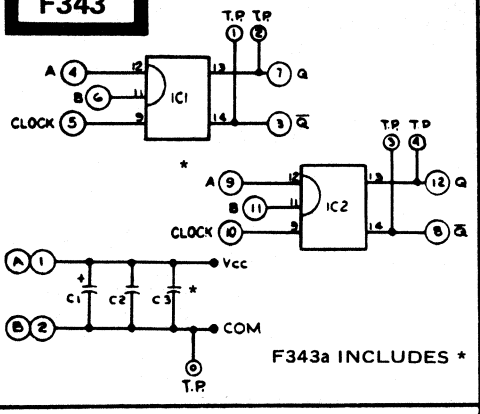

F347

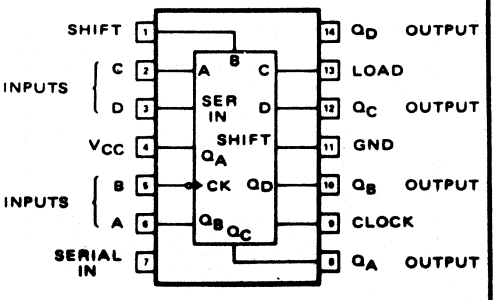

F344

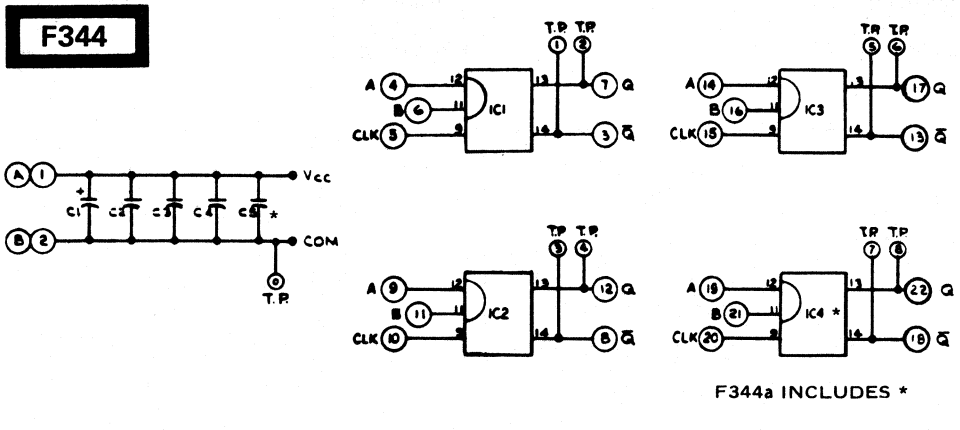

F349

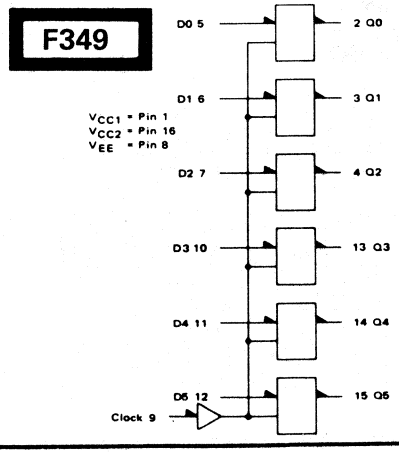

F350

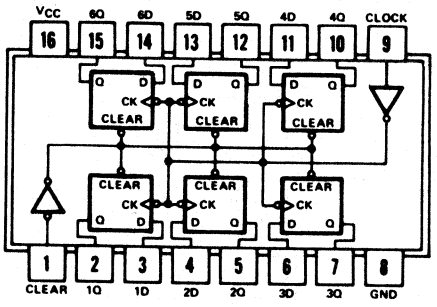

F351

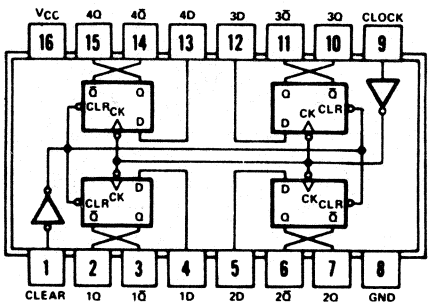

F354

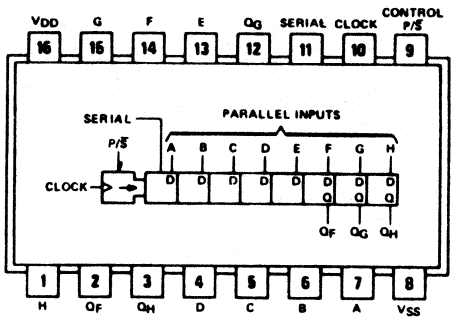

F355

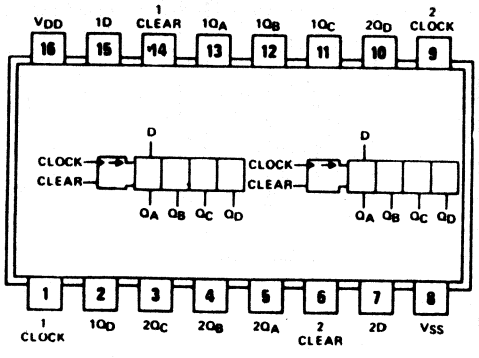

F357

VCC = PIN (16), GND = PIN (8)

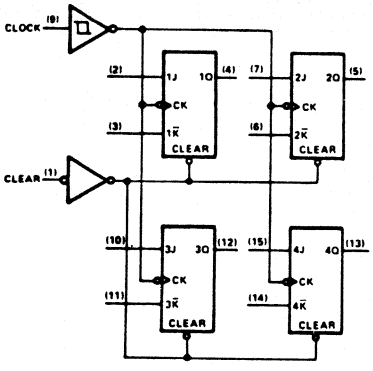

F359

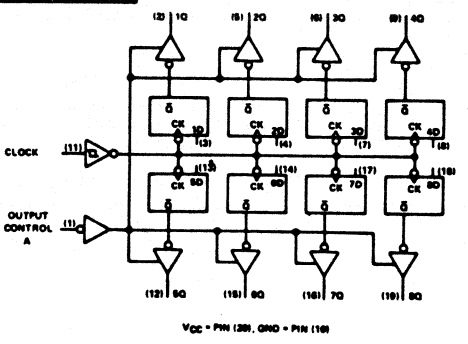

F360

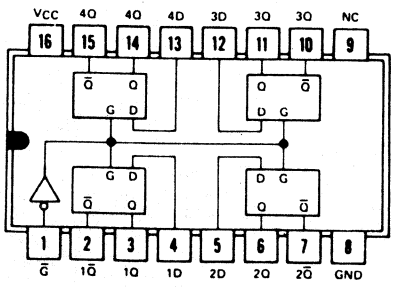

F362

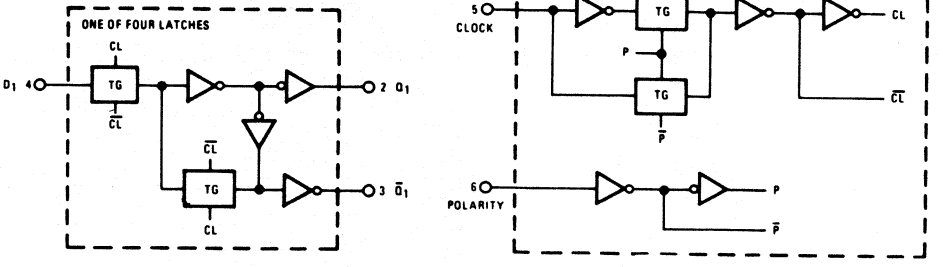

F366

F366	PKG	CKT	Q̄	Q	C	D
	MP	1	1	16	13	2
		2	14	15	13	3
		3	11	10	4	6
		4	8	9	4	7

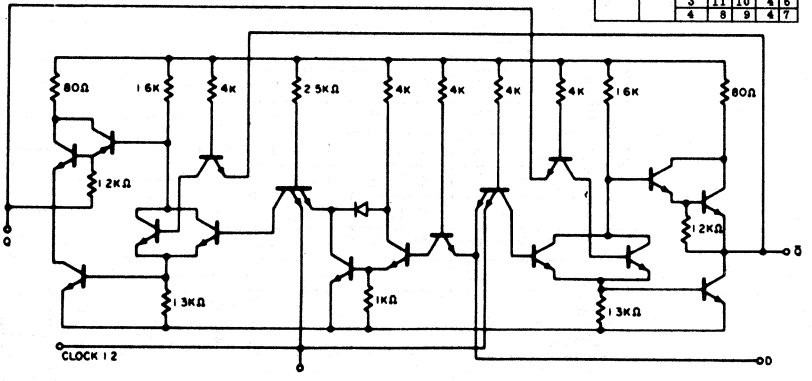

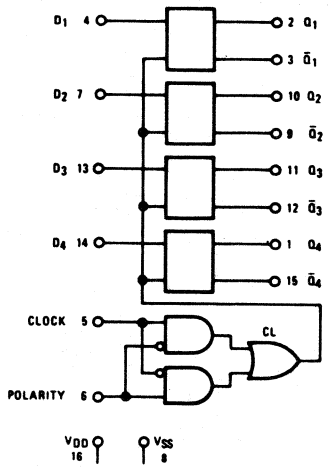

22. LOGIC/BLOCK DRAWINGS

IN DRAWING NUMBER SEQUENCE

F368

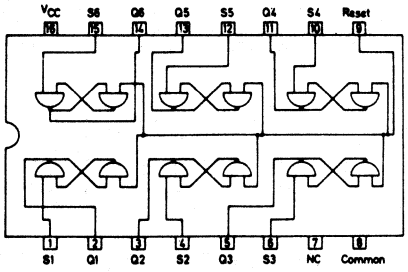

F369

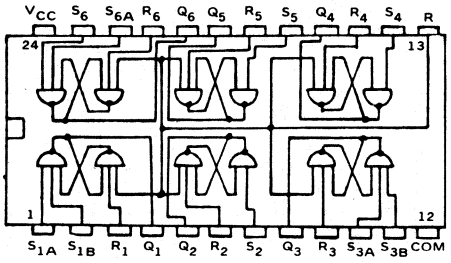

F372

F372 See PN 16en

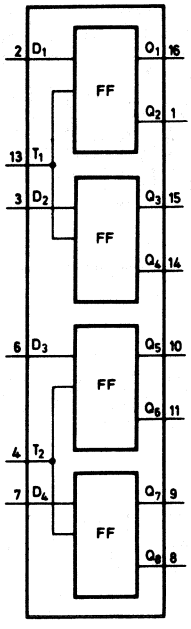

F373

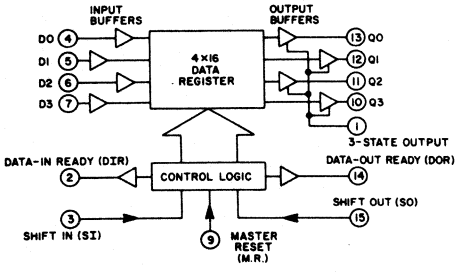

F378

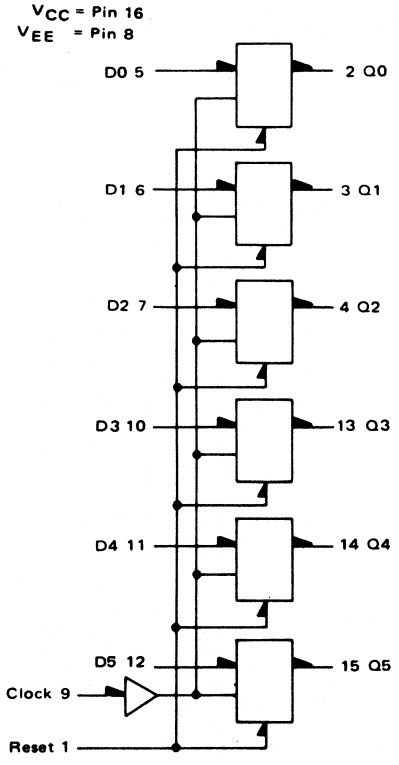

F379

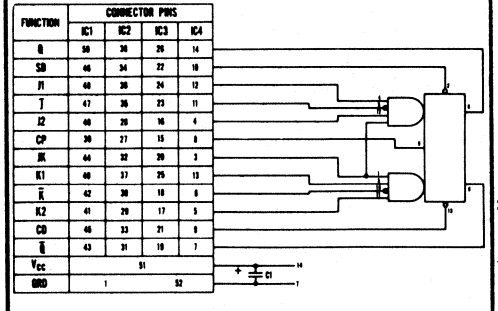

F380

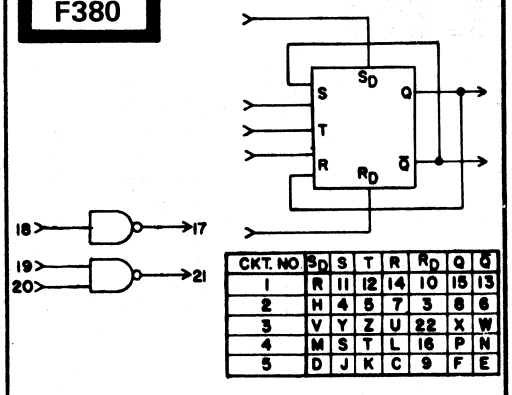

CKT. NO	SD	S	T	R	RD	Q	Q̄
	R	11	12	14	10	15	13
2	H	4	5	7	3	6	6
3	V	Y	Z	U	22	X	W
4	M	S	T	L	16	P	N
5	D	J	K	C	9	F	E

F381

FUNCTION	CONNECTOR PINS					
	IC1	IC2	IC3	IC4	IC5	IC6
Q	45	37	29	21	13	5
S̄	43	35	27	19	11	3
R̄	47	39	31	23	15	7
Q̄	49	41	33	25	17	9
Q	44	36	28	20	12	4
S̄	46	38	30	22	14	6
R̄	50	42	34	26	18	10
Q̄	48	40	32	24	16	8
VCC	51					
GRD	1				52	

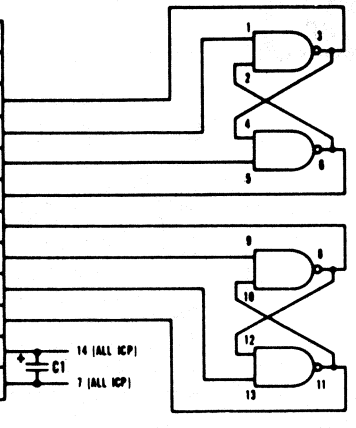

F383

CKT. NO	A	B	C	D	E
1	C	3	4	E	D
2	6	7	H	F	5
3	J	8	9	L	K
4	11	12	N	M	10
5	P	13	14	S	R
6	16	17	U	T	15
7	V	18	19	X	W
8	21	22	Z	Y	20

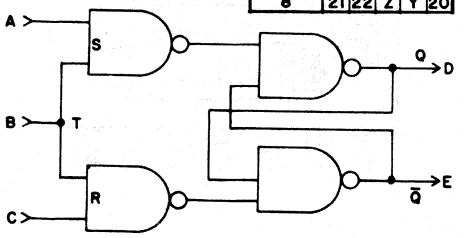

F388

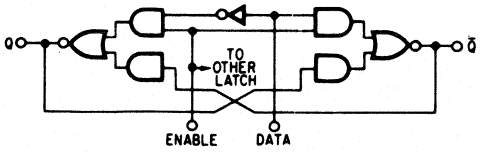

	CKT	Q	E	D	$\bar{Q}$	VCC	GND
F388	1	4	15	2	3	16	8
	2	5	15	1	6	16	8
	3	11	7	13	12	16	8
	4	10	7	14	9	16	8

F397

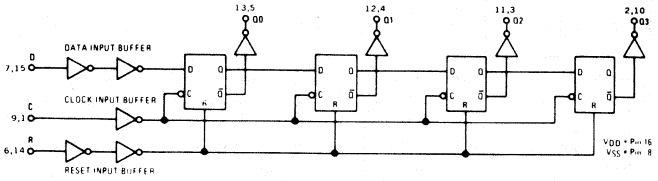

F398

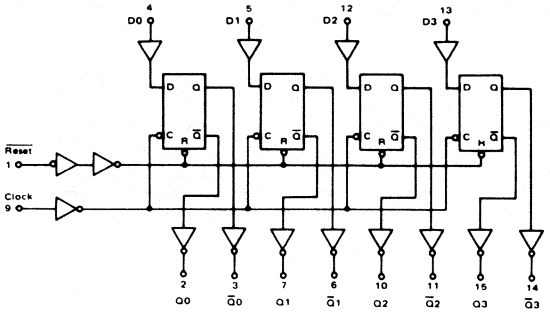

F399

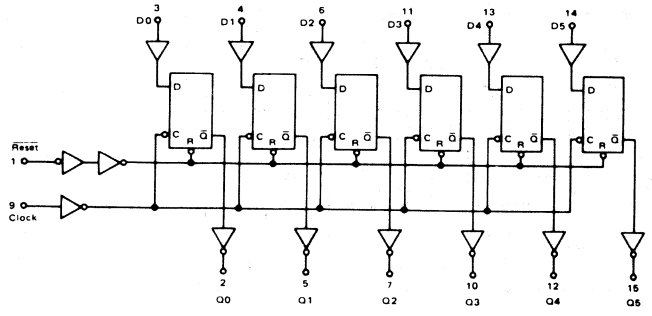

F400

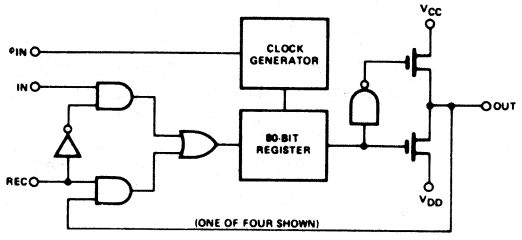

F401

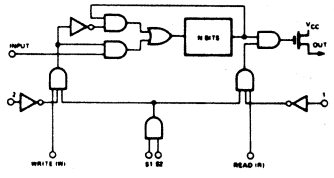

F402

See PN 14x and PN 14z

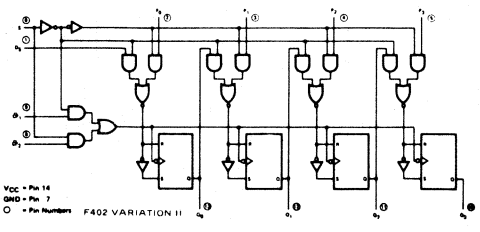

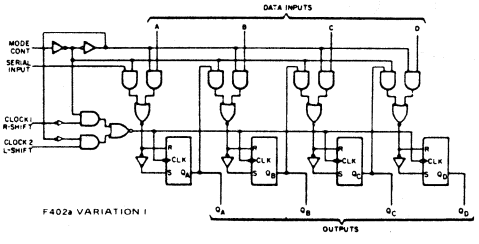

F403

F403 see PN14r

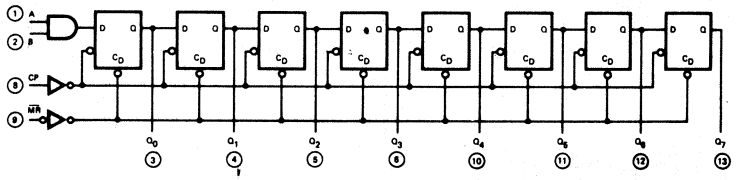

F404

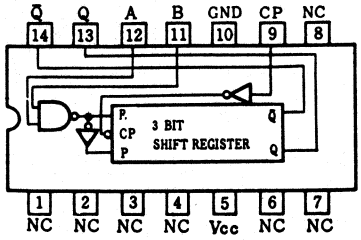

F405

F405 see PN 16et

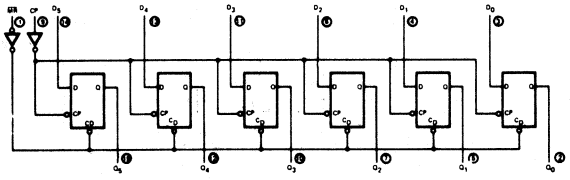

F406

F406 see PN 16eu

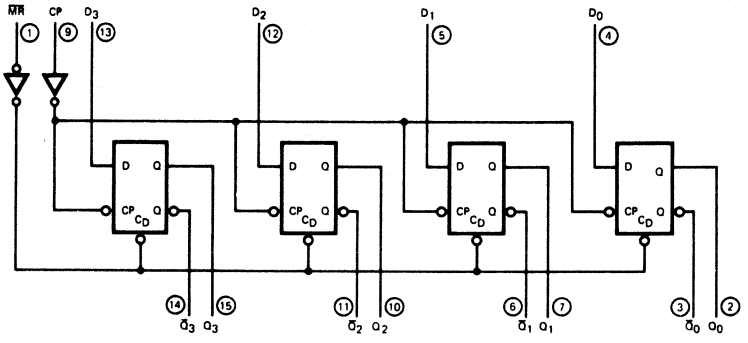

F408

F408 see PN 16ev

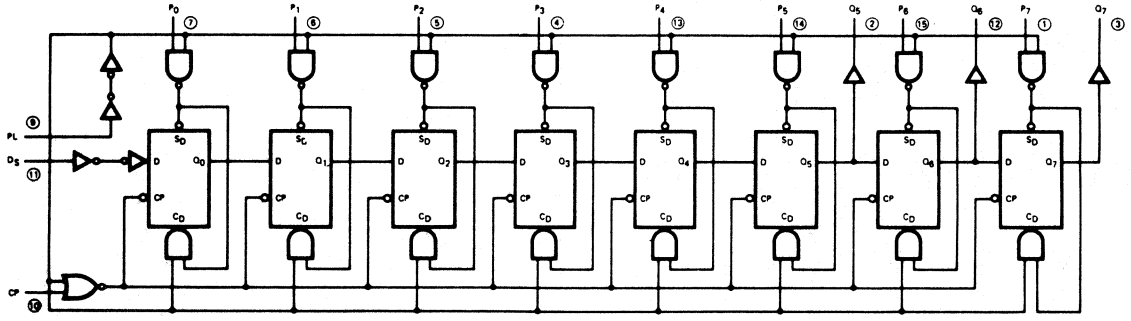

F409

F409 see PN 16ew

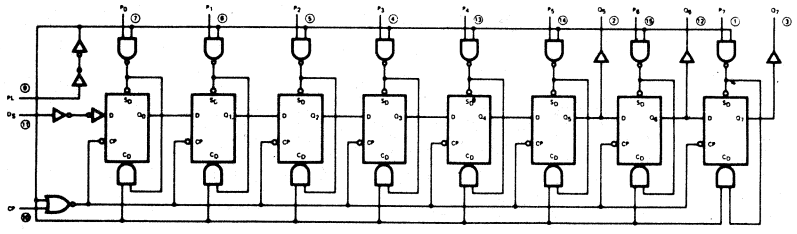

F410

F410 see PN 16ex

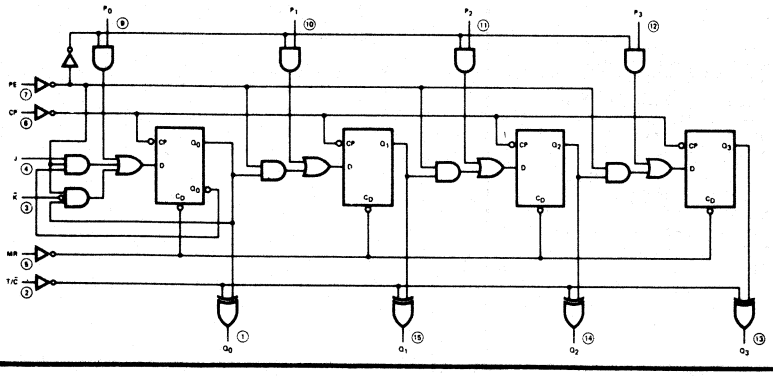

F411

F411 see PN 16ey

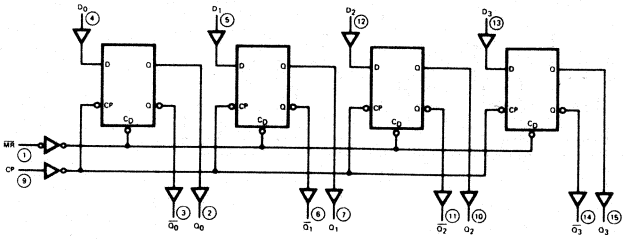

F412

F412 see PN16ez

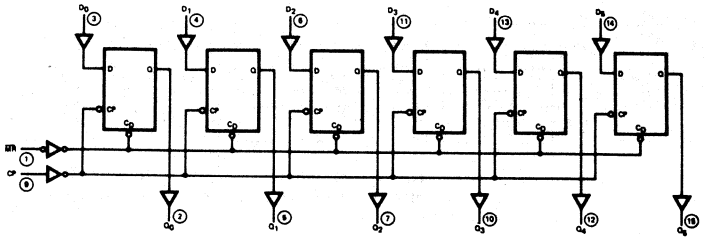

F413

F413 see PN 10h

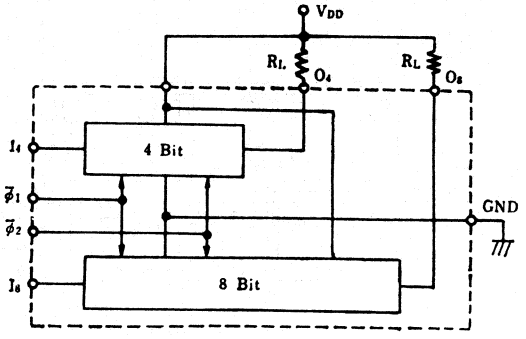

F414

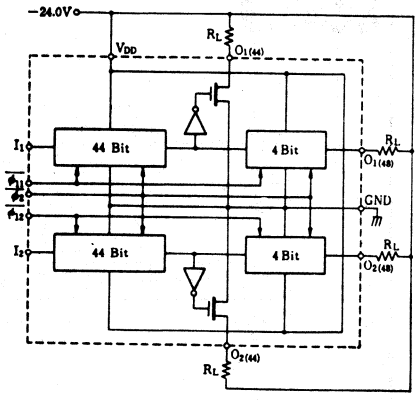

F414 see PN 14s

F415

F415 see PN 12a

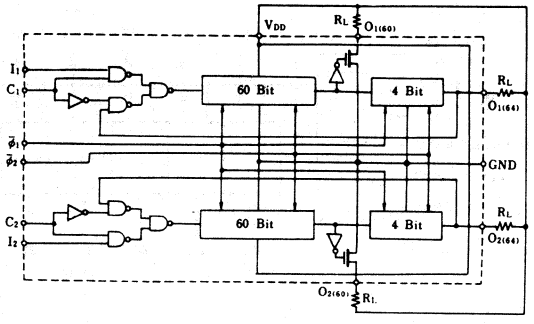

F416

F416 see PN14t

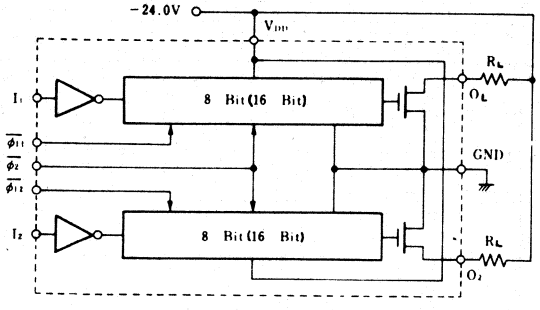

F417

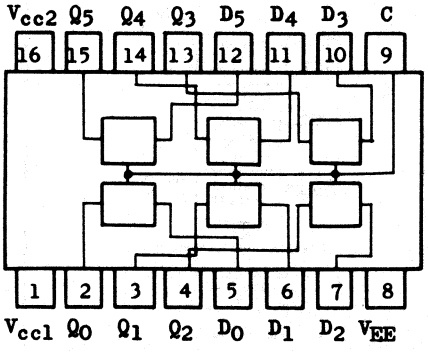

F418

F418 see PN 14u

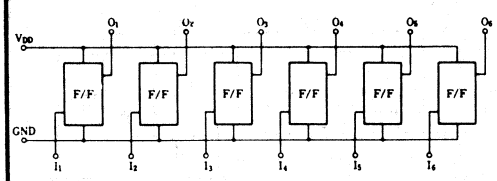

F420

F420 see PN14fa

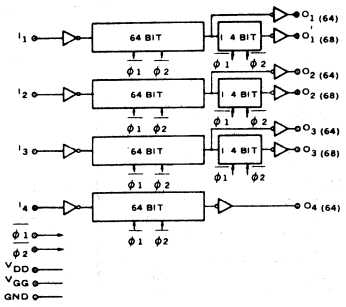

F421

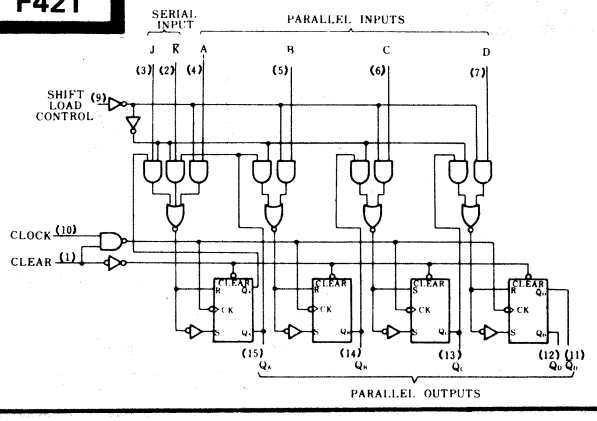

F422

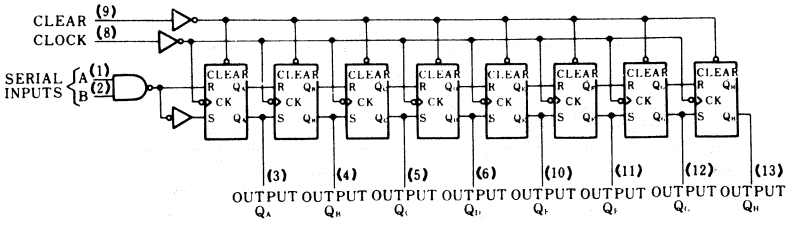

F423

F423 see PN 24ga

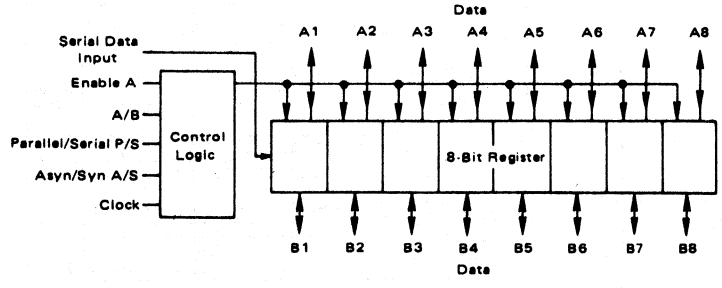

F424

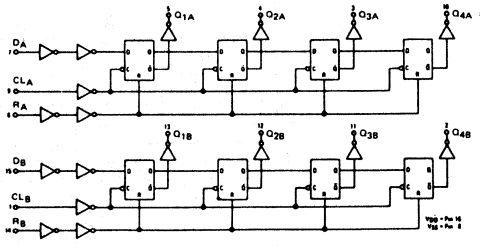

F425

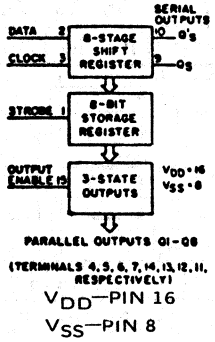

F427

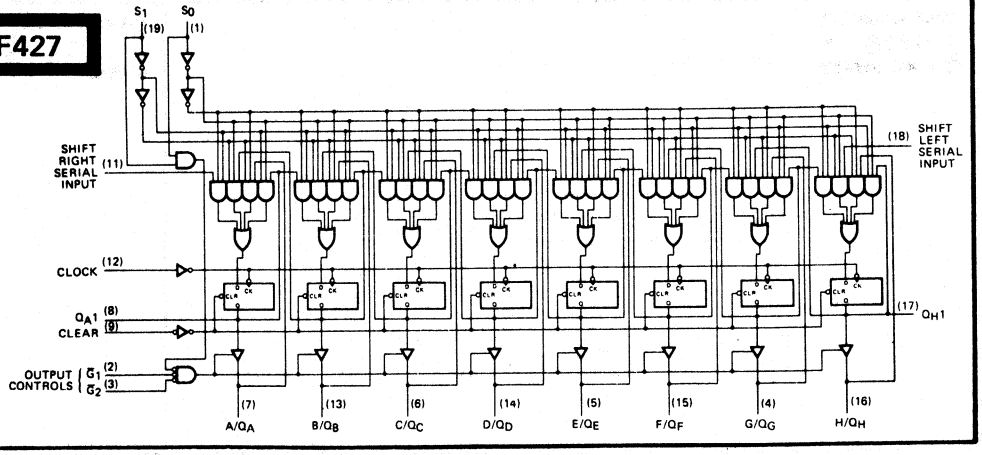

F428

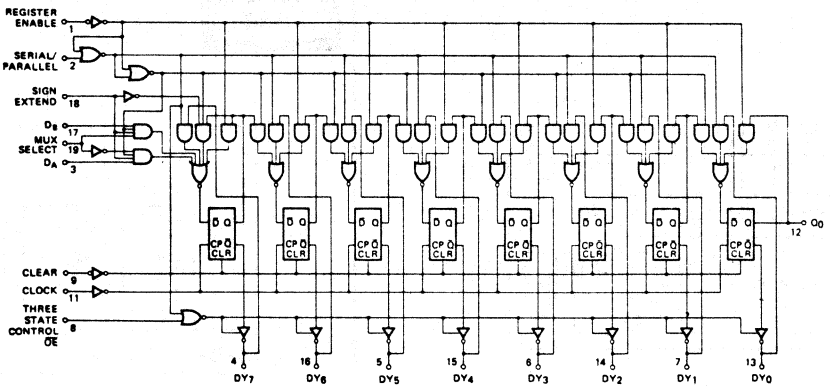

F429

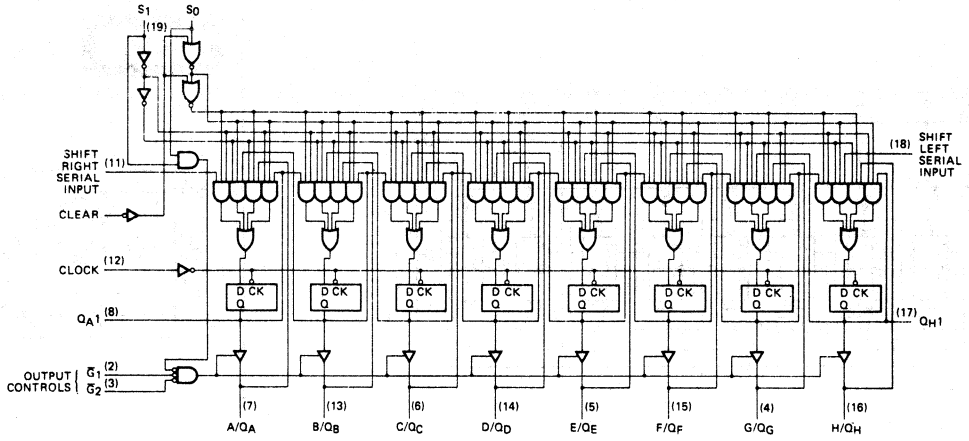

F430

F430 see PN 20u, PN20t

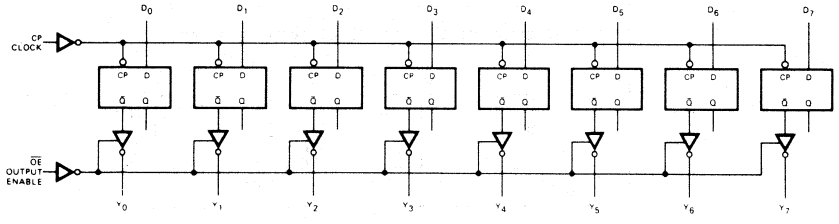

F431

F431 see PN20v

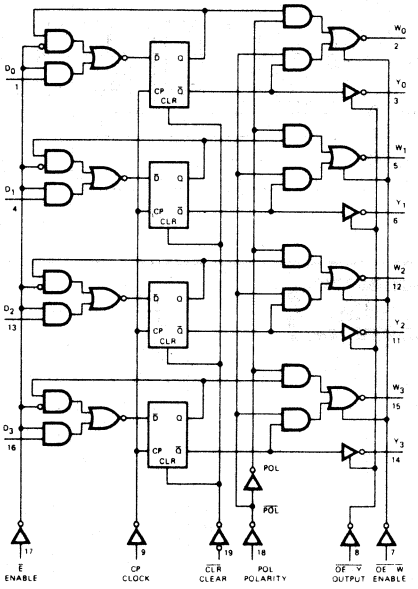

F432

F432 see PN 20w

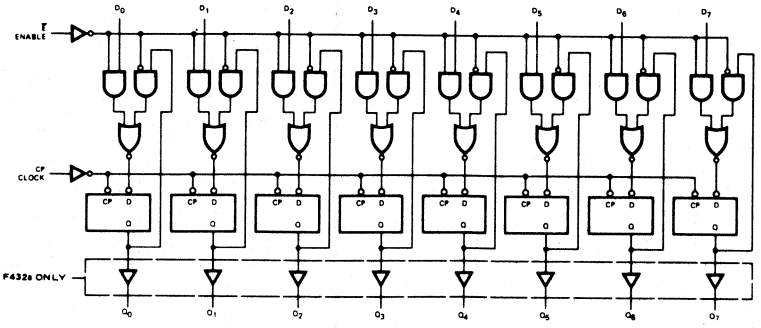

F433

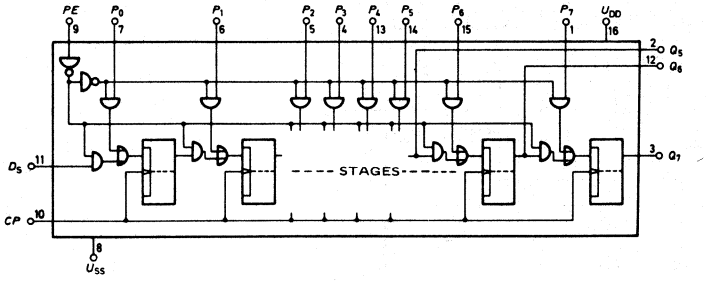

F434

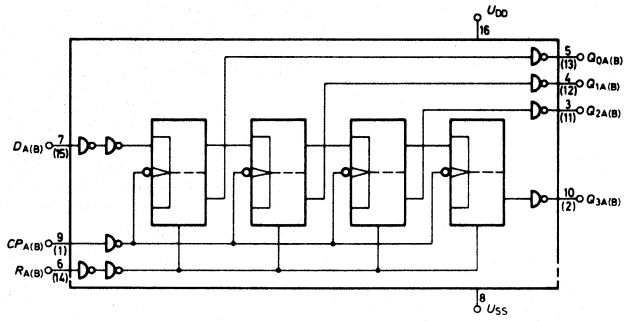

F435

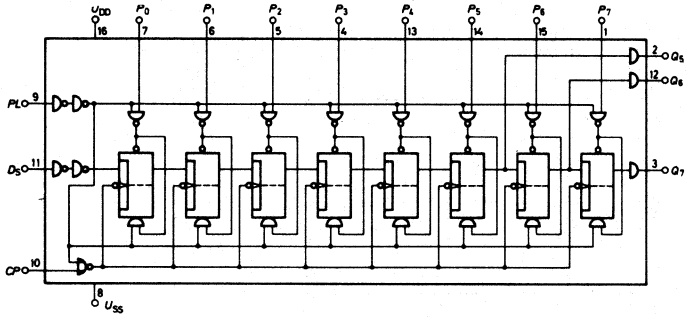

F436

F436 see PN 16fb

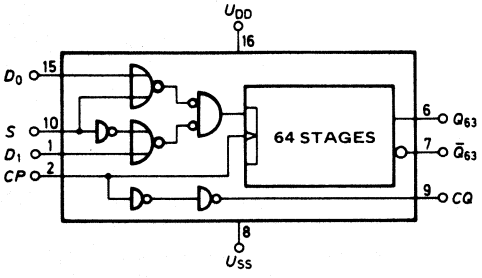

F437

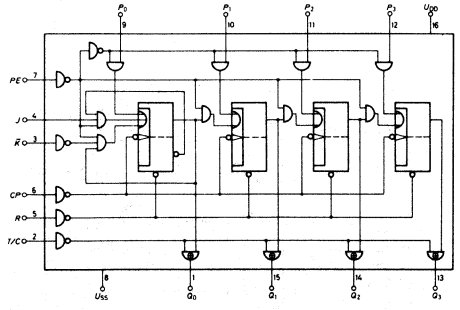

F438

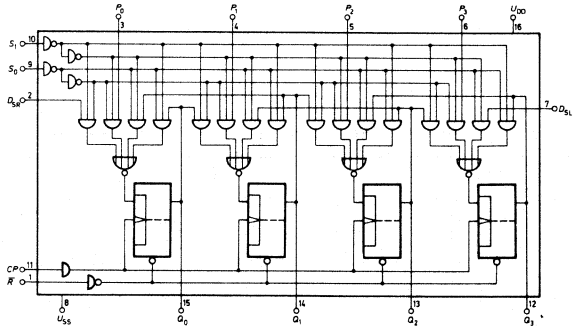

F439

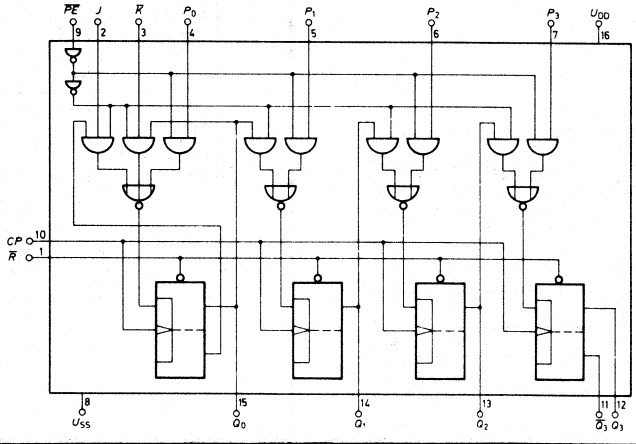

F440

F440 see PN 16fc

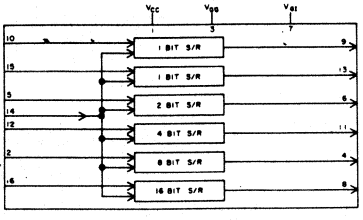

F441

F441 see PN 14v

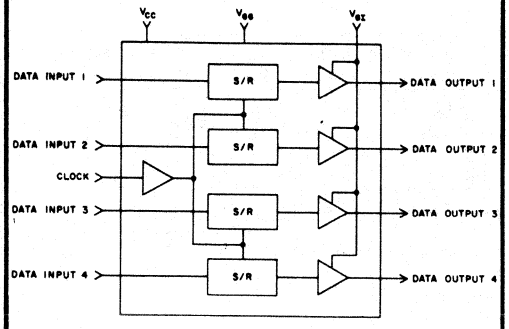

F442

F442 see PN 16fd,fe

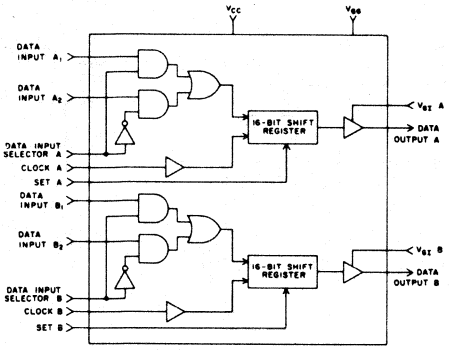

F449

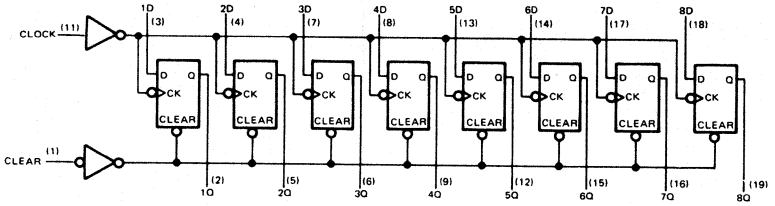

F450

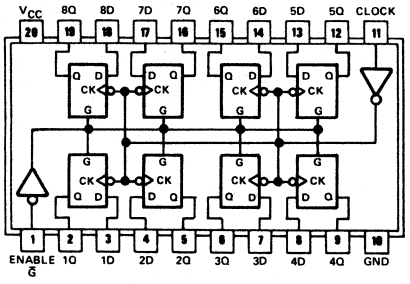

F451

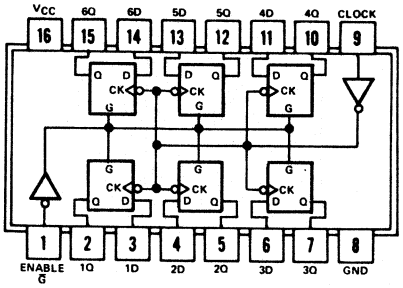

F452

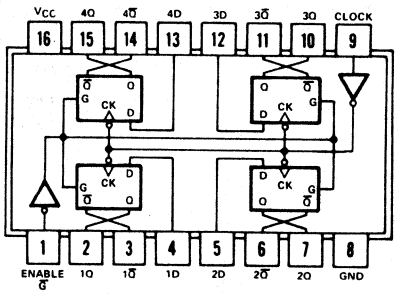

F457

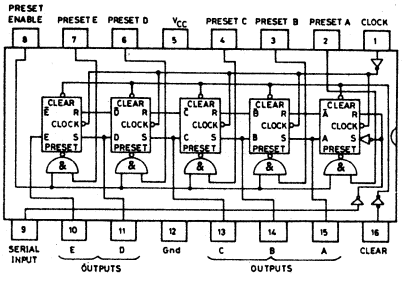

F462

F462 see PN 16fj

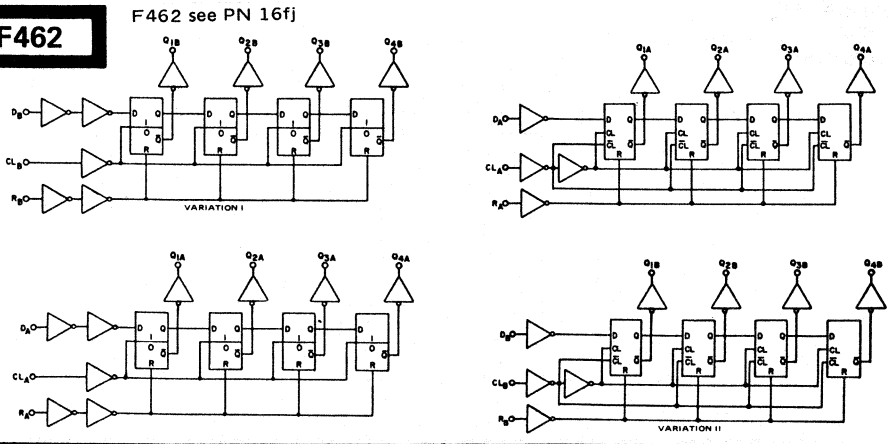

F463

F463 see PN 16di

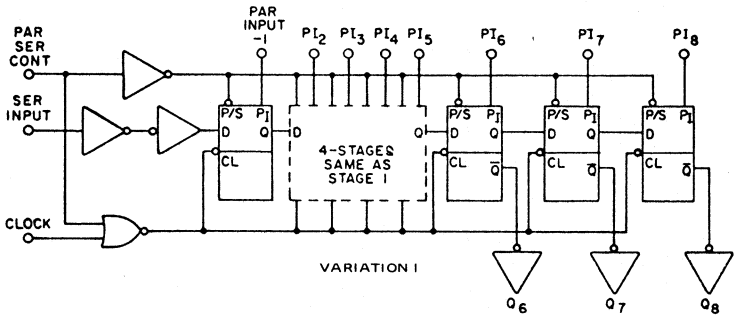

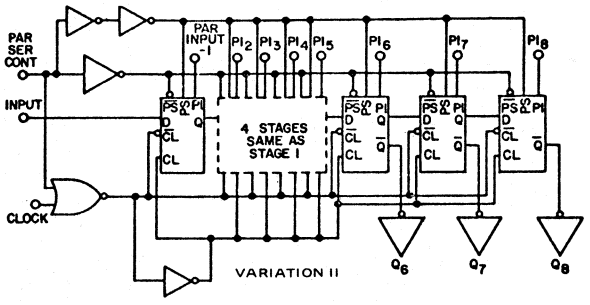

F465

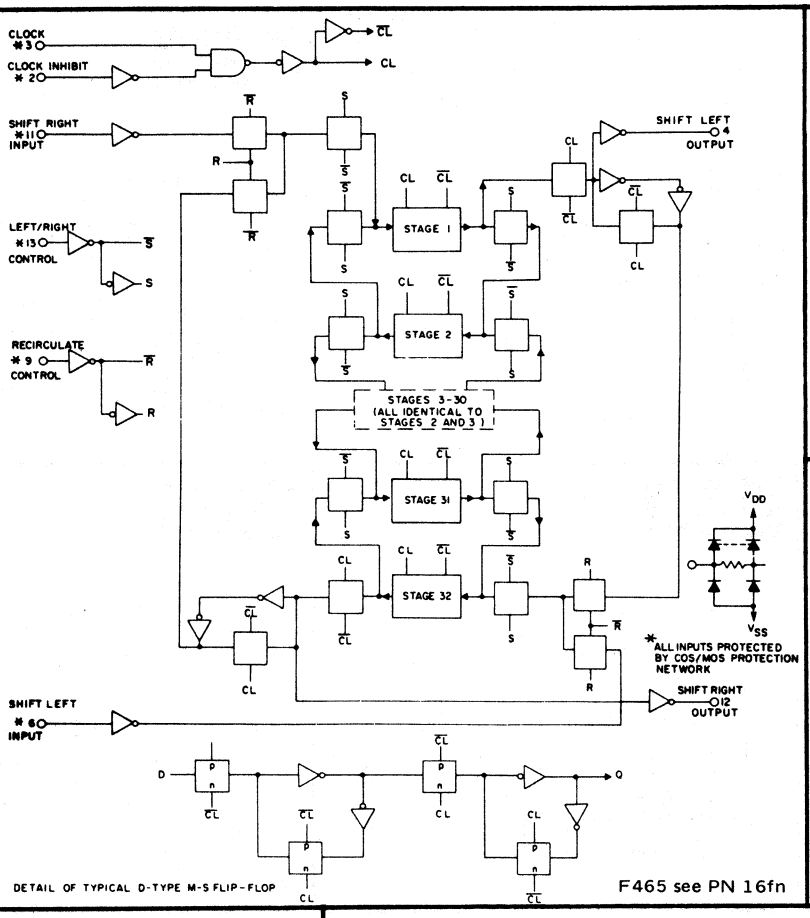

F465 see PN 16fn

F466

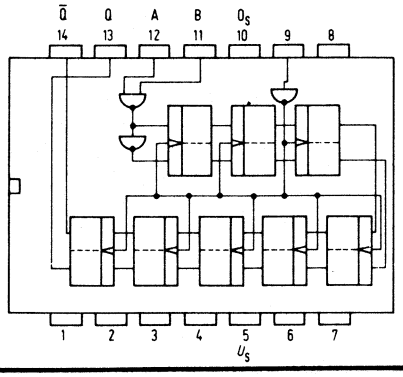

F467

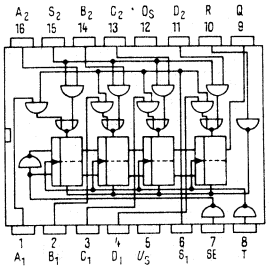

F468

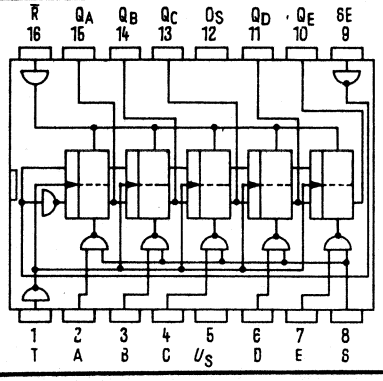

F469

F469 see PN 16bp

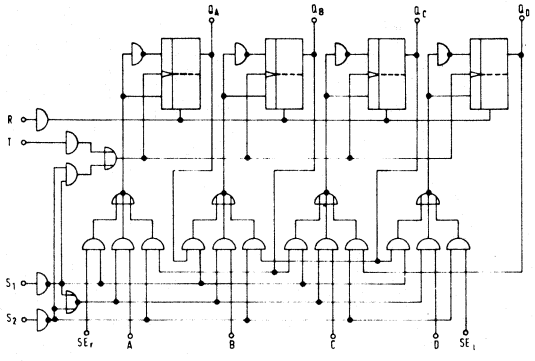

F471

F471 see PN 14ac

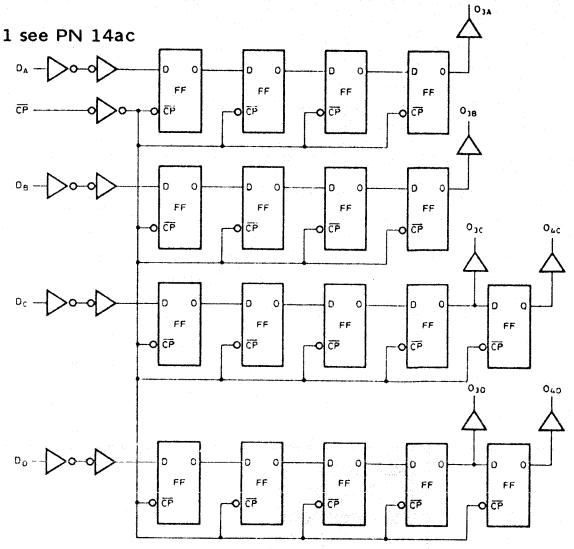

F472

F472 see PN 28x

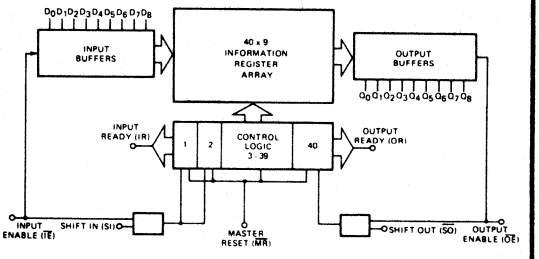

F477

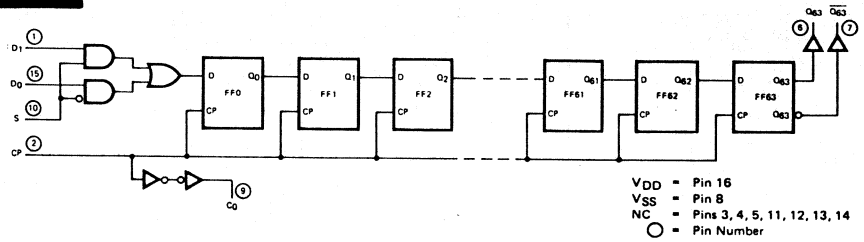

V_{DD} = Pin 16
V_{SS} = Pin 8
NC = Pins 3, 4, 5, 11, 12, 13, 14
○ = Pin Number

F478

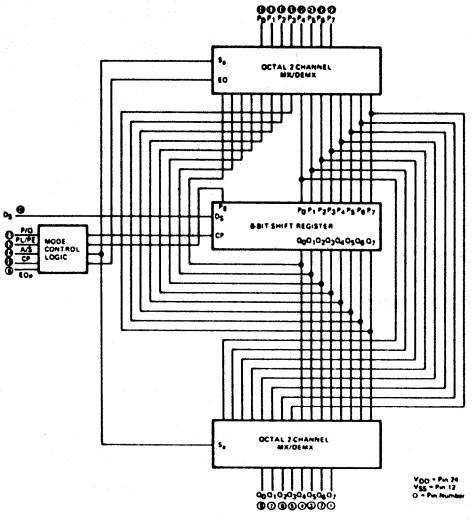

F480

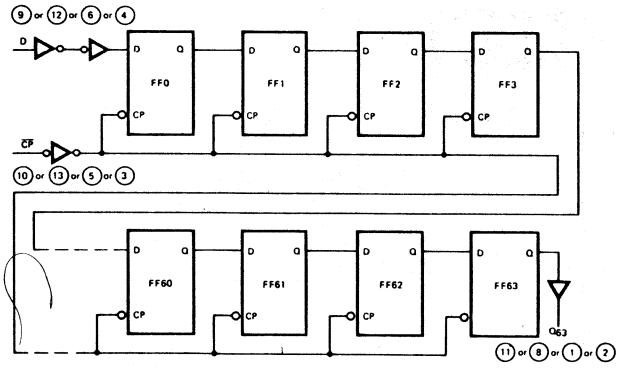

V_{DD} = Pin 14
V_{SS} = Pin 7
○ = Pin Number

F480 see PN 14aa, PN16fr

F482

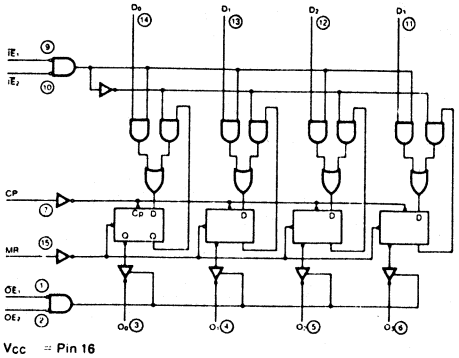

V_{CC} = Pin 16
GND = Pin 8
○ = Pin Numbers

F483

F483 see PN 16fs

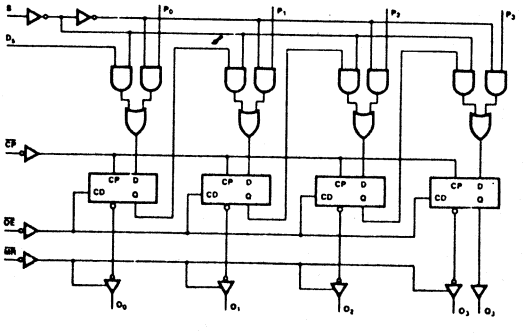

F484

F484 see PN 16 ft

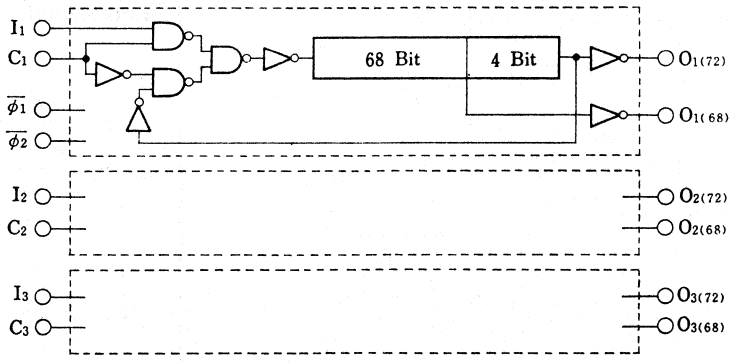

F485

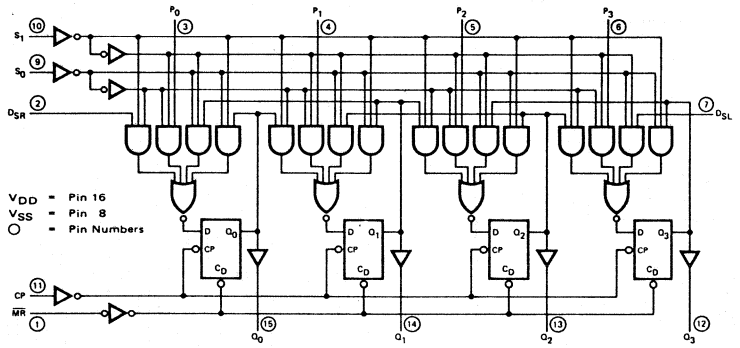

F486

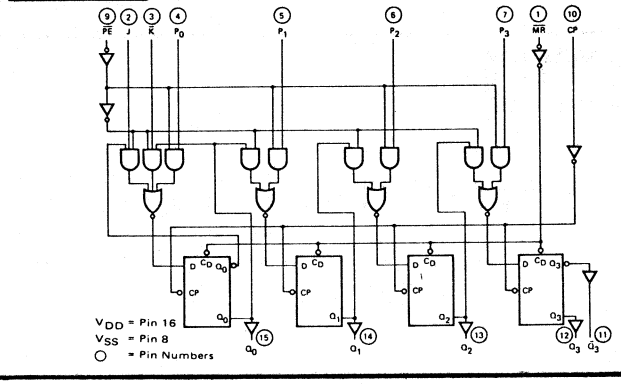

F487

F487 see PN 16fu

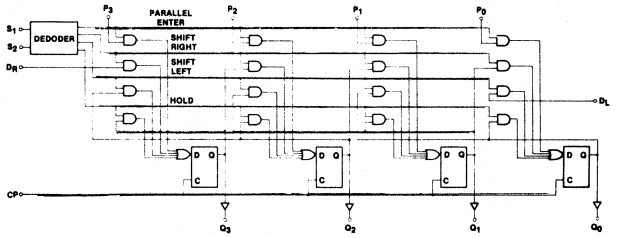

F488

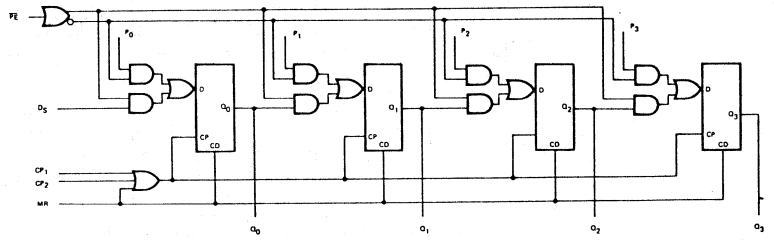

	CP1	CP2	MR	PE	P0	P1	P2	P3	Q0	Q1	Q2	Q3	DS	VCC1	VCC2	VEE
F488	13	14	12	5	7	9	10	11	3	2	15	14	6	1	16	8
F488a	1	8	16	9	11	13	14	15	7	6	3	2	10	5	4	12

F491

F491 see PN16gb

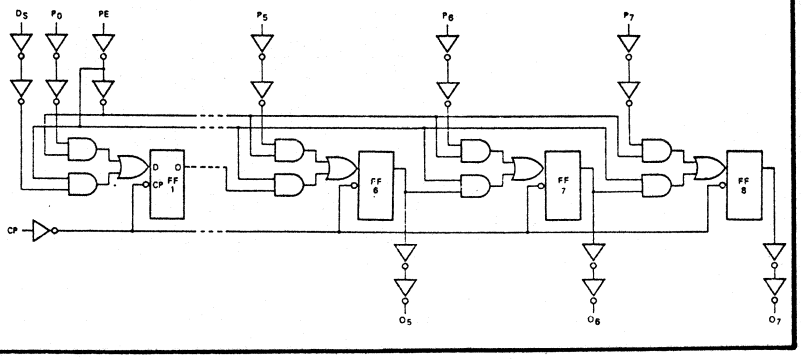

F492

F492 see PN 16fu

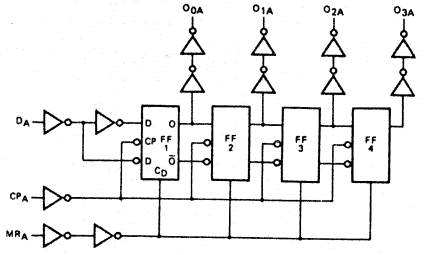

F493

F493 see PN 16gw

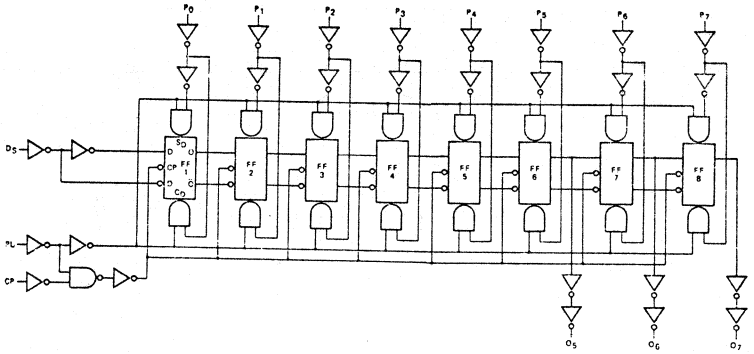

F494

F494 see PN 16fx

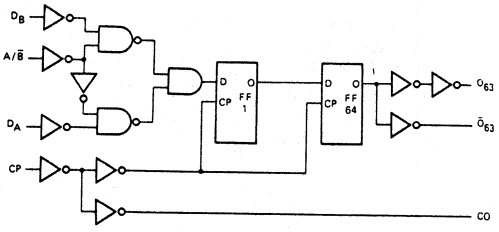

F496

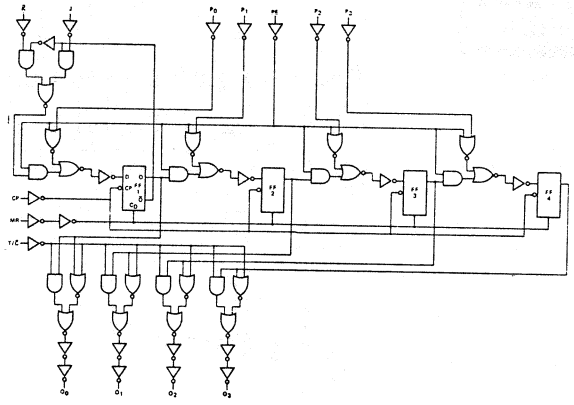

F496 see PN 16fz

F497

F497 see PN 16ga

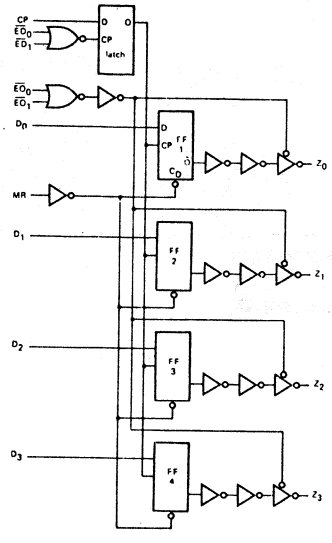

F498

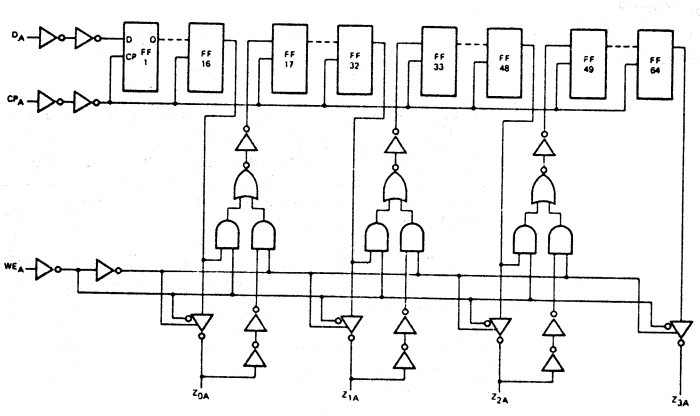

F498 see PN 16gb

22. LOGIC/BLOCK DRAWINGS

IN DRAWING NUMBER SEQUENCE

F500

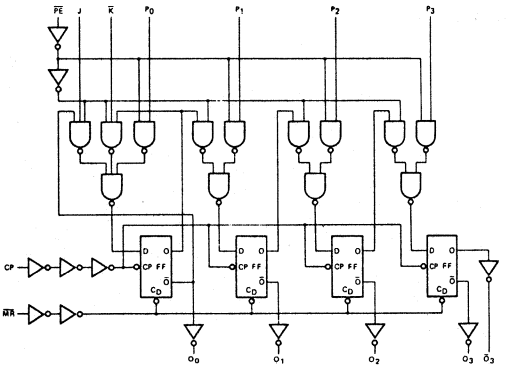

F500 see PN 16gc

F503

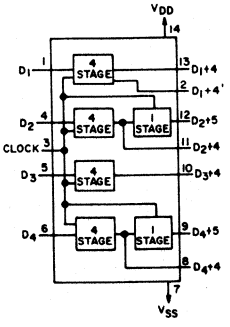

F504

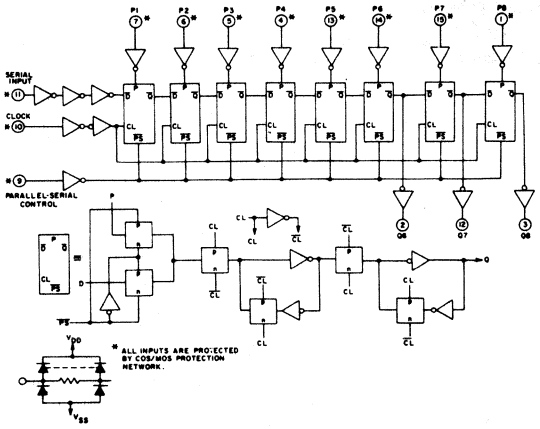

F505

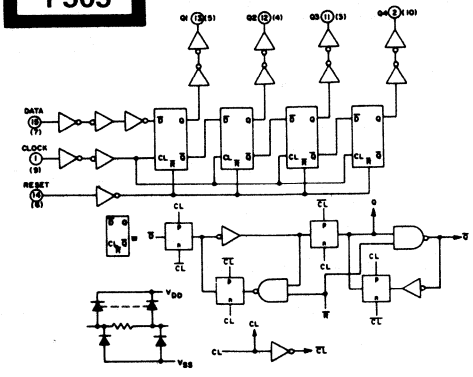

F506

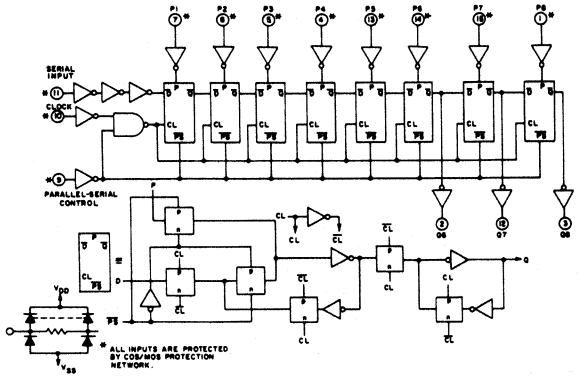

F507

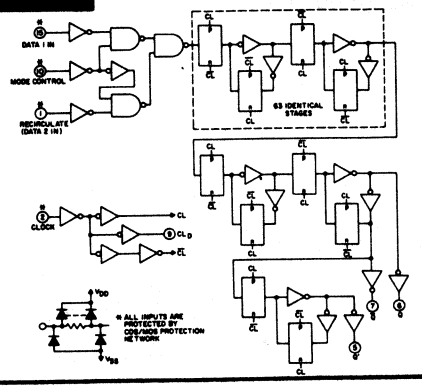

F508

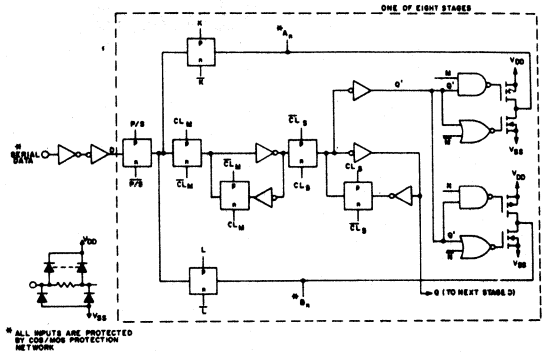

F509

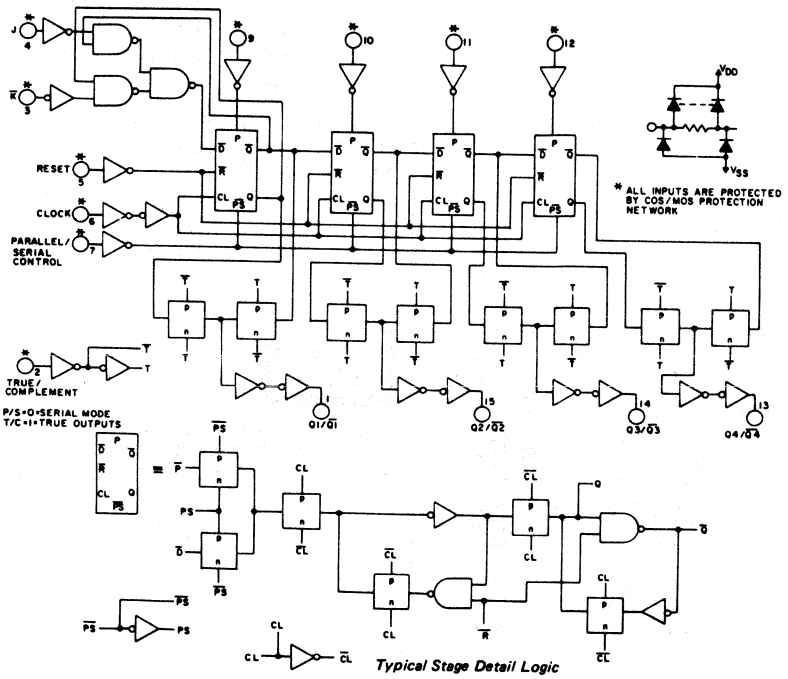

Typical Stage Detail Logic

F513

F513 see PN 16gz

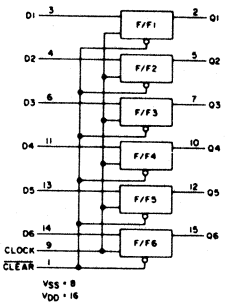

F514

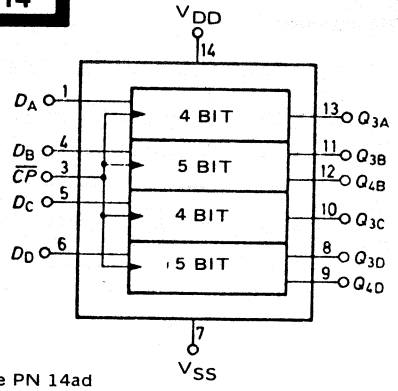

F514 see PN 14ad

F523

FUNCTION	CONNECTOR PINS		
	IC1	IC2	IC3
Q1	45	27	11
SD1	43	25	9
J1	47	29	13
CP1	48	30	14
$\overline{R}$1	50	32	16
CD1	49	31	15
$\overline{Q}$1	46	28	12
Q2	42	24	8
SD2	44	26	10
J2	41	23	7
CP2	39	21	5
K2	38	20	4
CD2	37	19	3
$\overline{Q}$2	40	22	6
Vcc	51		
GND	1		52

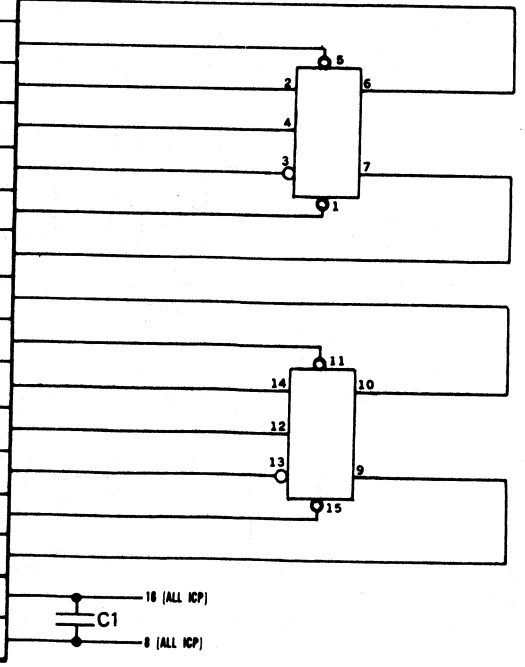

F519

F519 see PN 16gh

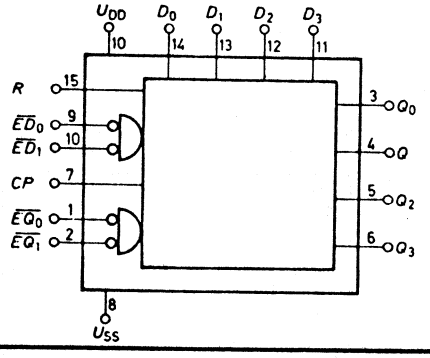

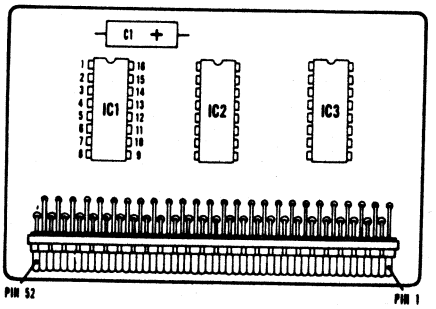

F524

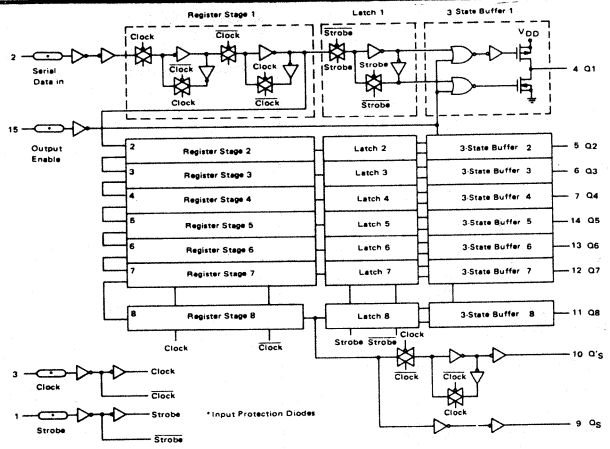

F526

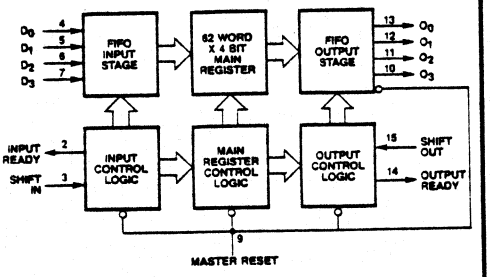

F527

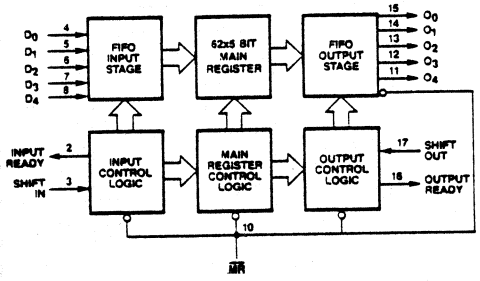

F531

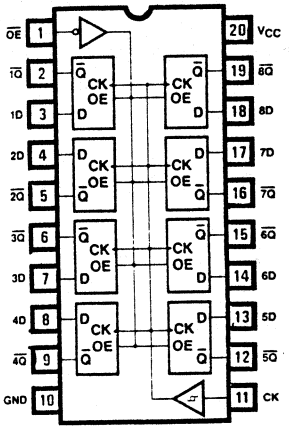

F532

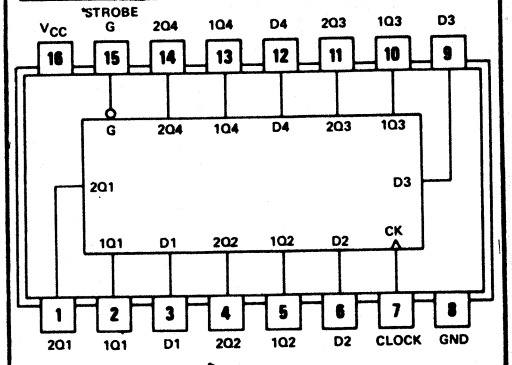

F535

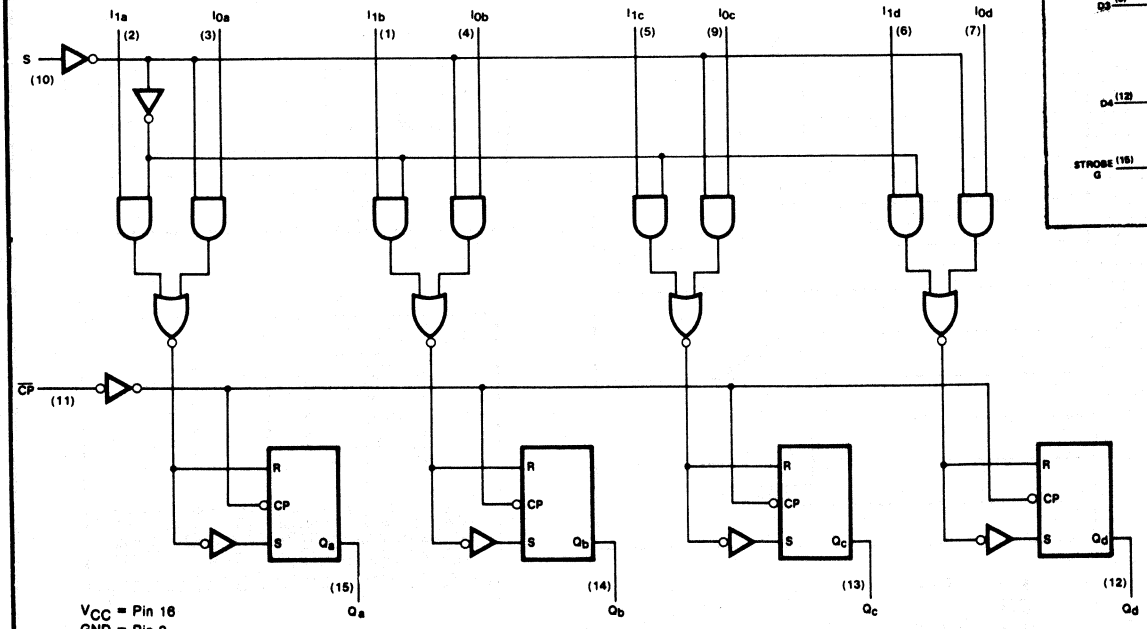

V_{CC} = Pin 16
GND = Pin 8
( ) = Pin numbers

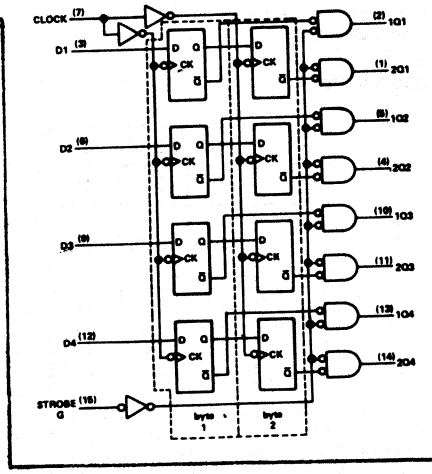

F536

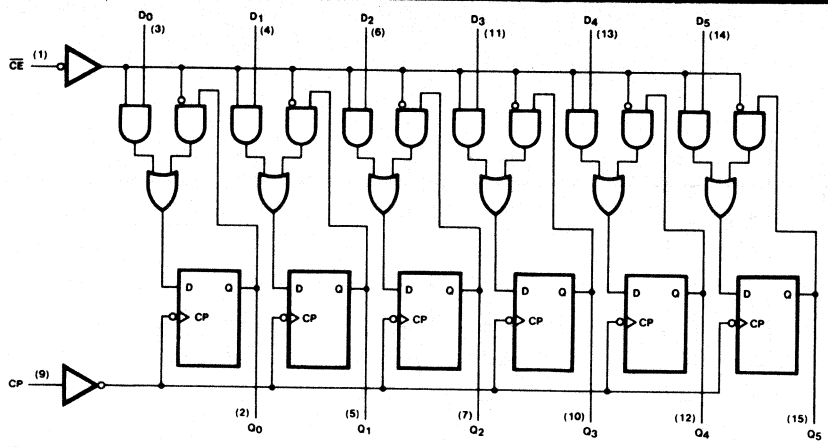

V_{CC} = Pin 16
GND = Pin 8
( ) = Pin numbers

F537

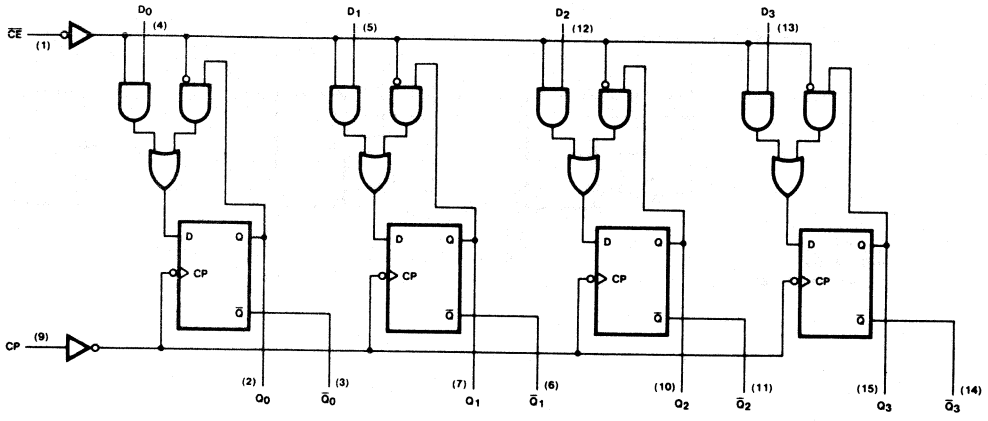

V_{CC} = Pin 16
GND = Pin 8
( ) = Pin numbers

F538

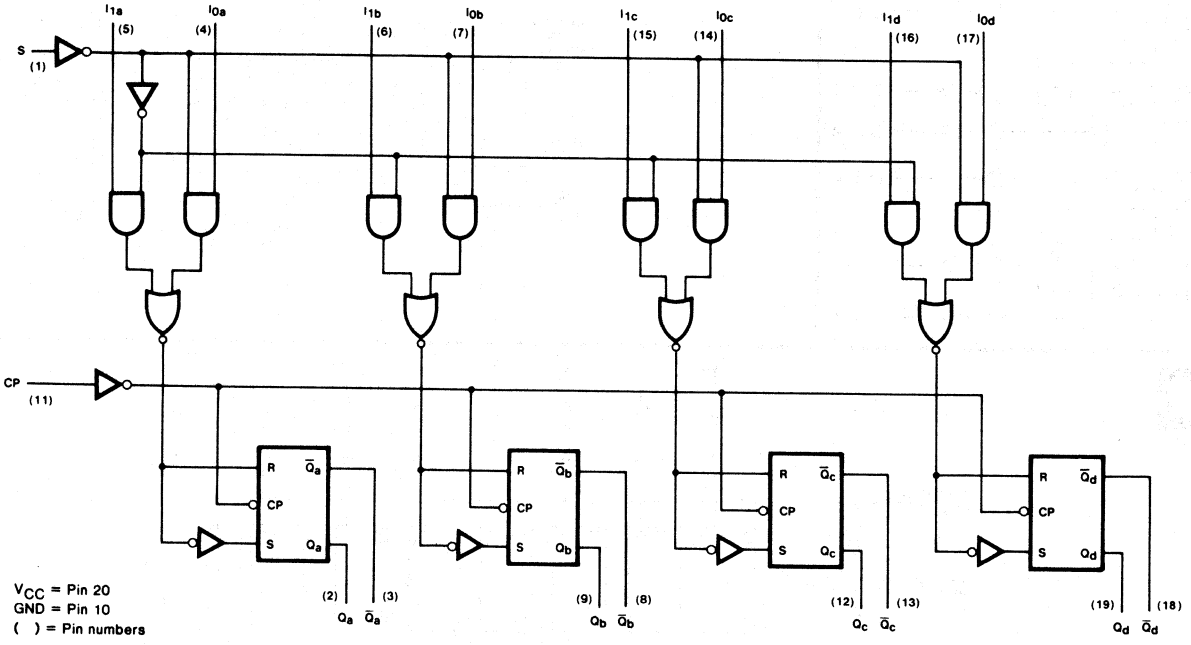

V_{CC} = Pin 20
GND = Pin 10
( ) = Pin numbers

F539

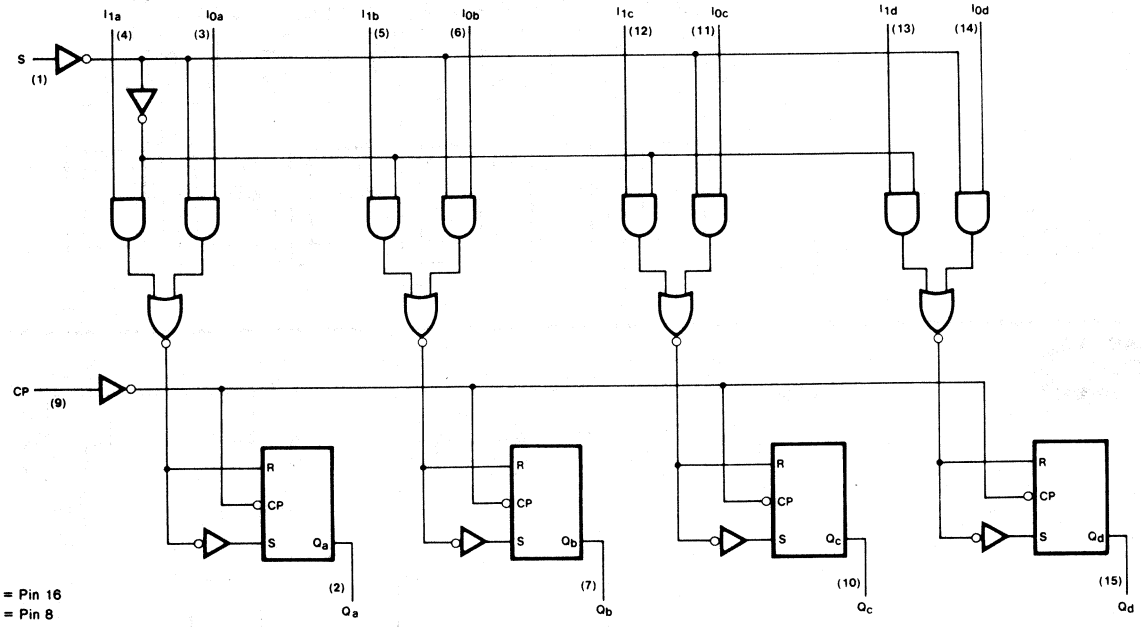

V_{CC} = Pin 16
GND = Pin 8
( ) = Pin numbers

F540

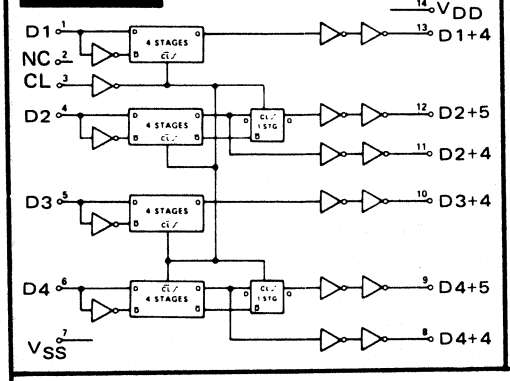

F541

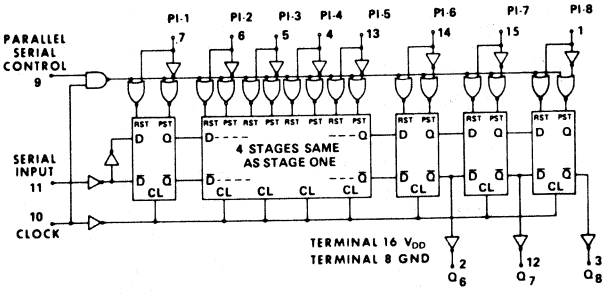

F542

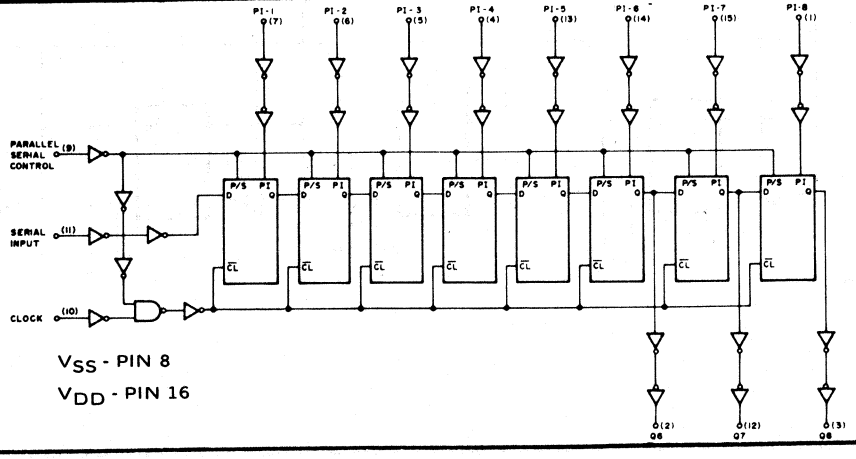

V_{SS} - PIN 8
V_{DD} - PIN 16

F543

F543 see PN 16gj, 16gh

(One Flip-flop shown)

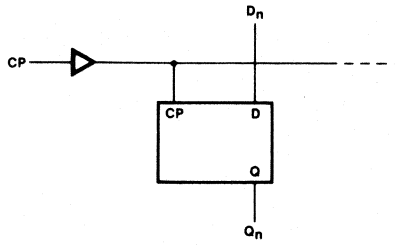

F544

F544 see PN 16gj,gh

(One Flip-flop)

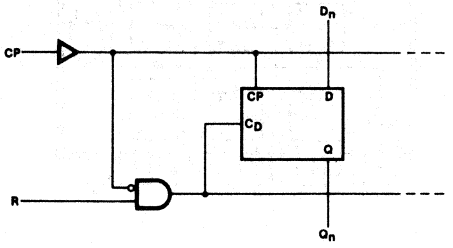

F546

F546 see PN8F557 see PN 22bd

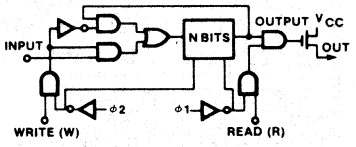

F546: N=512
F546a: N=1024

F545

F545 see PN 24gh,gi

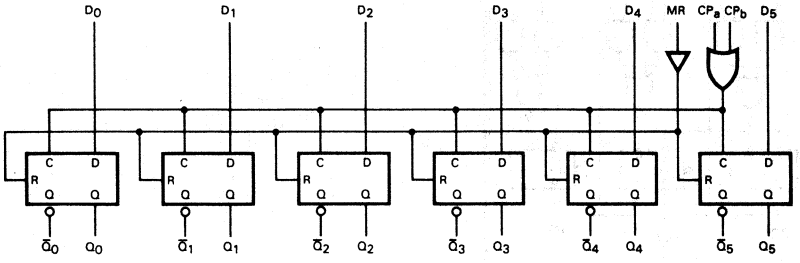

F547

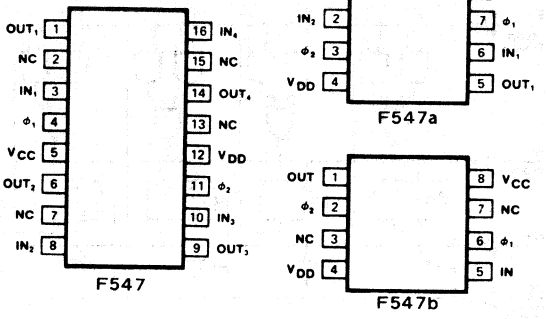

F549

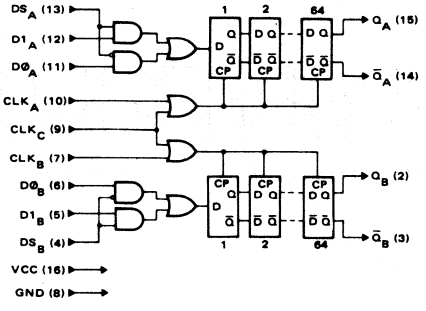

F550

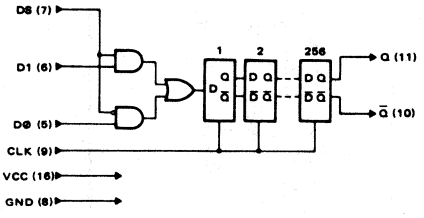

F553

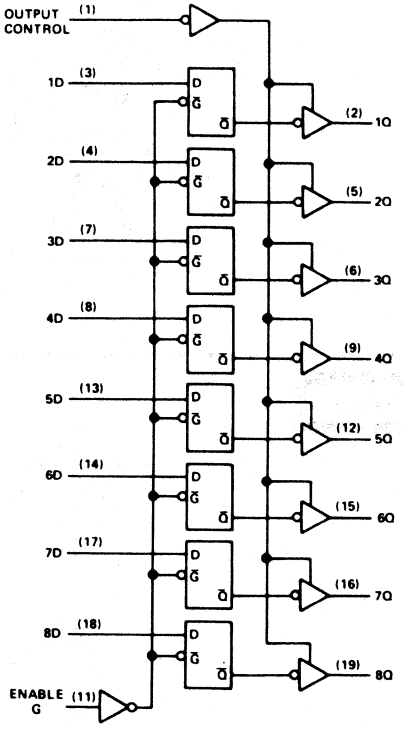

F551

* F551a HAS A 62x4 STACK

VCC = Pin 24
GND = Pin 12

○ = Pin Numbers

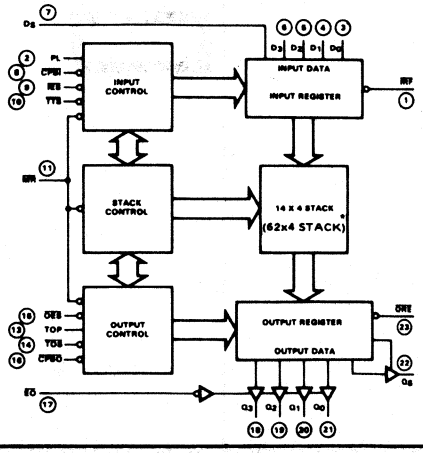

F554

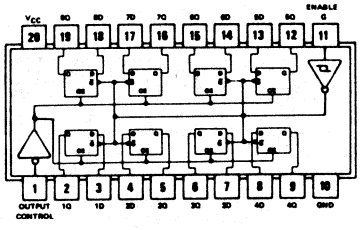

F555

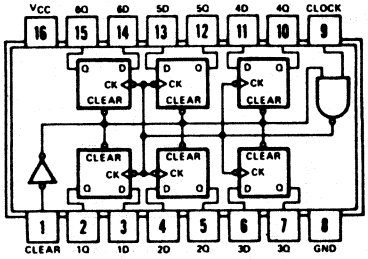

F557

F557 See PN 22bd

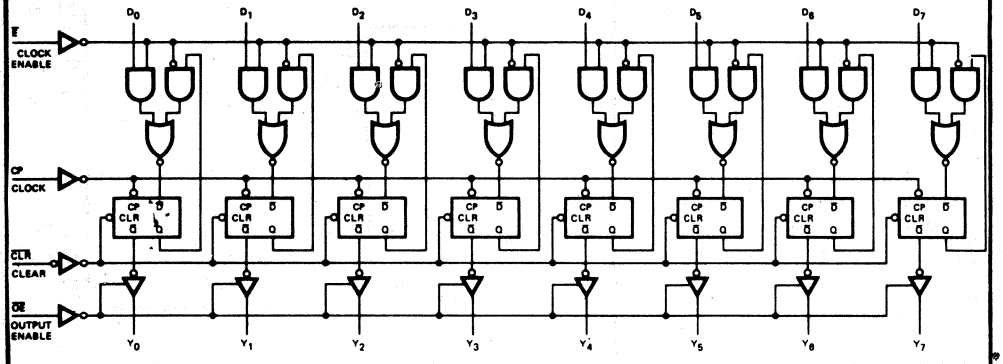

F558

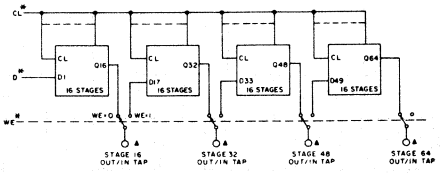

F559

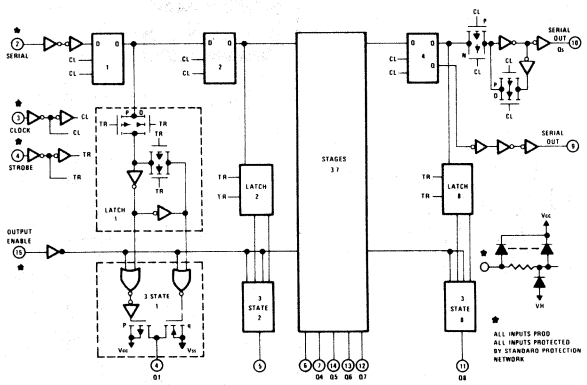

F560

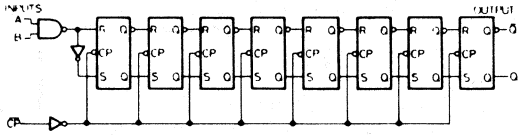

F561

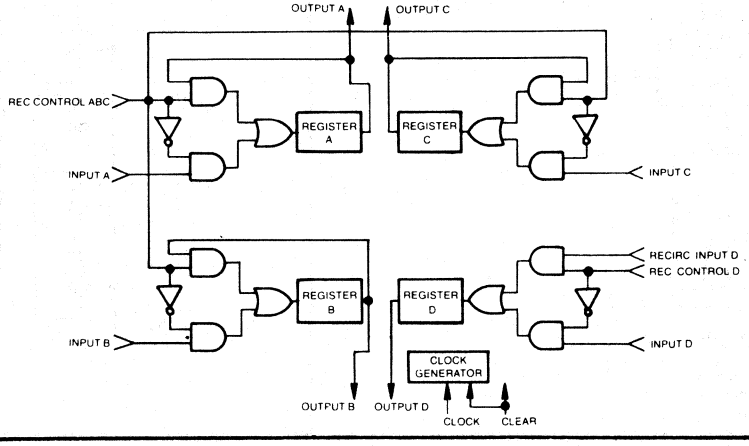

F562

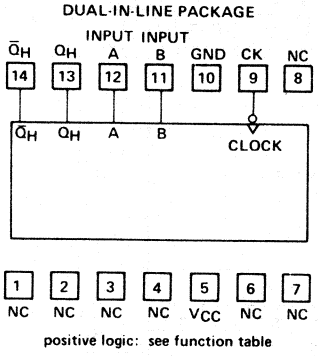

positive logic: see function table

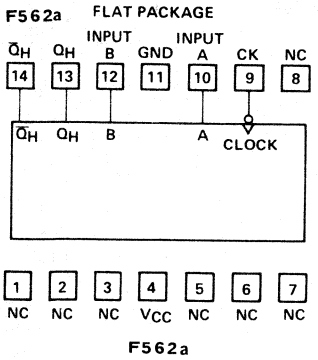

F562a

F563

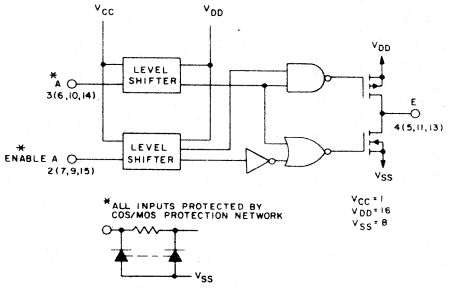

F564

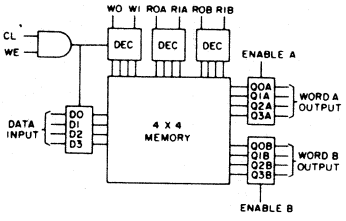

F565

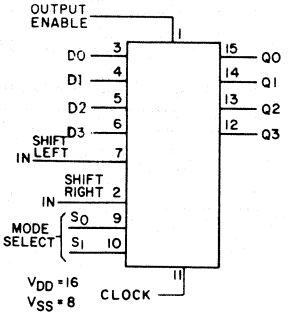

F566

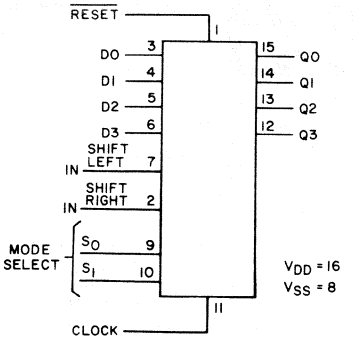

F567

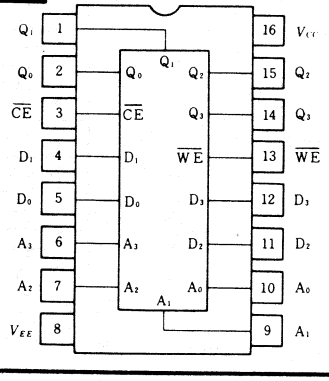

F568

SEE PN 24jm — DIP
or PN 24jn — FP

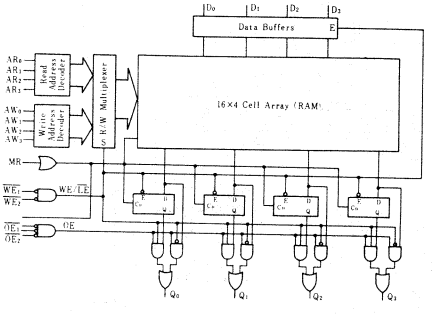

F569

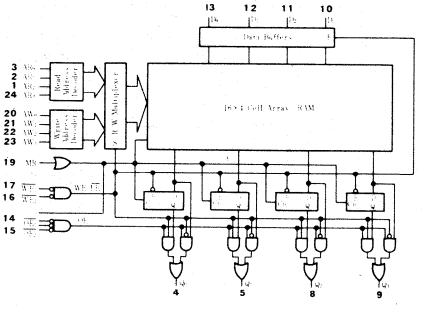

22. LOGIC/BLOCK DRAWINGS

IN DRAWING NUMBER SEQUENCE

Z4

Z4 see PN 24gj

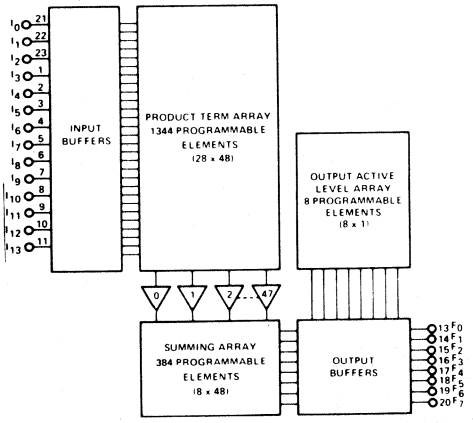

Z12

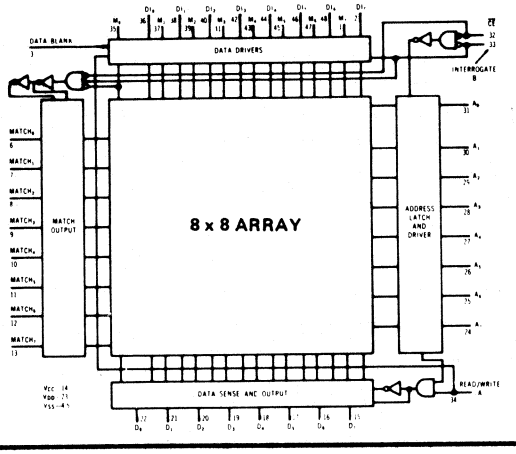

Z15

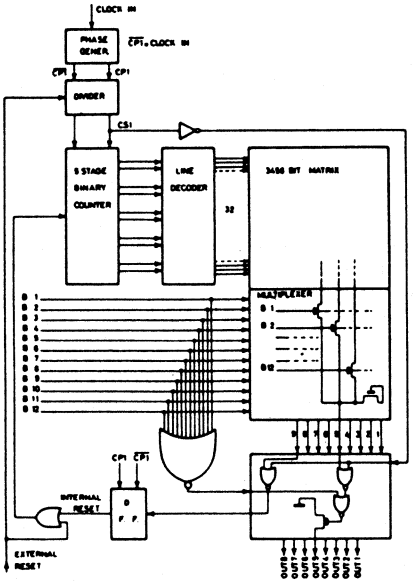

Z16

Z16 see PN 16go

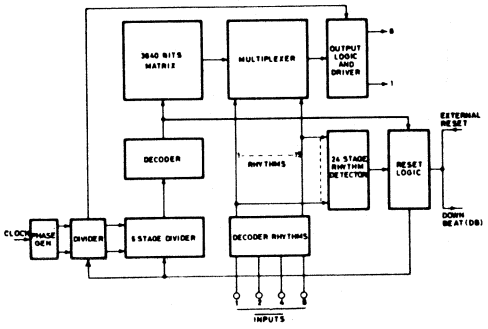

Standard content configuration

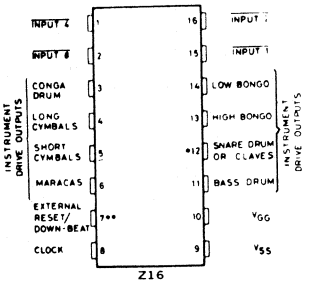

Z18

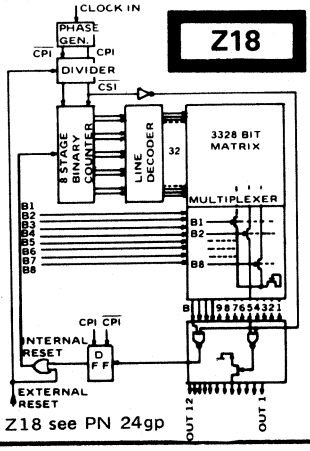

Z18 see PN 24gp

Z19

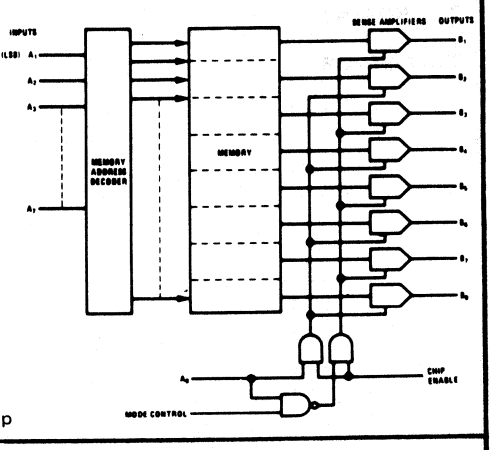

Z19 see PN24gp

Z17

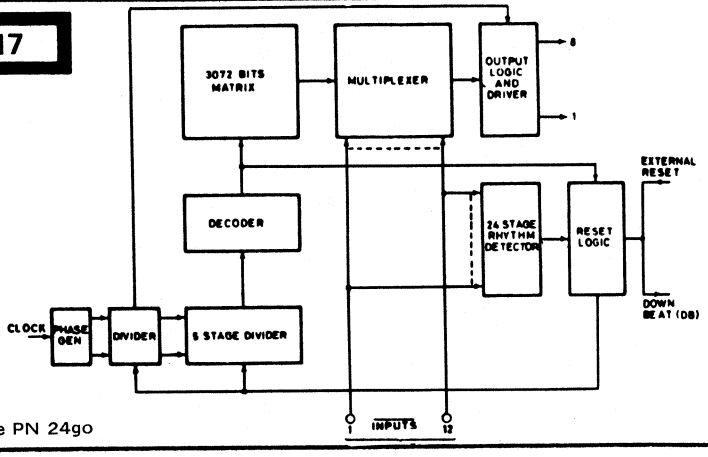

Z17 see PN 24go

Standard content configuration

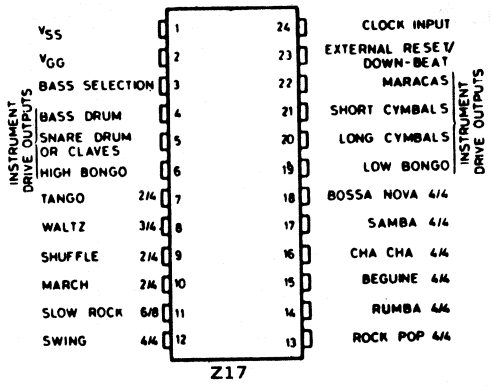

Z21

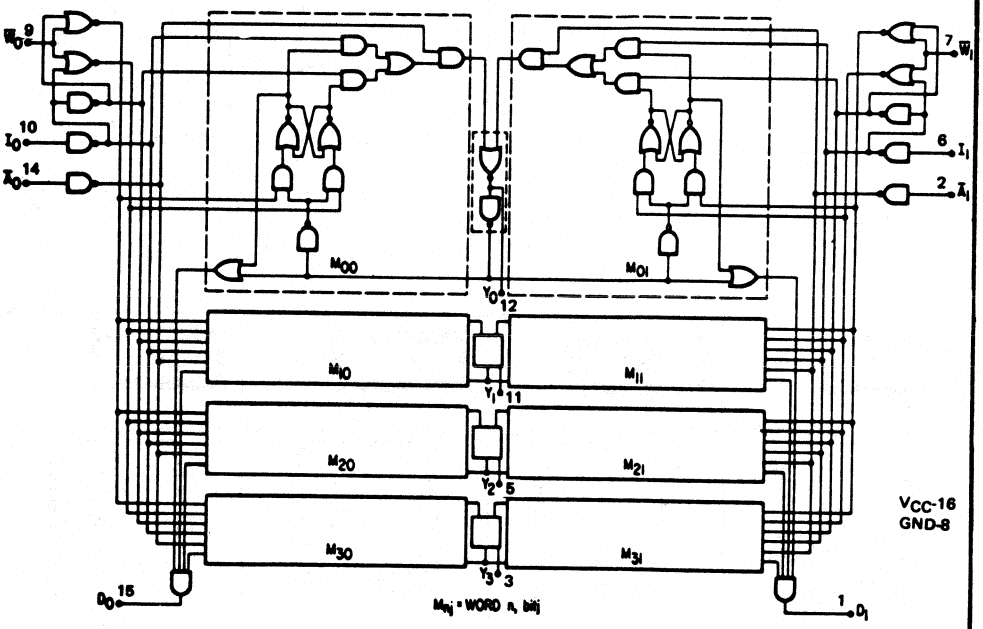

Z22

Z22 see PN 40h

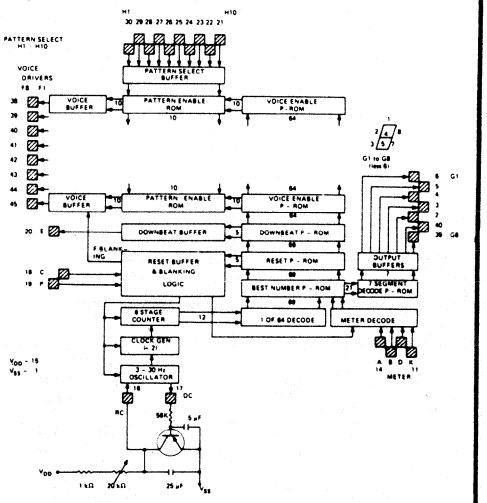

Z24

Z24 see PN 28y

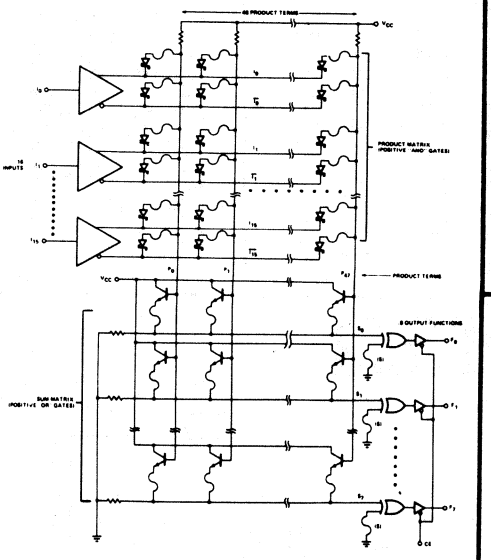

Z26

Z26 see PN8v

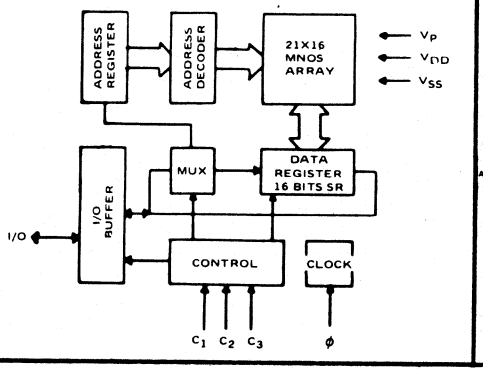

Z28

Z28 see PN28z

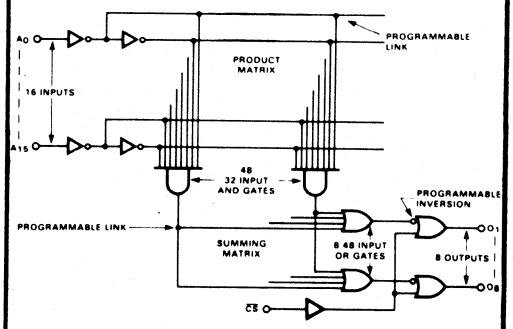

Z32

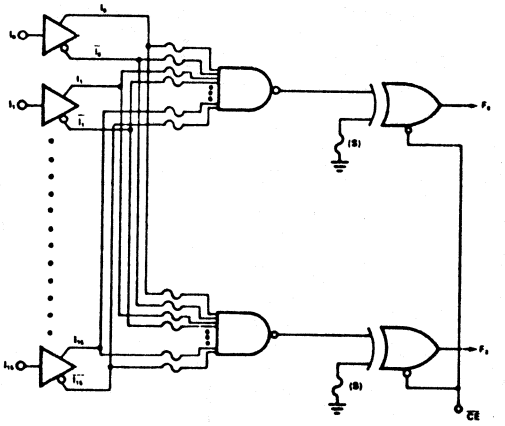

Z32 see PN 28aa

Z33

Z33 see PN 24gs

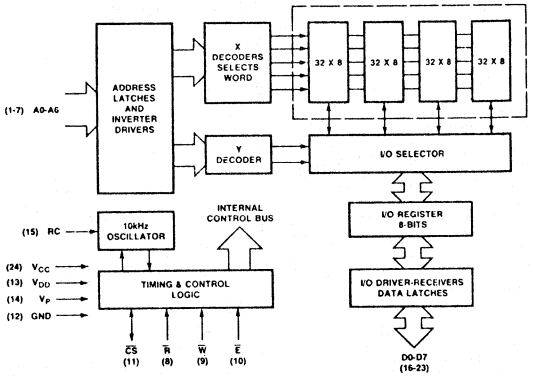

Z36

Z36 see PN 20y

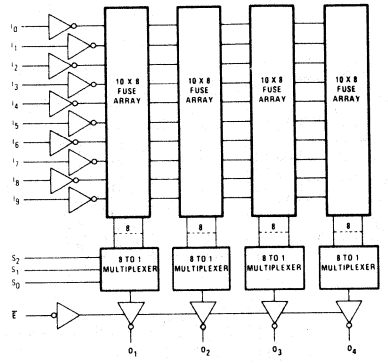

Z37

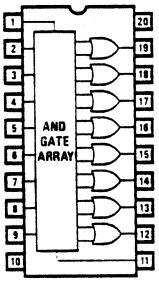

Z38

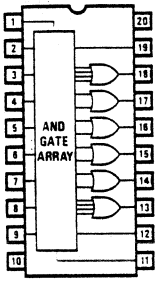

Z39

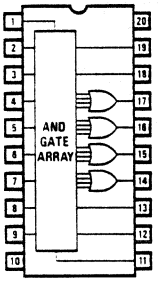

Z40

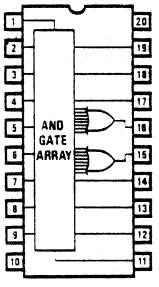

Z41

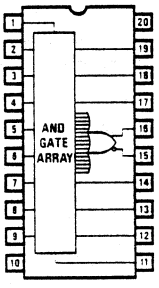

Z42

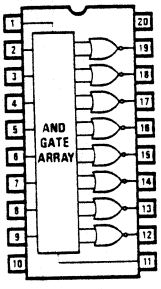

Z43

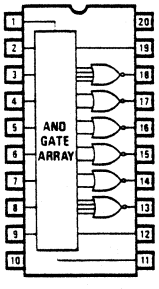

Z44

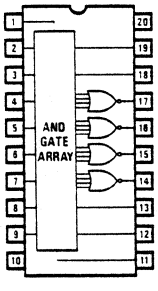

Z45

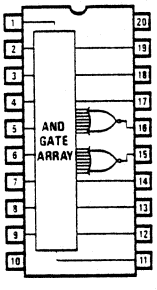

Z46

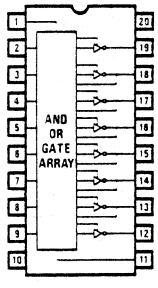

Z47

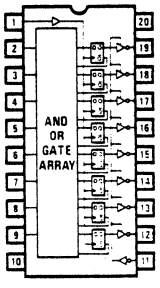

Z48

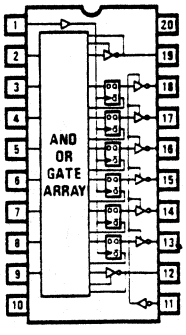

Z49

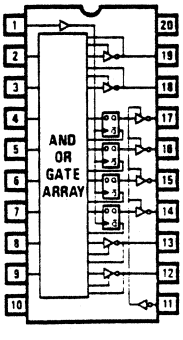

Z50

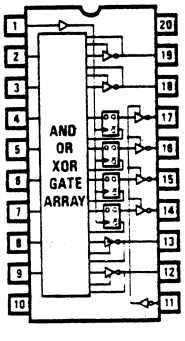

Z51

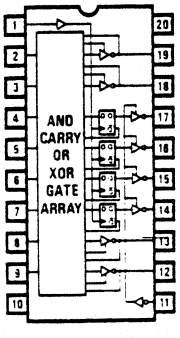

Z53

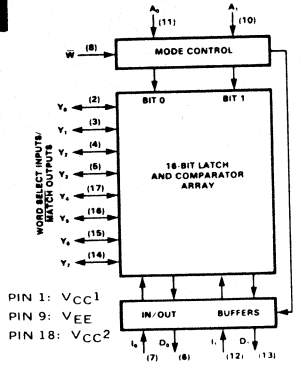

PIN 1: $V_{CC}1$
PIN 9: V_{EE}
PIN 18: $V_{CC}2$

CH

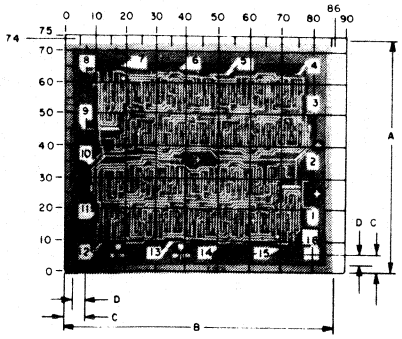

DICE TABLE

Drawing Number	Number of Connections	Width (A)		Length (B)		Chip Thickness	
		Mils	mm	Mils	mm	Mils	mm
1	14	61-69	1.550-1.752	79-87	2.007-2.209	5-9	0.127-0.228
2	16	79-87	2.007-2.209	81-89	2.058-2/260	5-9	0.127-0.228
3	16	69-77	1.753-1.955	66-74	1.677-1.879	5-9	0.127-0.228
4	24	97-105	2.464-2.667	111-119	2.820-3.022	5-9	0.127-0.228
5	16	92-100	2.337-2.540	102-110	2.591-2.794	5-9	0.127-0.228
6	16	71-79	1.804-2.006	83-91	1.194-1.399	5-9	0.127-0.228
7	16	87-95	2.210-2.413	96-104	2.439-2.641		
8	16	70-78	1.778-1.981	60-68	1.524-1.727		
9	16	69-77	1.753-1.955	82-90	2.083-2.286		
10	16	108-116	2.744-2.996	137-145	3.480-3.683		
11	16	143-151	3.633-3.835	161-169	4.090-4.292		
12	16	87-95	2.210-2.403	107-115	2.717-2.921		
13	24	114-122	2.896-3.098	126-134	3.200-3.403		
14	16	100-108	2.540-2.743	123-131	3.125-3.327		
15	**16**	**72-80**	**1.829-2.032**	**76-84**	**1.931-2.133**		
16	**16**	**92-100**	**2.337-2.540**	**94-102**	**2.388-2.591**		
17	**16**	**80-88**	**2.032-2.235**	**91-99**	**2.312-2.514**		
18	**16**	**87-95**	**2.210-2.413**	**136-144**	**3.455-3.657**		
19	**24**	**99-107**	**2.515-2.717**	**149-157**	**3.785-3.987**		
20	**16**	**83-91**	**2.109-2.311**	**89-97**	**2.261-2.463**		

Dimensions C - 4-10 mils 0.102-0.254mm
D - 3.3-4.3 mils 0.084-0.109mm unless otherwise noted

22. LOGIC/BLOCK DRAWINGS

IN DRAWING NUMBER SEQUENCE

Z54

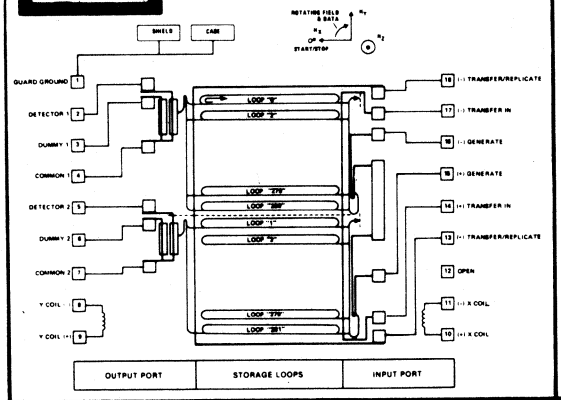

Z57

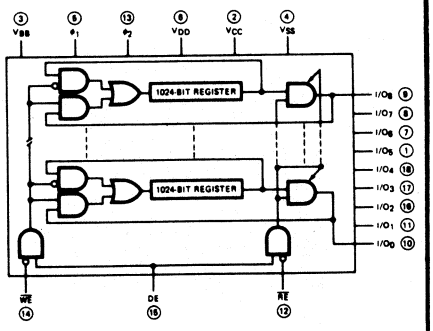

Z59

(Each minor loop contains 641 bubble position. 144 of the 157 minor loops are used)

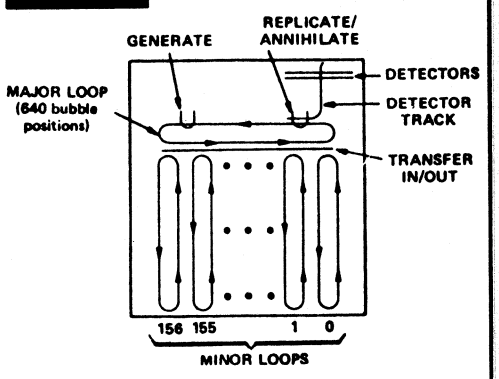

Z61

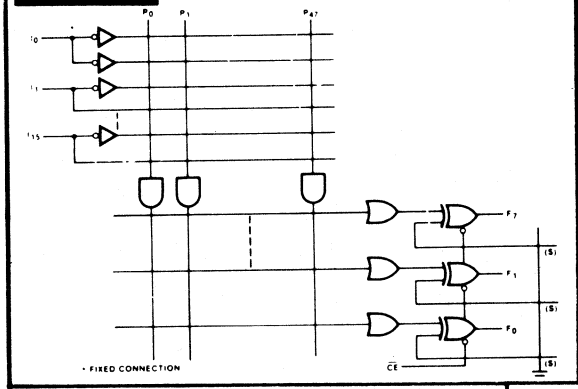

Z62

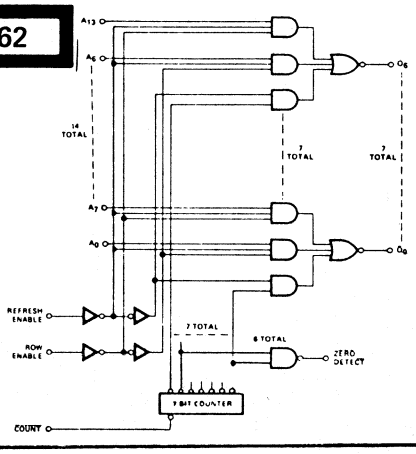

Z65

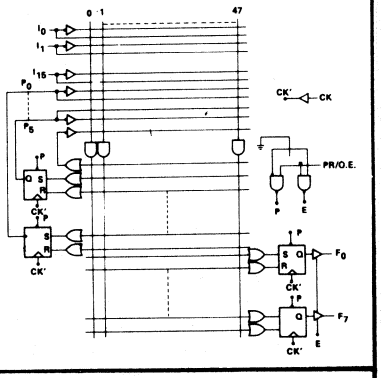

Z67

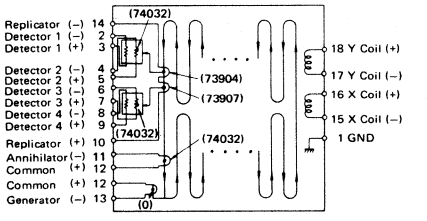

Z68

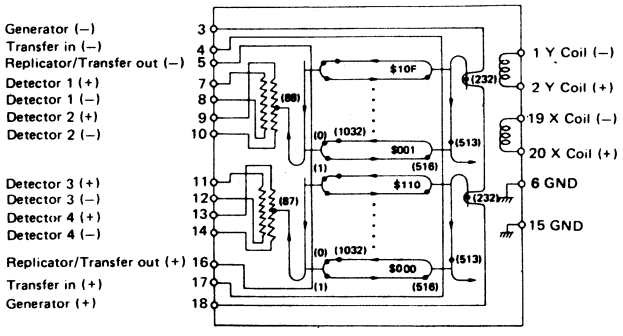

Z69

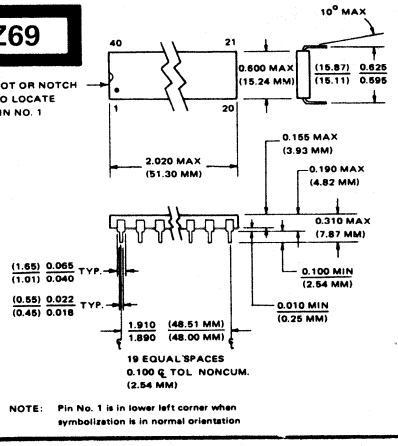

NOTE: Pin No. 1 is in lower left corner when symbolization is in normal orientation

Z70

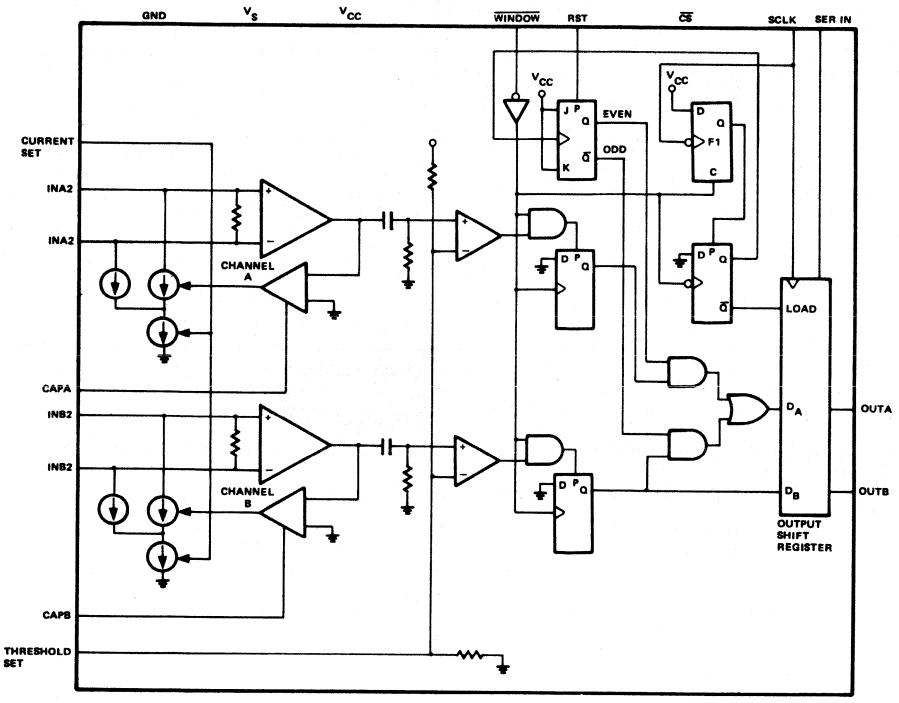
GND
V_S
V_{CC}
WINDOW
RST
CS
SCLK
SER IN
CURRENT SET
INA2
INA2
CHANNEL A
CAPA
INB2
INB2
CHANNEL B
CAPB
THRESHOLD SET
EVEN
ODD
LOAD
OUTA
OUTB
OUTPUT SHIFT REGISTER

Z71

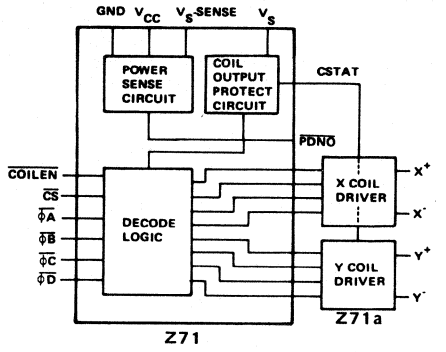
GND
V_{CC}
V_S-SENSE
V_S
POWER SENSE CIRCUIT
COIL OUTPUT PROTECT CIRCUIT
CSTAT
PDNO
COILEN
CS
ΦA
ΦB
ΦC
ΦD
DECODE LOGIC
X COIL DRIVER
Y COIL DRIVER
Z71
Z71a

Z72

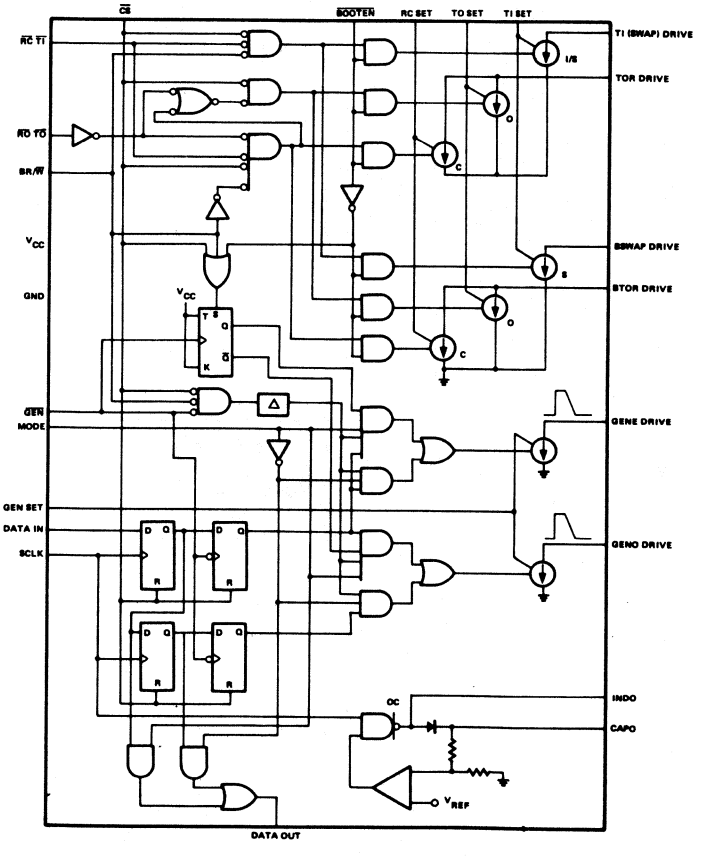
CS
BOOTEN
RC SET
TO SET
TI SET
RC TI
RD TO
BR/W
V_{CC}
GND
GEN
MODE
GEN SET
DATA IN
SCLK
TI (SWAP) DRIVE
TOR DRIVE
SSWAP DRIVE
STOR DRIVE
GENE DRIVE
GENO DRIVE
INDO
CAPO
OC
V_{REF}
DATA OUT

Z73

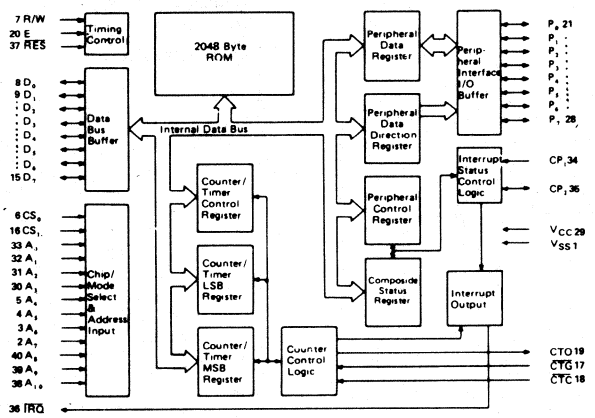

Z74

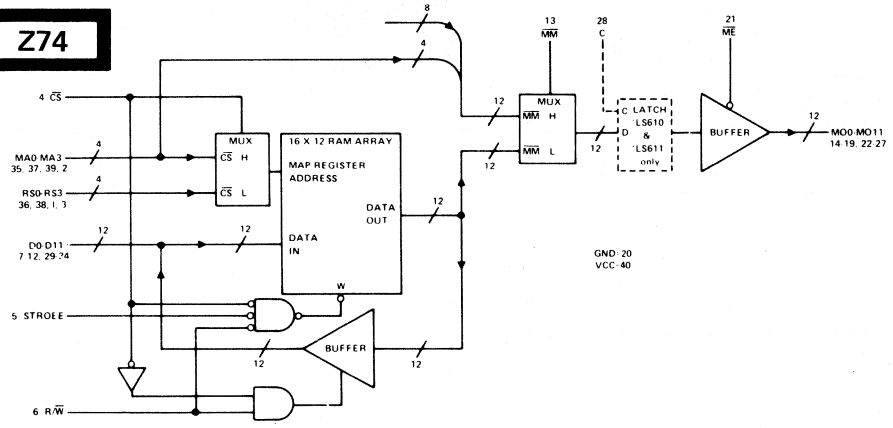

Z75

RD: Read Data Buffer
SG: Syndrome Generator
WD: Write Data Buffer
DS: Data Selector
CG: Check-bit Generator
CC: Check-bit Corrector
S: Syndrome Input Buffer
DC: Data Corrector
SD: Syndrome Decoder/Locator

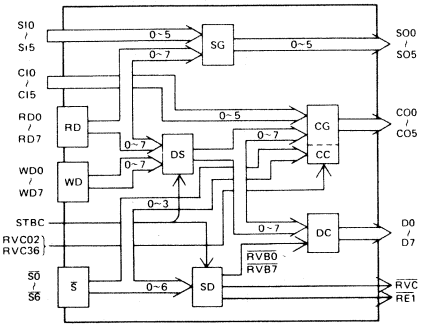

PIN NO	I O	NAME	PIN NO	I O	NAME
1	I	RVC02	33	O	D7
2	O	CO0	34	O	D5
3	I	CI1	35	O	D3
4	I	CI2	36	O	D1
5	O	CO2	37	O	D0
6	I	RVC36	38	I	CI0
7	I	CI3	39	O	CO1
8	I	CI4	40	-	GND
9	I	CI5	41	O	CO3
10	I	WD1	42	O	CO4
11	I	WD3	43	O	CO5
12	I	WD4	44	I	WD0
13	I	WD6	45	I	WD2
14	I	WD7	46	I	WD5
15	I	STBC	47	-	VCC
16	I	RD1	48	I	RD0
17	I	RD3	49	I	RD2
18	I	RD5	50	I	RD4
19	I	RD7	51	I	RD6
20	O	SO0	52	I	SI0
21	I	SI1	53	O	SO1
22	I	SI2	54	-	GND
23	O	SO2	55	I	SI3
24	O	SO3	56	I	SI4
25	O	SO4	57	I	SI5
26	O	SO5	58	I	S1
27	I	S0	59	I	S3
28	I	S2	60	I	S6
29	I	S4	61	-	VCC
30	I	S5	62	O	D6
31	O	RE1	63	O	D4
32	O	RVC	64	O	D2

23. OUTLINE DRAWINGS

IN DRAWING NUMBER SEQUENCE

CY4

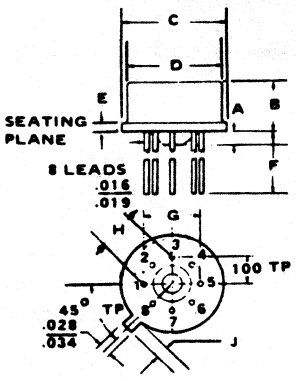

	A	B	C	D	E	F	G	H	J
CY4	.040 MAX	.165 .185	.335 .370	.305 .335	.040 MAX	.500 MIN	.200 T.P.		.029 .045
CY4a	.050 MAX	.165 .185	.335 .370	.305 .335	.040 MAX	.500 MIN	.200 T.P.		.029 .045
CY4b	.050 MAX	.240 .260	.335 .370	.305 .335	.040 MAX	.500 MIN	.200 T.P.		.029 .045
CY4c	.015 .045	.165 .185	.355 .370	.315 .325	.020 .030	.500 .562	.190 .210	.120 .160	.029 .040
CY4d	.015 .045	.165 .185	.355 .370	.315 .325	.020 .030	.500 .562	.220 .230	.120 .160	.029 .040
CY4e	.015 .050	.240 .260	.358 .362	.328 MAX		.500 MIN	.230		
CY4f	.040 MAX	.165 .185	.335 .370	.305 .335	.040 MAX	.500 MIN	.230		.029 .045

CY7

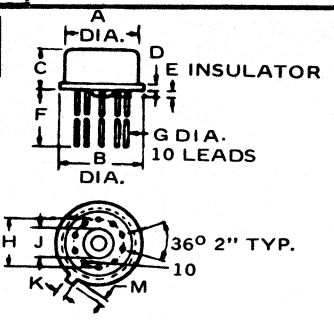

	A	B	C	D	E	F	G	H	J	K	M
CY7	.315 .325	.365 .370	.160 .185	.020 .030	.015 .045	.750 .810	.016 .019	.220 .240	.120 .160	.028 .034	.029 .040
CY7a	.305 .335	.335 .370	.165 .185	.040 MAX	.050 MAX	.500 MIN	.016 .019	.230		.028 .034	.029 .045
CY7b	.305 .335	.335 .370	.240 .260	.040 MAX	.010 .040	.500 MIN	.016 .019	.230 TP	.160 MAX	.028 .034	.029 .045
CY7c	.315 .325	.355 .370	.165 .185	.020 .030	.015 .045	.500 .562		.220 .240	.120 .160	.028 .034	.029 .040

CY8

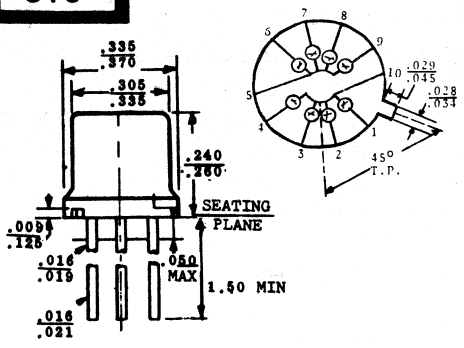

FL3

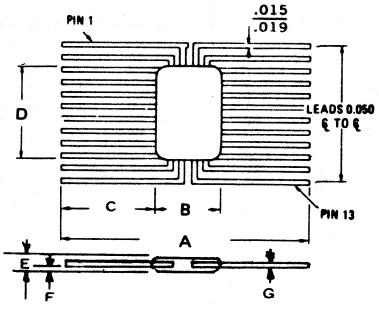

	A	B	C	D	E	F	G
FL3	.973 MAX	.283 MAX	.335 MIN	.408 MAX	.043 .063		
FL3a	.990 MAX	.270 MAX	.360 MAX	.390 MAX	.034 .044	.016 .023	.003 .004
FL3b	.940 .960	.245 .275	.330 .370	.370 .395	.040 .070	.011 .039	.003 .004
FL3c	.865 1.055	.365 .385	.250 .335	.365 .385	.060 .078	.020 .030	.004 .006
FL3d	.940 .960	.245 .275	.330 .370	.370 .395	.050 .080	.020 .031	.004 .006

FL11

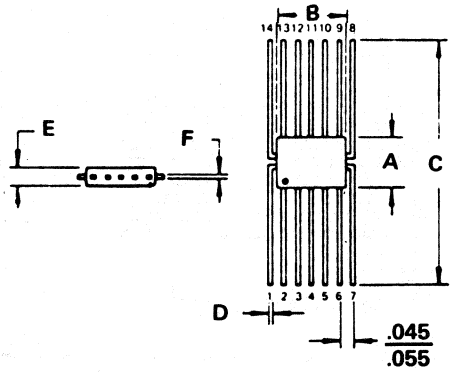

	A	B	C	D	E	F
FL11	.165 .195	.240 .270	.865 .895	.014 .017	.065 MAX	.003 .005
FL11a	.160 .190	.240 .275	.760 MIN	.010 .019	.040 .070	.003 .006
FL11b	.230 .260	.230 .260	.900 .980	.014 .019	.030 .070	.003 .006
FL11c	.240 .260	.240 .260	.740 1.00	.015 .019	.055 .080	.004 .006

FL14

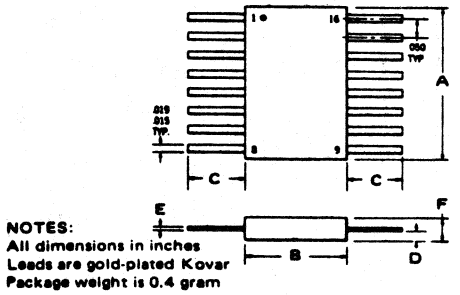

NOTES:
All dimensions in inches
Leads are gold-plated Kovar
Package weight is 0.4 gram

	A	B	C	D	E	F
FL14	.370 .410	.245 .280	.250 .350	.038	.004 .006	.060 .085
FL14a	.370 .400	.247 .270	.250 .370		.003 .006	.053 .065
FL14b	.390 MAX	.270 MAX	.260 MIN		.004	.045 .060
FL14c	.360 .410	.240 .275	.070 MIN			.030 .070
FL14d	.370 .395	.245 .275	.330 .370	.011 .039	.003 .004	.040 .070
FL14e	.385 MAX	.270 MAX	.360 TYP		.003 .005	.050 .060
FL14f	.395 .425	.270	.330 MIN	.025	.003 .007	.070 MAX
FL14g	.371 .409	.247 .283	.250 MIN	.024 TYP	.004 .006	.049 .090
FL14h	.371 .400	.247 .285	.250 .350	.024 TYP	.004 .006	.055 .080
FL14j	.371 .409	.247 .283	.250 .350	.024 TYP	.004 .006	.060 .075

FL21

	A	B	C	D	G	H	J	K	M	N	P	Q	R
FL21	.280 MAX	.010 .019	.008 .015	.005 MIN	.050	.004 MIN	.030 .070	.010 .040	.165 .390	.120 .200	.220 MAX	.003 .006	30° 90°
FL21a	.280 MAX	.010 .019	.008 .015	.005 MIN	.050	.004 MIN	.030 .085	.010 .040	.250 .370	.240 .260	.280 MAX	.003 .006	30° 90°

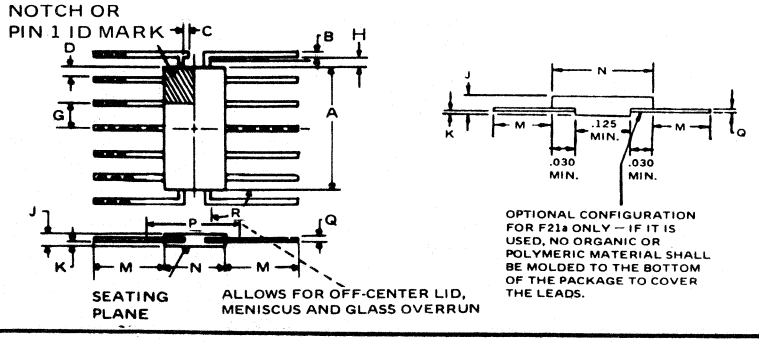

23. OUTLINE DRAWINGS

IN DRAWING NUMBER SEQUENCE

FL22

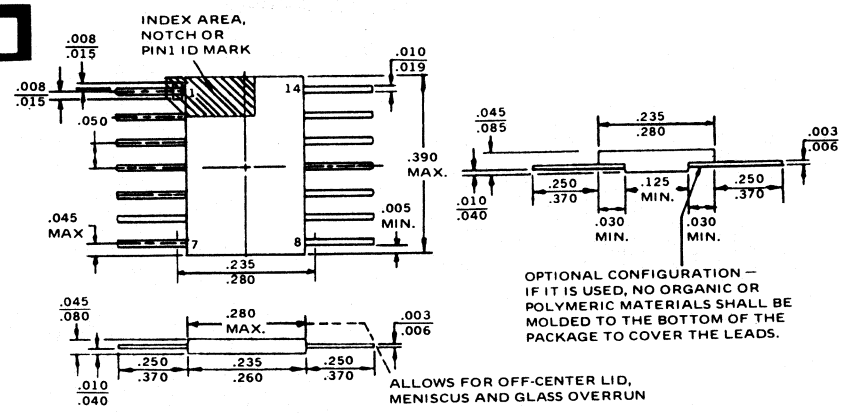

FL23

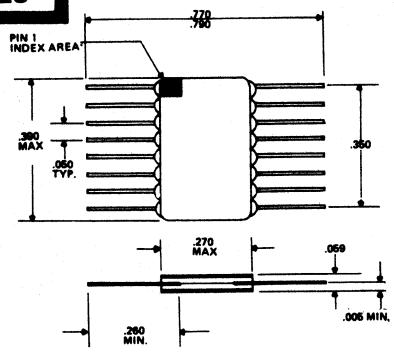

FL24

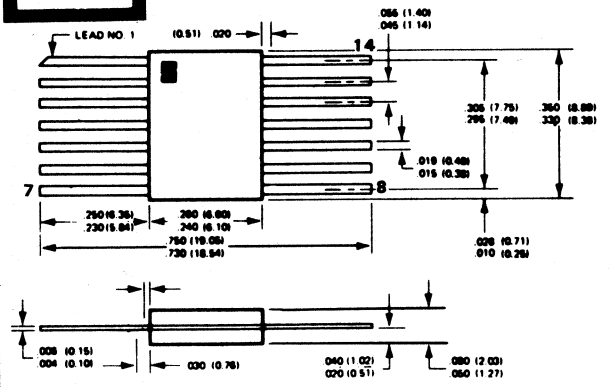

FL25

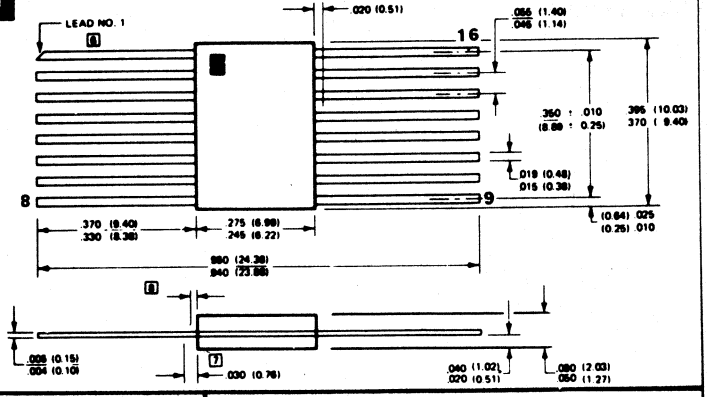

FL27

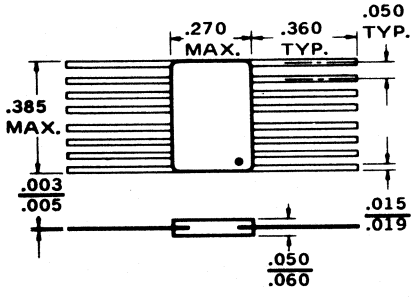

FL28

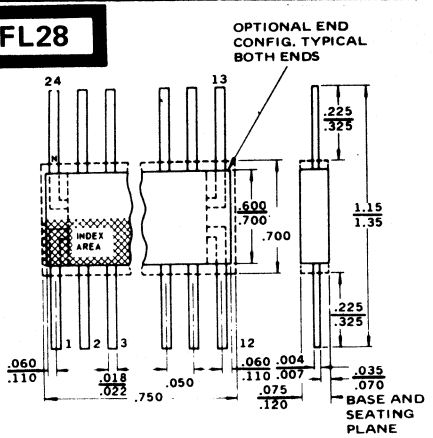

FL33

	A	B	C	D
FL33	.240 .280	.360 .410	.070 MAX	.930 .980
FL33a	.390 MAX	.390 MAX	.045 .065	.930 .980
FL33b	.245 .280	.370 .410	.030 .070	.900 .980

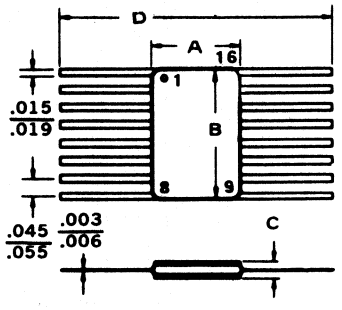

FL31

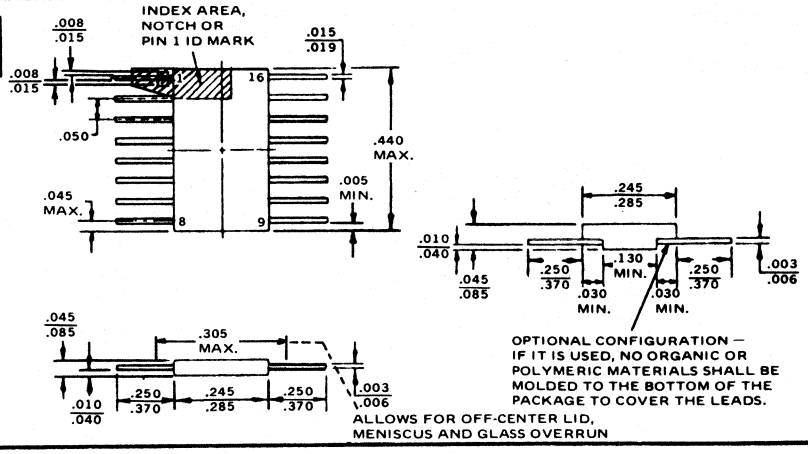

FL34

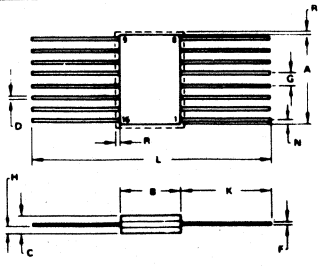

DIM	MILLIMETERS MIN	MAX	INCHES MIN	MAX
A	9.40	10.16	0.370	0.400
B	9.22	9.80	0.363	0.386
C	1.52	2.03	0.060	0.080
D	0.38	0.48	0.015	0.019
F	0.08	0.15	0.003	0.006
G	1.27 BSC		0.050 BSC	
H	0.64	0.86	0.025	0.034
K	9.35	9.40	0.368	0.370
L	10.07	-	0.745	-
M	-	-	-	-
N	-	0.51	-	0.020
R	-	0.38	-	0.015

NOTES
1. LEAD NO. 1 IDENTIFIED BY TAB ON LEAD OR DOT ON COVER
2. LEADS WITHIN 0.13 mm (0.005) TOTAL OF TRUE POSITION AT MAXIMUM MATERIAL CONDITION

23. OUTLINE DRAWINGS

IN DRAWING NUMBER SEQUENCE

FL40

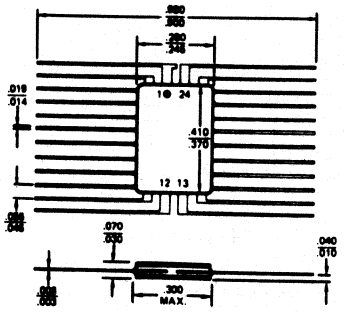

FL44

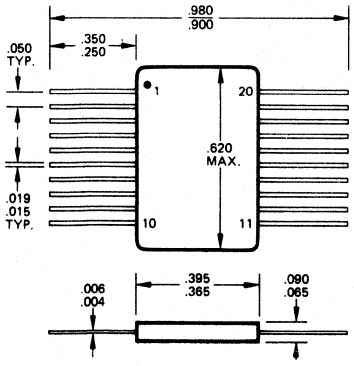

FL47

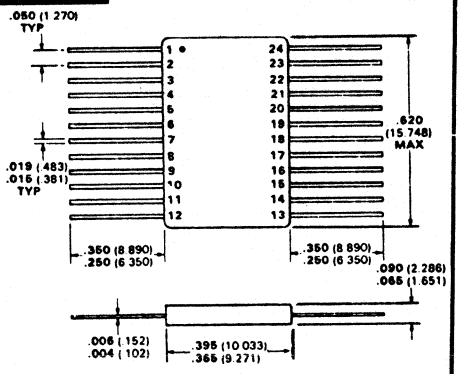

FL46

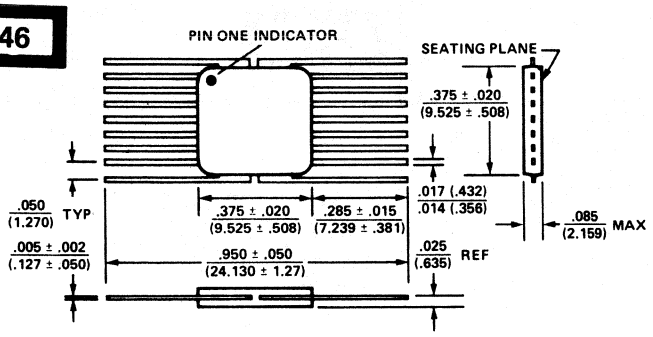

FL48

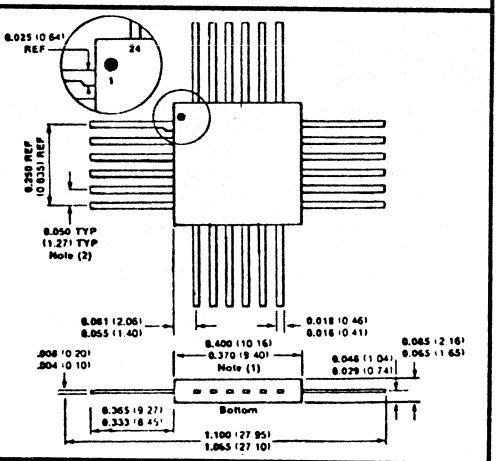

FL49

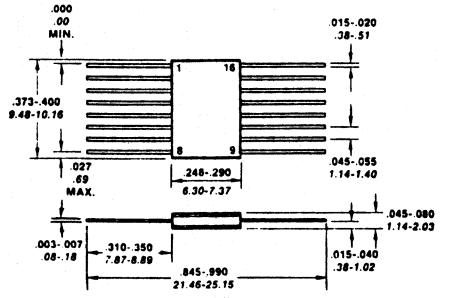

UNLESS OTHERWISE SPECIFIED:
ALL DIMENSIONS MIN.-MAX. IN INCHES.
ALL DIMENSIONS MIN.-MAX. IN MILLIMETERS.

FL50

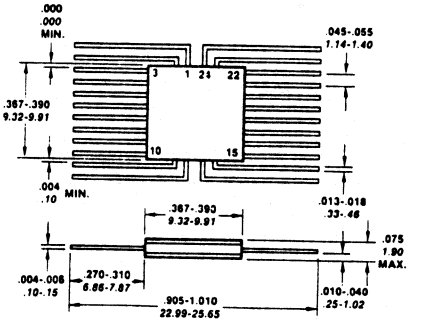

UNLESS OTHERWISE SPECIFIED:
ALL DIMENSIONS MIN.-MAX. IN INCHES.
ALL DIMENSIONS MIN.-MAX IN MILLIMETERS.

FL51

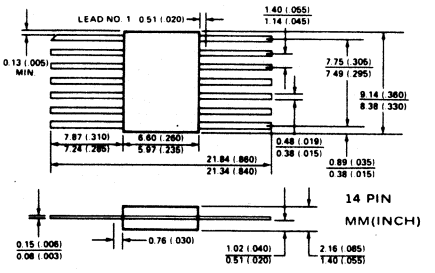

FL52

INCH
(MM)

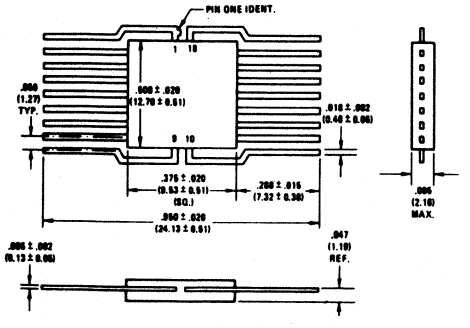

FL53

INCH
(MM)

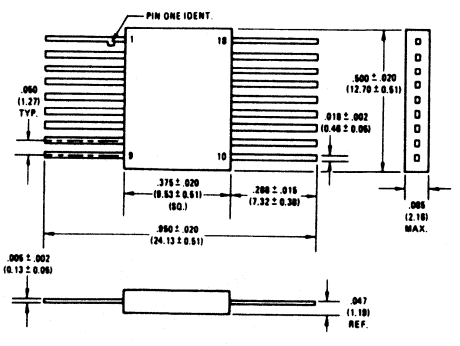

FL54

INCH
(MM)

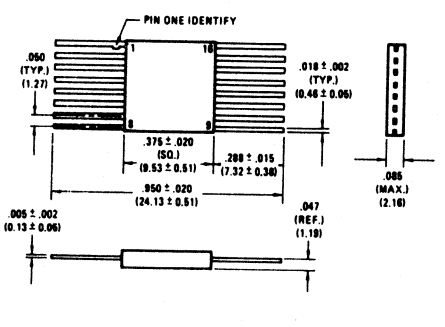

23. OUTLINE DRAWINGS

IN DRAWING NUMBER SEQUENCE

FL55

INCH (MM)

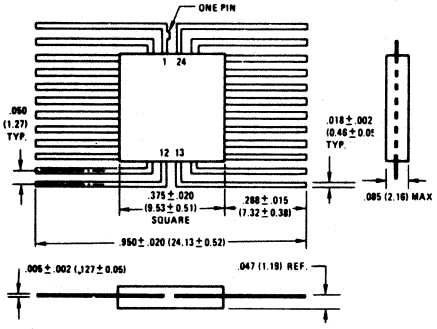

FL57

INCH (MM)

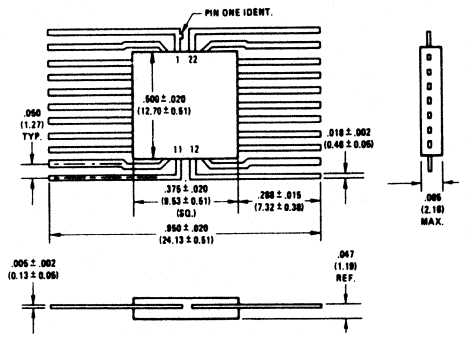

FL58

INCH (MM)

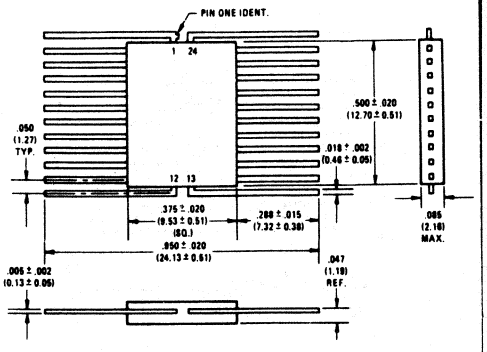

FL59

INCH (MM)

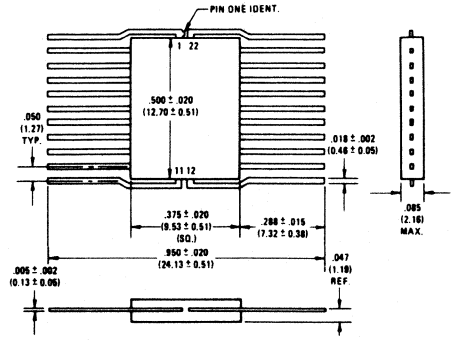

FL60

INCH (MM)

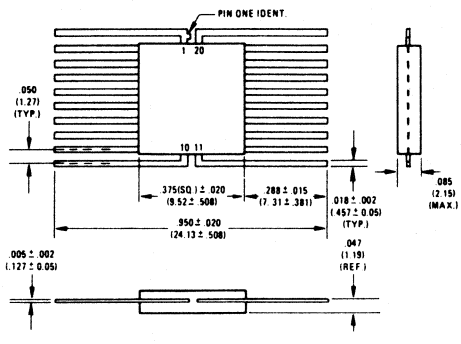

FL61

DIM	MILLIMETERS MIN	MILLIMETERS MAX	INCHES MIN	INCHES MAX
A	–	9.91	–	0.390
B	–	6.73	–	0.265
C	–	2.03	0.060	0.080
D	0.38	0.48	0.015	0.019
F	–	0.25	–	0.010
G	1.27 BSC		0.050 BSC	
H	0.89	1.14	0.035	0.045
J	0.08	0.15	0.003	0.006
K	–	8.26	–	0.325
N	0.64	0.89	0.025	0.035

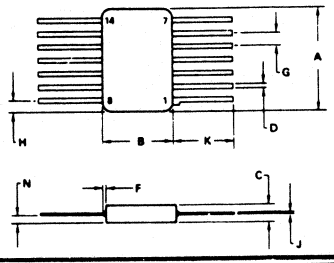

FL62

MFR.	PKG.	USE DWG.
TII	W	MO004AA
MOTA	W	FL61
AMV	W	FL66

FL63

MFR.	PKG.	USE DWG.
TII	W	MO004AG
MOTA	W	FL34
AMV	W	FL33b

FL64

DIM	MILLIMETERS MIN	MILLIMETERS MAX	INCHES MIN	INCHES MAX
A	–	13.00	–	0.515
B	5.84	6.60	0.230	0.260
C	1.52	2.16	0.060	0.085
D	0.41	0.46	0.016	0.018
F	–	0.25	–	0.010
G	1.27 BSC		0.050 BSC	
H	1.14	1.40	0.045	0.055
J	0.08	0.13	0.003	0.005
K	–	8.14	–	0.320
N	–	1.02	–	0.040

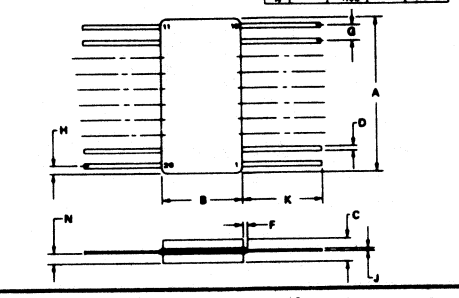

FL65

MFR.	PKG.	USE DWG.
MOTA	W	FL64
AMV	W	FL70

FL66

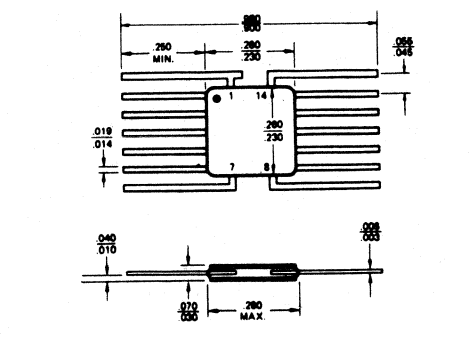

FL67

All dimensions in inches (bold) and millimeters (parentheses)

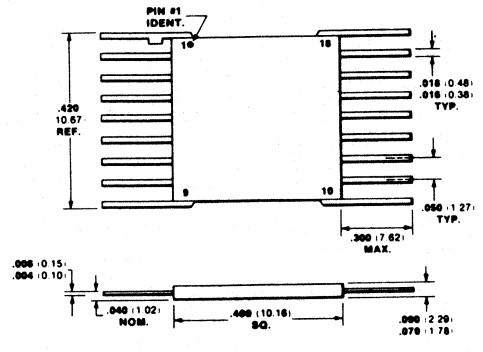

23. OUTLINE DRAWINGS

IN DRAWING NUMBER SEQUENCE

FL70

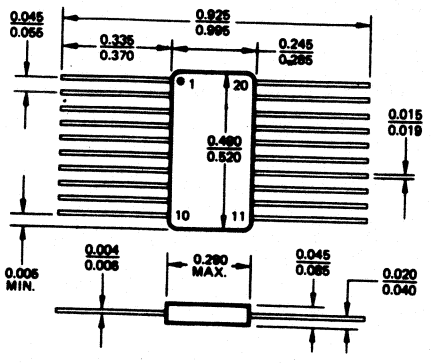

FL71

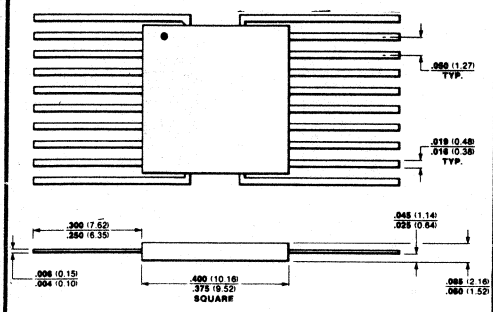

FL72

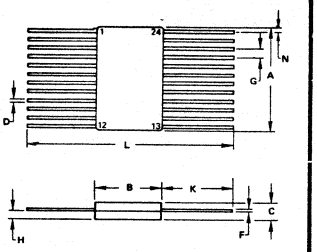

DIM	MILLIMETERS MIN	MAX	INCHES MIN	MAX
A	14.99	15.49	0.590	0.610
B	9.27	9.91	0.365	0.390
C	1.27	2.03	0.050	0.080
D	0.38	0.48	0.015	0.019
F	0.08	0.15	0.003	0.006
G	1.27 BSC		0.050 BSC	
H	0.69	1.02	0.027	0.040
K	6.35	9.40	0.250	0.370
L	21.97	–	0.865	–
N	0.25	0.63	0.010	0.025

NOTES:
1. LEADS WITHIN 0.25 mm (0.010) TOTAL OF TRUE POSITION AT MAXIMUM MATERIAL CONDITION.

FL73

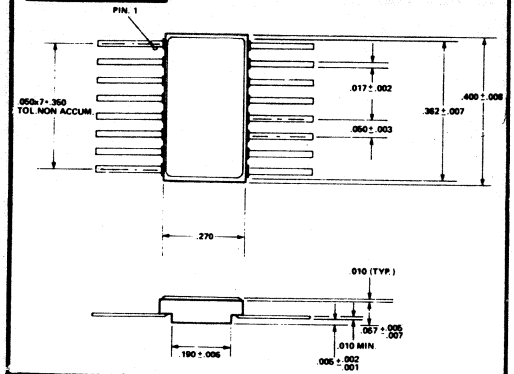

FL74

FL75

SYMBOL	INCHES MIN	INCHES MAX	NOTE	MILLIMETERS MIN	MILLIMETERS MAX.
A	0.075	0.120		1.91	3.04
B	0.018	0.022	1	0.458	0.558
C	0.004	0.007	1	0.102	0.177
e	0.050 TP		2	1.27 TP	
E	0.600	0.700		15.24	17.78
H	1.150	1.350		29.21	34.29
L	0.225	0.325		5.72	8.25
N	24		3	24	
Q	0.035	0.070		0.89	1.77
S	0.060	0.110	1	1.53	2.79
Z	0.700		4	17.78	
Z_1	0.750		4	19.05	

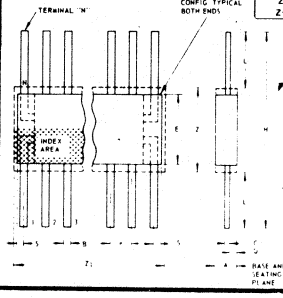

NOTES:
1. Refer to JEDEC Publication No. 13 for Rules for Dimensioning Peripheral Lead Outlines.
2. Leads within 0.005" (0.12 mm) radius of True Position (TP) at maximum material condition.
3. N is the maximum quantity of lead positions.
4. Z and Z_1 determine a zone within which all body and lead irregularities lie.

FL76

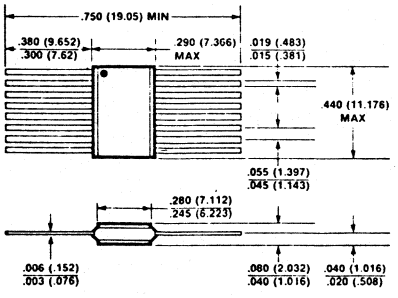

FL77

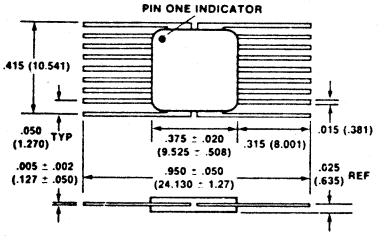

FL78

Dimension	Inches Min.	Inches Max.	Millimeters Min.	Millimeters Max.
A	.045	.085	1.14	2.16
B	.015	.019	.38	.48
C	.003	.006	.08	.15
D		.440		11.18
E	.245	.285	6.22	7.24
F		.305		7.75
G	.050 BSC		1.27 BSC	
H	.250	.370	6.35	9.40
J	.010	.040	.25	1.02
K		.045		1.14
L	.005		.13	

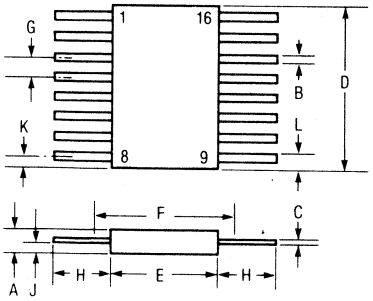

23. OUTLINE DRAWINGS

IN DRAWING NUMBER SEQUENCE

FL79

Dimension	Inches		Millimeters	
	Min.	Max.	Min.	Max.
A	045	090	1 14	2 29
B	015	019	38	48
C	003	006	08	15
D		640		16 26
E	360	420	9 14	10 67
F		440		11 18
G	050 BSC		1 27 BSC	
H	250	370	6 35	9 40
J	010	040	25	1 02
K		045		1 14
L	005		13	

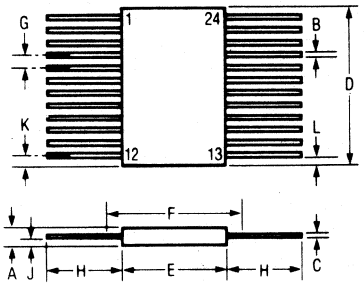

FL80

Dimension	Inches		Millimeters	
	Min.	Max.	Min.	Max.
A	045	085	1 14	2 16
B	015	019	38	48
C	003	006	08	15
D		440		11 18
E	245	285	6 22	7 24
F		305		7 75
G	050 BSC		1 27 BSC	
H	008	015	20	38
J	250	370	6 35	9 40
K	010	040	25	1 02
L	005		13	
M	004		10	
N	30°	90°	30°	90°

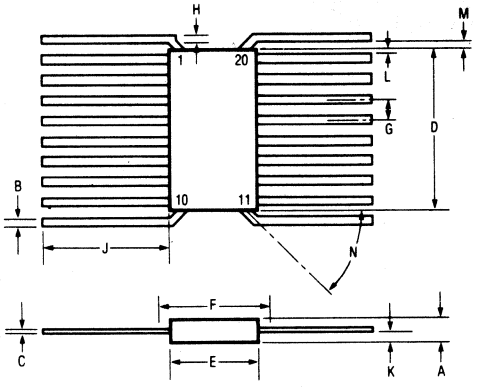

FL81

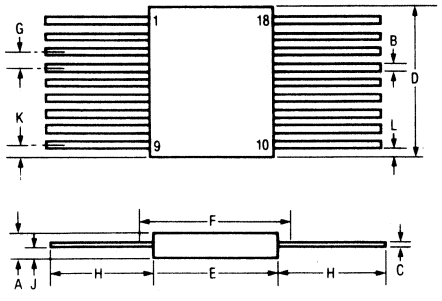

Dimension	Inches		Millimeters	
	Min.	Max.	Min.	Max.
A	050	085	1 27	2 16
B	015	019	38	48
C	003	006	08	15
D	590	625	14 41	15 88
E	220	310	5 95	7 87
F		320		8 13
G	050 BSC		1 27 BSC	
H	330	370	8 38	9 40
J	020	040	0 52	1 02
K	060	080	1 52	2 03
L		060		1 52

FL82

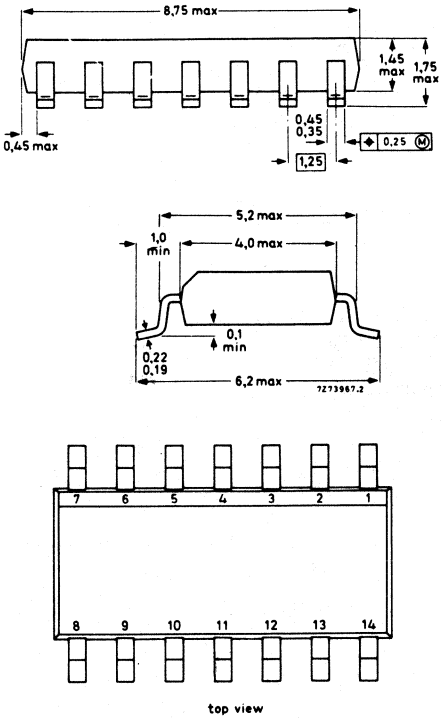

23. OUTLINE DRAWINGS

IN DRAWING NUMBER SEQUENCE

FL83

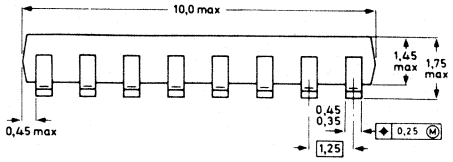

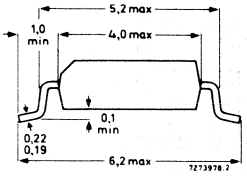

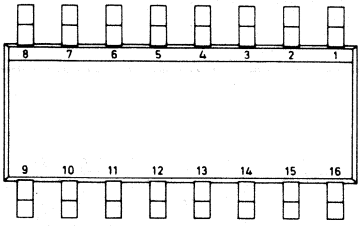

FL84

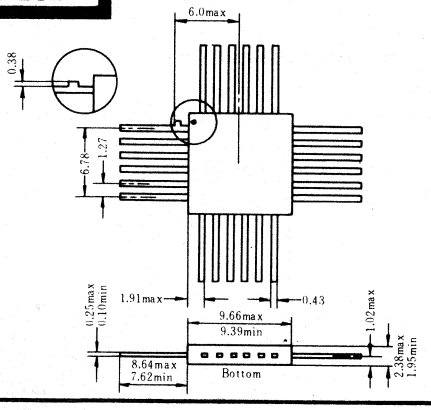

FL85

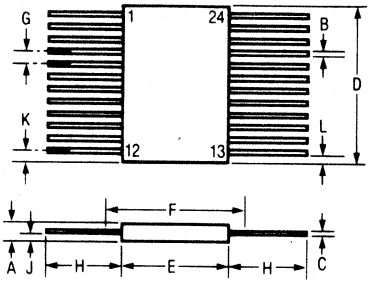

Dimension	inches		Millimeters	
	Min.	Max.	Min.	Max.
A	.045	.090	1.14	2.29
B	.015	.019	.38	.48
C	.003	.006	.08	.15
D		.640		16.26
E	.360	.420	9.14	10.67
F		.440		11.18
G	.050 BSC		1.27 BSC	
H	.250	.370	6.35	9.40
J	.010	.040	.25	1.02
K		.045		1.14
L	.005		.13	

FL86

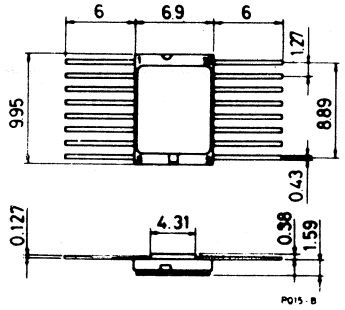

ML1

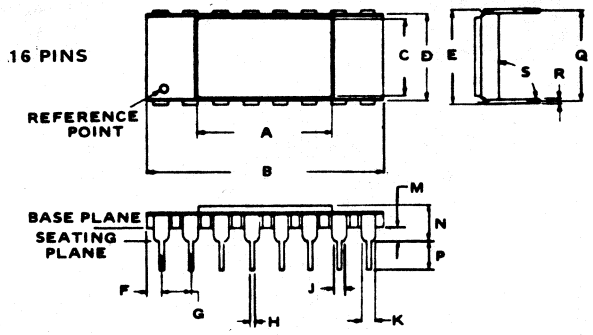

	A	B	C	D	E	F	G	H	J	K	M	N	P	Q	R	S	NOTCH
ML1		.800 MAX			.320 MAX		.092 .108				.018 MIN	.180 MAX		.300			
ML1a		.808 MAX			.294 MAX		.092 .108				.015 MIN	.194 MAX	.130	.294 .400			
ML1e	.485 MAX	.810 MAX		.295 MAX		.040 .060		.015 .020			.020 .060	.165 MAX	.125 MIN	.300	.008 .012		
ML1h	.350 .430	.735 .830		.240 .295		.030 .060	.090 .110	.015 .020	.040 .055		.020 MIN	.175 MAX	.150 MIN	.290 .310	.008 .012		NO NOTCH
ML1j		.810 MAX		.275 .295	.290 .310		.100 TYP	.015 .020			.020 MIN	.200 MAX	.090 MIN		.008 .012		NO
ML1k	.430 .470	.770 .810	.265 .285	.278 .300	.290 .310		.090 .100	.015 .020		.045 .065	.025 MIN	.110 .160	.125 MIN	.375 NOM	.010 .012		YES
ML1m		.760 .800		.287 .299		.050 MAX	.090 .110	.015 .023	.032 REF	.042 .062	.020 .043	.160 MAX	.120 .140	.290 .310	.008 .012		YES
ML1p		.760 .800		.287 .299		.050 MAX	.090 .110	.015 .023	.032 REF	.042 .062	.020 .043	.200 MAX	.120 .140	.290 .310	.008 .012		YES

ML2

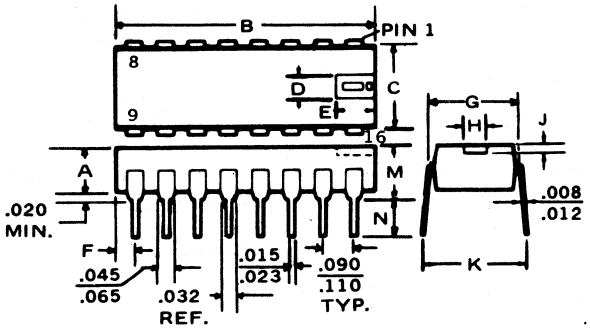

	A	B	C	D	E	F	G	H	J	K	M	N
ML2	.130 .155	.820 .850	.245 .255	.075	.125	.062	.290 .310	.075	.025	.290 .410	.200 MAX	.100 MIN
ML2b	.082 .100	.750	.285 MAX				.300 .310			.330 .370	.200 MAX	.100 MIN
ML2g		.670 MAX	.260 MAX				.300 TYP			.350 MAX	.200 MAX	.130 TYP
ML2k	.181 MAX	.870 MAX	.240 .263			.094 MAX	.287 .311			.301 .348	.200 MAX	.125 MIN
ML2m	.170 MAX	.744 .860	.241 .251				.325 MAX			.289 .375	.185 MAX	.125 .153

ML3

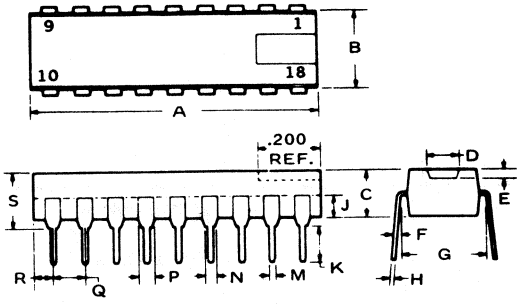

	A	B	C	D	E	F	G	H	J	K	M	N	P	Q	R	S	REMARKS
ML3	.905 .925	.240 .260	.140 .160	.100 REF	.025 REF	15° MAX	.290 MIN	.008 .012	.075 REF	.100 .150	.016 .024	.032 REF	.045 .065	.090 .110	.0575 REF	.200 MAX	NOTCH
ML3b	.920 MAX						.290 .310	.008 .013		.125 MIN	.015 .021	.033 MIN	.060	.100	.030 .070	.200 MAX	NOTCH
ML3g	.885 MAX	.252				15° MAX	.300	.009		.100 MIN	.019		.055	.100		.181 MAX	NOTCH
ML3h	.890 .910	.251 .261	.139 .149		.020 .030		.290 .310	.009 .011		.125 MIN	.016 .020		.060	.090 .110	.050 TYP	.159 .169	NOTCH
ML3j	.850 .930	.240 .295	.170 MAX				.290 .410	.008 .012		.100 .155	.015 .023		.045 .070	.090 .110	.025 .085	.210 MAX	NOTCH
ML3k	.920 MAX	.270 MAX				15° MAX	.325 MAX	.008 .014		.125 MIN	.015 .021	.033 TYP	.070 MAX	.100 TYP		.200 MAX	GROOVE OR NOTCH

ML4

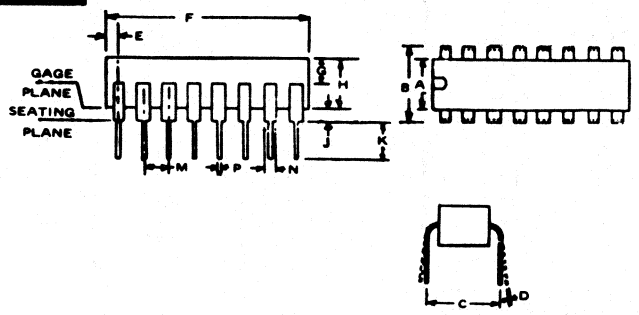

	A	B	C	D	E	F	G	H	J	K	L	M	N	P	REMARKS
ML4d	.220 .280	.290 .310	.290 .310	.008 .015		.747 .815		.200 MAX		.100 MIN	.090 .110	.030 .070	.014 .023	NOTCHED OR DOT
ML4g	.240 .260	.300 .325	.300	.008 .012		.745 .785		.100 .135	.020 .065	.125 .150	.100		.014 .020	
ML4j	.245 .255		.290 .410	.008 .012	.045 .065	.745 .855		.125 .155	.020 MIN	.100 MIN	.090 .110	.032 REF	.015 .023	NOTCHED

ML5

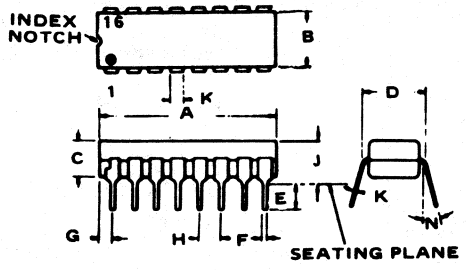

	A	B	C	D	E	F	G	H	J	K	L	M	N	REMARKS
ML5	.740 .780	.240 .275	.135 .165	.290 .325	.115 .135	.015 .020	.015 .035	.090 .110	.170 .200	.006 .012			0° 15°	
ML5a	.795 MAX	.256 MAX		.300 TYP	.118 MIN	.020 TYP		.100 TYP	.197 MAX	.008 .014	.019 MIN	.299 .394		
ML5b	.815 .835	.240 .260	.025 .035	.290 .310	.115 .135	.015 .020	.052 .072	.100	.160 .180	.008 .012			10°	
ML5c	.780 .780	.245 .255	.115 .125	.290 .310	.120 .130	.015 .021		.090 .110	.130 .160	.008 .012			15° MAX	NO INDEX NOTCH
ML5e	.810 MAX	.250 .295	.180 MAX	.290 .310	.090 MIN	.015 .020		.100 TYP	.200 MAX	.008 .012			15° MAX	
ML5f	.759 MAX		.129 MAX	.300	.135 MAX	.018	.029	.100		.059				

ML8

* — NOT INCLUDED IN ML8b AND ML8h.

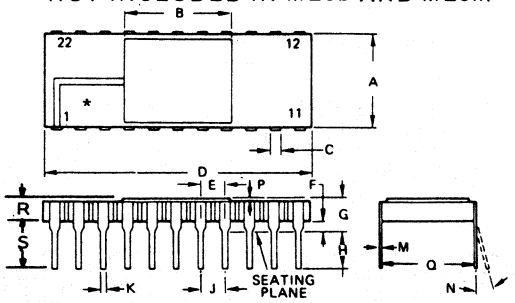

	A	B	C	D	E	F	G	H	J	K	M	N	P	Q	R	S
ML8a	.375 .405	.425 REF	.040 REF	1.065 1.100	.095 .105	.025 .050	.085 .130	.125 .150	.100 T.P.	.017 .023	.008 .012	0° 7°				
ML8c	.380 .396			1.065 1.095		.035	.085 MIN	.125 .200						.400		
ML8d	.380 .400		.043 .060	1.090 1.110		.020 .050	.200 MAX	.100 .150	.100	.016 .023	.010	0° 20°		.390 .410		
ML8e	.340 .360		.060 TYP	1.09 1.11		.020 MIN	.160 .180	.100 .150	.100	.016 .023	.010	0° 15°		.400		
ML8n	.390 .410		.040 .060	1.100 MAX		.020 MIN	.185 MAX	.120 .180	.100	.015 .021	.010					
ML8u	.380 .400		.040 .065	1.060 1.100		.015 MIN	.170 MAX	.100 MIN	.090 .110	.014 .023	.008 .015			.380 .480	.085 .135	
ML8w	.410 MAX			1.100 MAX			.160 MAX									
ML8x	.380 .396		.030 .055	1.069 1.091		.025 .050			.100	.015 .021	.008 .012	0° 10°		.390 .410	.110 .140	.125 .175

ML9

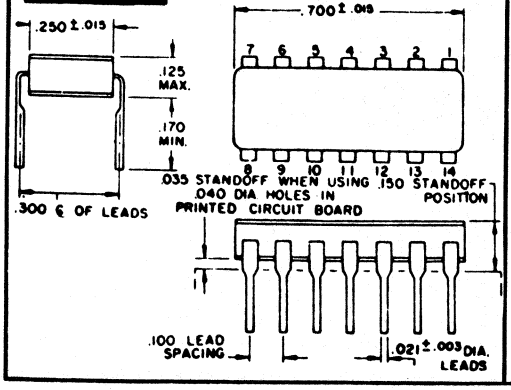

ML10

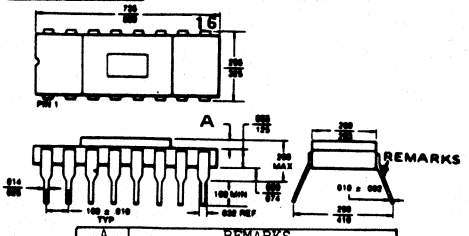

	A	REMARKS
ML10	.030 MAX	LEAD FRAME MAY BE ATTACHED AS SHOWN OR ON BOTTOM
ML10a	.030 MAX	AS SHOWN ONLY
ML10b	.030 MAX	AS SHOWN ONLY
ML10c	.050 MAX	AS SHOWN ONLY

23. OUTLINE DRAWINGS

IN DRAWING NUMBER SEQUENCE

ML14

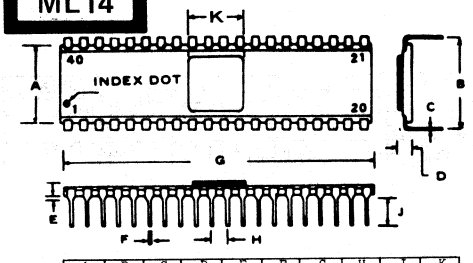

	A	B	C	D	E	F	G	H	J	K
ML14	.500	.600	.011 MAX	.130	.020 MIN	.021 MAX	2.00	.100	.125 .165	
ML14a		.585 .615	.010	.185 MAX	.020 MIN	.015 .021	2.02 MAX	.085 .115	.120 .180	
ML14b	.510 MAX	.600	.011 MAX	.130	.025 MIN	.021 MAX	2.01 MAX	.100	.200 MIN	
ML14c		.600 NOM	.010 NOM		.020 MIN		2.04 MAX	.100 NOM	.090 MIN	
ML14d	.590 MAX	.600	.008 .012	.165 MAX	.020 .060	.016 .020	2.020 MAX	.090 .110	.125 MIN	.520

ML15

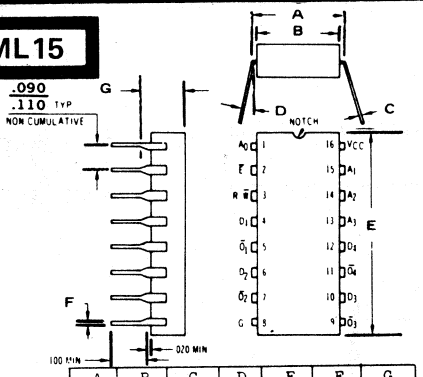

	A	B	C	D	E	F	G
ML15a	.290 .310	.265 .291	.009 .011		.755 .758	.016 .020	.170 .219

ML17

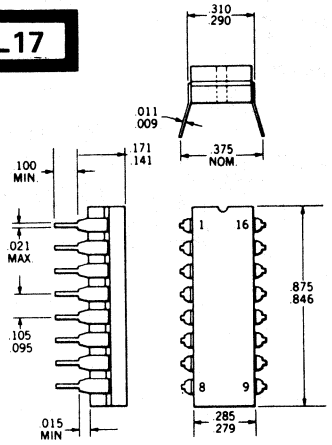

ML19

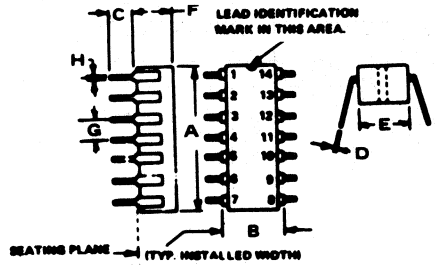

	A	B	C	D	E	F	G	H
ML19a	.685 .785	.325 MAX	.100 MIN	.008 .015	.240 .280	.200 MAX	.090 .110	.015 .023
ML19c	.775 MAX	.350 MAX	.150		.200 MAX	.200 MAX	.090 .110	.015 .023
ML19f	.755 .785	.290 .310	.130 MIN	.008 .014	.280	.200 MAX	.090 .110	.015 .023

ML21

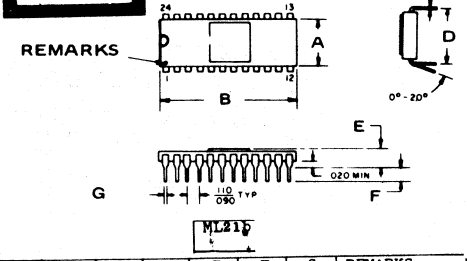

A	B	C	D	E	F	G	REMARKS
.545 .515	1.300 1.200	.010 .008	.650 .600	.195 .120	.215 .140	.020 .015	INDEX DOT ONLY

ML22

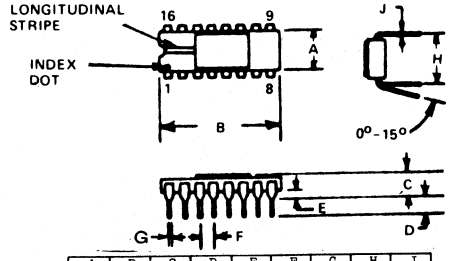

	A	B	C	D	E	F	G	H	J
ML22	.240 .295	.740 .830	.160 MAX	.090 MIN	.020 MIN	.090 .110	.014 .025	.290 .350	.008 .015

ML23

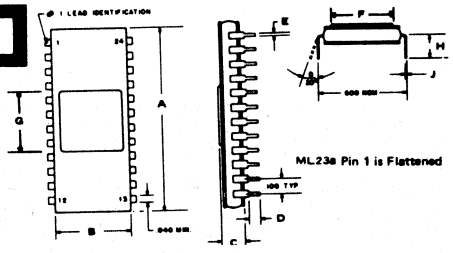

	A	B	C	D	E	F	G	H	J
ML23b	1.300 MAX	.495 .595	.137 MAX	.090 MIN	.015 .019	.397 .495	.397 .495		.010 TYP
ML23c	1.310	.575 .595	.180	.090	.015 .020				.008 .012

ML25

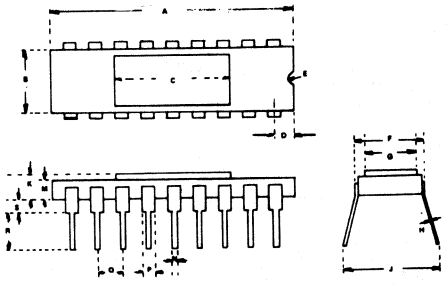

	A	B	C	D	E	F	G	H	J	K	M	N	P	Q	R	S
ML25a	.890 .910	.278 .288	.460 .470	.040 .060	.025	.290 .310	.271 .281	.009 .011	.375	.125 .155	.065 .085	.016 .020	.040 .045	.095 .105	.125 .175	.040 .060

ML29

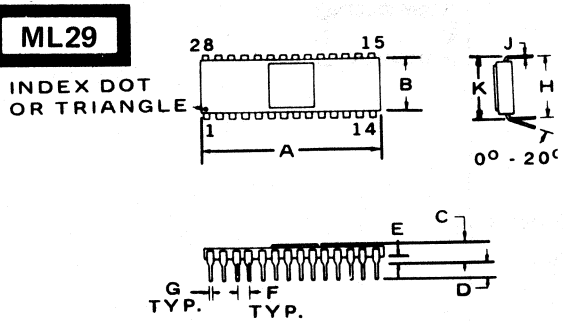

	A	B	C	D	E	F	G	H	J	K
ML29	1.33 1.47	.475 .530	.160 MAX	.090 MIN	.020 MIN	.090 .110	.014 .020	.590 .650	.008 .015	.590 .650

ML30

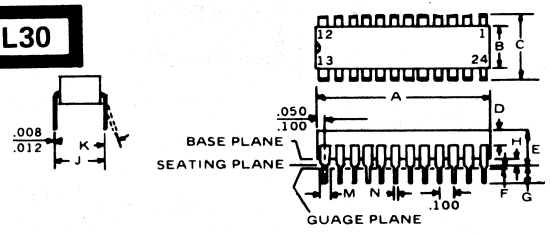

	A	B	C	D	E	F	G	H	J	K	M	N	REMARK
ML30e	1.15 1.22	.480 .520	.600 .625	.020 .080	.090 .150	.000 .030	.100 .180	.020 .065	.600	0° 15°	.045 .055	.015 .020	NO NOTCH
ML30g	1.14 1.25	.515 .610	.590 .620		.200 .280	.015 .080	.125 .200	.015 .080	.590 .620	0° 15°	.030 .070	.014 .023	
ML30h	1.244 1.256	.540		.075	.150		.125 MIN	.075	.600 .650	0° 15°	.060	.018 TYP	
ML30j	1.235 1.265	.510 .530	.600 .620		.155 .220		.100 .160	.015 .040	.620 .660	0° 15°	.040 .065	.015 .023	NO NOTCH
ML30k	1.290 MAX	.600 MAX	.625 MAX		.200 MAX		.125 MIN	.015 MIN		0° 15°	.070 MAX	.016 .021	
ML30l	1.310 MAX	.530 MAX	.600 MAX		.200 MAX	.020 MIN	.100 MIN	.020 MIN		0° 15°		.018	

23. OUTLINE DRAWINGS

IN DRAWING NUMBER SEQUENCE

ML31

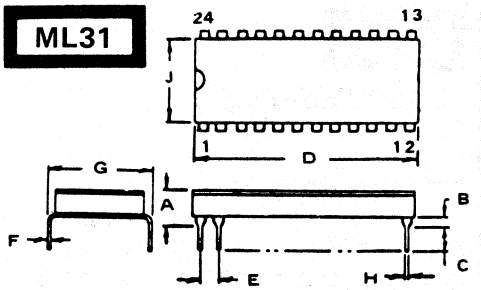

	A	B	C	D	E	F	G	H	J
ML31a	.100	.031	.150	1.17	.100	.010	.100	.600	.600
ML31b	.100		.171	1.37	.100	.010	.600	.017	.600
ML31c	.155	.034	.150	1.22 MAX	.100	.009	.600	.016	

ML32

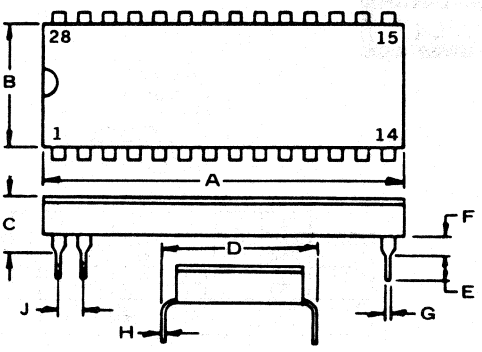

	A	B	C	D	E	F	G	H	J
ML32	1.37	.500	.150	.600	.145	.075	.017	.010	.100
ML32a	1.40	.500	.150	.600	.145	.075	.017	.010	.100
ML32b	1.37		.100	.550 MAX	.160	.081	.017	.010	.100
ML32c	1.472	.559	.198	.60	.125	.05	.019	.009	.100

ML34

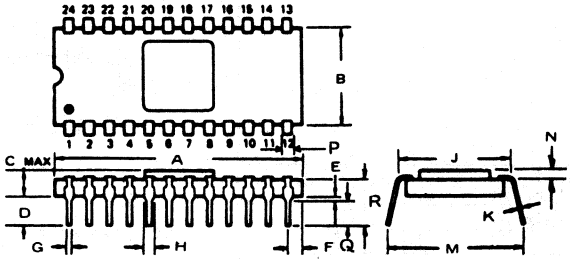

	A	B	C	D	E	F	G	H	J	K	M	N	P	Q	R
ML34c	1.17 1.30	.490 .550	.125 MAX	.165	.040		.015 .022	.032	.590 .610				.043 .060		
ML34e	1.17 1.30	.490 .545	.150 MAX		.015 .065		.015 .023	.045 .055	.590 .610					.050 .170	
ML34f	1.310 MAX	.480 .580	.180 MAX		.020 MIN		.015 .020		.590 .610	.008 .012				.090 MIN	
ML34g	1.250 MAX		.200 MAX		.020 MIN				.600	.010				.090 MIN	

ML38

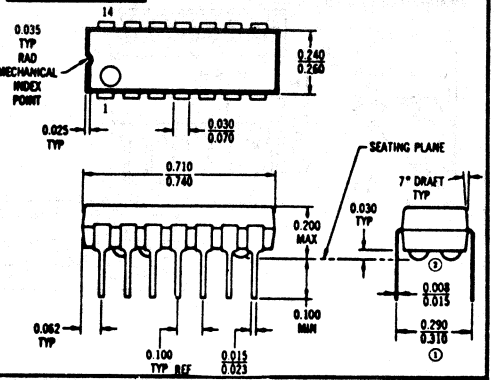

ML40

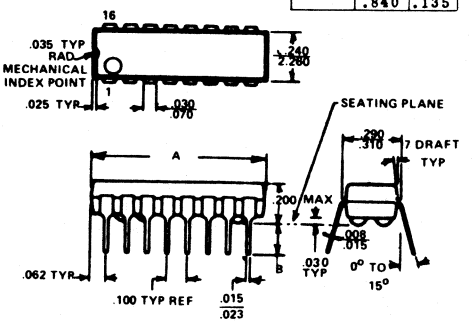

	A	B
ML40	.860 MAX	.100 MIN
ML40a	.810 .840	.115 .135

ML39

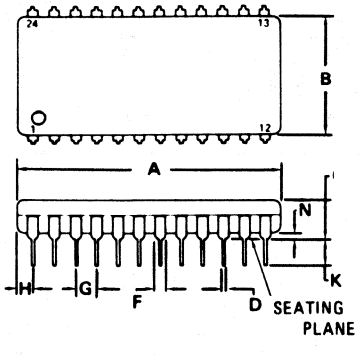

	A	B	C	D	F	G	H	J	K	L	M	N
ML39	1.235 1.265	.540 .560	.180 .200	.014 .020	.040 .060	.095 .105	.070 .080	.008 .012	.120 .140	.580 .600	0° 10°	.020 .040
ML39a	1.150 1.220	.480 .520	.090 .150	.015 .020	.045 .055	.100 TYP	.020 .060	.008 .012	.100 .180	.600 TYP	15° MAX	.020 .065
ML39d	1.220 MAX	.600 MAX	.175 MAX									

NOTES:
1. LEADS, TRUE POSITIONED WITHIN 0.25 mm (0.010) DIA AT SEATING PLANE AT MAXIMUM MATERIAL CONDITION (DIM. "D")
2. DIM "L" TO CENTER OF LEADS WHEN FORMED PARALLEL.

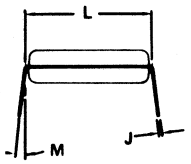

ML41

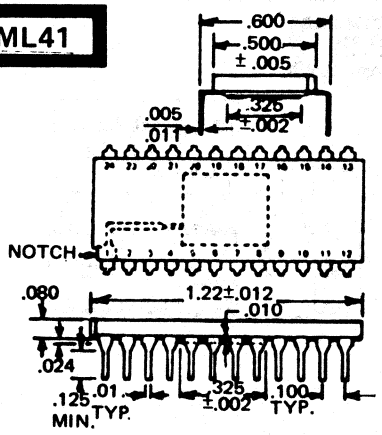

23. OUTLINE DRAWINGS

IN DRAWING NUMBER SEQUENCE

ML47

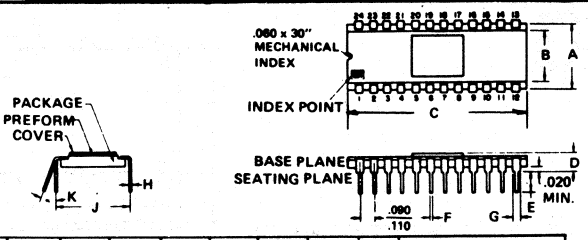

	A	B	C	D	E	F	G	H	J	K	REMARKS
ML47	.450 .470	.355 .365		.150 MAX	.050 .150	.017 .023	.045 .055	.007 .011	.490 .510	0° 20°	
ML47a	.470 .530		1.14 1.23	.070 MIN	.100 MIN	.015 .022		.009 .011	.750 MAX		INDEX POINT ONLY NO NOTCH
ML47e	.480 .510		1.19 1.23	.100 .120	.145 .175	.015 .021	.045 .060	.008 .012	.625 .675		

ML50

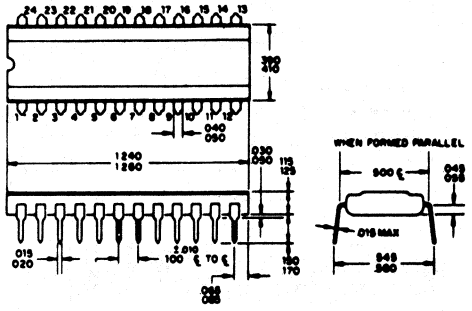

ML48

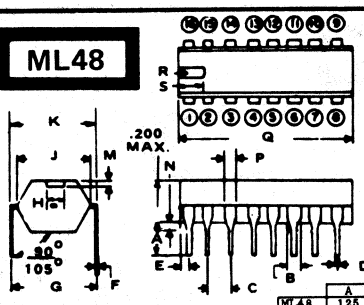

	A	B	C	D	E	F	G	H	J	K	M	N	P	Q	R	S
ML48	.125 MIN	.033 MIN	.100	.015 .021	.100	.008 .014	.300 .350	.080	.240 .280	.290 .310	.010	.020 MIN	.070 MAX	.870 MAX	.093	.180
ML48a	.140 MIN	.036 MIN	.100	.018		.008 .014	.300 .350		.240 .280	.290 .310	.010			.870 MAX		
ML48e	.120 .153		.100	.014 .021	.086	.009	.300 .374			.324		.020 MIN		.886 MAX		

ML51

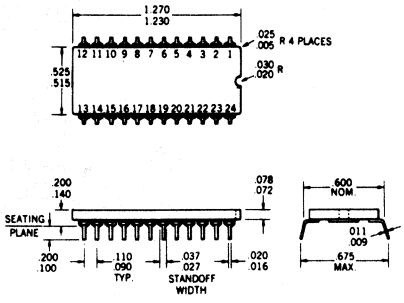

ML52

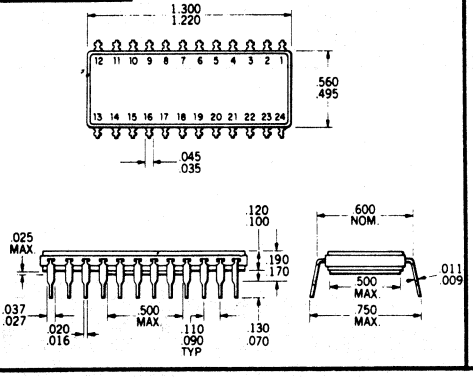

ML57

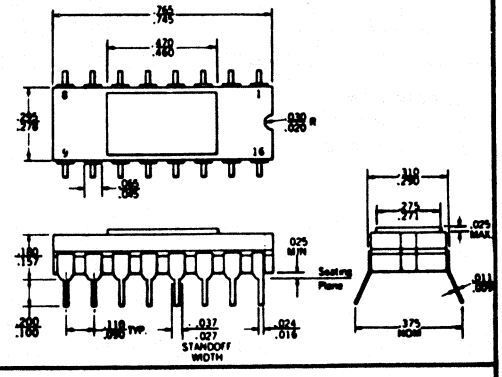

ML59

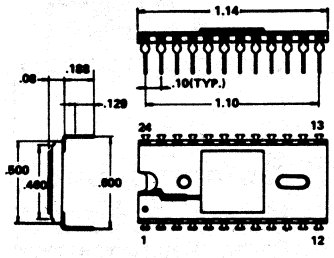

ML60

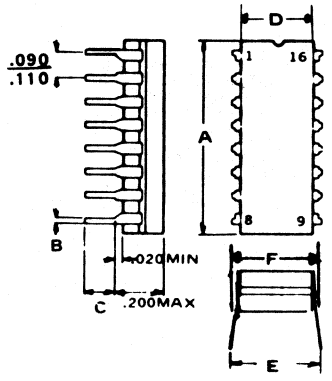

	A	B	C	D	E	F
ML60	.785	.020	.150	.290 .310	.350 MAX	
ML60a	.755 .785	.015 .023	.130 MIN	.280 MAX	.325 .395	.290 .310
ML60b	.740 .780	.015 .020	.115 .135	.240 .275		.325 MAX
ML60c	.799 MAX	.014 .020	.099 .149		.299	.335 MAX
ML60d	.780 MAX	.015 .023	.100 MIN	.250		.300
ML60e	.795 MAX	.018	.100 MIN	.263		.300

23. OUTLINE DRAWINGS

IN DRAWING NUMBER SEQUENCE

ML61

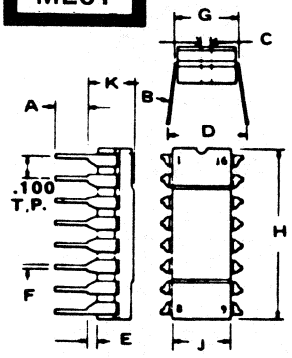

	A	B	C	D	E	F	G	H	J	K
ML61	.100 MIN	.009 .011		.375	.015 MIN	.033 MAX	.290 .310	.750 .785	.240 .280	.200 MAX
ML61a	.130 MIN	.008 .014	.050	.300 .350	.020 MIN	.015 .023	.290 .310	.755 .785	.245 .280	.200 MAX
ML61d	.125 .165	.008 .014		.325 .395	.020 .040	.015 .023	.290 .315	.755 .785	.280 MAX	.145 .175
ML61e	.125 .160	.008 .012			.020 .040	.015 .020	.290 .310	.750 .780	.245 .275	.160 .200

ML62

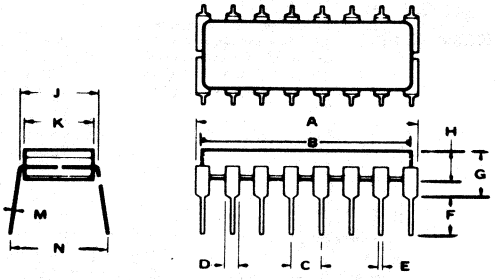

	A	B	C	D	E	F	G	H	J	K	M	N
ML62	.740 .760		.090 .110	.055	.019	.100 MIN	.200 MAX	.090 .110	.290 .310	.235 .265	.009 .011	.375
ML62a		.700	.090 .110	.040 MIN	.015 MIN	.100 MIN	.200 MAX	.145 MAX	.290 .310	.245 .275		
ML62b	.780 MAX	.725 MAX	.090 .110		.015 .019	.105 .145	.180 MAX		.320 MAX	.265 MAX	.010	.310 .350
ML62c	.730 .770		.090 .110	.030 .070	.015 .023	.100 MIN	.200 MAX	.120 MAX	.290 .310	.230 .265	.008 .015	.350 NOM

ML63

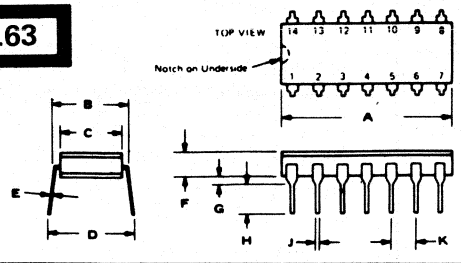

	A	B	C	D	E	F	G	H	J	K
ML63b	.660 .785	.290 .310	.230 .265	.350 TYP	.008 .011	.120 .180	.020 .080	.100 MIN	.015 .023	.090 .110
ML63c	.750 .785	.308 .314	.245 .271		.009 .011	.140 .185	.015 .060	.125 .200	.016 .020	.100 TYP

ML64

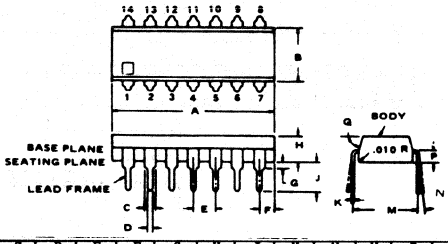

	A	B	C	D	E	F	G	H	J	K	M	N	P	Q	REMARKS
ML64	.760 .780	.245 .255	.050 .054	.015 .021	.090 .110	.065 .085	.015 .035	.115 .125	.135 .165	.015 .020	.290 .310	0° 20°	.060	70°	
ML64e	.745 .770	.240 .260	.050 .065	.014 .020	.100		.020 .050					0° 15°			INDEX DOT
ML64f	.800 MAX	.252		.016 .020	.100		.019	.181	.149 .188		.300				

ML65

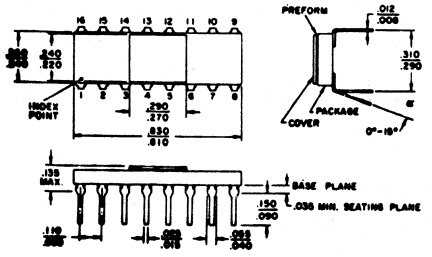

ML66

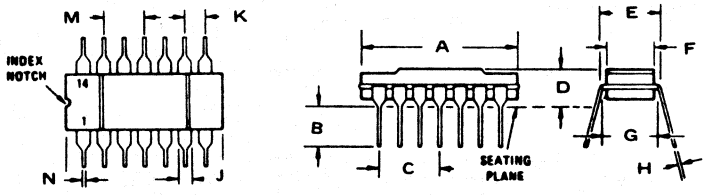

	A	B	C	D	E	F	G	H	J	K	M	N
ML66	.660 .780	.100 MIN	.290 .310	.200 MAX	.325 MAX	.220 .280	.290 .310	.008 .015	.030 .070	.090 .110	.190 .210	.015 .023
ML66a	.755 .785	.130 MIN		.200 MAX		.245 .280	.290 .310	.008 .014	.070 MAX	.100		.015 .023
ML66b	.755 .785	.130 MIN		.200 MAX	.325 .375	.280 MAX	.290 .310	.008 .014	.070 MAX	.090 .110		.015 .023

ML70

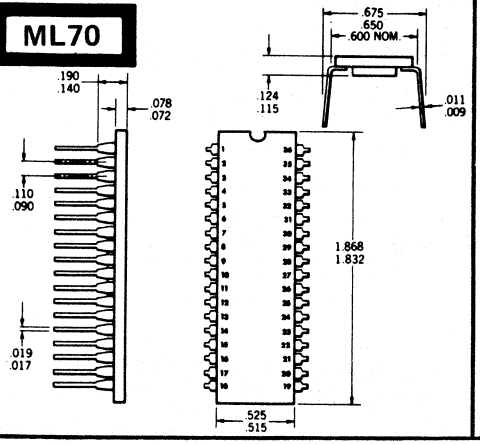

23. OUTLINE DRAWINGS

IN DRAWING NUMBER SEQUENCE

ML71

NOTES:

a. The true-position pin spacing is 0.100 between centerlines. Each pin centerline is located within ±0.010 of its true longitudinal position relative to pins (4) and (11)

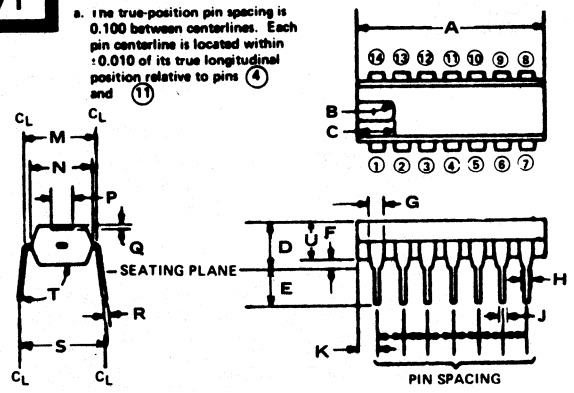

	A	B	C	D	E	F	G	H	J	K	M	N	P	Q	R	S	T	U
ML71	.710 .770	.093	.110	.200 MAX	.125 MIN	.020 MIN	.070	.033 MIN	.015 .021	.055 .095	.290 .310	.240 .260	.080	.010	.008 .014	.300 .350	90° 105°	
ML71f	.748	.098		.200	.110	.019	.045		.019	.074	.300	.251			.010	.300	90° 105°	
ML71g	.767 MAX			.185 MAX	.120 .153	.020 MIN	.047		.014 .020	.086	.324 MAX				.009	.300 .374		

ML72

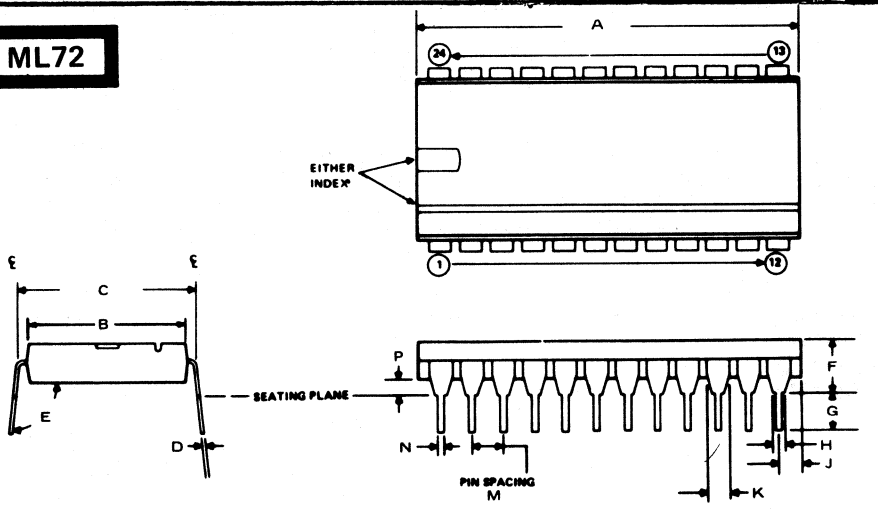

	A	B	C	D	E	F	G	H	J	K	M	N	P	REMARKS
ML72	1.310 MAX	.550	.625 .675	.008 .014	90° 105°	.200 MAX	.125 MIN	.033 MIN	.095 MAX	.070 MAX	.100	.015 .021	.020 MIN	NOTCH ONLY
ML72a	1.245 1.255	.585 .595	.625 .675	.008 .014	90° 105°	.200 MAX	.125 MIN	.033 MIN	.095 MAX	.070 MAX	.100	.015 .021	.020 MIN	NOTCH ONLY
ML72b	1.290 MAX		.590 .610	.008 .014	90° 105°	.200 MAX	.125 MIN	.033 MIN	.055 .095	.060	.100	.015 .021	.020 MIN	EITHER INDEX
ML72c	1.310 MAX	.550	.590 .610	.008 .014	90° 105°	.200 MAX	.125 MAX	.033 MIN	.095 MAX		.100	.015 .021	.020 MIN	NOTCH ONLY
ML72f	1.270 MAX	.550 MAX	.625 MAX	.008 .014	90° 105°	.200 MAX	.125 MIN	.033		.070 MAX	.100	.015 .021	.020 MIN	EITHER INDEX
ML72g	1.299 MAX	.519	.600	.010	90° 105°	.225 MAX	.126 MIN				.100	.019	.029 MIN	NOTCH ONLY

ML77

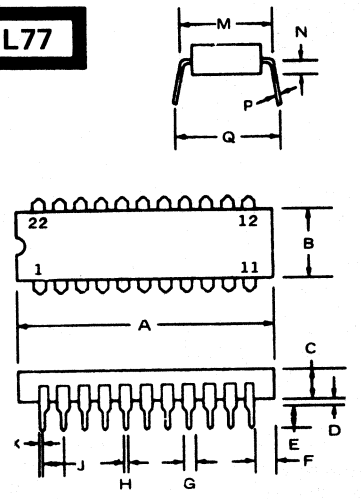

	A	B	C	D	E	F
ML77	1.080 MAX	.270 .340	.170 MAX	.030 MIN	.150 MIN	.010 MIN
ML77b	1.141 MAX		.180 MAX	.020 MIN	.114 .133	.078 MAX
ML77e	1.12 MAX	.360	.165 MAX	.035 MAX	.100 MIN	
ML77h	1.060 1.090	.364 .380	.170 MAX	.020 MIN	.150 MIN	.025 .045
ML77j	1.100 MAX	.400 MAX	.130 .180	.020 .070	.125 MIN	.100

G	H	J	K	M	N	P	Q
.060 TYP	.015 .020	.100 REF	.025 MAX	.400	.045 .065	.008 .012	.370 .480
.047	.015 .021	.100		.429 MAX		.009	.400 .490
	.020 TYP	.100 TYP		.400		.010	
.056 TYP	.018 TYP	.100 TYP		.420 MAX		.009 .011	.515 MAX
	.015 .021	.090 .110		.380 .420		.008 .012	.435 .535

ML84

	A	B	C	D	E	F	G	H	J
ML84	.775 .825	.290 .310	.472 REF	.040	.100 MIN	.200 REF	.030 .040	.070 TYP	.054 TYP

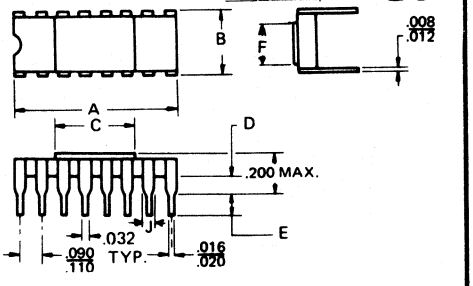

ML82

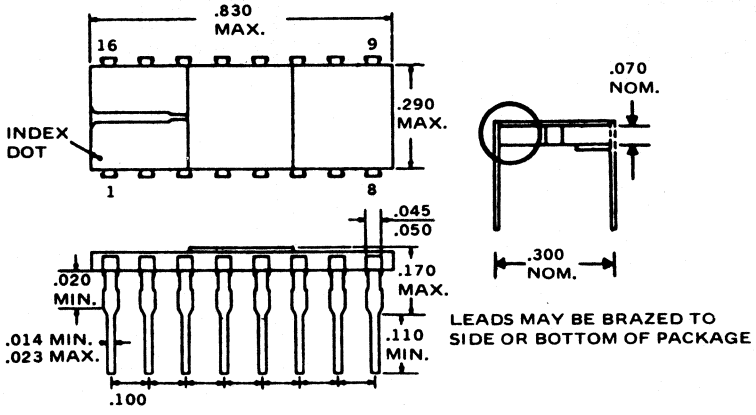

LEADS MAY BE BRAZED TO SIDE OR BOTTOM OF PACKAGE

ML85

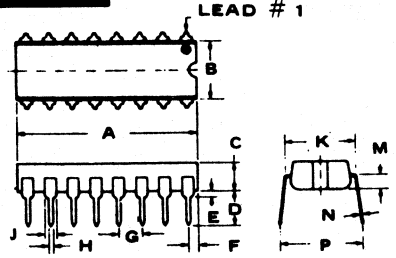

	A	B	C	D	E	F	G	H	J	K	M	N	P
ML85	.438 .795	.434 .795	.118 .138	.135 .185	.015 .035	.055 .088	.090 .110	.018 .021	.044 .063	.280 .310	.057 .068	.010 .015	.325 .375
ML85a	.740 .770	.840 .880	.145 MAX	.135 MIN	.016 MIN		.100	.015 .022	.038 .038	.280 .310		.008 .015	.325 .375
ML85b	.900 MAX	.885	.181	.145 .188	.019 MIN	.050 MAX	.100	.015 .019					

23. OUTLINE DRAWINGS

IN DRAWING NUMBER SEQUENCE

ML86

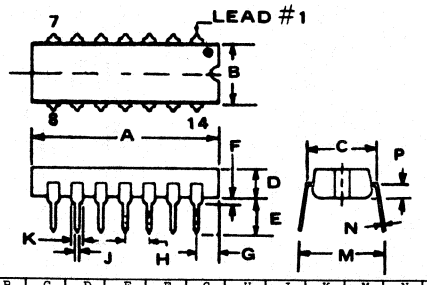

	A	B	C	D	E	F	G	H	J	K	M	N	P
ML86	.745 .755	.245 .252	.290 .310	.115 .125	.135 .165	.015 .035	.065 .085	.090 .110	.015 .021	.044 .052	.325 .375	.010 .015	.057 .068
ML86a	.740 .770	.240 .280	.290 .310	.145	.135 MIN	.015 MIN		.100	.015 .023	.040 .050	.325 .375	.008 .015	
ML86b	.697 MAX	.256 MAX	.300 TYP			.020 MIN		.100 TYP	.020 TYP		.299 .394	.008 .014	
ML86c	.783 MAX		.324 MAX	.180 MAX	.120 .170	.020	.100	.100	.015 .020	.044 .062	.300	.009 .011	

ML87

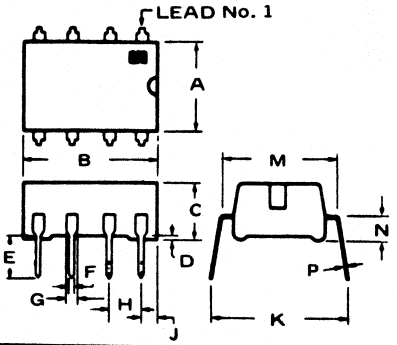

	A	B	C	D	E	F	G	H	J	K	M	N	P
ML87	.250 MAX	.365 .375	.155 .165	.010 MIN		.015 .020	.044 .050	.090 .110	.025 .045	.325 .375	.290 .310	.100 MAX	.010
ML87a	.245 .252	.365 .375	.155 .165	.010 .020	.120 .135	.015 .021	.044 .052	.090 .110	.025 .045	.325 .375	.290 .310	.075 .085	.010 .015

ML88

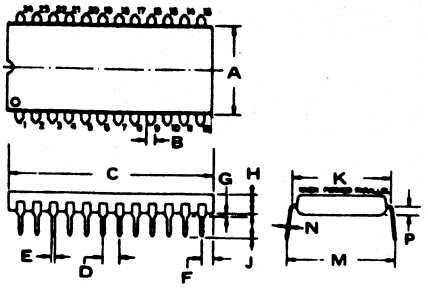

	A	B	C	D	E	F	G	H	J	K	M	N	P	REMARKS
ML88	.540 .560	.040 .050	1.24 1.26	.090 .110	.015 .020	.065 .085	.030 .060	.115 .125		.600	.645 .660	.015 MAX	.045 .055	
ML88a	.527		1.25	.090 .110	.017 .019		.020	.208	.120	.590		.007 .014		INDEX NOTCH ONLY
ML88b	.530		1.240 1.280	.100	.015 .021		.050 TYP	.170	.175	.600		.007 .015		INDEX NOTCH ONLY
ML88c	.525 .535		1.24 1.25	.090 .110	.018 .022		.020 NOM	.180 MAX	.145 MIN	.585 .595	.625 .675	.009 .011		INDEX NOTCH
ML88d	.510 .540	.045 .065	1.23 1.29	.090 .110	.015 .023		.020 .060	.180 MAX	.145 MIN	.590 .620	.700 NOM	.009 .011		INDEX NOTCH
ML88e	.500 .545		1.22 1.29	.090 .110	.015 .023		.020 MIN	.180 MAX	.145 MIN	.590 .610	.650 NOM	.008 .015		INDEX DOT
ML88f	.580 .610		1.190 1.230	.090 .110	.015 .021	.030 .065	.030 .070	.080 .120			.590 .620	.008 .012		
ML88g	.515 .575	.045 .065	1.230 1.290	.090 .110	.027 .037		.025 .063	.125 .210	.037 .175	.600 TYP	.750 MAX	.009 .011		INDEX NOTCH
ML88h	.530 .550	.040 .065	1.230 1.260	.090 .110	.015 .023		.020 .050	.140 .160	.125 .150		.600 .700	.008 .015		INDEX DOT
ML88i	.519		1.299	.100	.019		.019	.225	.126		.600	.010		NOTCH

ML89

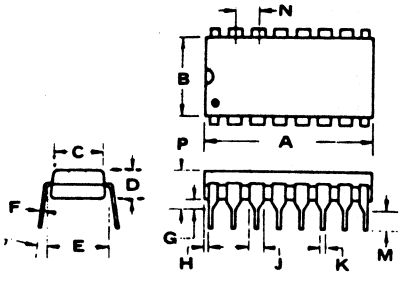

	A	B	C	D	E	F	G	H	J	K	M	N	P
ML89	.760 .765	.250	.235	.130	.300	.010	.040	.020	.060	.020	.130	.092 .108	.180 MAX
ML89a	.745 .755	.245 .252		.115 .125	.290 .310	.010 .015	.015 .035	.020 .030	.044 .054	.015 .021	.120 .135	.090 .110	.130 .160
ML89b	.750 .880	.235 .275		.180	.325 MAX	.008 .015	.020			.015 .023	.125 MIN	.090 .110	.200 MAX
ML89c	.787 MAX	.252 MAX			.300 MIN		.020 MIN	.043			.141 MAX	.100	.181 MAX
ML89d	.745 .755	.245 .255	.290 .310		.325 .375	.009 .011	.020 MIN			.018 .022	.125 MIN	.090 .110	.200 MAX
ML89e	.850		.250	.130	.300	.010	.100		.060 TYP	.018 TYP	.130 MAX		.165
ML89f	.748 TYP	.251			.307 .387	.008 .013	.020 .040	.039 .047	.047 .055	.017 .021	.129 .153	.092 .108	.159 .179
ML89g	.760	.248			.300	.008 .014	.019 MIN		.051	.014 .022	.110 MIN	.100	.200
ML89h	.760	.267			.300	.008 .014	.019 MIN		.051	.014 .022	.110 MIN	.100	.200
ML89j	.767 MAX				.300	.009	.020 MIN	.029 MAX	.047	.015 .020	.120 .153	.100	.185 MAX

ML92

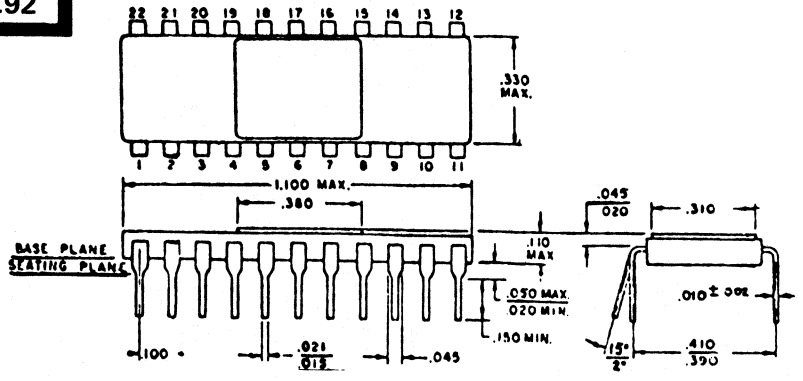

ML93

	A	B	C	D	E	F	G	H	J	K	M	N	P	Q
ML93	.750 .755	.245 .275	.025	.057 .065	.290 .310	.350 .400	.009 .012	.160 MAX	.180 MAX	.015 .018	.090 .110	.140 MAX	.200 MAX	.020 .055
ML93a	.765 MAX	.250		.060				.130		.020	.092 .106			.040
ML93b	.755 .785	.280 MAX		.070 MAX	.290 .315	.335 .395	.008 .014	.145 .175	.145 .205	.015 .023	.090 .110	.125 .165	.165 .215	.020 .040
ML93c	.765			.060	.300		.008 .012			.015 .021	.100	.125	.175	.025
ML93d	.785 MAX	.280 MAX	.025	.055 .065	.290 .320	.360 .410	.008 .012			.016 .022	.090 .110	.125 MIN	.200 MAX	.020 .070
ML93e	.799 MAX	.299 MAX						.180 MAX	.149 .170	.016 .020	.100	.130 .151	.200 MAX	.019
ML93f	.783 MAX	.251	.039	.059	.299		.009	.180 MAX	.120 MIN	.018	.100	.100	.199 MAX	.020 MIN
ML93g	.745 .770	.240 .260		.035 .065	.300 TYP	.300 .325	.008 .012			.014 .020	.100 TYP	.125 .150	.120 .160	.020 .065
ML93h	.715 .770	.240 .260		.040 .065	.300 TYP	.300 .325	.008 .012			.014 .020	.100 TYP	.115 .150	.155 .200	.020 .050
ML93j	.800 MAX			.059	.324 MAX	.300 .393	.009			.015 .023	.100	.126 .165	.208 MAX	.015 MIN

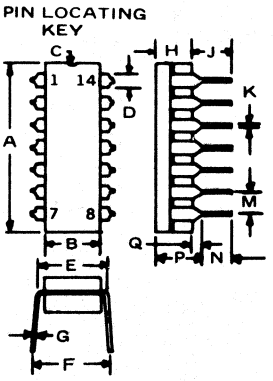

ML94

	A	B	C	D	E	F	G	H	J	K
ML94	.787 MAX	.255 MAX	.210	.330	.129	.160	.700	.090 .110	.017	.030
ML94a	.755	.244			.179	.120		.090 .110	.007 .014	.019
ML94b	.854 TYP.	.255 MAX		.299 .393	.177 MAX	.137 MIN		.090 .110	.015 .023	.019 MIN
ML94c	.740	.252 MAX		.330 .370	.126 MAX	.125 MAX		.100	.018	.025
ML94d	.870 MAX	.240 .260		.290 .310	.180 MAX	.140 MIN	.700 TP	.100 TP	.015 .021	.020 MIN

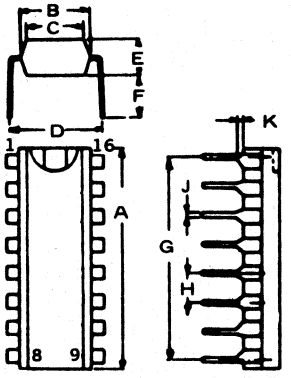

ML95

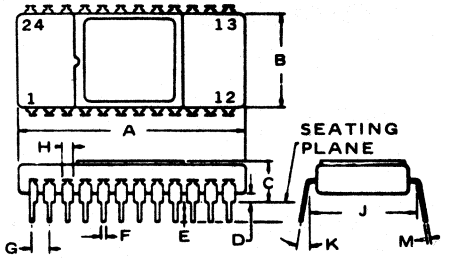

	A	B	C	D	E	F	G	H	J	K	M
ML95	1.10 1.29	.500 .545	.120 .180	.020 .050	.115 .165	.015 .020	.100	.040 .060	.590 .610	10° MAX	.008 .011
ML95a	1.14 1.29	.500 .560	.120 .180	.020 .050	.115 .165	.015 .020	.100	.040 .060	.590 .610	10° MAX	.011 .012

ML98

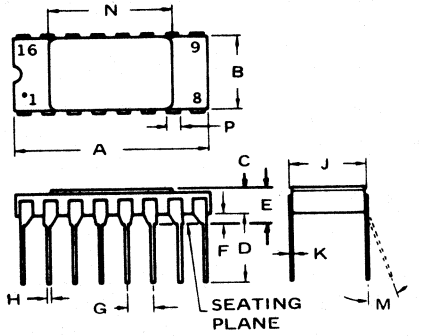

	A	B	C	D	E	F	G	H	J	K	M	N	P
ML98	.740 .757	.278 .288	.086 .144	.185 .200		.020 .045	.100	.017 .023	.300	.008 .012	10° MAX	.470	.045 .060
ML98a	.745 .808	.278 .310	.100	.120 .245		.020 .045	.100	.017 .023	.300	.008 .012	10° MAX	.470	.045 .060
ML98b	.740 .757			.140 .190	.105 .155	.025 .045	.100	.016 .020	.300	.008 .012	10°		.045 .055

ML102

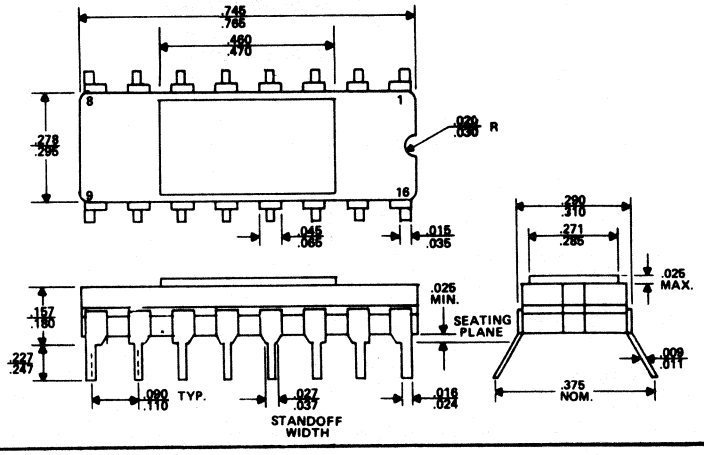

ML103

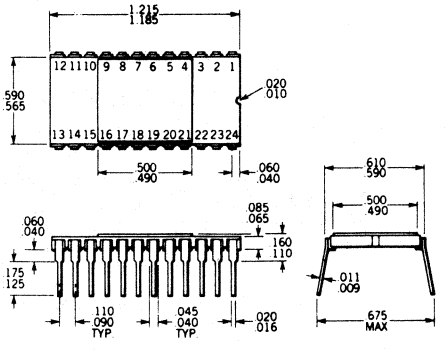

23. OUTLINE DRAWINGS

IN DRAWING NUMBER SEQUENCE

ML104

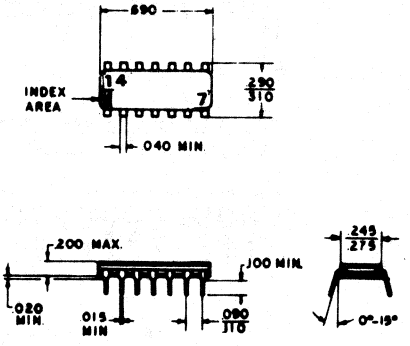

ML105

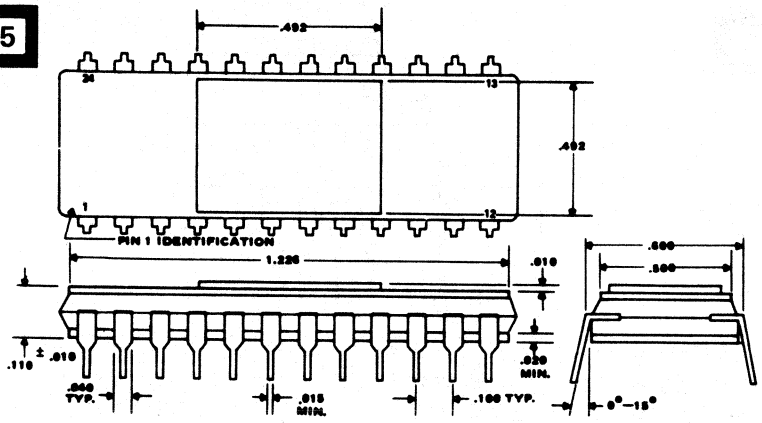

ML107

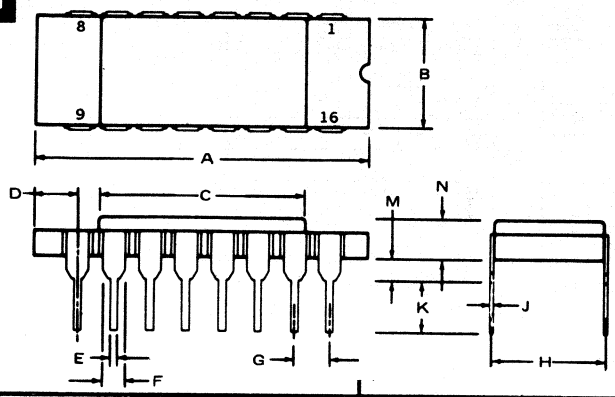

	A	B	C	D	E	F	G	H	J	K	M	N
ML107	.740 .830	.280 .310	.420 .470	.020 .065	.015 .021	.045 .060	.090 .110	.290 .320	.008 .012	.100 .140	.030 .060	.080 .120
ML107a	.740 .830	.280 .310		.020 .065	.015 .021	.045 .060	.090 .110	.290 .320	.008	.125 .175	.025 .055	.080 .120

ML112

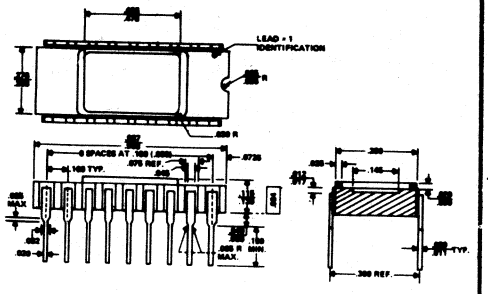

ML113

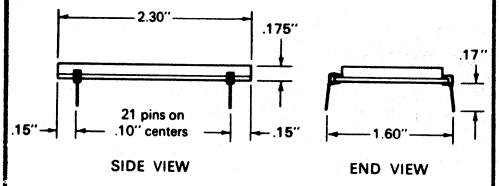

ML115

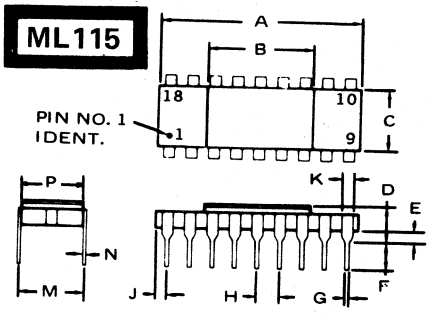

	A	B	C	D	E	F	G	H	J	K	M	N	P
ML115	.915 MAX		.310	.140 MAX	.020 MIN	.125 MIN	.018	.100	.050	.050	.300	.008 .011	.282
ML115a	.910 MAX	.490 MAX	.295 MAX	.165 MAX	.020 .060	.125 MIN	.015 .020	.090 .110	.040 .060	.054	.300	.008 .012	
ML115b	.900	.460 .490	.284 .304	.155 MAX	.035	.135	.016 .020	.100	.050 MAX		.300	.008 .012	.320 MAX
ML115c	.880 .920		.275 .305	.200 MAX	.015 MIN	.100 MIN	.014 .023	.090 .110		.040 .065	.280 .380	.008 .015	
ML115d	.890 .915		.275 .295	.200 MAX	.020 .060	.100 .150	.016 .023	.090 .110	.045 .065	.043 .060		.008 .012	.290 .310
ML115e	.870 .910	.400 .490	.280 .310	.080 .120	.020 .060	.125 .150	.015 .021	.090 .110		.040 .065	.290 .320	.008 .015	

23. OUTLINE DRAWINGS

IN DRAWING NUMBER SEQUENCE

ML116

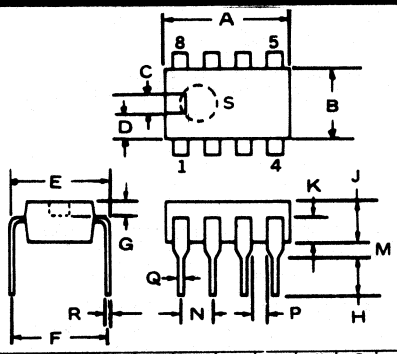

	A	B	C	D	E	F	G	H	J	K	M	N	P	Q	R	S
ML116	.400 MAX	.245 .255	.080	.085	.300 .320	.300 .350	.075 MAX	.125 MIN	.128 .132	.065 MAX	.020	.100	.040	.016 .020	.001 .010	NA
ML116a	.380 .400	.245 .255	.065 .075	.065 .075	.290 .310	.290 .410	.025	.100 .150	.125 .153		.020 MIN	.090 .110		.015 .023	.008 .012	NA
ML116b	.400 MAX	.245 .255			.300 .320	.310 .350	.030 MAX	.125 MIN	.125 .135	.065	.020 MIN	.100		.015 .021	.015 .019	.092 DIA

ML118

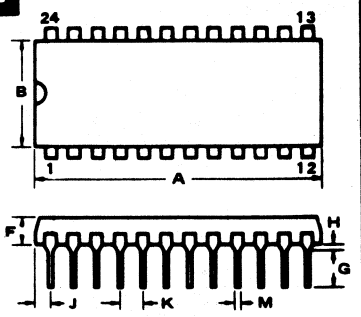

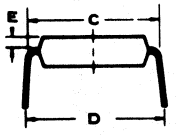

	A	B	C	D	E	F	G	H	J	K	M
ML118	1.25	.540 MAX	.610	.624 .650	.075	.160	.125 MIN	.030 MIN	.075	.100	.010
ML118a	1.22		.600	.600 .649	.055 .062	.125 .200	.137 .150	.035 .047	.066 .086	.100	.014 .020
ML118b	1.25 MAX		.600	.625		.181	.114 MIN	.019 MIN	.086 MAX	.100	.010
ML118c	1.22 1.25		.543 .559	.600 .649	.055 .062	.125 .200	.137 .150	.035 .047	.066 .086	.100	.001
ML118d	1.20 1.30	.500 .600		.600 .730		.170 .200	.100 .150	.020 .050		.090 .110	.015 .023
ML118e	1.31 MAX	.550	.550		.090			.020 TYP		.100	.018 TYP
ML118f	1.23 1.25	.530 .550	.590 .610			.145 .165		.020 MIN	.070 REF	.100 TYP	.016 .023
ML118g	1.307 1.322	.541 .561	.590 .610	.606 .649		.181 MAX	.125 MIN	.019 MIN	.094 MAX	.099	.018x.011
ML118h	1.259	.499	.599	.599		.157	.110	.031		.100	.017
ML1181	1.245 1.255	.540 NOM	.600 NOM	.625 NOM		.145 .155	.125 .135	.020 MIN		.100 TYP	.016 .020

ML124

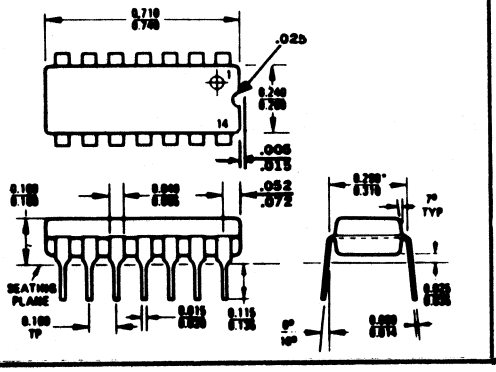

ML125

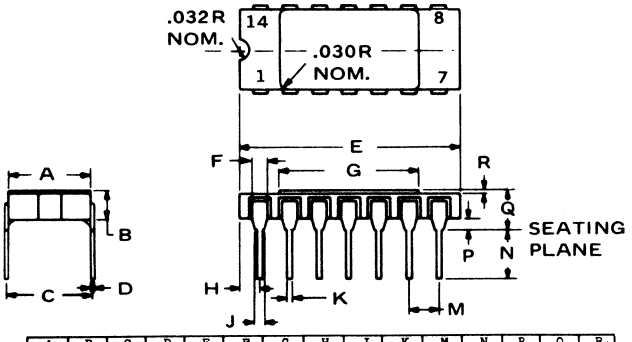

	A	B	C	D	E	F	G	H	J	K	M	N	P	Q	R
ML125	.375 .300	.110 MAX	.285 .315	.008 .014	.738 .758	.060 MAX	.478 NOM	.064 .094	.030 MIN	.015 .021	.100 T.P.	.150 MIN	.025 MIN	.160 MAX	.012 NOM
ML125a	.394 MAX	.133 MAX	.299	.009	.757 MAX	.049		.084 MAX		.018	.100	.133 .153	.020 MIN	.153 MAX	
ML125b	.310 MAX		.300 NOM	.008 .012	.660 .700					.014 .020	.100 TYP			.125 MAX	

ML126

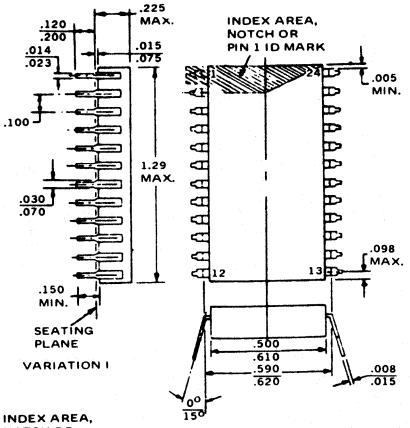

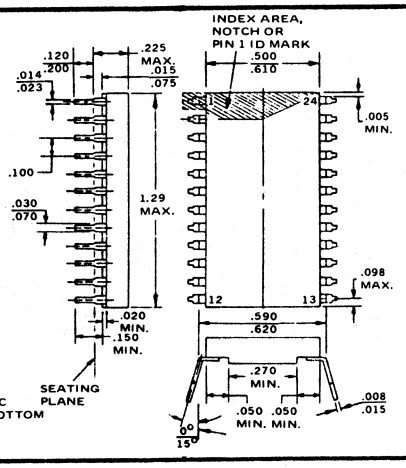

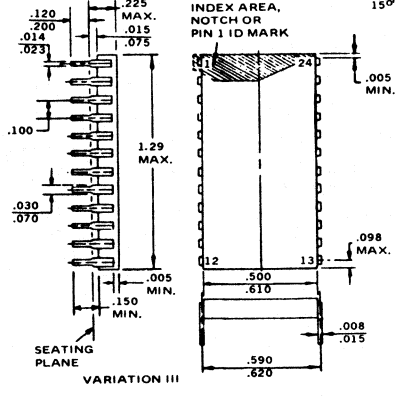

IF IT IS USED, NO ORGANIC OR POLYMERIC MATERIALS SHALL BE MOLDED TO THE BOTTOM OF THE PACKAGE TO COVER THE LEADS.

23. OUTLINE DRAWINGS

IN DRAWING NUMBER SEQUENCE

ML127

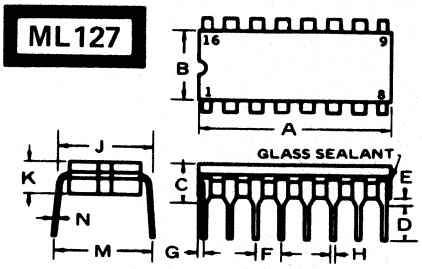

	A	B	C	D	E	F	G	H	J	K	M	N
ML127	.785 MAX	.280 MAX	.175	.130 MIN	.020	.090 .110	.050 MAX	.015 .023	.310 MAX	.160 MAX	.300 .370	.008 .014
ML127a		.290 .325	.220 MAX	.100 .150	.020 .060	.090 .110	.015 .065	.015 .023			.290 .410	.008 .014
ML127b	.750 .780	.245 .275	.160 .200	.125 .160	.020 .040	.100	.020 .045	.015 .020	.290 .310			.008 .012
ML127c	.787		.220 MAX			.100	.017		.290 MAX		.410	.009
ML127d	.760					.100	.017			.110	.300	.009
ML127e	.755 .785	.265 .291	.170 .219	.100 .165	.020 MIN	.090 .110	.015 .045	.016 .020			.375	.009 .011
ML127f	.785 MAX	.280 MAX	.270 MAX	.125 MIN	.020 .070	.090 .110	.050 MAX	.016 .020	.290 .320	.160 MAX	.360 .410	.008 .012
ML127j	.750 .785	.245 .271	.200 MAX	.125 MIN	.020	.090 .110	.015 .045	.016 .020	.325 MAX	.180 MAX	.400 MAX	.009 .011
ML127k	.750 .785	.265 .291	.200 MAX	.125 MIN	.080 .015	.090 .110	.010 MIN		.290 .320		.380 NOM	.009 .011
ML127m	.755 .785	.280 MAX	.105 .155	.125 .165	.020 .040	.090 .110	.015 .050	.015 .023	.290 .315		.325 .315	.200 .360
ML127r	.755 .785	.310 MAX	.165 .215	.125 .165	.020 .040	.090 .110	.015 .050	.015 .023	.290 .320	.145 .175		.008 .014
ML127s	.750 .785	.245 .271	.200 MAX	.100 .165	.015 MIN	.090 .110	.015 .045	.016 .020	.290 .310		.375 NOM	.009 .011
ML127t	.745 .785	.240 .275	.155 .200	.100 .160	.020 .050	.100 TYP	.015 .060	.014 .020	.300 TYP			.008 .012
ML127u	.745 .840	.240 .260	.155 .200	.115 .150	.020 .050	.100 TYP	.015 .072	.014 .020	.300 TYP			.008 .012
ML127x	.800 MAX		.208 MAX	.126 .165	.015 MIN	.100	.050 MAX	.015 .023	.325 MAX		.300 .393	.009

ML128

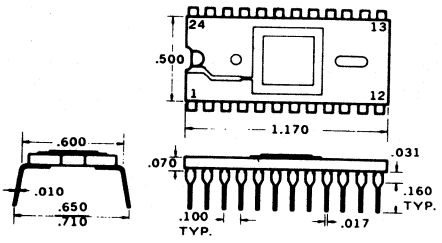

ML131

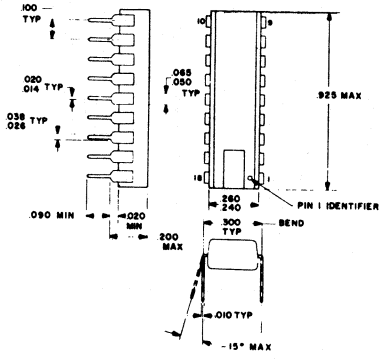

ML132

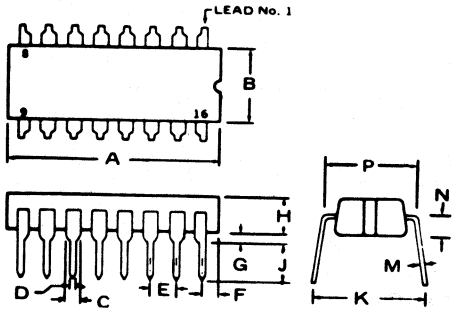

	A	B	C	D	E	F	G	H	J	K	M	N	P
ML132	.745 .755	.245 .252	.044 .052	.015 .021	.090 .110	.020 .030	.015 .035	.115 .125	.120 .135	.325 .375	.010 .015	.057 .068	.290 .310
ML132a	.750 .880	.235 .275	.030 .070	.015 .023	.090 .110		.020	.180 MAX	.125 MIN	.400 MAX	.008 .015		.325 MAX
ML132b	.748	.251	.045	.019	.100		.019 MIN	.181 MAX	.110	.300	.010		

ML133

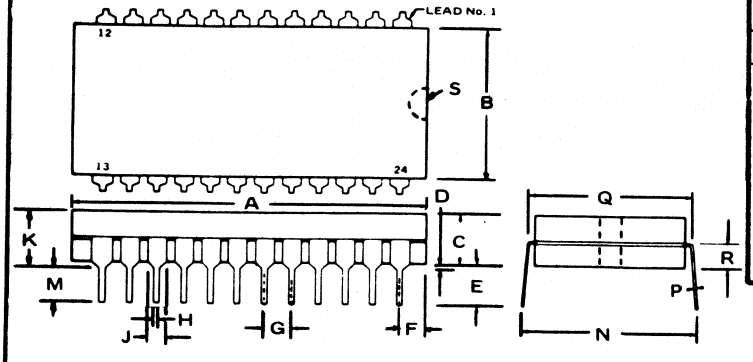

	A	B	C	D	E	F	G	H	J	K	M	N	P	Q	R	S
ML133	1.235 1.290	.560 MAX	.200 MAX	.020 MIN	.125 .140	.060 .100	.090 .110	.015 .023	.076 MAX			.600 .650	.008 .014	.590 .610	.100	NA
ML133a	1.290 MAX	.515 .525		.020 .070		.060 .100	.090 .110	.016 .020	.050 .080	.200 MAX	.125 MIN	.660 .710	.008 .012	.590 .620	.160 MAX	.025 RAD
ML133d	1.33 MAX	.531		.019 MIN			.100		.059	.199 MAX	.100 MIN		.009	.598		
ML133e	1.260 MAX	.600		.020 MIN		.080 MAX	.100	.018	.060 TYP	.200 MAX	.120 MIN	.625 TYP	.010 .012			NA
ML133g	1.235 1.290	.515 .570	.140 .190	.025 .063			.090 .110	.016 .020	.045 .065		.100 .200	.750 MAX	.009 .011	.600 NOM		.020 .030
ML133h	1.200 MAX	.380 NOM	.140 .190	.020 MIN			.090 .110	.016 .020	.045 .065		.115 .135	.500 MAX	.009 .011	.400		.035 .045

23. OUTLINE DRAWINGS

IN DRAWING NUMBER SEQUENCE

ML134

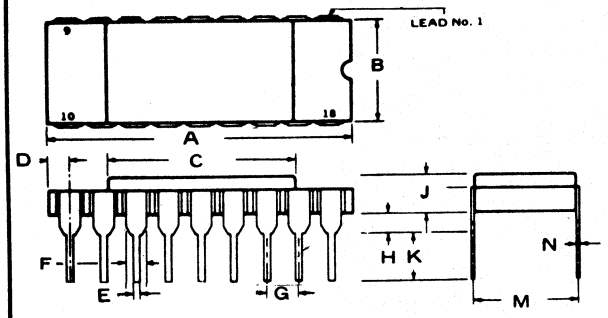

	A	B	C	D	E	F	G	H	J	K	M	N
ML134	.890 .930	.280 .310	.420 .470	.030 .065	.015 .021	.045 .060	.090 .110	.030 .070	.080 .120	.100 .140	.290 .320	.008 .012
ML134a	.921 MAX	.294 MAX		.059 MAX	.053	.020	.100	.029	.147 MAX	.133 .153	.299	.009
ML134b	.890 .910	.278 .298			.015 .021		.090 .110	.025 .045	.105 MAX	.135 .155	.300	.008 .012
ML134c	.890 .910	.278 .298			.020 TYP	.040 TYP	.095 .105	.040 .060		.170 .190	.300 .320	.010 TYP
ML134e	.890 .920	.300 .320			.018 .020	.051 .057	.090 .110	.025 .035	.095 .105	.125 .135	.300 .330	.009 .011
ML134f	.900 TYP	.285 TYP			.016 .023	.043 .060	.100 TYP	.040 TYP	.150	.125	.300	.008 .012
ML134h	.870 .910	.250 .300			.014 .024	.052 .054	.090 .110	.015 MIN	.140 .170	.100 MIN	.300 .400	
ML134J	.890 .930	.280 .310	.490 .510	.030 .065	.015 .021	.045 .060	.090 .110	.025 .055	.080 .120	.125 .175	.280 .344	.008 .012
ML134k	.890 .910	.278 .298			.015 .021		.090 .110	.025 .065	.125 MAX	.100 .150	.300	.008 .012

ML135

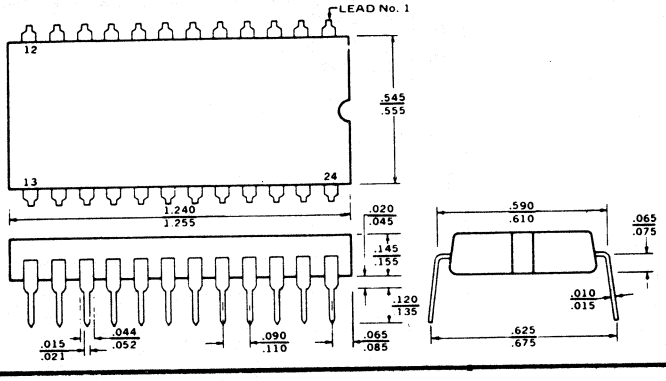

ML137

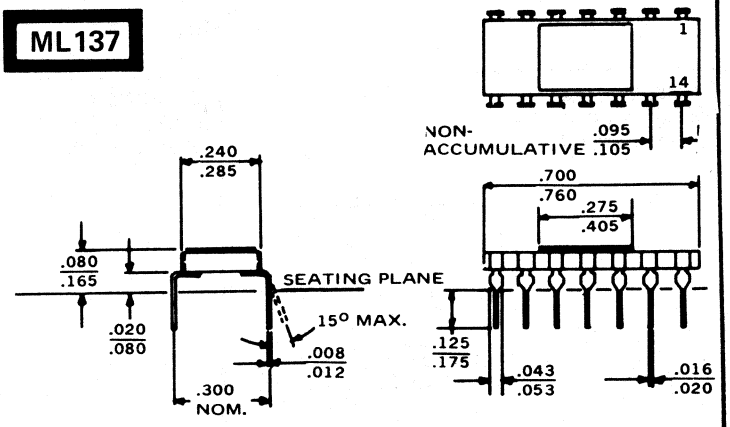

ML140

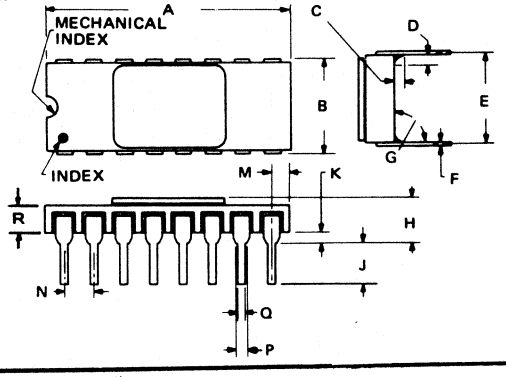

	A	B	C	D	E	F	G	H	J	K	M	N	P	Q	R	REMARK
ML140	.830 MAX	.285 .325	.020 MAX	.040 MAX	.290 .310	.008 .012	90° 105°	.200 MAX	.125 .150	.020 MIN	.015 .090	.090 .110	.027 .030	.015 .023		
ML140b	.790 .820	.285 .315			.280 .300	.008 .014		.170 MAX	.140 MIN	.020 MIN	.032 .072	.100 TP	.030 MIN	.015 .021		
ML140d	.795 .807				.279 .316	.008 .012	90°	.133 .157	.125 MIN	.035 .043	.051		.314	.017 .018		
ML140e	.760 .800	.275 .291			.290 .310	.008 .012	90° 99°	.160 MAX	.120 .140	.020 .043	.050	.090 .110	.032	.015 .023	.070 .088	NO INDEX DOT

ML142

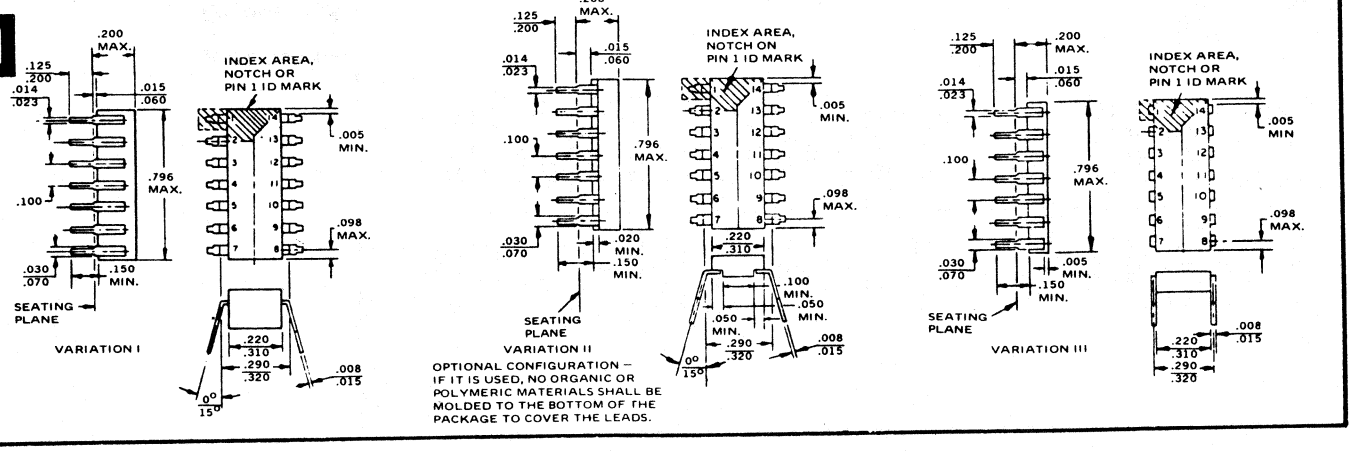

ML143

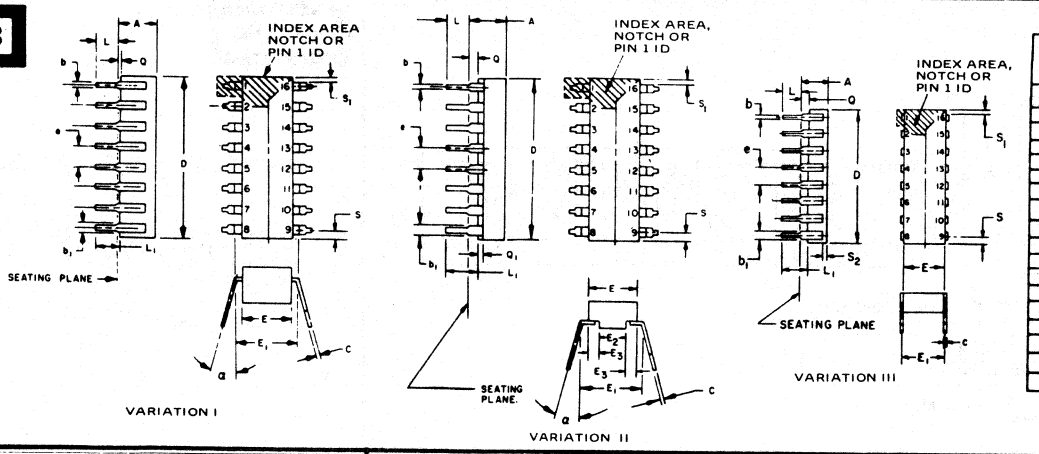

SYMBOL	INCHES		MILLIMETERS	
	MIN	MAX	MIN	MAX
A		.200		5.08
b	.014	.023	.36	.58
b_1	.030	.070	.76	1.78
c	.008	.015	.20	.38
D		.840		21.34
E	.220	.310	5.59	7.87
E_1	.290	.320	7.37	8.13
E_2	.100		2.54	
E_3	.050		1.27	
e	.100 BSC		2.54 BSC	
L	.125	.200	3.18	5.08
L_1	.150		3.81	
Q	.015	.060	.38	1.52
Q_1	.020		.51	
S		.080		2.03
S_1	.005		.13	
S_2	.005		.13	
α	0°	15°	0°	15°

ML145

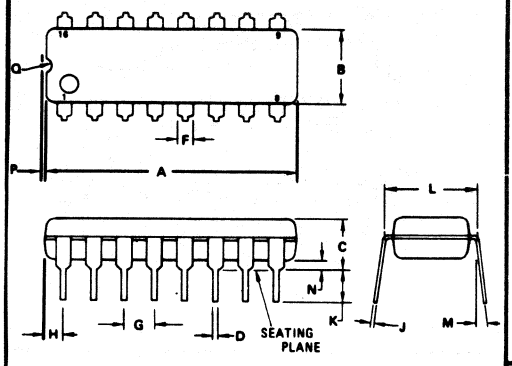

DIM	MILLIMETERS		INCHES	
	MIN	MAX	MIN	MAX
A	20.70	21.34	0.815	0.840
B	6.10	6.60	0.240	0.260
C	4.06	4.57	0.160	0.180
D	0.38	0.51	0.015	0.020
F	1.02	1.52	0.040	0.060
G	2.54 BSC		0.100 BSC	
H	1.32	1.83	0.052	0.072
J	0.20	0.30	0.008	0.012
K	2.92	3.43	0.115	0.135
L	7.37	7.87	0.290	0.310
M	–	10°	–	10°
N	0.51	1.02	0.020	0.040
P	0.13	0.38	0.005	0.015
Q	0.51	0.76	0.020	0.030

NOTES:
1. LEADS WITHIN 0.13 mm (0.005) RADIUS OF TRUE POSITION AT SEATING PLANE AT MAXIMUM MATERIAL CONDITION.
2. DIMENSION "L" TO CENTER OF LEADS WHEN FORMED PARALLEL

ML146

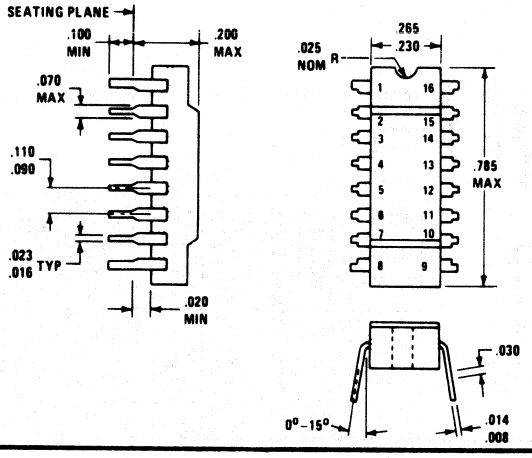

ML147

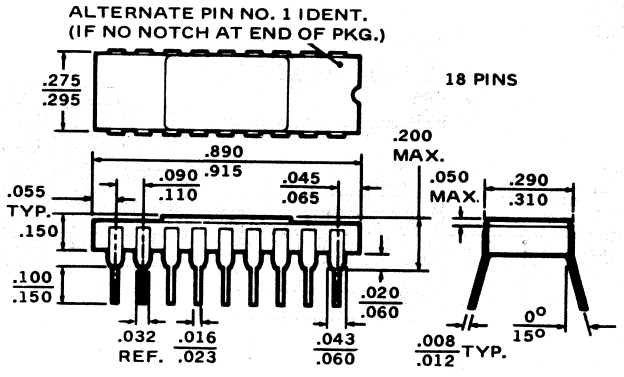

ML148

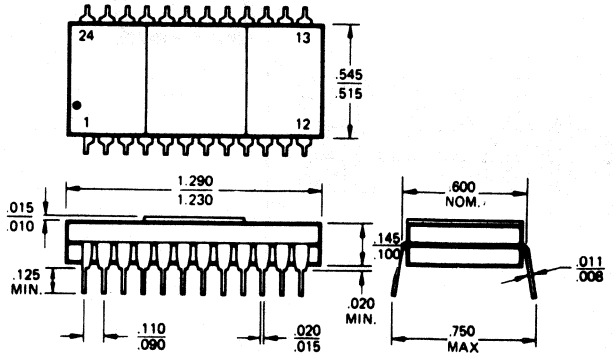

23. OUTLINE DRAWINGS

IN DRAWING NUMBER SEQUENCE

ML150

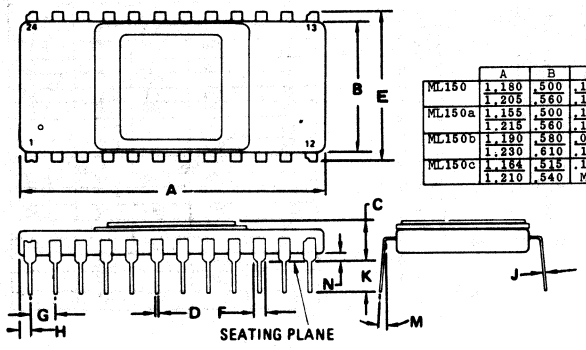

	A	B	C	D	E	F	G	H	J	K	M	N
ML150	1.180 1.205	.500 .560	.120 .180	.015 .020	.598 .622	.040 .060	.100	.042 .052	.008 .012	.115 .165	10°	
ML150a	1.155 1.215	.500 .560	.120 .155	.015 .020	.585 .625	.035 .055	.100	.035 .055	.008 .012	.115 .145	15°	
ML150b	1.190 1.230	.580 .610	.080 .120	.015 .021			.090 .110	.030 .065	.008 .012	.125 .150	0°	.030 .070
ML150c	1.184 1.210	.515 .540	.100 MAX	.010 .020	.600 MAX	.010 .020	.100 TYP		.013 .017	.125 .200	15° MAX	.015 .080

ML154

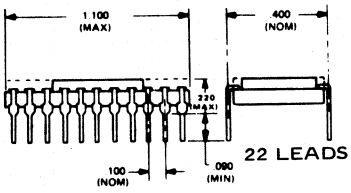

ML157

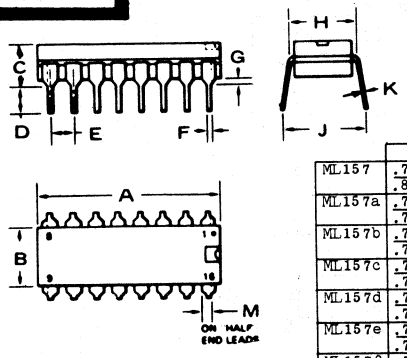

	A	B	C	D	E	F	G	H	J	K	M
ML157	.750 .865	.240 .260	.200 MAX	.100 .150	.090 .110	.016 .020	.015 .050	.300	.375	.008 .012	.035 .055
ML157a	.750 .785	.240 .295	.200 MAX	.100 MIN	.100	.015 .021	.020 .040	.295 .350		.008 .012	
ML157b	.745 .785	.240 .260	.120 .200	.125 .150	.100	.014 .020	.020 .065	.300 .325	.300	.008 .012	
ML157c	.740 .780	.250 .300	.200 MAX	.100 MIN	.090 .110	.014 .023	.015 MIN	.325 MAX	.300 .400	.008 .015	
ML157d	.745 .785	.245 .271	.200 MAX	.100 .165	.090 .110	.016 .020	.015 MIN	.290 .310	.375 NOM	.009 .011	
ML157e	.755 .785	.245 .271	.200 MAX	.100 .165	.090 .110	.016 .020	.015 MIN	.290 .310	.375 NOM	.009 .011	
ML157f	.755 .785	.265 .291	.170 .219	.100 .165	.090 .110	.016 .020	.020 MIN	.290 .310	.375 NOM	.009 .011	

ML158

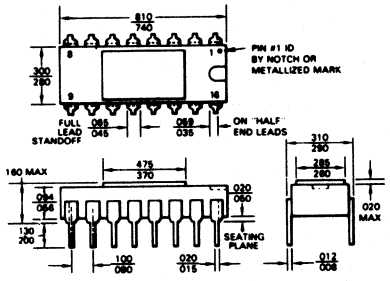

ML161

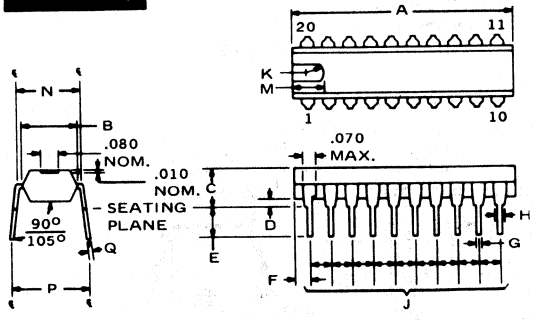

	A	B	C	D	E	F	G	H	J	K	M	N	P	Q	REMARKS
ML161	1.070 MAX	.240 .260	.200 MAX	.020 MIN	.125 .155	.075 MAX	.015 .021	.033 MIN	.100	.093	.160	.290 .310	.300 .350	.008 .014	Notch
ML161a	1.015 1.025	.255 .265	.200 MAX		.125 MIN		.018 .022	.045 .065	.090 .110			.290 .310	.325 .375		Notch
ML161c	1.010 MAX	.300 MAX	.175 MAX												Notch
ML161f	1.070 MAX	.270 MAX	.200 MAX	.020 MIN	.125 MIN		.015 .021	.033	.100			.325 MAX		.008 .014	Either Notch Or Groove
ML161g	1.000 1.040	.250 .290	.150 .200	.015 .060	.125 .150		.015 .020		.090 .110				.310 .385	.009 .011	Notch

ML162

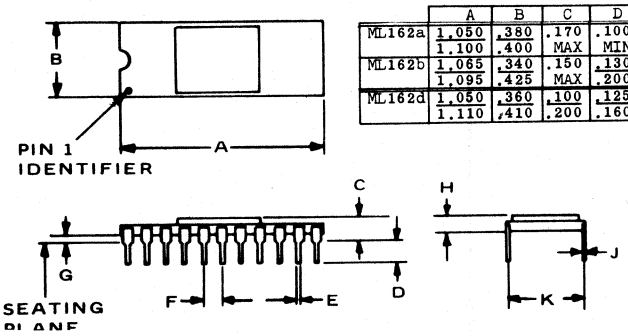

	A	B	C	D	E	F	G	H	J	K
ML162a	1.050 1.100	.380 .400	.170 MAX	.100 MIN	.014 .023	.090 .110	.015 MIN	.065 .135	.008 .015	.380 .480
ML162b	1.065 1.095	.340 .425	.150 MAX	.130 .200	.015 .021	.090 .110			.008 .012	.400 REF
ML162d	1.050 1.110	.360 .410	.100 .200	.125 .160	.015 .022	.090 .110	.020 .060		.008 .013	.390 .420

23. OUTLINE DRAWINGS

IN DRAWING NUMBER SEQUENCE

ML163

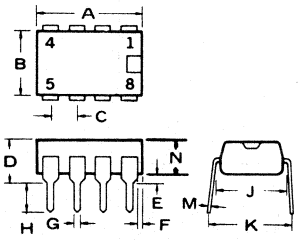

	A	B	C	D	E	F	G	H	J	K	M	N
ML163	.375 .385	.245 .255	.090 .110	.200 MAX	.020 TYP	.010 MIN	.018 .022	.120 MIN	.290 .310	.325 .375	.009 .011	
ML163a	.370 .390	.248 .252		.148 MIN	.020			.125 MIN	.305 .315	.300 .350	.009 .011	.128 .138
ML163b	.365 .375	.245 .252			.020 .030		.015 .021	.120 .135	.290 .310	.300 .395	.010 .015	.115 .125

ML164

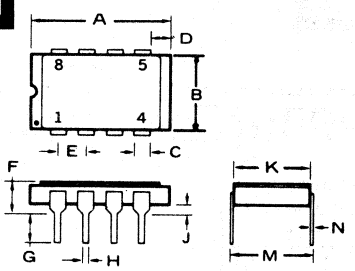

	A	B	C	D	E	F	G	H	J	K	M	N
ML164	.530 MAX		.040 .060	.010 MIN	.090 .110	.105 .155	.125 .200	.017 .023	.020 .080	.290 .310	.290 .320	.008 .015
ML164a	.535 MAX	.320 MAX			.095 .105	.194 MAX	.130 TYP		.015 MIN	.300 TYP	.294 .400	

ML165

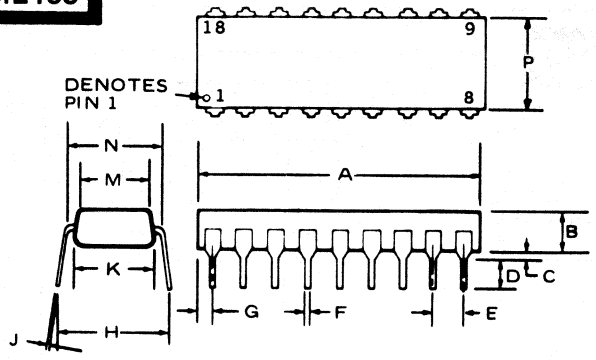

	A	B	C	D	E	F	G	H	J	K	M	N	P
ML165	.920 MAX	.180 MAX	.020 MIN	.120 MIN	.100 TYP	.018 TYP	.050 TYP	.350 TYP	.009 .011	.250 TYP	.220 TYP	.300 TYP	
ML165a	.915 .925	.115 .125	.015 .035	.100 .105	.090 .110	.015 .020	.060 .070	.325 .375	.010 .015			.290 .310	
ML165b	.865 MAX		.040 TYP	.130	.092 .108	.020 TYP	.020 TYP		.010 TYP		.235	.300 TYP	.250
ML165c	.897 TYP		.019 MIN	.100 MIN	.100 TYP	.018							.300 TYP
ML165d	.900	.140	.030	.110	.100 TYP	.020 TYP						.290	.250
ML165e	.866	.180 MAX	.020 MIN	.100 MIN	.090 .110	.015 .023			.007 .014			.300	.248
ML165f	.890 .920	.120 .140	.020 .060	.125 .150	.090 .110	.015 .023	.040 .065	.290 .400	.008 .015			.290 .310	.245 .255
ML165g	.925	.162	.016	.100	.100	.020			.024		.268	.300	.268

ML168

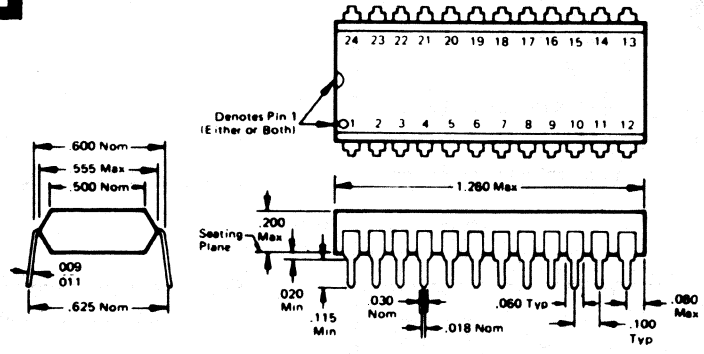

ML170

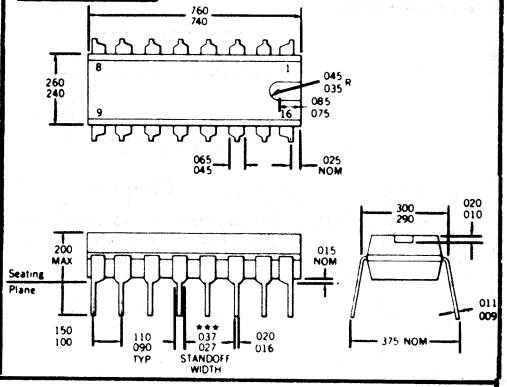

ML171

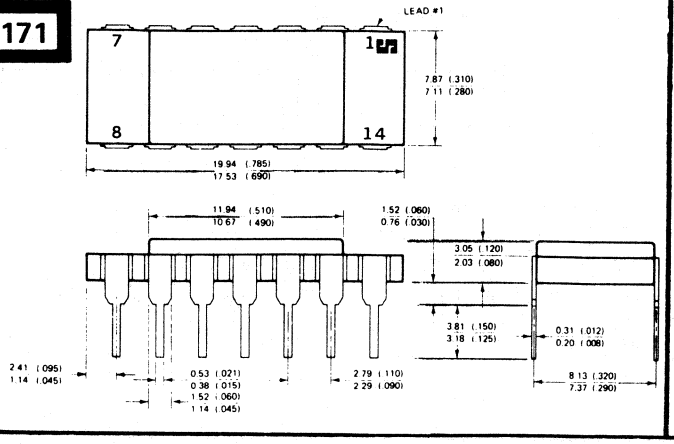

ML172

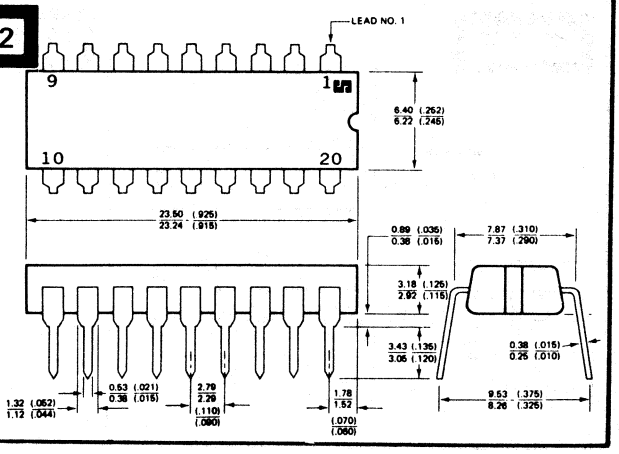

23. OUTLINE DRAWINGS

IN DRAWING NUMBER SEQUENCE

ML173

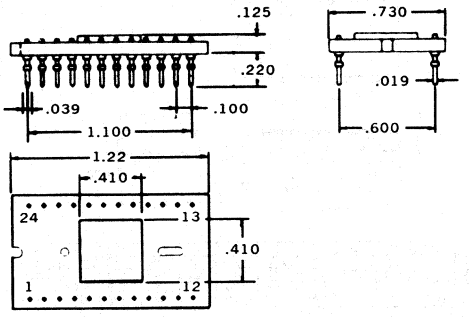

ML174

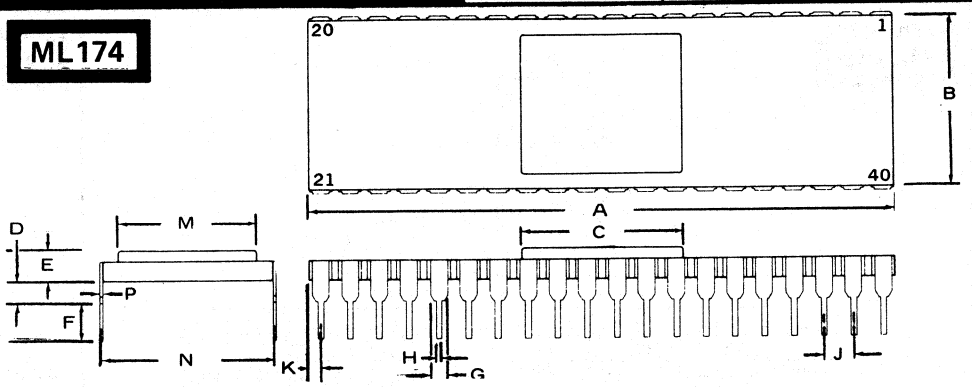

	A	B	C	D	E	F	G	H	J	K	M	N	P
ML174	1.980	.580	.480	.030	.080	.125	.045	.015	.090	.030	.480	.590	.008
	2.030	.610	.510	.070	.120	.150	.060	.021	.110	.065	.510	.620	.012
ML174a	1.950	.570		.035		.125	.030	.016	.090			.590	.008
	2.050	.600		.055	.120	.180	.050	.020	.110	.098		.610	.012

ML175

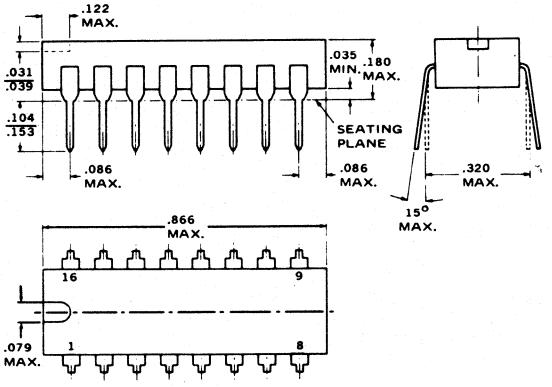

ML176

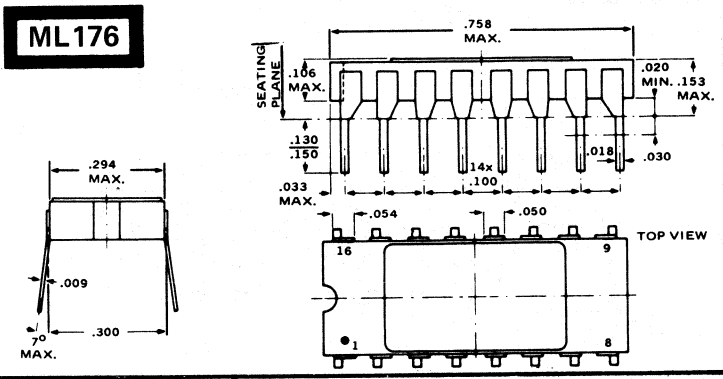

ML177

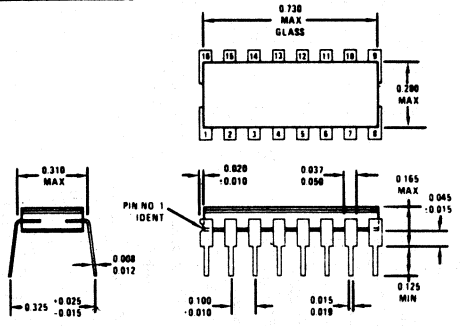

ML178

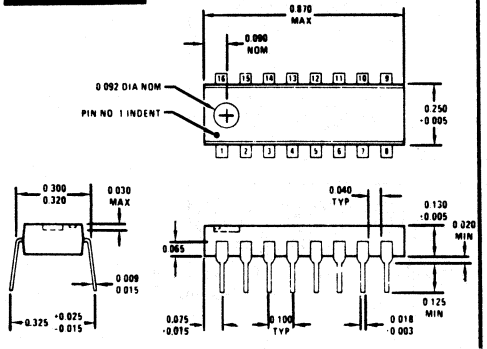

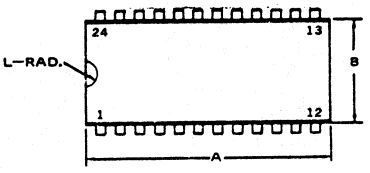

ML180

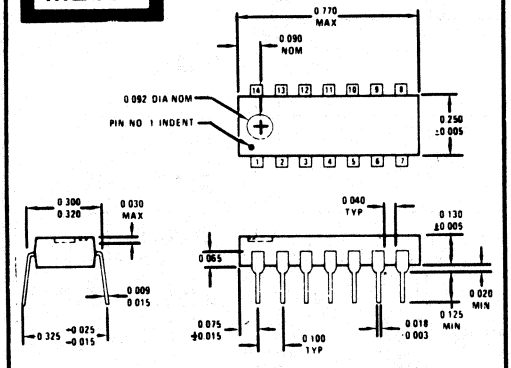

ML183

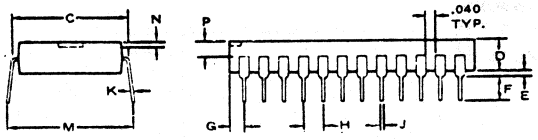

	A	B	C	D	E	F	G	H	J	K	L	M	N	P
ML183	1.270	.540	.600	.155	.015	.125	.060	.100	.003	.009	.062	.610	.030	.075
	MAX	.550	.620	.165	MIN	MIN	.090	TYP	.018	.015	RAD	.650	MAX	
ML183a	1.290	.515	.590	.160	.020	.125	.060	.090	.002	.008	.025	.660		
	MAX	.525	.620	MAX	.070	MIN	.100	.110	.018	.012	RAD	.710		
ML183b	1.230	.530	.625	.150	.015	.100		.090	.014	.008		.630		
	1.250	.550		.160	MIN	.165		.110	.023	.015		.700		
ML183c	1.290	.500	.590		.015	.120	.098	.100	.014	.008				
	MAX	.610	.620		.075	.200	MAX	.	.023	.015				

23. OUTLINE DRAWINGS

IN DRAWING NUMBER SEQUENCE

ML184

	A	B	C	D	E	F	G	H	J	K	L	M	N	P
ML184a	1.220 MAX	.595 MAX	.520 SQUARE	.165 MAX	.020 .060	.125 MIN	.600 REF	.090 .110	.015 .020		.050 TYP			
ML184b	1.230 MAX	.600 TYP		.160 MAX	.040 MIN	.125 MIN		.100 TYP	.018 TYP	.010 .012		.070 MAX		.625 TYP

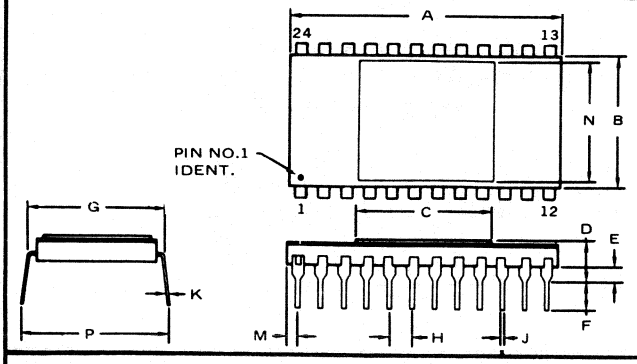

ML187

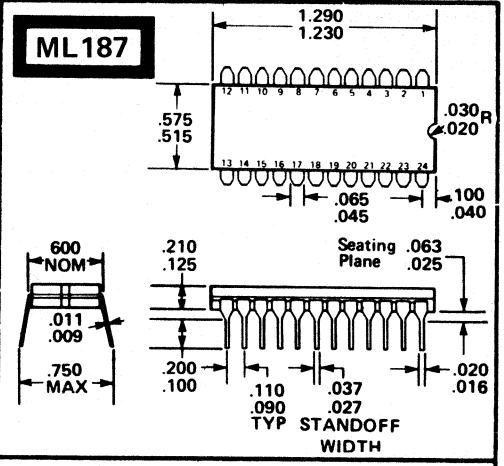

ML188

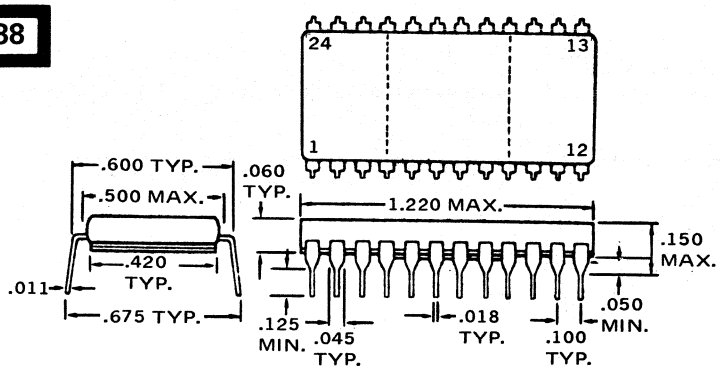

ML192

	A
ML192	1.490 1.510
ML192a	1.385 1.425

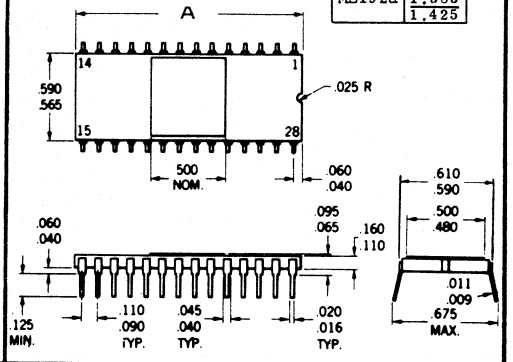

ML191

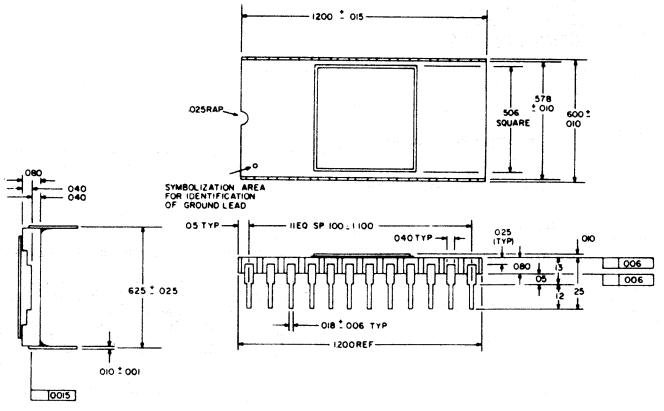

ML193

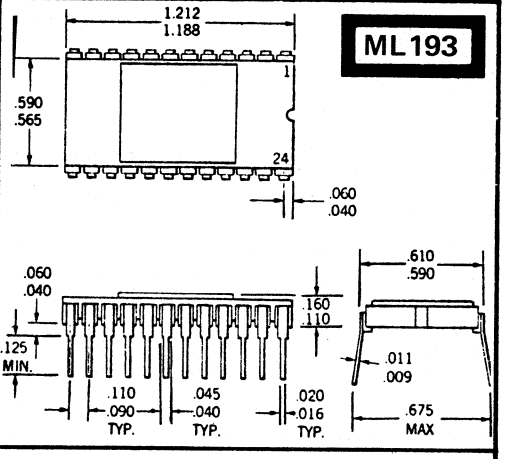

ML194

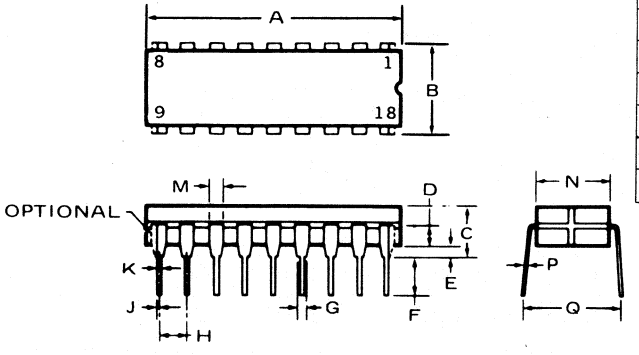

	A	B	C	D	E	F	G	H	J	K	M	N	P	Q
ML194	.850 .930	.290 .325	.220 MAX	.070 .110	.020 .050	.100 .150	.032	.090 .110	.007 .011	.015 .023	.045 .070	.240 .295	.008 .012	.290 .410
ML194a	.913 MAX	.299	.200 MAX		.019 MIN	.098 MIN		.099		.017	.047	.263	.009	
ML194b	.832 .928	.300	.190 MAX		.030	.130 MIN		.100 TYP		.018 TYP	.060 TYP	.290 MAX	.008 .012	
ML194c	.880 .930	.290 .310	.190 MAX		.015 .035	.100 .165		.090 .110		.016 .020	.055 .065	.265 .291	.008 .012	
ML194d	.880 .900		.170 .219		.020 MIN	.100 .165	.027 .037	.090 .110		.016 .020	.045 .065	.265 .291	.009 .011	.375 TYP
ML194e	.915 MAX	.290 MAX	.200 MAX		.020 .070	.125 MIN		.100 TYP		.018 TYP	.060 TYP		.008 .012	.385 TYP
ML194f	.940 MAX		.200 MAX		.015 .060	.120 .200		.100		.014 .023	.030 .070	.310 MAX	.008 .015	.290 .320

23. OUTLINE DRAWINGS

IN DRAWING NUMBER SEQUENCE

ML195

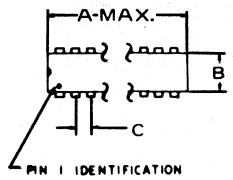

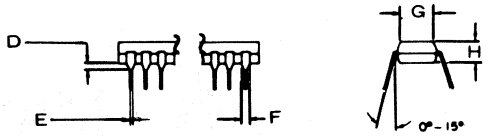

	A	B	C	D	E	F	G	H	No. of Pins
ML195	2.40 MAX	.625	.100	.015 TYP	.017 TYP	.050 TYP	.515	.145	48
ML195a	2.40	.590	.100	.050	.018		.610	.130	48

ML196

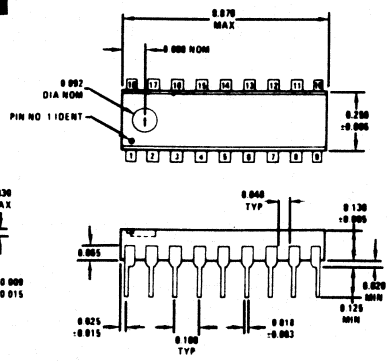

ML197

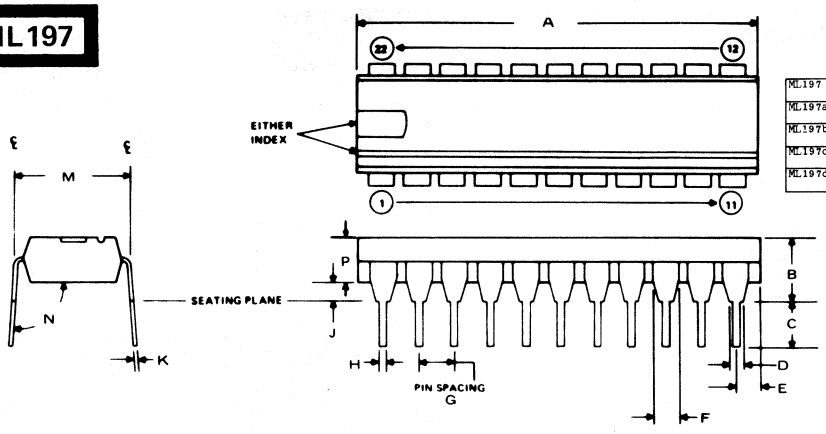

	A	B	C	D	E	F	G	H	J	K	M	N	P	REMARKS
ML197	1.120 MAX		.125 MIN		.035 .065		.090 .110	.015 .021	.020 MIN	.009 .015	.400 .420		.125 .135	DOT AND NOTCH
ML197a	1.100 MAX	.200 MAX	.125 MIN	.033 MIN	.030 .070	.060	.100	.015 .021	.020 MIN	.008 .014	.390 .410	90° 105°		EITHER INDEX
ML197b	1.120 MAX	.200 MAX	.125 MIN	.033 NOM		.070 MAX	.100 NOM	.015 .021	.020 MIN	.008 .014	.425 MAX	90° 105°		EITHER INDEX
ML197c	1.090 1.110		.100 .150			.060 TYP	.100 TYP	.032 TYP	.020 MIN	.010 REF	.400		.140 .160	NOTCH ONLY
ML197d	1.080 1.120	.150 .200	.125 .160			.055 .065	.090 .110	.015 .020	.015 .060	.009 .011	.410 .480			NOTCH ONLY

ML199

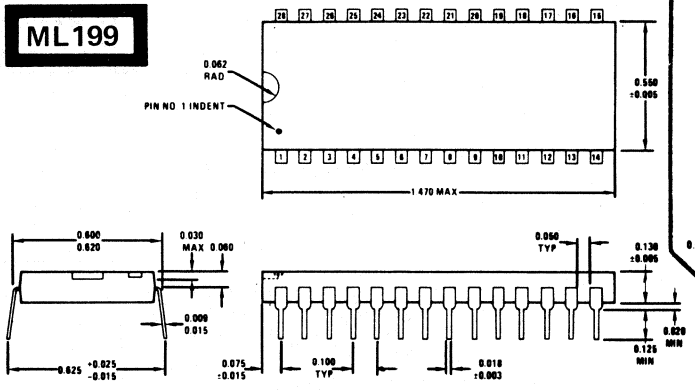

ML200

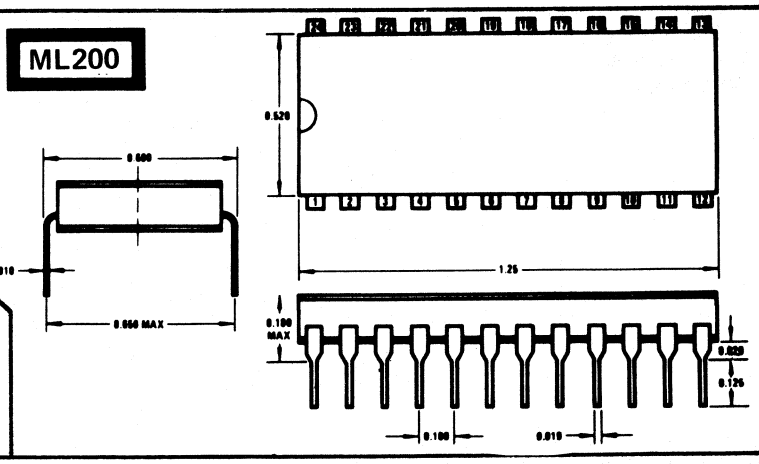

ML202

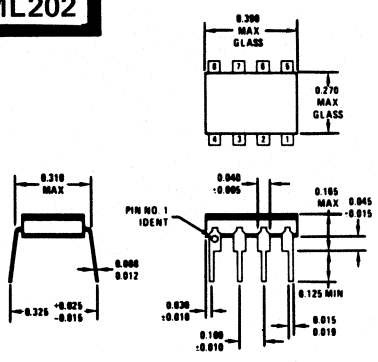

ML204

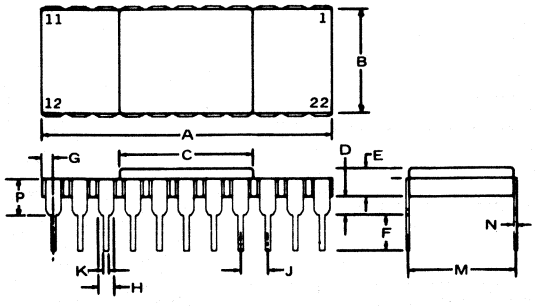

	A	B	C	D	E	F	G	H	J	K	M	N	P
ML204	1.040 1.100	.380 .410	.490 .510	.030 .070	.080 .120	.125 .150	.030 .065	.045 .060	.090 .110	.015 .021	.390 .420	.008 .012	
ML204a	1.100 MAX	.395 MAX	.450 MAX	.020 .060	.080 .120	.125 MIN		.050 TYP	.090 .110	.017 .023	.400	.008 .012	.165 MAX

23. OUTLINE DRAWINGS

IN DRAWING NUMBER SEQUENCE

ML205

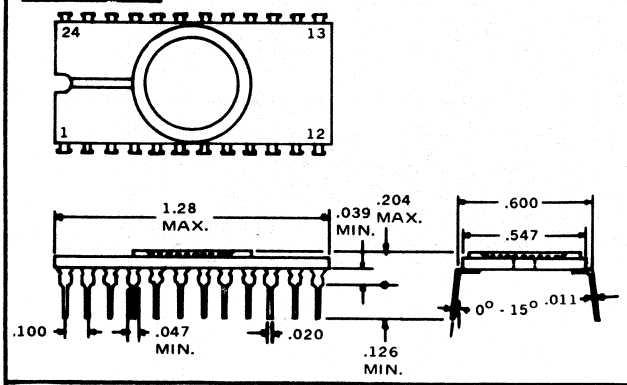

ML206

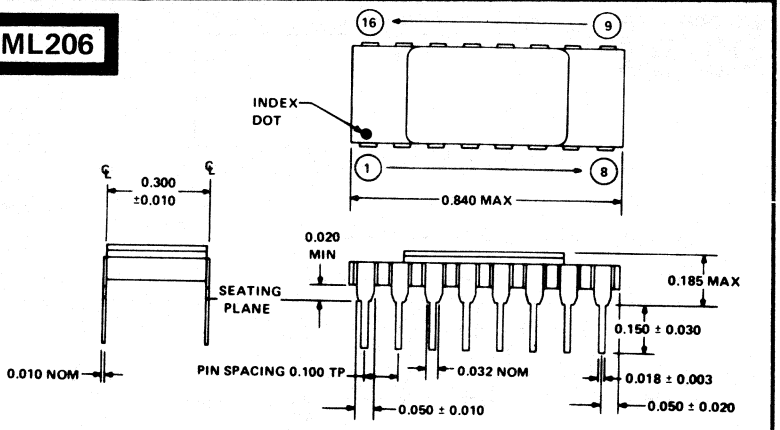

ML207

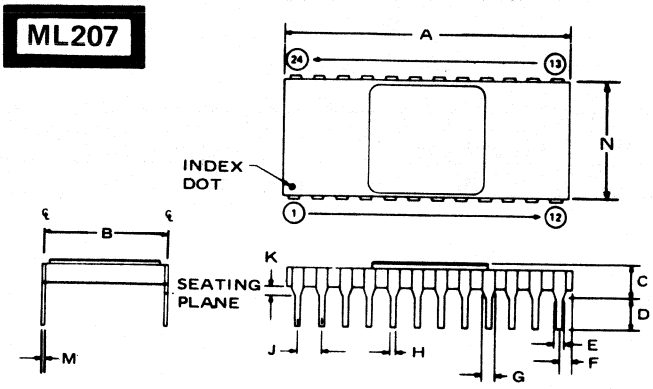

	A	B	C	D	E	F	G	H	J	K	M	N	REMARKS
ML207	1.290 MAX	.590 .610	.185 MAX	.120 .180	.032 NOM	.030 .070	.040 .060	.015 .021	.100 TYP	.020 MIN	.010 NOM		DOT
ML207a	1.185 1.216	.600	.196 MAX	.118 .141			.038 .044	.015 .023	.090 .109	.040 .059	.008 .012		DOT
ML207b	1.180 1.220	.585 .605	.120 .165	.100 .165		.030 .070		.015 .021	.100 TYP	.020 .060	.008 .012		DOT
ML207c	1.150 1.215	.600 .600	.080	.125 .175	.043 .053			.014 .020	.095 .105	.020 .080	.008 .012		DOT
ML207d	1.290 MAX	.600		.125 MIN		.040 .060	.050 TYP	.016 .020	.090 .110	.020 .060	.008 .012		DOT
ML207e	1.186 1.214	.590 .610	.200 MAX	.120 .140		.035 .055	.036 .044	.015 .023	.090	.040 .060	.008 .012	.578 .598	
ML207f	1.212 MAX		.160 MAX	.125 MIN		.050 TYP	.040 TYP	.020 TYP	.100 TYP	.040 MIN	.009 .011		
ML207g	1.178	.600	.199 MAX	.100 MIN			.050	.014 .022	.090 .109	.019 MIN	.007 .011	.586	NOTCH
ML207h	1.178	.600	.199 MAX	.100 MIN			.050	.014 .022	.090 .109	.019 MIN	.007 .011	.586	NOTCH AND CONN
ML207j	1.188 1.212	.600	.132 .178	.160 TYP	.040 TYP			.016 .020	.098 .102	.040 .060			NOTCH AND CONN
ML207k	1.290 MAX	.590 .610	.200 MAX	.125 MIN			.070 MAX	.015 .021	.100	.020 MIN	.008 .014	.595	DOT, TRIANGLE OR NUM
ML207m	1.200	.600		.175	.050			.018	.100		.010		NOTCH

ML209

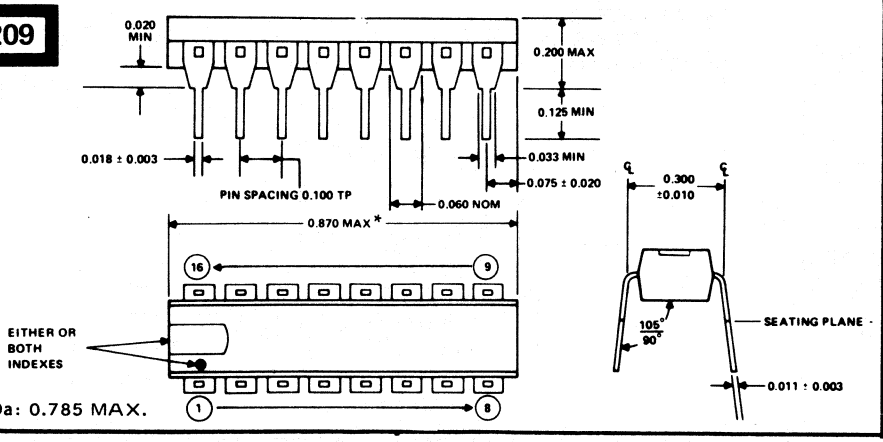

*ML209a: 0.785 MAX.

ML210

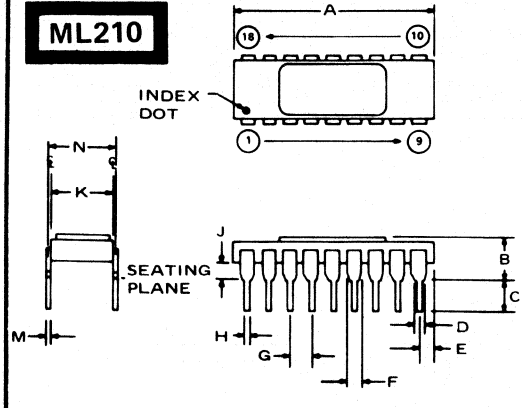

	A	B	C	D	E	F	G	H	J	K	M	N
ML210	.910 MAX	.185 MAX	.120 .180	.032	.030 .070	.040 .060	.100 TYP	.015 .021	.020 MIN	.290 .310	.010	
ML210a	.880 .920	.168 MAX	.125 .160				.090 .110	.016 .020	.025 .045		.008 .012	.300 .320
ML210b	.890 .910	.150 MAX	.090 .130					.015 .021	.025 .045	.278 .298	.008 .012	.300
ML210c	.880 .920	.160 MAX	.130 .170			.045 .065	.090 .110	.015 .020	.020 .050		.008 .012	.290 .310
ML210d	.910 MAX	.200 MAX	.125 MIN			.070 MAX	.100 TYP	.015 .021	.020 MIN	.295 TYP	.008 .014	.290 .310

23. OUTLINE DRAWINGS

IN DRAWING NUMBER SEQUENCE

ML212

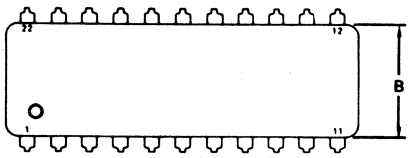

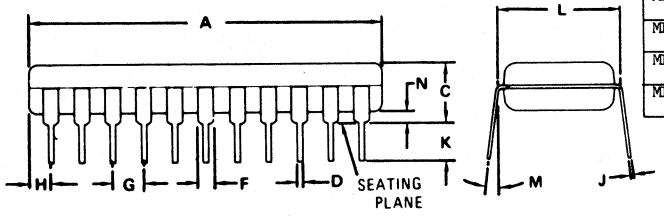

	A	B	C	D	F	G	H	J	K	L	M	N
ML212	1.135 1.165	.340 .360	.180 .200	.014 .020	.040 .060	.095 .105	.070 .080	.008 .012	.120 .140	.380 .400	0° 10°	.020 .040
ML212a	1.000 1.170	.340 .360	.170 .200	.014 .022	.030 .060	.095 .105	.040 .080	.008 .012	.100 .140	.380 .400	0° 15°	.020 .040
ML212b	1.200 MAX	.400 MAX	.190 MAX									
ML212c	1.100	.345		.020 TYP	.035 TYP	.100 TYP			.100 MIN	.400		.035 TYP
ML212d	1.066	.346	.200 MAX	.015 .023	.051	.090 .110		.007 .014	.100 MIN	.400	0° 15°	.020 MIN
ML212e	1.095 1.105	.345 .352	.160 .190	.015 .021	.044 .052	.090 .110	.040 .060	.010 .015	.120 .135	.390 .410		.015 .035
ML212f	1.100 1.170	.340 .360	.170 .200	.014 .022	.040 .070	.095 .105	.040 .080	.008 .012	.100 .135	.360 .400		.020 .040
ML212g	1.085 1.115	.340 .360	.155 .173	.014 .022	.050 .070	.100	.040 .060	.008 .015	.115 .135	.400	0° 15°	.020 .040

ML213

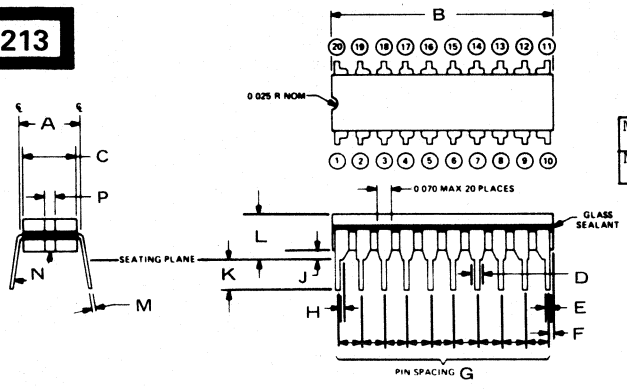

	A	B	C	D	E	F	G	H	J	K	L	M	N	P
ML213	.290 .310	.930 .975	.245 .300	.030 MIN	.015 .023	.015 .050	.100 TYP	.012 MIN	.020 MIN	.130 MIN	.170 MAX	.008 .014	90° 105°	.050
ML213a	.310 MAX	1.070 MAX	.310 MAX	.070 MAX	.015 .021		.100 TYP		.015 MIN	.125 MIN	.200 MAX	.008 .014	90° 105°	

ML214

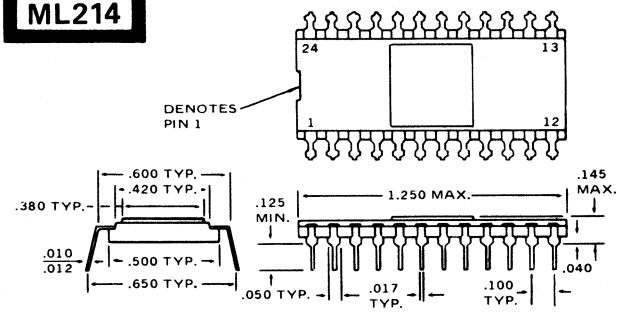

ML216

	A	B	C	D	E	F	G	H	J	K	M	N	P	Q
ML216	1.240 1.260	.540 .560	.145 .165	.115 .135	.090 .110	.027 .037	.016 .020	.020 MIN	.045 .065	.065 .090	.035 .045	.600 NOM	.009 .011	.700 MAX
ML216a	1.198 MAX		.177 MAX	.118 MIN	.100 TYP			.020 MIN	.050 .062	.049 MAX	N.A.	.600 TYP	.009 .014	.600 .654
ML216b	1.245 1.255	.545 .560	.160 MAX	.130 TYP	.095 .105	.040 .050	.015 .020	.020 MIN			.030R	.600 TYP		

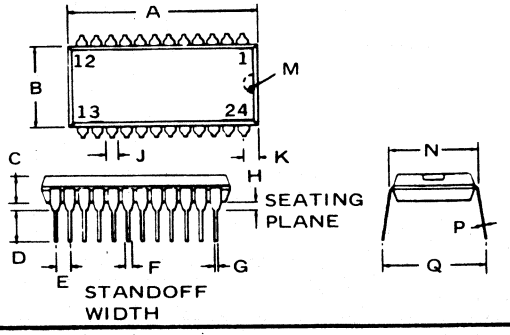

ML217

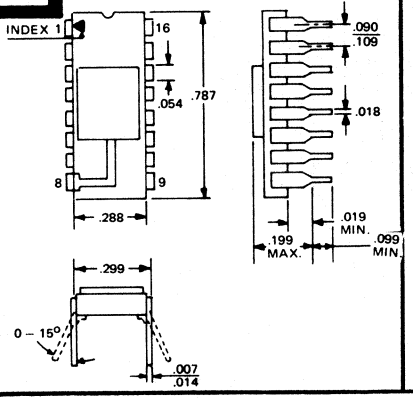

ML218

	A	B	C	D	E	F	G	H	J	K	M	N	P
ML218	1.380 1.430	.580 .610	.480 .510	.080 .120	.030 .070	.125 .150	.030 .065	.045 .060	.090 .110	.015 .021	.008 .012	.590 .620	
ML218a	1.415 MAX	.590 TYP	.493 TYP		.035 MIN	.125 MIN	.050 TYP	.050 TYP	.100 TYP	.017 TYP	.009 .012	.600	.165 MAX
ML218b	1.380 1.430	.580 .610	.510 .530	.080 .120	.030 .070	.125 .175	.030 .065	.045 .060	.090 .011	.015 .021	.008 .012	.580 .644	

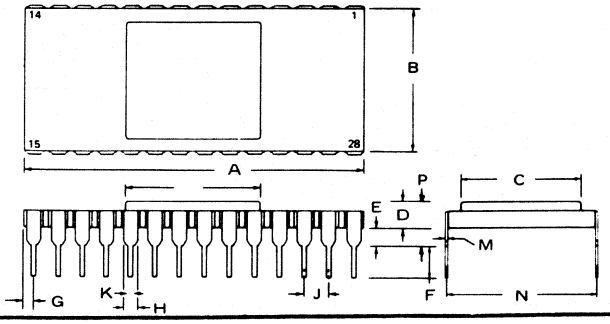

23. OUTLINE DRAWINGS

IN DRAWING NUMBER SEQUENCE

ML219

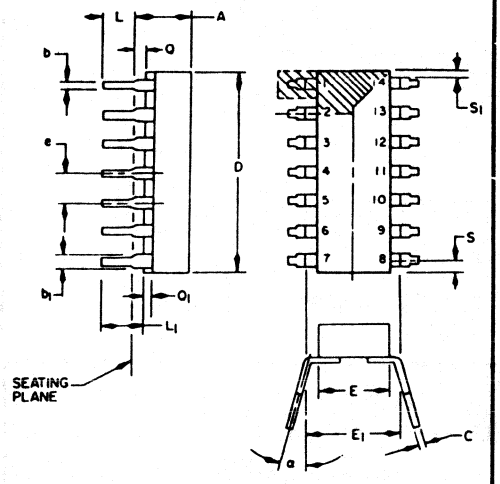

SYMBOL	INCHES		MILLIMETERS	
	MIN	MAX	MIN	MAX
A		.200		5.08
b	.014	.023	.36	.58
b_1	.030	.070	1.02	1.78
c	.008	.015	.20	.38
D		.796		20.22
E	.220	.310	5.59	7.87
E_1	.290	.320	7.37	8.13
e	.100 BSC		2.54 BSC	
L	.125	.200	3.18	5.08
L_1	.150		3.81	
Q	.015	.060	.38	1.52
Q_1	.020		.51	
S		.098		2.49
S_1	.005		.13	
α	0°	15°	0°	15°

ML220

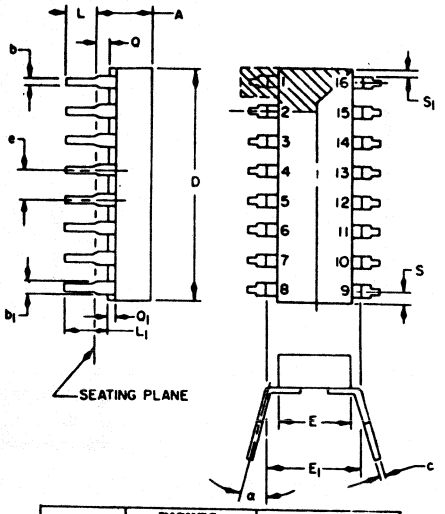

SYMBOL	INCHES		MILLIMETERS	
	MIN	MAX	MIN	MAX
A		.200		5.08
b	.014	.023	.36	.58
b_1	.030	.070	1.02	1.78
c	.008	.015	.20	.38
D		.898		22.76
E	.220	.310	5.59	7.87
E_1	.290	.320	7.37	8.13
e	.100 BSC		2.54 BSC	
L	.125	.200	3.18	5.08
L_1	.150		3.81	
Q	.015	.060	.38	1.52
Q_1	.020		.51	
S		.098		2.49
S_1	.005		.13	
α	0°	15°	0°	15°

ML222

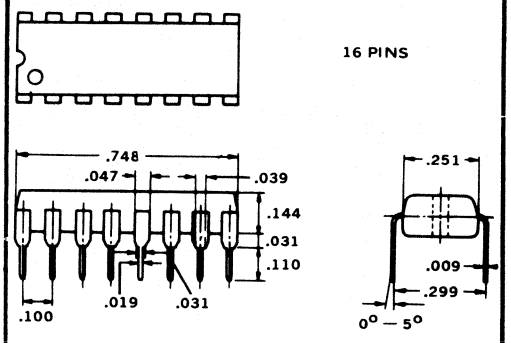

ML223

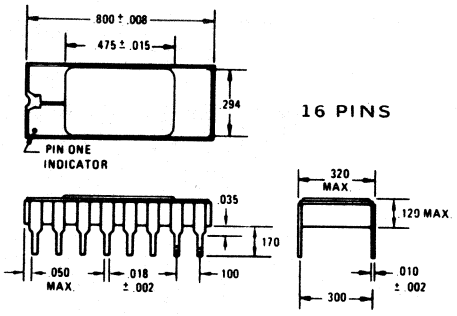

ML224

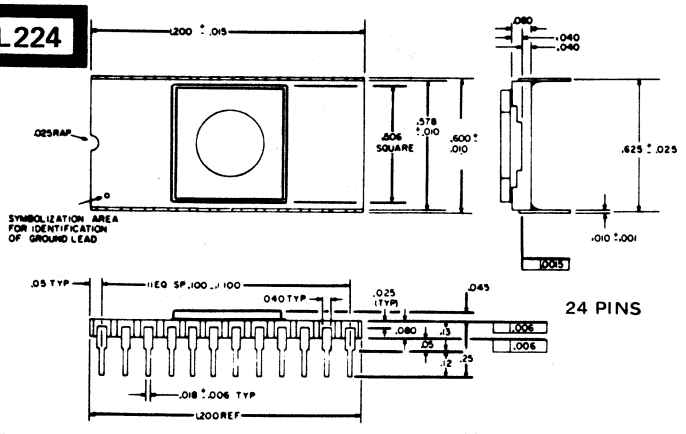

ML225

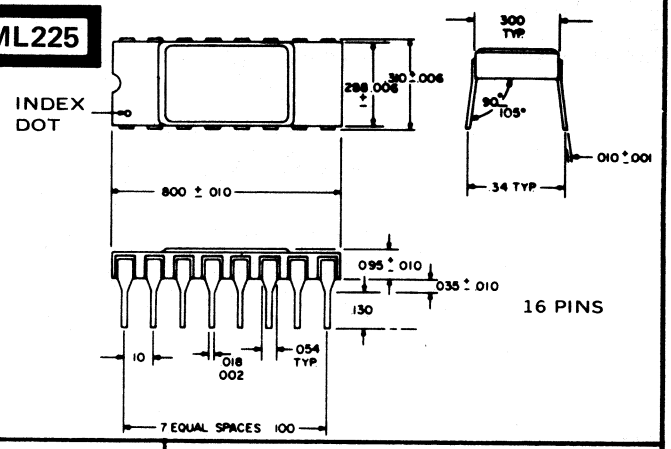

ML226

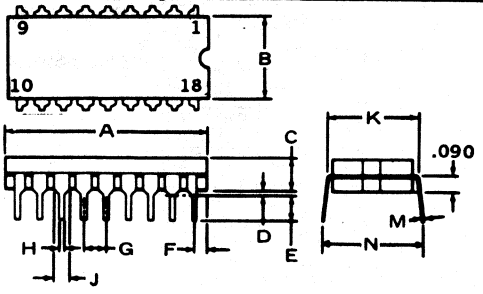

	A	B	C	D	E	F	G	H	J	K	M	N
ML226	.882 .925	.310 MAX	.145 .175	.015 .040	.120 .165	.015 .050	.090 .110	.015 .023	.030 .070	.290 .320	.008 .014	
ML226a	.880 .910	.285 .295	.145 .175	.015 .030	.125 .145		.090 .110	.015 .023	.055 .065	.290 .320	.008 .012	.325 .385
ML226b	.915 MAX	.290 MAX	.130 .180	.020 .070	.125 MIN	.050 MAX	.090 .110	.015 .021		.290 .320	.008 .012	.360 .410
ML226c	.910 MAX	.260		.020 MIN	.100 MIN		.100	.017	.047	.300	.010	

ML227

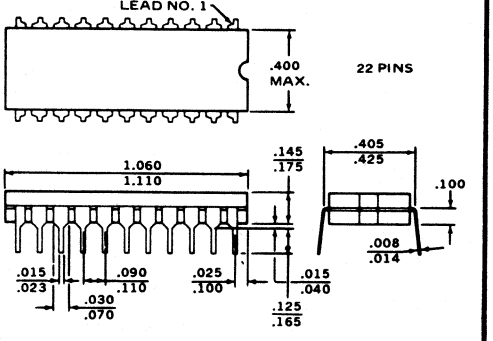

23. OUTLINE DRAWINGS

IN DRAWING NUMBER SEQUENCE

ML229

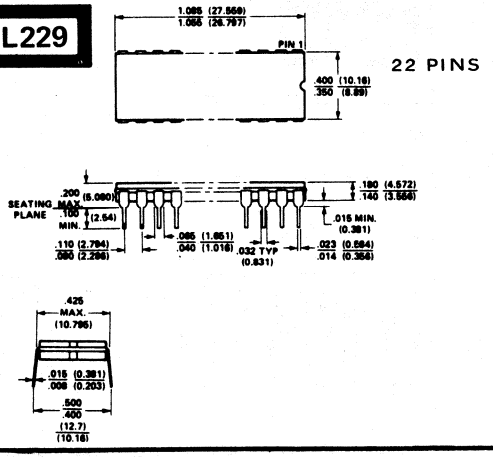

ML233

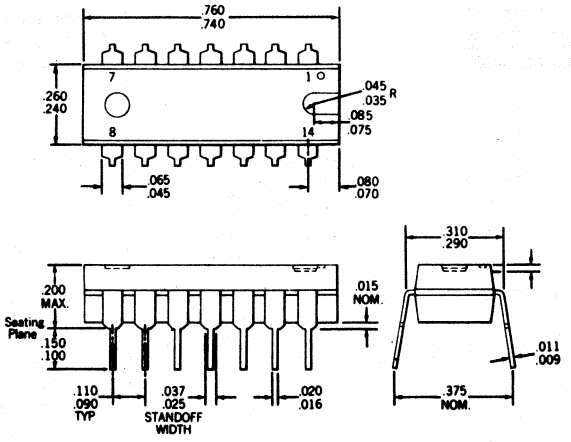

ML231

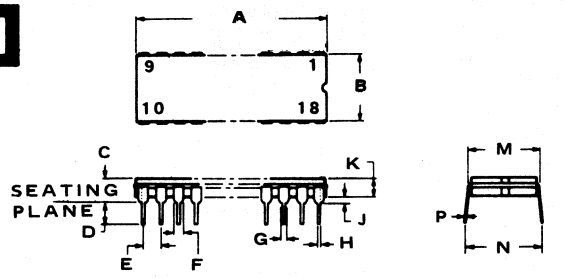

	A	B	C	D	E	F	G	H	J	K	M	N	P
ML231	.870 .910	.250 .300	.200 MAX	.100 MIN	.090 .110	.040 .065	.032 TYP	.014 .023	.015 MIN	.140 .170	.325 MAX	.300 .400	.008 .015
ML231a	.875 .905	.260 .300	.200 MAX	.100 .165	.090 .110	.040 .065	.032 TYP	.014 .023	.015 MIN	.145 .160	.322 MAX	.330 .400	.008 .015

ML232

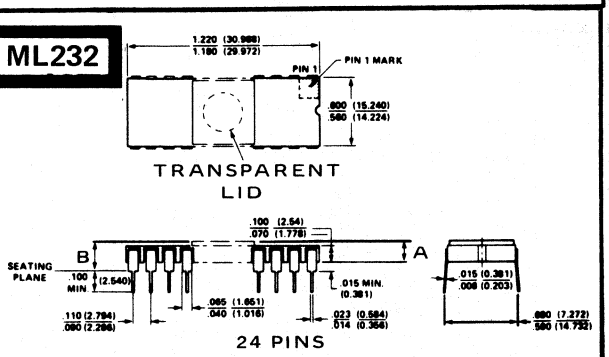

	A	B	TRANSPARENT LID
ML232	.080(2.032) .125(3.175)	.175(4.445) MAX	YES
ML232a	.100(2.54) .140(3.556)	.195(4.953) MAX	NO

ML234

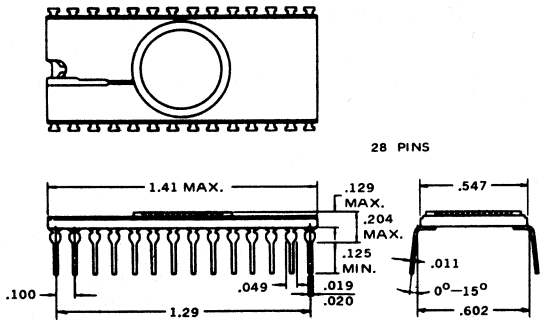

ML235

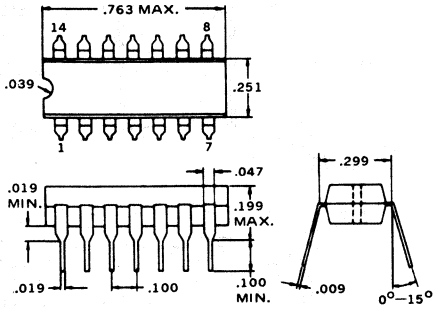

ML236

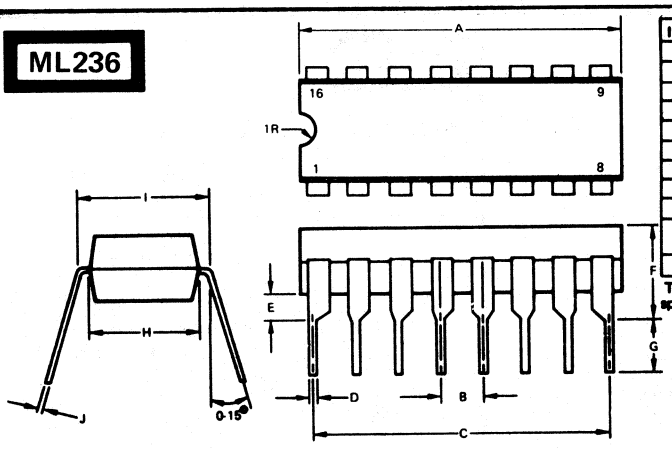

ITEM	MILLIMETERS	INCHES
A	19.4 MAX	0.76 MAX
B	2.54	0.10
C	17.78	0.70
D	0.5	0.02
E	0.5 MIN	0.02 MIN
F	4.55 MAX	0.18 MAX
G	2.54 MIN	0.10 MIN
H	6.4	0.25
I	7.62	0.30
J	$0.25^{+0.10}_{-0.05}$	0.01
R	1	0.039

Typical dimensions unless otherwise specified.

ML237

ITEM	MILLIMETER	INCHES
A	28.0 Max.	1.10 Max.
B	2.54	0.10
C	25.4	1.00
D	0.50	0.02
E	0.5 Min.	0.02 Min.
F	5.2 Max.	0.20 Max.
G	2.54 Min.	0.10 Min.
H	8.5	0.33
I	10.16	0.40
J	0.25 +0.10 -0.05	0.01 +0.004 -0.002
K	1.15	0.045
L	1.40	0.055
R	1.2	0.047

Typical Dimensions Unless Otherwise Specified.

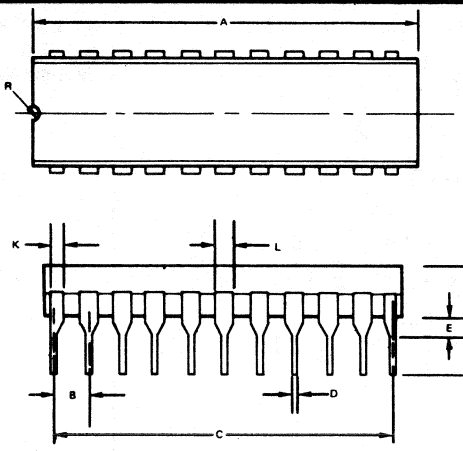

ML238

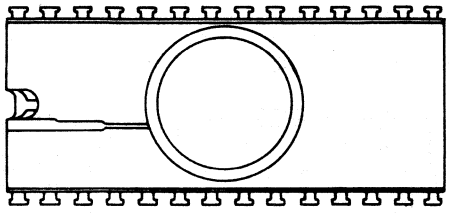

Item	Millimeters	Inches
A	36.0 Max.	1.41 Max.
B	2.54	0.1
C	33.0	1.29
D	1.27	0.05
E	0.50 ± 0.1	0.02 ± 0.004
F	3.2 Min.	0.13 Min.
G	5.2 Max.	0.20 Max.
H	3.3 Max.	0.13 Max.
I	0.30 ± 0.1	0.012 ± 0.004
J	13.9	0.55
K	15.3	0.60

Typical dimensions unless otherwise specified.

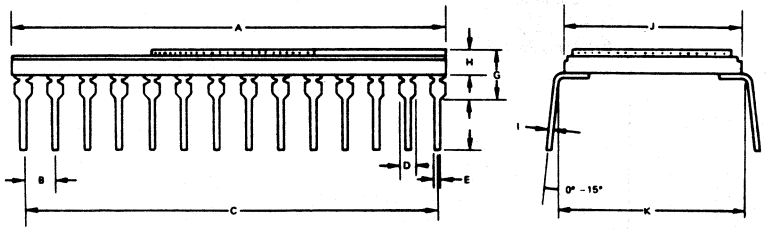

ML239

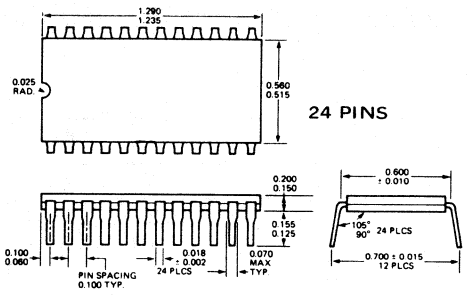

ML240

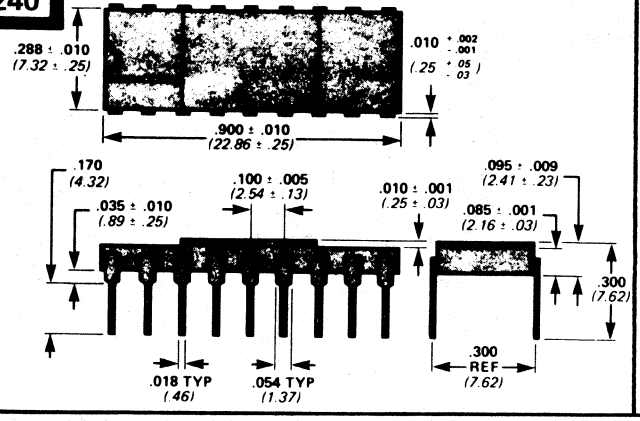

ML241

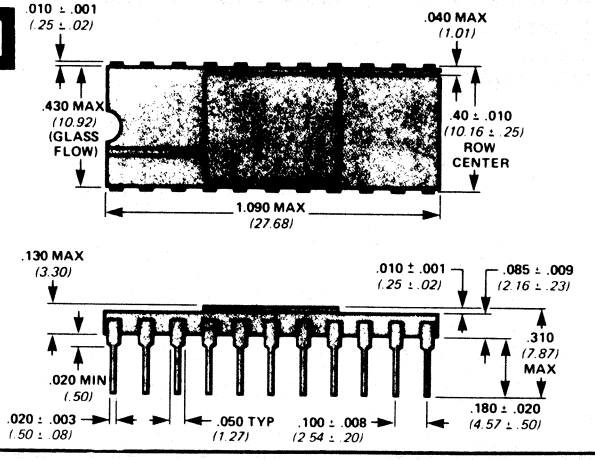

23. OUTLINE DRAWINGS

IN DRAWING NUMBER SEQUENCE

ML242

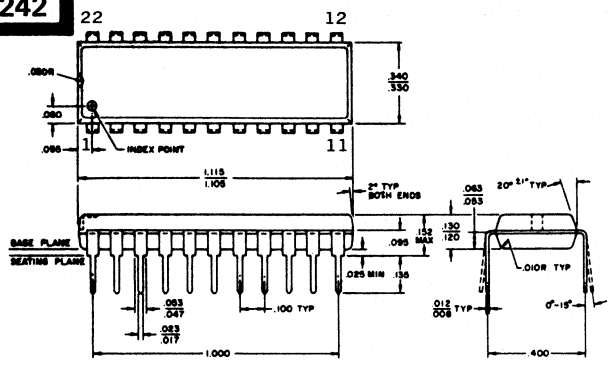

ML244

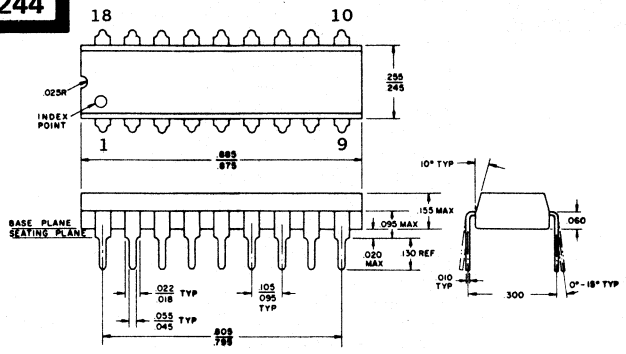

ML246

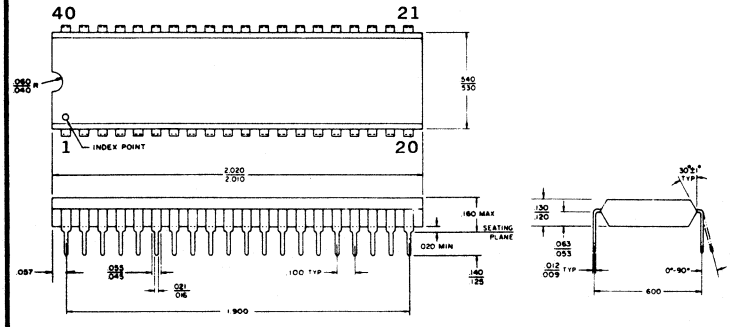

ML248

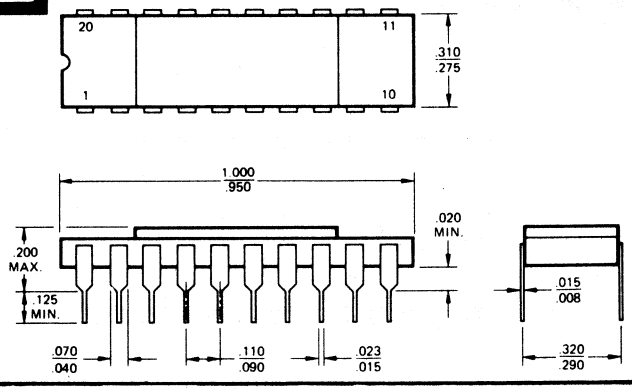

ML250

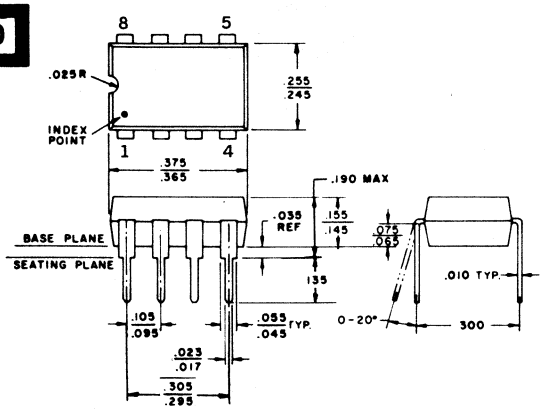

ML252

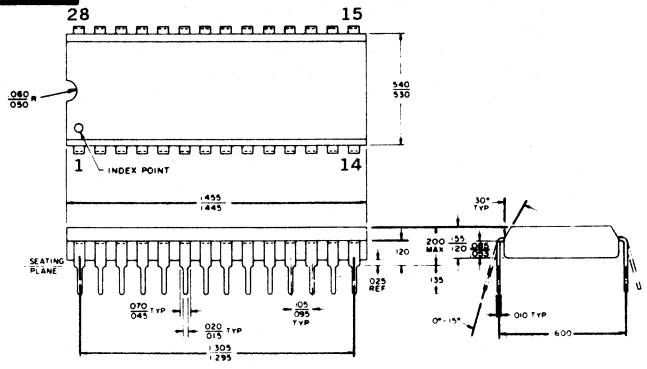

ML253

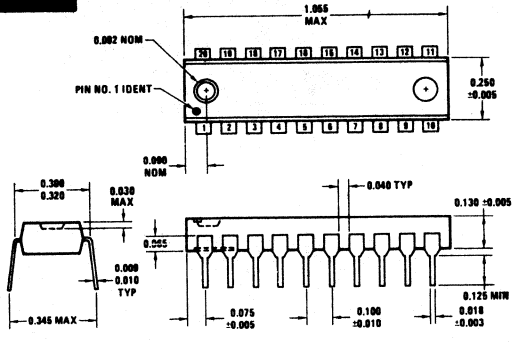

ML254

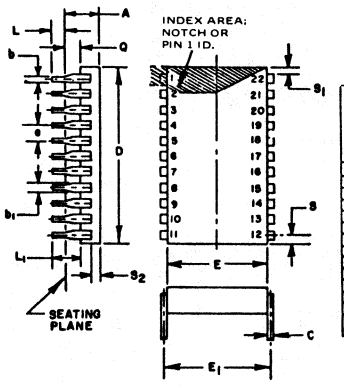

SYMBOL	DIMENSIONS			
	Inches		Millimeters	
	Min	Max	Min	Max
A		.225		5.72
b	.014	.023	.36	.58
b1	.030	.070	.76	1.78
c	.008	.015	.20	.38
D		1.100		27.94
E	.350	.390	8.89	9.91
E1	.320	.420	9.91	10.67
e	.100 BSC		2.54 BSC	
L	.120	.200	3.05	5.08
L1	.150		3.81	
Q	.015	.075	.38	1.91
S		.098		2.49
S1	.005		.13	
S2	.005		.13	

23. OUTLINE DRAWINGS

IN DRAWING NUMBER SEQUENCE

ML255

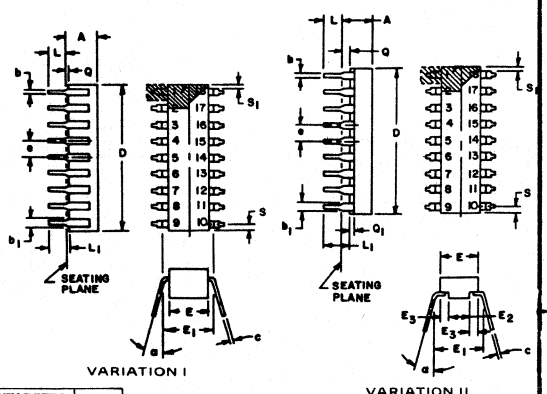

SYMBOL	INCHES		MILLIMETERS		NOTES
	MIN	MAX	MIN	MAX	
A		.200		5.08	
b	.014	.023	.36	.58	8
b_1	.030	.070	.76	1.78	2,8
c	.008	.015	.20	.38	8
D		.960		24.38	4
E	.220	.310	5.59	7.87	4
E_1	.290	.320	7.37	8.13	7
E_2	.100		2.54		
E_3	.050		1.27		
e	.100 BSC		2.54 BSC		5,9
L	.125	.200	3.18	5.08	
L_1	.150		3.81		
Q	.015	.060	.38	1.52	3
Q_1	.020		.51		
S		.098		2.49	6
S_1	.005		.13		6
S_2	.005		.13		
α	0°	15°	0°	15°	

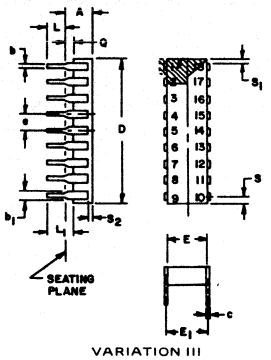

ML256

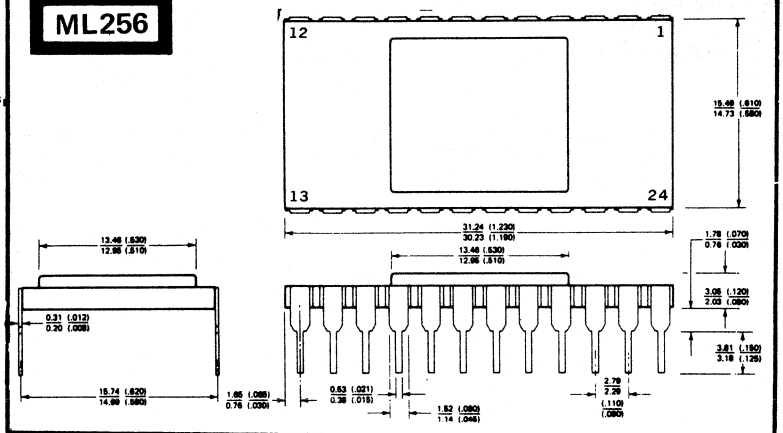

ML258

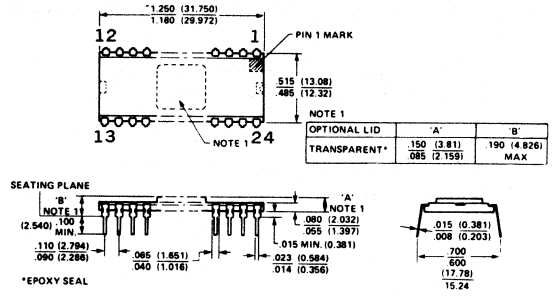

OPTIONAL LID	'A'	'B'
TRANSPARENT*	.150 (3.81) .085 (2.159)	.190 (4.826) MAX

ML259

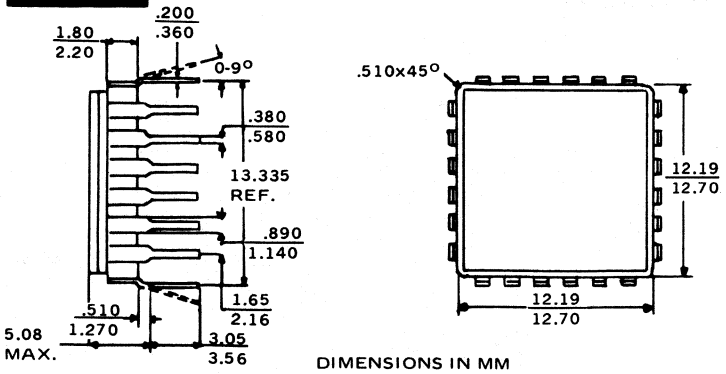

ML261

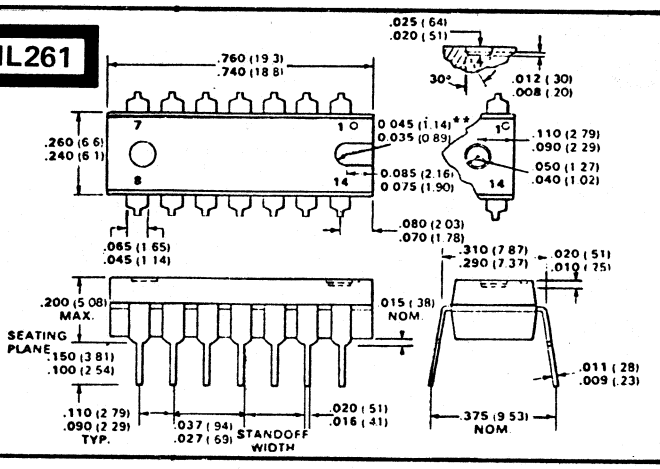

ML262

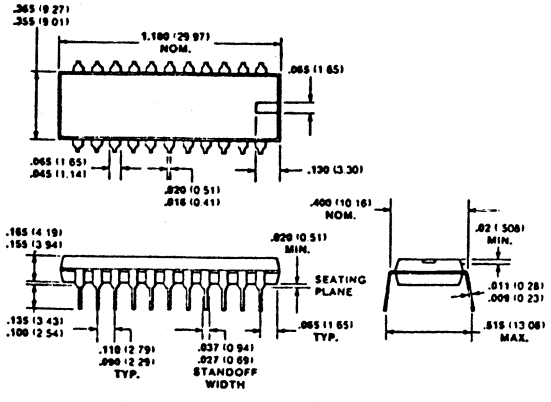

23. OUTLINE DRAWINGS

IN DRAWING NUMBER SEQUENCE

ML264

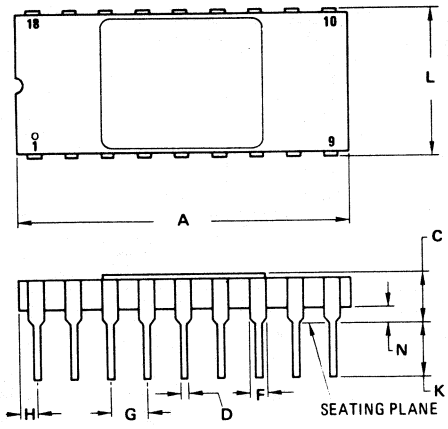

NOTES:
1. LEADS WITHIN 0.13 mm (0.005) RADIUS OF TRUE POSITION AT SEATING PLANE AT MAXIMUM MATERIAL CONDITION.
2. NOMINAL DIM FROM CENTER OF LEADS PARALLEL TO DIM "L" IS 7.62 mm (0.300").

DIM	MILLIMETERS MIN	MILLIMETERS MAX	INCHES MIN	INCHES MAX
A	22.48	23.24	0.885	0.915
C	3.18	4.27	0.125	0.168
D	0.38	0.58	0.015	0.023
F	0.89	1.40	0.035	0.055
G	2.54 BSC		0.100 BSC	
H	1.14	1.40	0.045	0.055
J	0.20	0.30	0.008	0.012
K	2.68	4.44	0.105	0.175
L	7.37	8.23	0.290	0.324
M	–	10^0	–	10^0
N	0.64	1.52	0.025	0.060

ML265

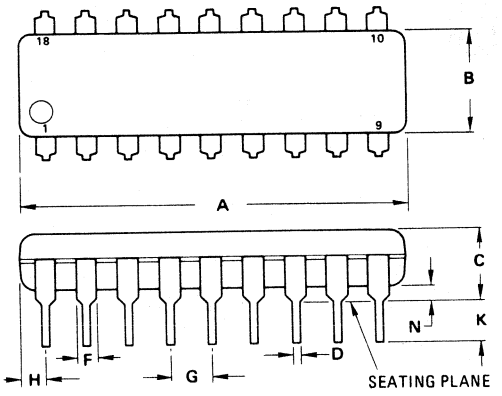

DIM	MILLIMETERS MIN	MILLIMETERS MAX	INCHES MIN	INCHES MAX
A	22.22	23.24	0.875	0.915
B	6.60	7.11	0.260	0.280
C	4.06	4.57	0.160	0.180
D	0.36	0.51	0.014	0.020
F	1.02	1.52	0.040	0.060
G	2.41	2.67	0.095	0.105
H	1.14	1.40	0.045	0.055
J	0.20	0.30	0.008	0.012
K	3.05	3.56	0.120	0.140
L	7.37	7.87	0.290	0.310
M	0^0	10^0	0^0	10^0
N	0.51	1.02	0.020	0.040

ML271

NOTES:
1. LEADS WITHIN 0.13 mm (0.005) RADIUM OF TRUE POSITION AT SEATING PLANE AT MAXIMUM MATERIAL CONDITION (DIM "G").
2. DIMENSION "L" TO CENTER OF LEADS WHEN FORMED PARALLEL.

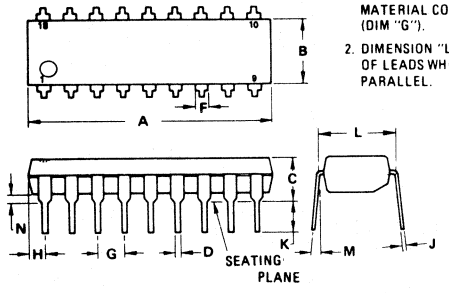

DIM	MILLIMETERS MIN	MILLIMETERS MAX	INCHES MIN	INCHES MAX
A	23.11	23.88	0.910	0.940
B	6.10	6.60	0.240	0.260
C	4.06	4.57	0.160	0.180
D	0.38	0.51	0.015	0.020
F	1.02	1.52	0.040	0.060
G	2.54 BSC		0.100 BSC	
H	1.32	1.83	0.052	0.072
J	0.20	0.30	0.008	0.012
K	2.92	3.43	0.115	0.135
L	7.37	7.87	0.290	0.310
M	0^0	10^0	0^0	10^0
N	0.51	1.02	0.020	0.040

ML274

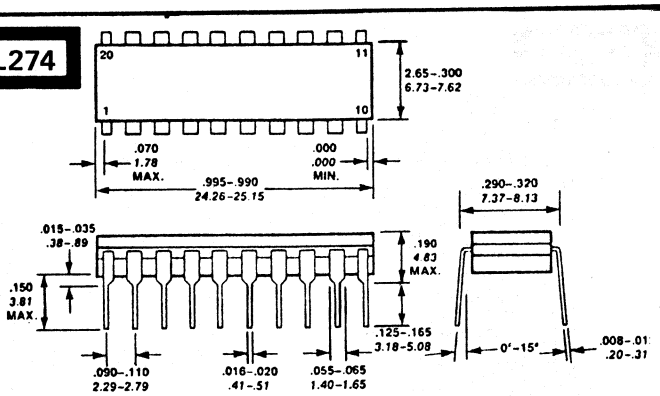

UNLESS OTHERWISE SPECIFIED:
ALL DIMENSIONS MIN.-MAX. IN INCHES.
ALL DIMENSIONS MIN.-MAX. IN MILLIMETERS.

ML275

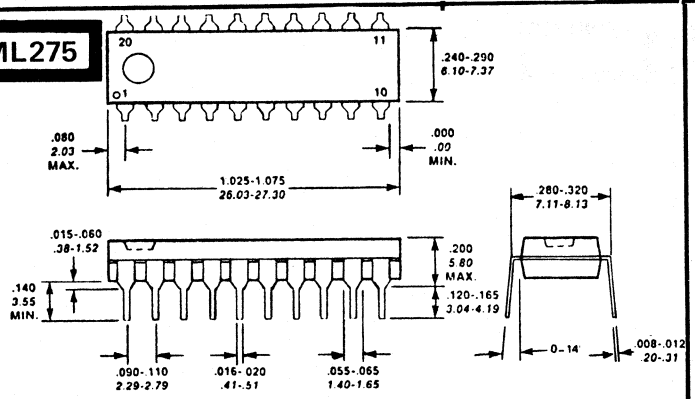

UNLESS OTHERWISE SPECIFIED:
ALL DIMENSIONS MIN.-MAX. IN INCHES.
ALL DIMENSIONS MIN.-MAX. IN MILLIMETERS.

23. OUTLINE DRAWINGS

IN DRAWING NUMBER SEQUENCE

ML276

UNLESS OTHERWISE SPECIFIED:
ALL DIMENSIONS MIN.-MAX. IN INCHES.
ALL DIMENSIONS MIN.-MAX. IN MILLIMETERS

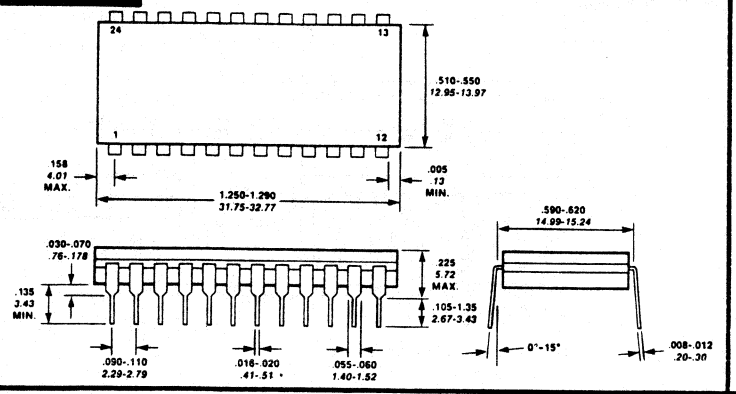

ML277

UNLESS OTHERWISE SPECIFIED:
ALL DIMENSIONS MIN.-MAX. IN INCHES.
ALL DIMENSIONS MIN.-MAX. IN MILLIMETERS.

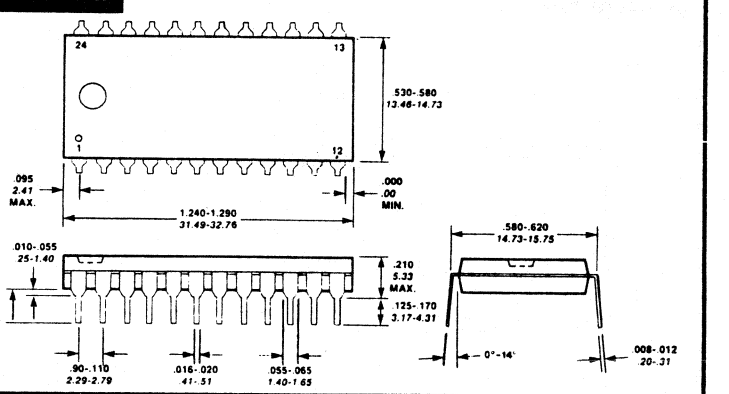

ML278

UNLESS OTHERWISE SPECIFIED:
ALL DIMENSIONS MIN.-MAX. IN INCHES.
ALL DIMENSIONS MIN.-MAX. IN MILLIMETERS.

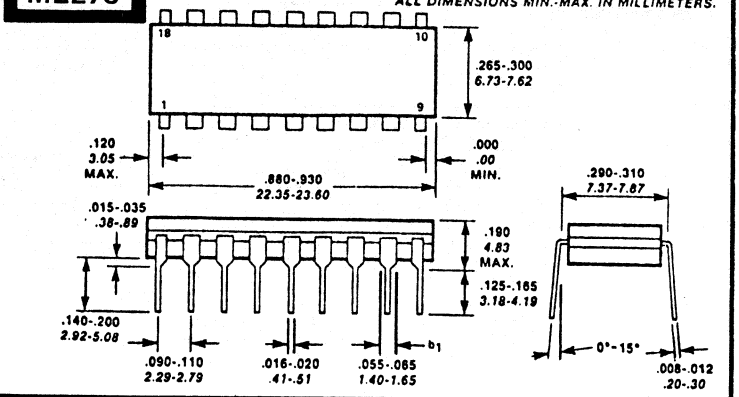

ML279

UNLESS OTHERWISE SPECIFIED:
ALL DIMENSIONS MIN.-MAX. IN INCHES.
ALL DIMENSIONS MIN.-MAX IN MILLIMETERS.

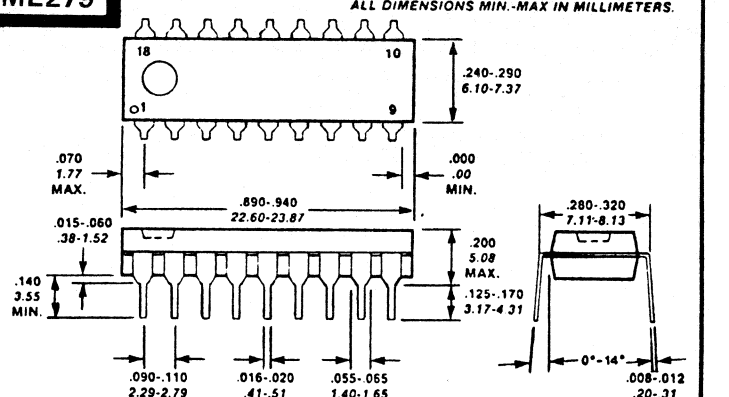

ML280

UNLESS OTHERWISE SPECIFIED:
ALL DIMENSIONS MIN.-MAX. IN INCHES.
ALL DIMENSIONS MIN.-MAX. IN MILLIMETERS.

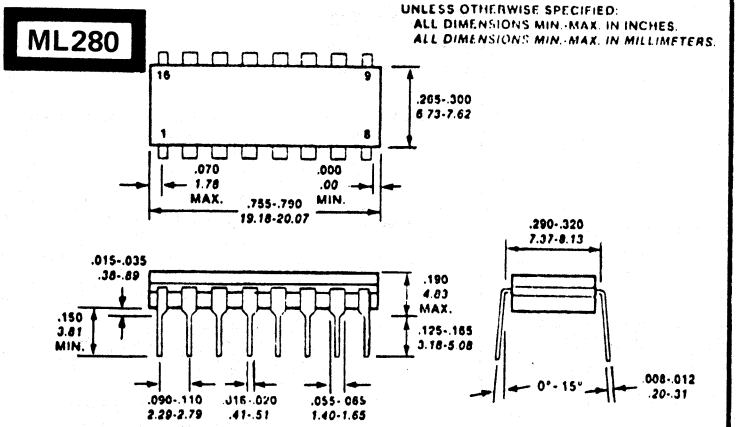

ML281

UNLESS OTHERWISE SPECIFIED:
ALL DIMENSIONS MIN.-MAX. IN INCHES.
ALL DIMENSIONS MIN.-MAX. IN MILLIMETERS.

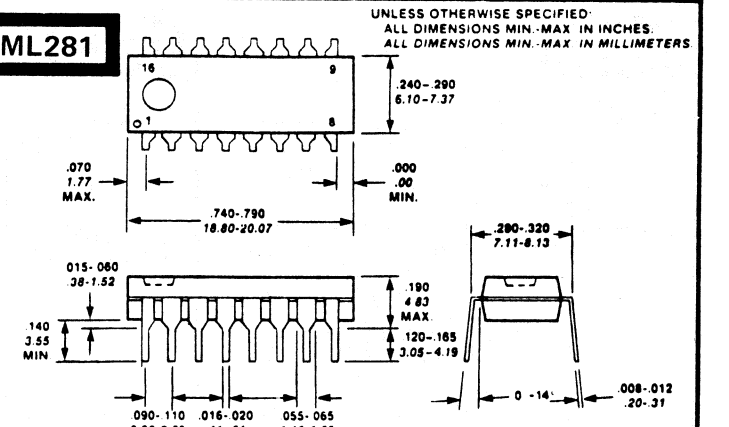

ML282

UNLESS OTHERWISE SPECIFIED:
ALL DIMENSIONS MIN.-MAX. IN INCHES.
ALL DIMENSIONS MIN.-MAX. IN MILLIMETERS.

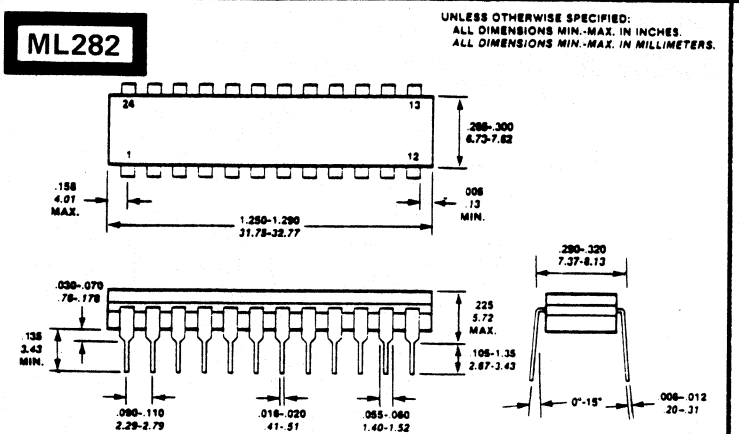

ML283

UNLESS OTHERWISE SPECIFIED:
ALL DIMENSIONS MIN.-MAX. IN INCHES.
ALL DIMENSIONS MIN.-MAX. IN MILLIMETERS

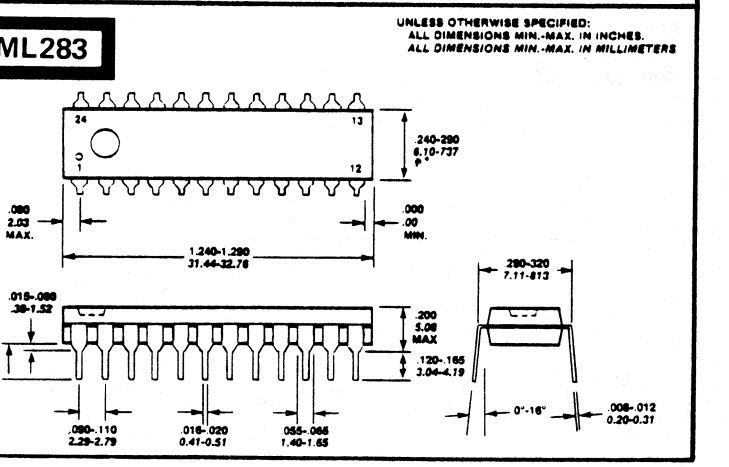

23. OUTLINE DRAWINGS

IN DRAWING NUMBER SEQUENCE

ML284

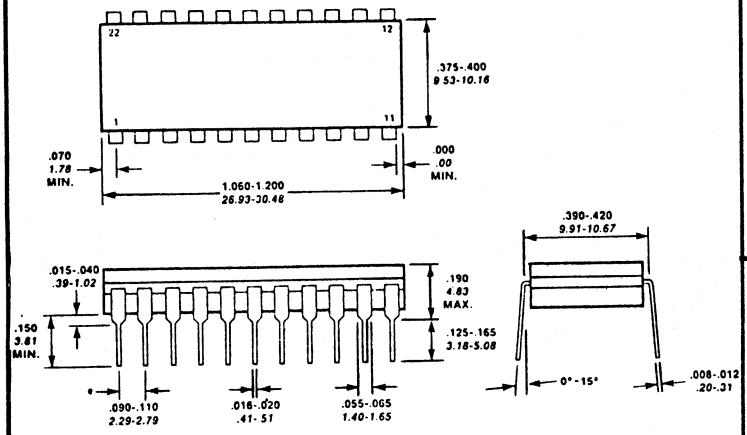

UNLESS OTHERWISE SPECIFIED:
ALL DIMENSIONS MIN.-MAX. IN INCHES.
ALL DIMENSIONS MIN.-MAX IN MILLIMETERS.

ML285

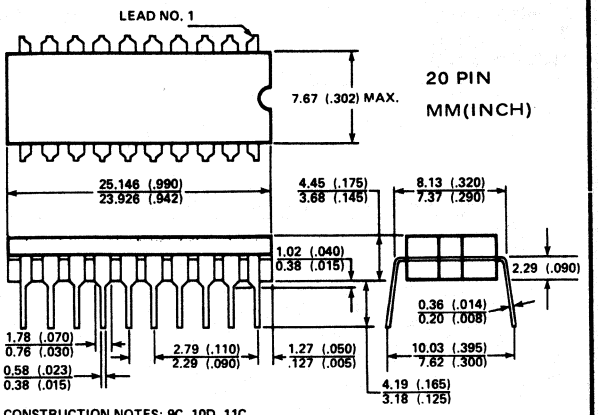

CONSTRUCTION NOTES: 9C, 10D, 11C

ML286

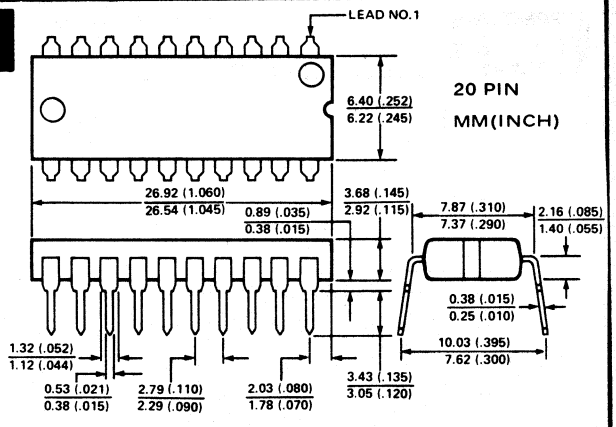

ML287

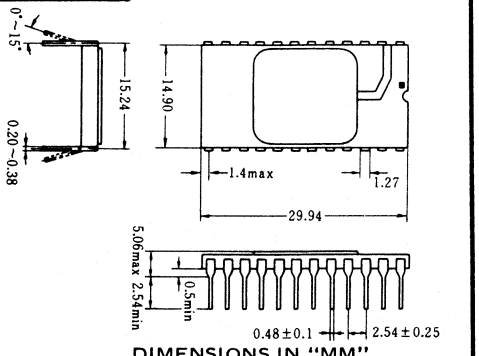

DIMENSIONS IN "MM"

ML288

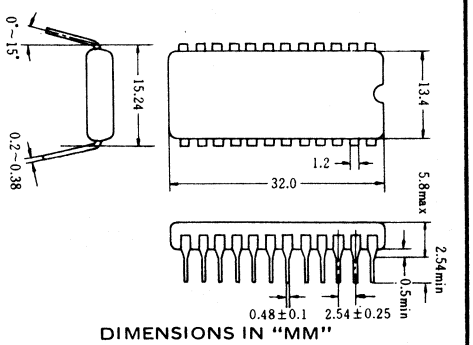

DIMENSIONS IN "MM"

ML289

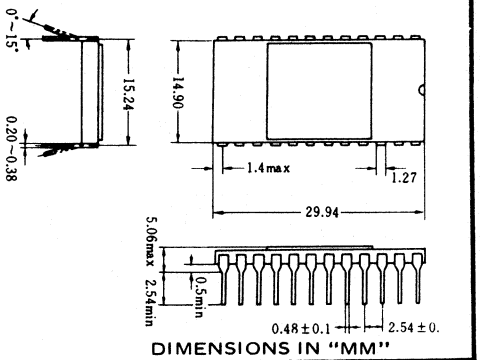

DIMENSIONS IN "MM"

ML290

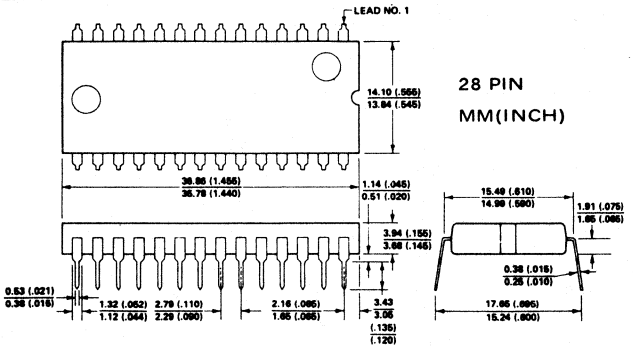

ML291

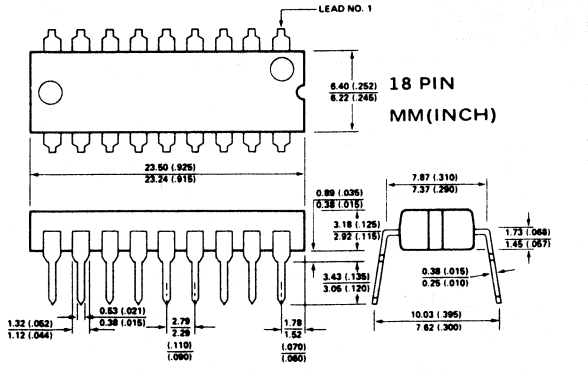

23. OUTLINE DRAWINGS

IN DRAWING NUMBER SEQUENCE

ML292

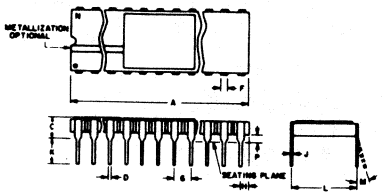

SYMBOL	INCHES		MILLIMETERS	
	MIN.	MAX.	MIN.	MAX.
A	0.890	0.915	22.606	23.241
C	–	0.200	–	5.080
D	0.015	0.021	0.381	0.533
F	0.054 REF.		1.371 REF.	
G	0.100 BSC		2.54 BSC	
H	0.035	0.065	0.889	1.651
J	0.008	0.012	0.203	0.304
K	0.125	0.150	3.175	3.810
L	0.290	0.310	7.366	7.874
M	0°	15°	0°	15°
P	0.025	0.045	0.635	1.143
N	18		18	

ML293

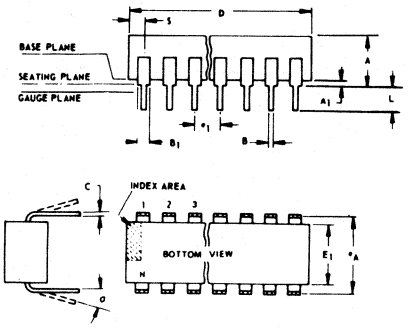

SYMBOL	INCHES		MILLIMETERS	
	MIN.	MAX.	MIN.	MAX.
A	0.155	0.200	3.94	5.08
A_1	0.020	0.050	0.508	1.27
B	0.014	0.020	0.356	0.508
B_1	0.035	0.065	0.89	1.65
C	0.008	0.012	0.204	0.304
D	0.845	0.885	21.47	22.47
E_1	0.240	0.260	6.10	6.60
e_1	0.100 TP		2.54 TP	
e_A	0.300 TP		7.62 TP	
L	0.125	0.150	3.18	3.81
α	0°	15°	0°	15°
N	18		18	
N_1	0		0	
S	0.015	0.060	0.39	1.52

ML294

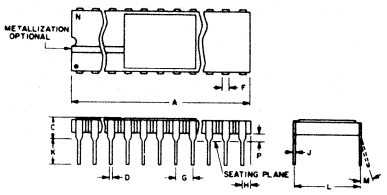

SYMBOL	INCHES		MILLIMETERS	
	MIN.	MAX.	MIN.	MAX.
A	1.065	1.100	27.05	27.94
C	0.085	0.145	2.16	3.68
D	0.017	0.023	0.43	0.56
F	0.040 REF.		1.02 REF.	
G	0.100 BSC		2.54 BSC	
H	0.030	0.070	0.76	1.78
J	0.008	0.012	0.20	0.30
K	0.125	0.175	3.18	4.45
L	0.380	0.420	9.65	10.67
M	–	7°	–	7°
P	0.025	0.050	0.64	1.27
N	22		22	

ML295

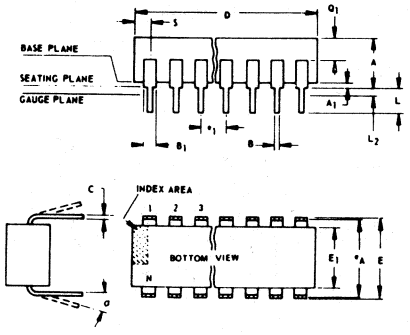

SYMBOL	INCHES		MILLIMETERS	
	MIN.	MAX.	MIN.	MAX.
A	0.155	0.200	3.94	5.08
A_1	0.020	0.050	0.508	1.27
B	0.015	0.020	0.381	0.508
B_1	0.035	0.065	0.89	1.65
C	0.008	0.012	0.204	0.304
D		1.120		28.44
E	0.390	0.420	9.91	10.66
E_1	0.345	0.355	8.77	9.01
e_1	0.100 TP		2.54 TP	
e_A	0.400 TP		10.16 TP	
L	0.125	0.150	3.18	3.81
L_2	0	0.030	0	0.762
α	2°	15°	2°	15°
N	22		22	
N_1	0		0	
Q_1	0.055	0.085	1.40	2.15
S	0.015	0.060	0.381	1.52

ML298

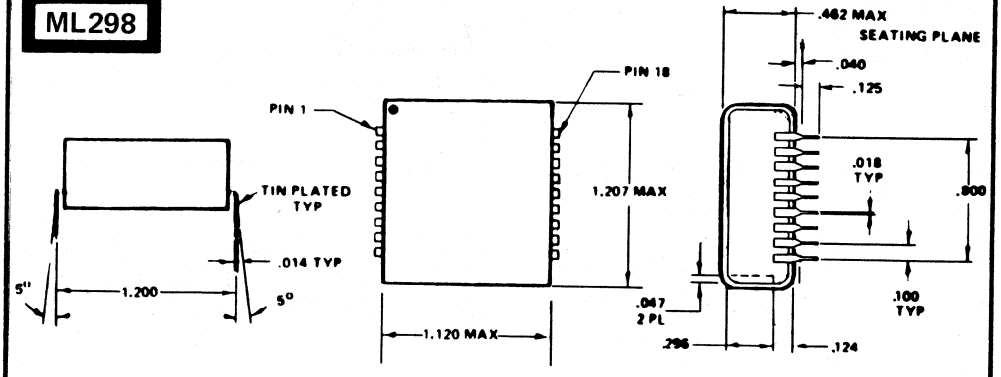

23. OUTLINE DRAWINGS

IN DRAWING NUMBER SEQUENCE

ML299

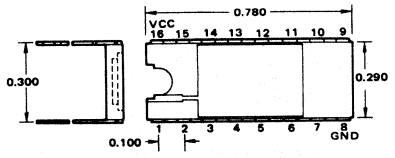

ML300

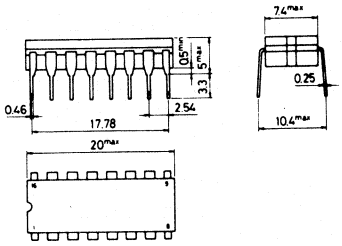

DIMENSIONS IN "MM"

ML301

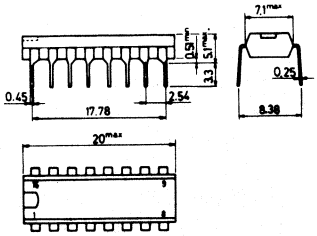

DIMENSIONS IN "MM"

ML302

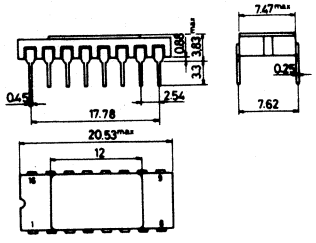

DIMENSIONS IN "MM"

ML303

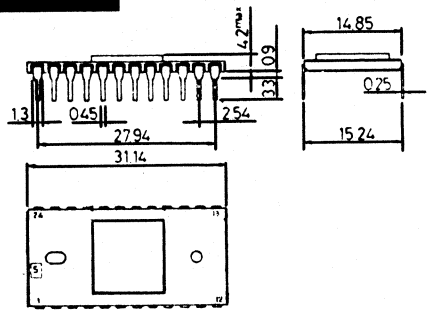

DIMENSIONS IN "MM"

ML304

INCH
(MM)

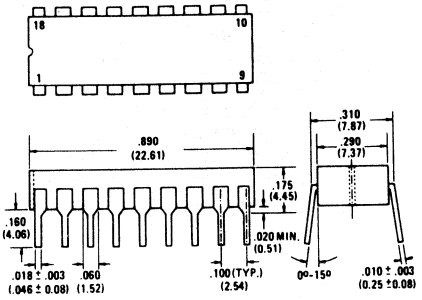

ML305

INCH
(MM)

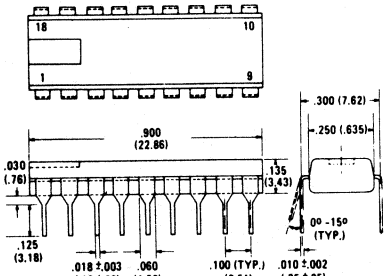

ML306

INCH
(MM)

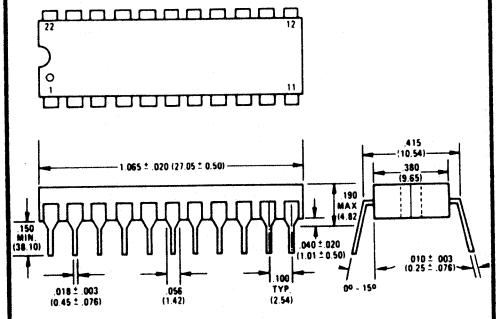

ML307

INCH
(MM)

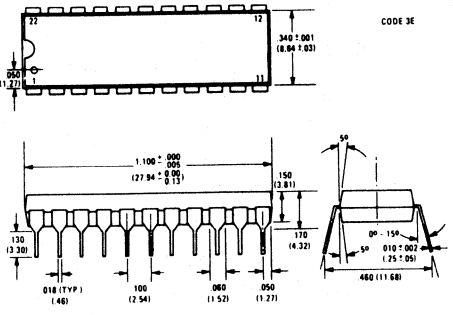

ML308

INCH
(MM)

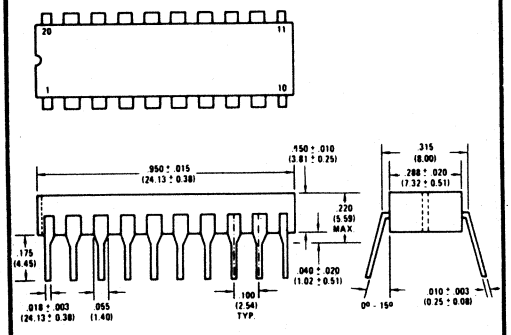

ML309

INCH
(MM)

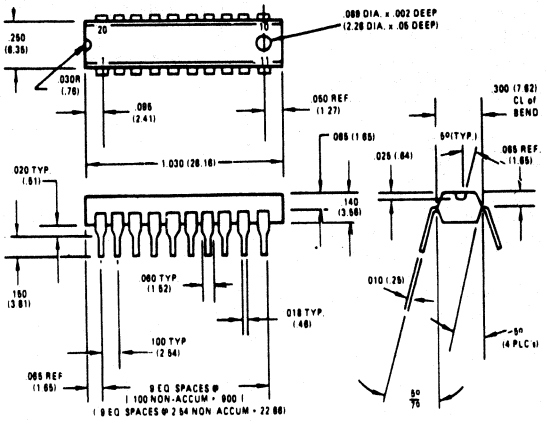

23. OUTLINE DRAWINGS

IN DRAWING NUMBER SEQUENCE

ML310

INCH (MM)

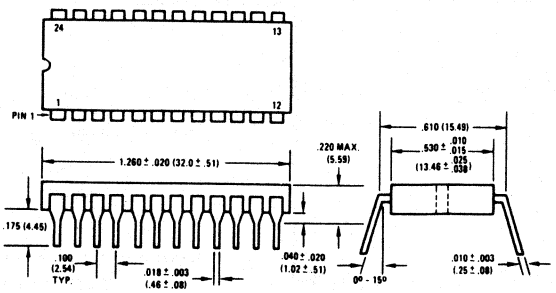

ML311

INCH (MM)

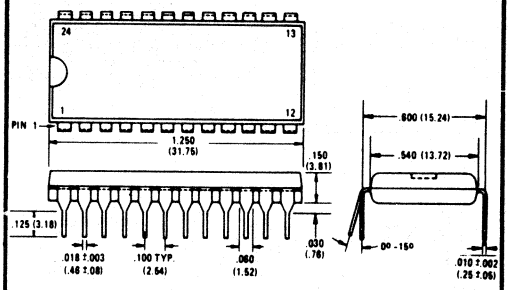

ML312

INCH (MM)

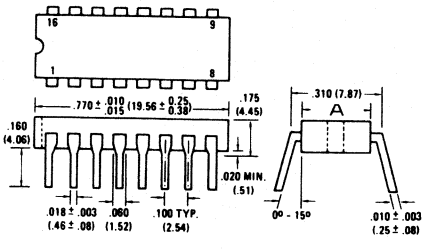

	A
ML312	.270(6.86)
ML312a	.290(7.37)

ML313

INCH (MM)

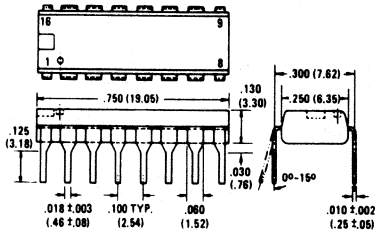

ML314

INCH (MM)

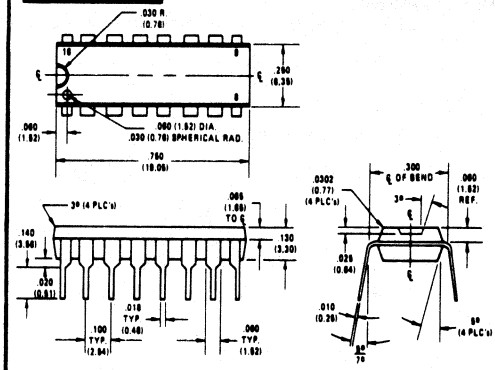

ML315

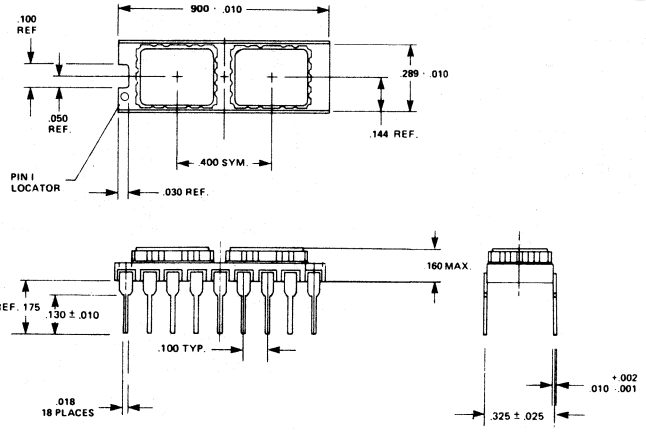

ML316

DIM	MILLIMETERS MIN	MILLIMETERS MAX	INCHES MIN	INCHES MAX
A	36.83	37.59	1.450	1.480
B	12.70	13.46	0.500	0.530
C	5.08	5.84	0.200	0.230
D	0.38	0.56	0.015	0.022
F	1.27	1.65	0.050	0.065
G	2.54	BSC	0.100	BSC
H	2.03	2.29	0.080	0.090
J	0.20	0.30	0.008	0.012
K	3.18	4.06	0.125	0.160
L	15.24	BSC	0.600	BSC
M	5°	15°	5°	15°
N	0.51	1.27	0.020	0.050

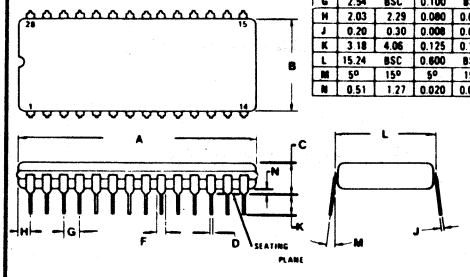

ML317

DIM	MILLIMETERS MIN	MILLIMETERS MAX	INCHES MIN	INCHES MAX
A		22.10	–	0.870
B	6.10	6.60	0.240	0.260
C	–	5.08	–	0.200
D	0.38	0.53	0.015	0.021
F	–	1.78	–	0.070
G	2.54 BSC		0.100 BSC	
H	0.38	2.41	0.015	0.095
J	0.20	0.38	0.008	0.015
K	2.92	–	0.115	–
L	7.62 BSC		0.300 BSC	
M	0°	15°	0°	15°
N	0.51	–	0.020	–
R	–	8.26	–	0.325

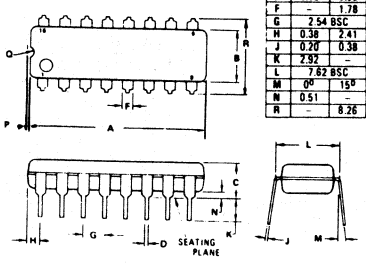

ML318

DIM	MILLIMETERS MIN	MILLIMETERS MAX	INCHES MIN	INCHES MAX
A	20.07	20.57	0.790	0.810
C	2.67	3.94	0.105	0.155
D	0.38	0.53	0.015	0.021
F	1.22	1.52	0.048	0.060
G	2.54 BSC		0.100 BSC	
H	0.76	1.78	0.030	0.070
J	0.20	0.31	0.008	0.012
K	3.05	4.83	0.120	0.190
L	7.62 BSC		0.300 BSC	
M	–	10°	–	10°
N	0.64	1.52	0.025	0.060

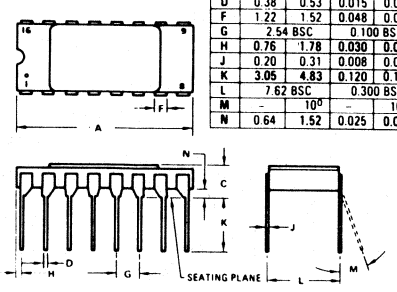

ML319

DIM	MILLIMETERS MIN	MILLIMETERS MAX	INCHES MIN	INCHES MAX
A	31.24	32.26	1.230	1.270
B	12.70	13.72	0.500	0.540
C	4.06	5.59	0.160	0.220
D	0.41	0.51	0.016	0.020
F	1.27	1.52	0.050	0.060
G	2.54 BSC		0.100 BSC	
J	0.20	0.30	0.008	0.012
K	2.29	4.06	0.090	0.160
L	15.24 BSC		0.600 BSC	
M	0°	15°	0°	15°
N	0.51	1.27	0.020	0.050

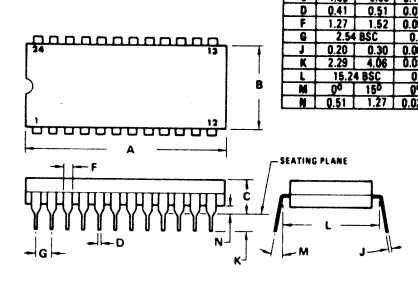

23. OUTLINE DRAWINGS

IN DRAWING NUMBER SEQUENCE

ML320

DIM	MILLIMETERS MIN	MILLIMETERS MAX	INCHES MIN	INCHES MAX
A	29.97	30.99	1.180	1.220
B	14.86	16.82	0.585	0.815
C	3.05	4.19	0.120	0.165
D	0.38	0.53	0.015	0.021
F	0.76	1.40	0.030	0.055
G	2.54 BSC		0.100 BSC	
H	0.76	1.78	0.030	0.070
J	0.20	0.30	0.008	0.012
K	2.54	4.19	0.100	0.165
M	-	10°	-	10°
N	0.51	1.52	0.020	0.060

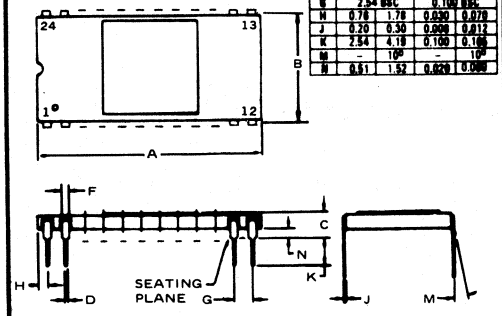

ML321

NOTES:
All dimensions in inches (bold) and millimeters (parentheses)

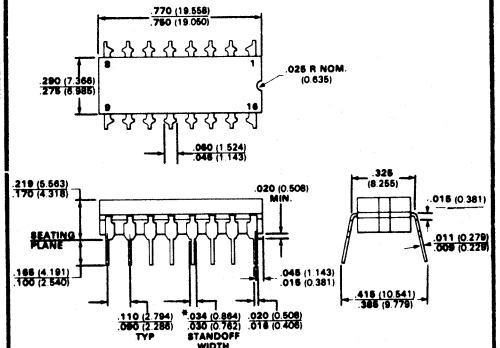

ML322

NOTES:
All dimensions in inches (bold) and millimeters (parentheses)

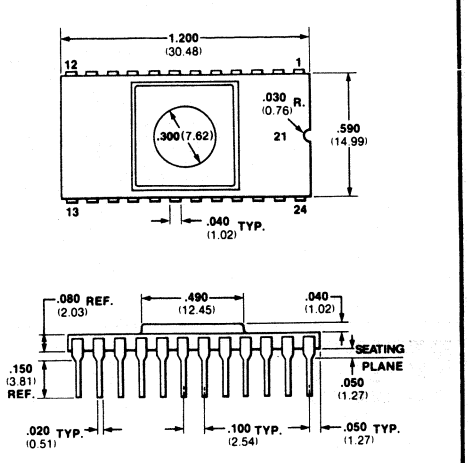

ML323

NOTES:
All dimensions in inches (bold) and millimeters (parentheses)

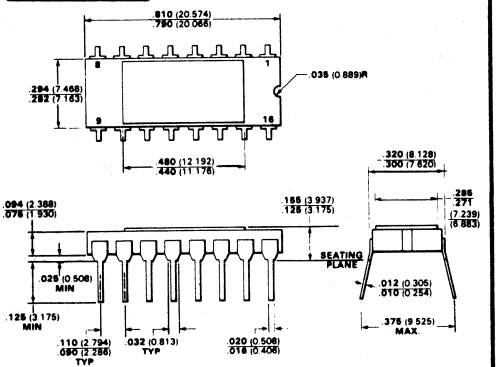

ML324

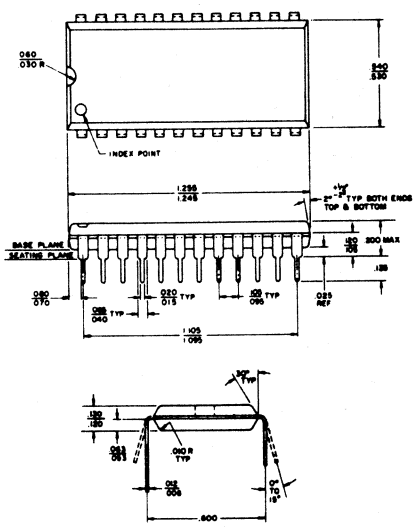

ML325

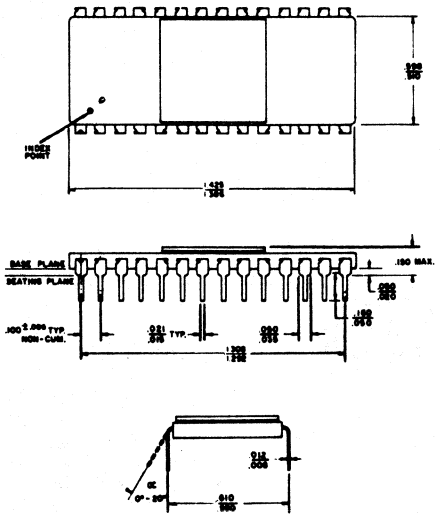

ML326

NOTES:
All dimensions in inches (bold) and millimeters (parentheses)

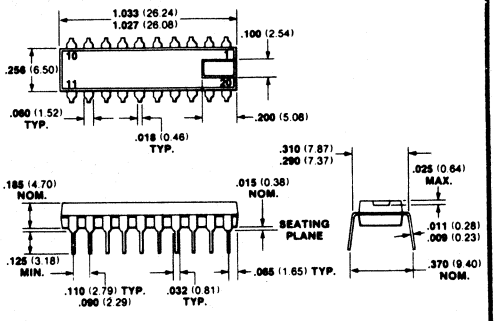

ML327

INCH
(MM)

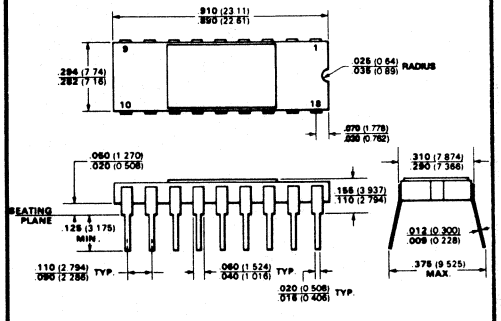

ML328

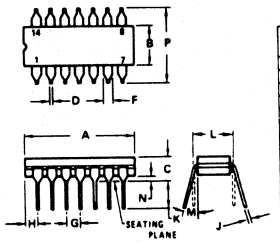

DIM	MILLIMETERS MIN	MILLIMETERS MAX	INCHES MIN	INCHES MAX
A	19.05	19.94	0.750	0.785
B	6.10	7.49	0.240	0.295
C	-	5.08	-	0.200
D	0.38	0.56	0.015	0.023
F	1.40	1.77	0.055	0.070
G	2.54 BSC		0.100 BSC	
H	1.91	2.29	0.075	0.090
J	0.20	0.38	0.008	0.015
K	3.18	5.08	0.125	0.200
L	7.49	8.89	0.295	0.350
M	-	15°	-	15°
N	0.51	1.02	0.020	0.040

23. OUTLINE DRAWINGS

IN DRAWING NUMBER SEQUENCE

ML329

DIM	MILLIMETERS MIN	MILLIMETERS MAX	INCHES MIN	INCHES MAX
A	18.03	19.56	0.710	0.770
B	6.10	6.60	0.240	0.260
C	–	5.08	–	0.200
D	0.38	0.53	0.015	0.021
F	1.02	1.78	0.040	0.070
G	2.54 BSC		0.100 BSC	
H	1.32	2.41	0.052	0.095
J	0.20	0.38	0.008	0.015
K	2.92	–	0.115	–
L	7.62 BSC		0.300 BSC	
M	0°	15°	0°	15°
N	0.51	–	0.020	–
R	–	8.26	–	0.325

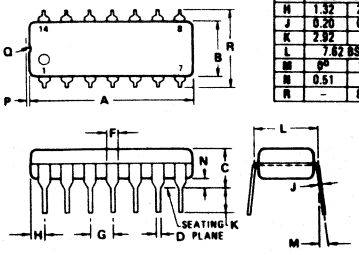

ML330

MFR.	PKG.	USE DWG.
TII	J	MO001AA
	N	MO001AA
MOTA	J	ML328
	N	ML329
AMV	J	ML342
	N	ML343

ML331

MFR.	PKG.	USE DWG.
TII	J	ML61a
	N	ML209
MOTA	J	ML157a
	N	ML317
AMV	J	ML62c
	N	ML89a

ML332

DIM	MILLIMETERS MIN	MILLIMETERS MAX	INCHES MIN	INCHES MAX
A	24.38	25.15	0.960	0.990
B	6.86	7.49	0.270	0.295
C	4.32	5.08	0.170	0.200
D	0.38	0.56	0.015	0.022
F	1.40	1.65	0.055	0.065
G	2.54 BSC		0.100 BSC	
H	0.89	1.40	0.035	0.055
J	0.20	0.30	0.008	0.012
K	3.18	4.06	0.125	0.160
L	7.62 BSC		0.300 BSC	
M	5°	15°	5°	15°
N	0.51	0.76	0.020	0.030

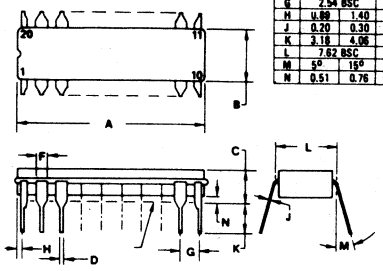

ML333

DIM	MILLIMETERS MIN	MILLIMETERS MAX	INCHES MIN	INCHES MAX
A	25.65	27.18	1.010	1.070
B	6.10	6.60	0.240	0.260
C	3.94	4.19	0.155	0.165
D	0.38	0.56	0.015	0.022
F	1.27	1.78	0.050	0.070
G	2.54 BSC		0.100 BSC	
J	0.20	0.38	0.008	0.015
K	2.79	3.56	0.110	0.140
L	7.62 BSC		0.300 BSC	
M	0°	15°	0°	15°
N	0.51	1.02	0.020	0.040

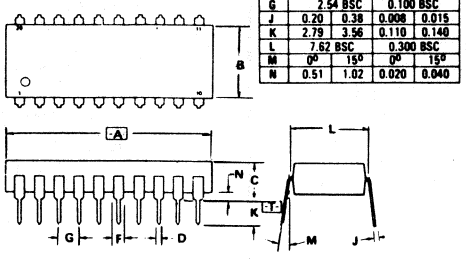

ML334

MFR.	PKG.	USE DWG.
TII	J	ML213
	N	ML161
MOTA	J	ML332
	N	ML333
MMI	J	ML274
	N	ML275
AMV	J	ML377
	N	ML161g

ML336

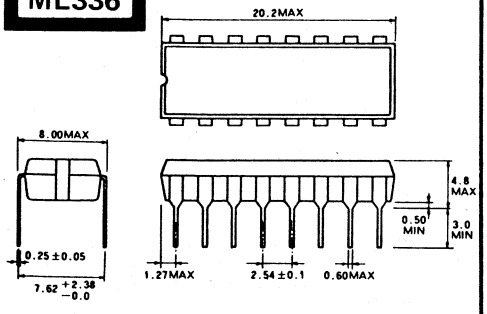

DIMENSIONS IN "MM"

ML337

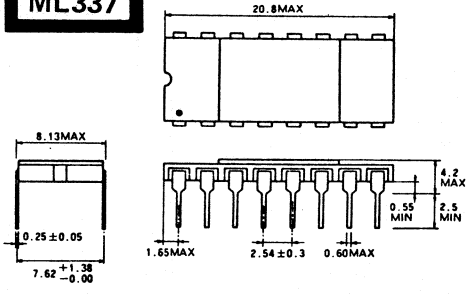

DIMENSIONS IN "MM"

ML338

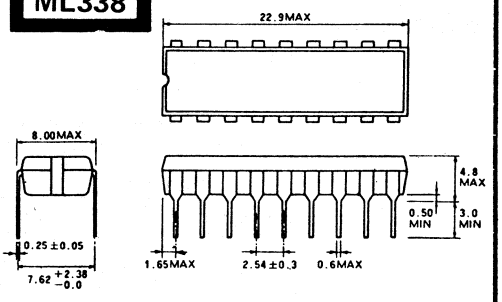

DIMENSIONS IN "MM"

ML339

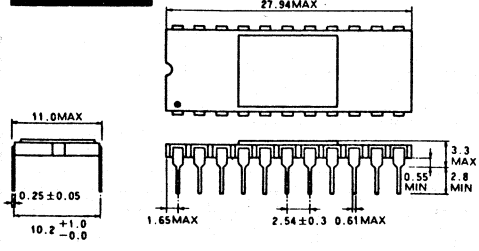

DIMENSIONS IN "MM"

ML340

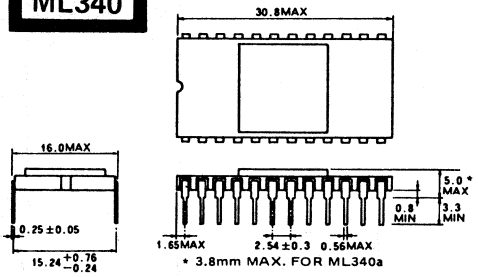

* 3.8mm MAX. FOR ML340a

DIMENSIONS IN "MM"

ML342

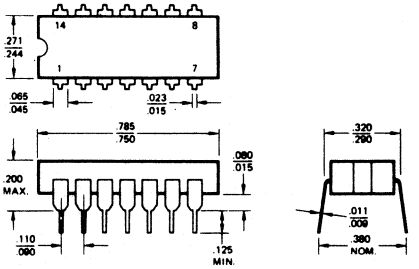

23. OUTLINE DRAWINGS

IN DRAWING NUMBER SEQUENCE

ML343

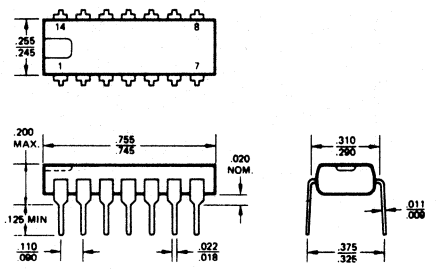

ML344

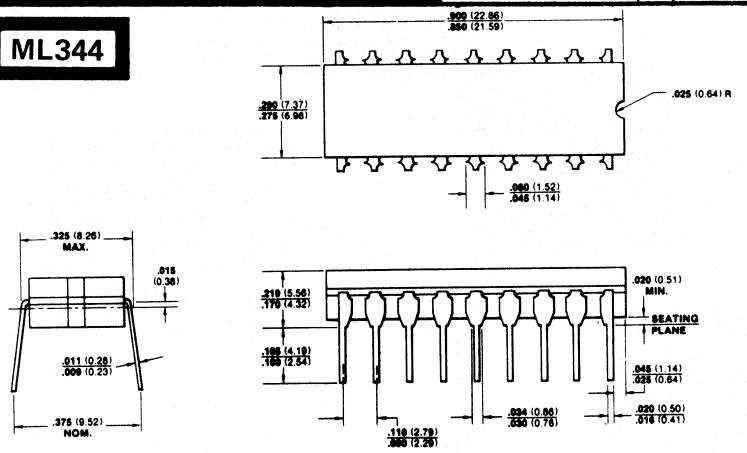

ML345

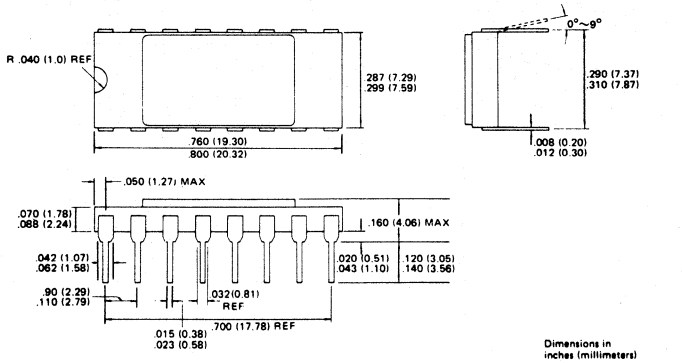

ML346

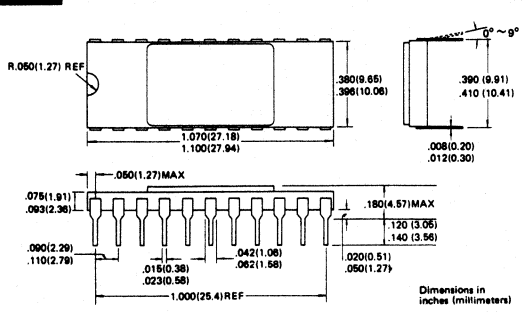

ML347

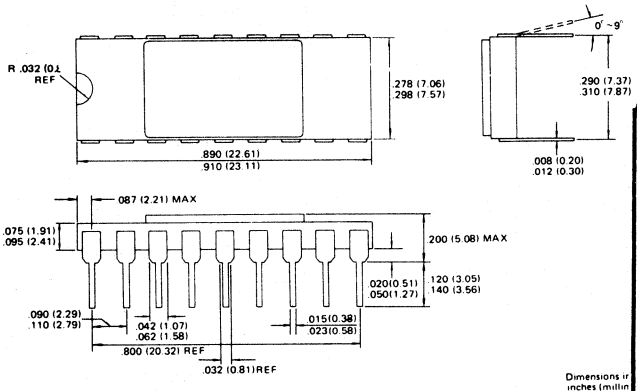

ML349

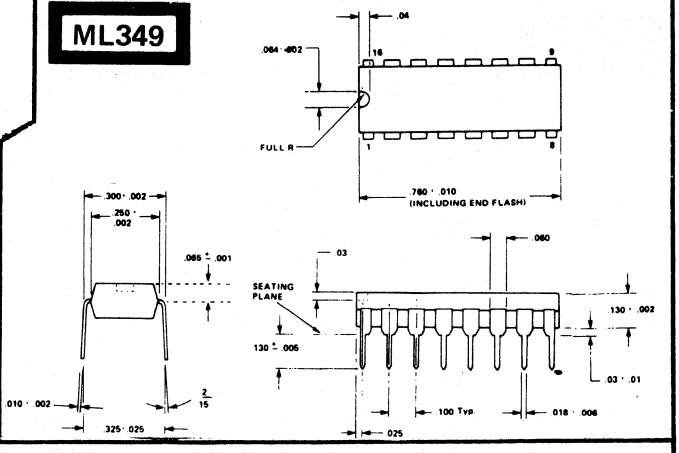

ML350

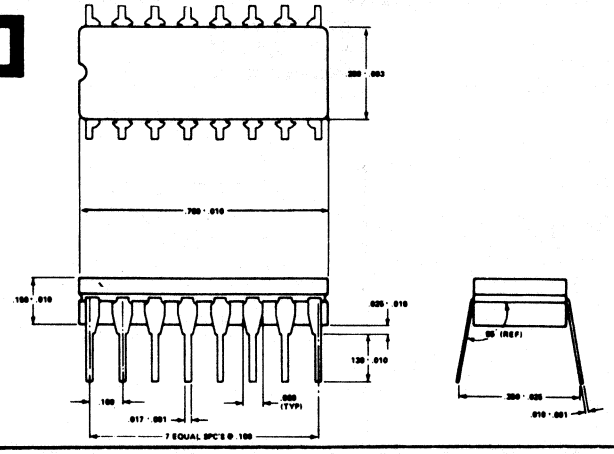

ML351

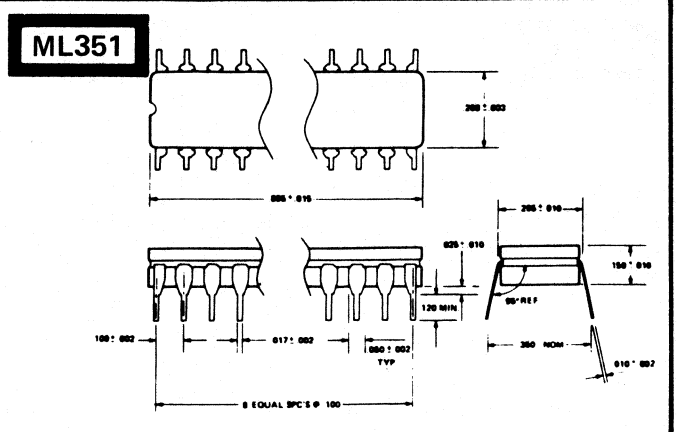

23. OUTLINE DRAWINGS

IN DRAWING NUMBER SEQUENCE

ML352

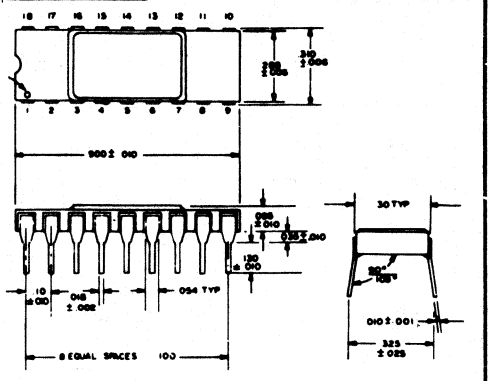

ML353

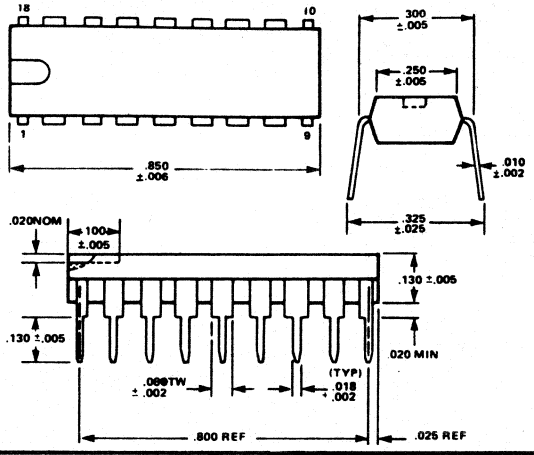

ML354

MM
(INCH)

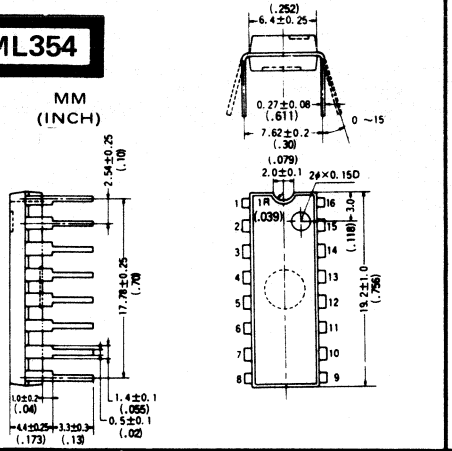

ML355

MM
(INCH)

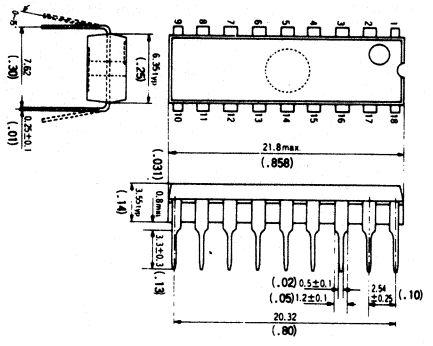

ML356

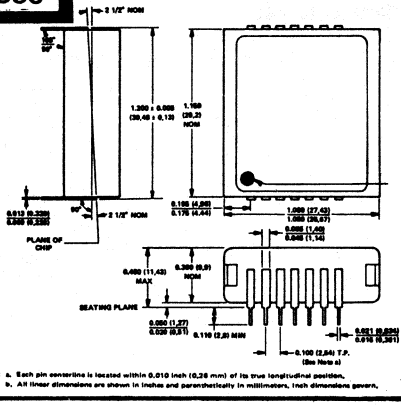

NOTES: a. Each pin centerline is located within 0.010 inch (0.38 mm) of its true longitudinal position.
b. All linear dimensions are shown in inches and parenthetically in millimeters. Inch dimensions govern.

ML357

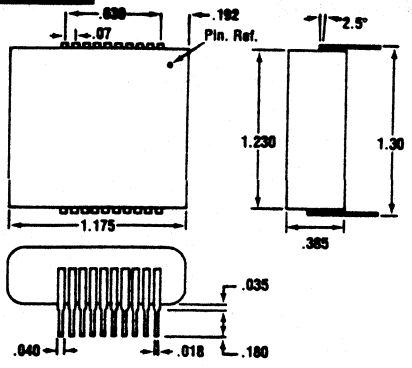

ML358

	No. of Pins	A	B	C	D	E	F	G	H	J	K	L
ML358	16	.790 .820	.280 .300	.200 MAX	.125 MIN	.090 .010	.050 TYP	.015 .022	.020 MIN	.010 TYP	.325 REF	0° 10°
ML358a	22	1.060 1.095	.380 .400	.200 MAX	.125 MIN	.090 .110	.050 TYP	.015 .022	.025 MIN	.010 TYP	.425 REF	0° 10°

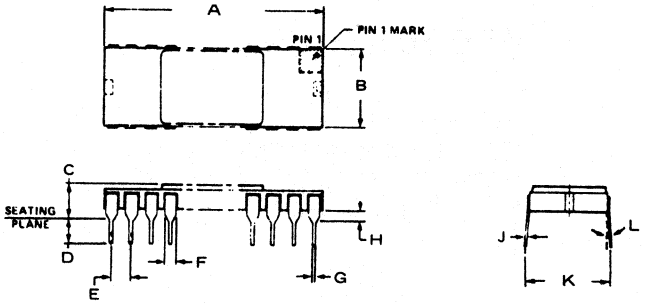

ML359

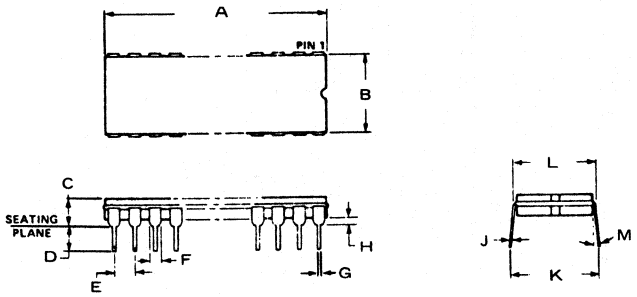

	No. of Pins	A	B	C	D	E	F	G	H	J	K	L	M
ML359	16	.750 .790	.265 .310	.200 MAX	.125 MIN	.090 .110	.060 TYP	.016 .020	.015 MIN	.010 TYP	.375 REF	.325 MAX	0° 15°
ML359a	18	.880 .920	.265 .310	.200 MAX	.125 MIN	.090 .110	.060 TYP	.016 .020	.015 MIN	.010 TYP	.375 REF	.325 MAX	0° 15°
ML359b	20	.950 .990	.265 .310	.200 MAX	.125 MIN	.090 .110	.060 TYP	.016 .020	.015 MIN	.010 TYP	.375 REF	.325 MAX	0° 15°
ML359c	22	1.060 1.095	.370 .400	.200 MAX	.125 MIN	.090 .110	.060 TYP	.016 .020	.015 MIN	.010 TYP	.475 REF	.425 MAX	0° 15°
ML359d	24	1.235 1.285	.515 .600	.220 MAX	.125 MIN	.090 .110	.060 TYP	.016 .020	.015 MIN	.010 TYP	.675 REF	.625 MAX	0° 15°

23. OUTLINE DRAWINGS

IN DRAWING NUMBER SEQUENCE

ML360

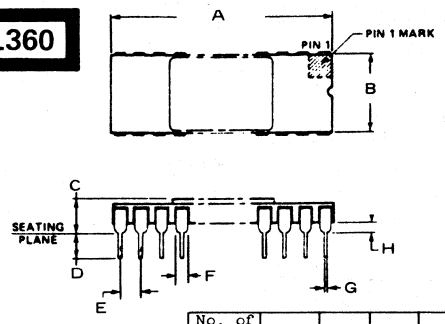

	No. of Pins	A	B	C	D	E	F	G	H	J	K	L
ML360	18	.880 .920	.280 .300	.200 MAX	.125 MIN	.090 .110	.050 TYP	.015 .022	.025 MIN	.010 TYP	.325 REF	0° 10°
ML360a	20	.970 .990	.280 .300	.200 MAX	.125 MIN	.090 .110	.050 TYP	.015 .022	.025 MIN	.010 TYP	.325 REF	0° 10°
ML360b	24	1.185 1.215	.570 .600	.200 MAX	.125 MIN	.090 .110	.050 TYP	.015 .022	.020 MIN	.010 TYP	.625 REF	0° 10°

ML362

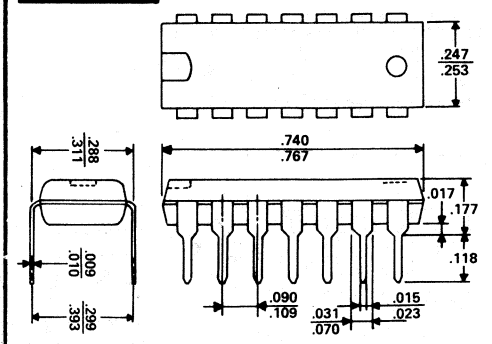

ML361

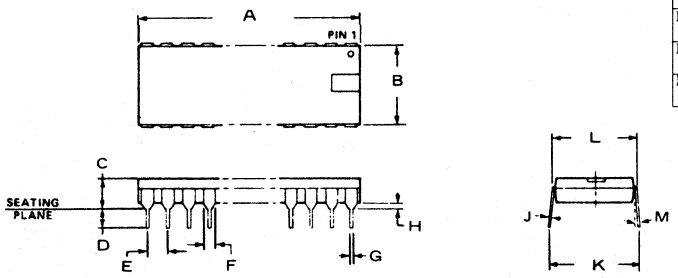

	No. of Pins	A	B	C	D	E	F	G	H	J	K	L	M
ML361	16	.825 .835	.245 .255	.200 MAX	.125 MIN	.090 .110	.060 TYP	.016 .020	.015 MIN	.010 TYP	.350 REF	.325 MAX	0° 15°
ML361a	18	.895 .905	.245 .255	.200 MAX	.125 MIN	.090 .110	.060 TYP	.016 .020	.015 MIN	.010 TYP	.350 REF	.325 MAX	0° 15°
ML361b	22	1.095 1.105	.345 .355	.200 MAX	.125 MIN	.090 .110	.060 TYP	.016 .020	.015 MIN	.010 TYP	.450 REF	.425 MAX	0° 15°
ML361c	24	1.235 1.245	.535 .545	.200 MAX	.125 MIN	.090 .110	.060 TYP	.016 .020	.015 MIN	.010 TYP	.650 REF	.625 MAX	0° 15°
ML361d	20	1.025 1.035	.245 .255	.200 MAX	.125 MIN	.090 .100	.060 TYP	.016 .020	.015 MIN	.010 TYP	.350 REF	.325 MAX	0° 15°

ML363

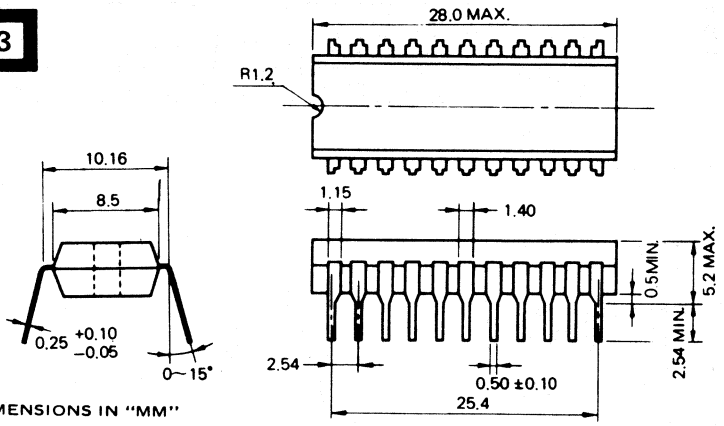

DIMENSIONS IN "MM"

ML364

DIMENSIONS IN "MM"

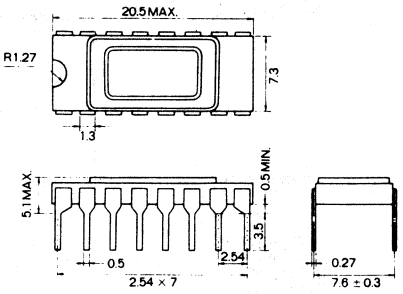

ML365

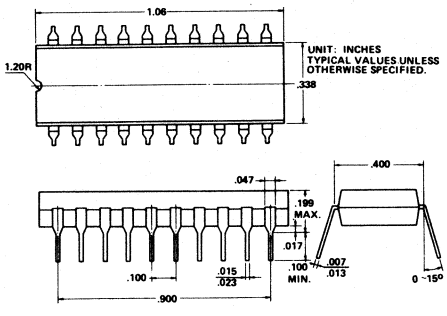

ML366

ITEM	MILLIMETERS	INCHES
A	32.5 MAX	1.28 MAX
B	2.54	0.1
C	1.20 MIN	0.047 MIN
D	27.94	1.1
E	0.5 ± 0.1	0.02 ± 0.004
F	3.2 MIN	0.126 MIN
G	5.2 MAX	0.205 MAX
H	1.0 MIN	0.04 MIN
I	15.24	0.6
J	13.9	0.55
K	0.30 ± 0.1	0.012 ± 0.004

TYPICAL DIMENSIONS UNLESS OTHERWISE SPECIFIED

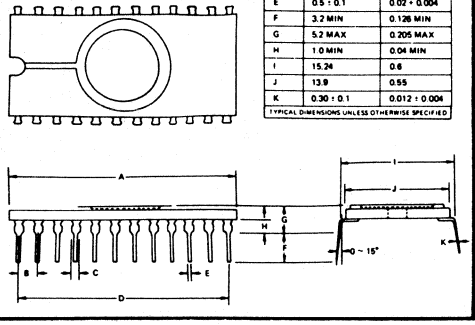

ML367

DIMENSIONS IN "MM"

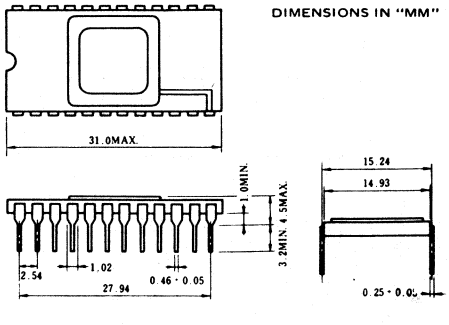

23. OUTLINE DRAWINGS

IN DRAWING NUMBER SEQUENCE

ML368

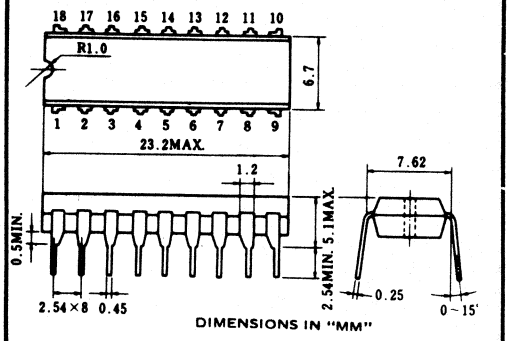

DIMENSIONS IN "MM"

ML369

Item	Millimeters	Inches
A	32.5 max	1.28 max
B	2.28	0.09
C	2.54	0.10
D	0.5 ± 0.1	0.02 ± 0.004
E	27.94	1.1
F	1.27	0.05
G	3.2 min	0.126 min
H	1.0 min	0.04 min
I	4.2 max	0.165 max
J	5.2 max	0.205 max
K	15.24	0.6
L	13.9	0.55
M	0.30 ± 0.1	0.012 ± 0.004

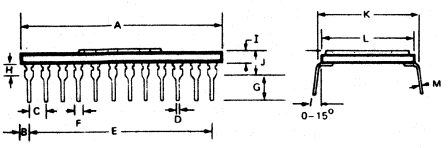

ML370

DIM	MILLIMETERS MIN	MILLIMETERS MAX	INCHES MIN	INCHES MAX
A	22.48	23.24	0.885	0.915
B	7.16	7.57	0.282	0.298
C	3.18	4.22	0.125	0.166
D	0.38	0.58	0.015	0.023
F	0.76	1.40	0.030	0.055
G	2.54 BSC		0.100 BSC	
H	1.02	1.52	0.040	0.060
J	0.20	0.30	0.008	0.012
K	2.68	4.44	0.105	0.175
L	7.37	7.87	0.290	0.310
M	–	10°	–	10°
N	0.38	1.40	0.015	0.055

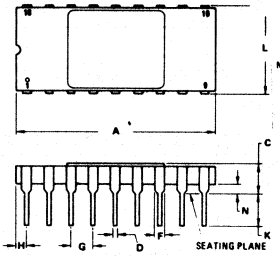

NOTES:
1. LEADS WITHIN 0.13 mm (0.005) RAD OF TRUE POSITION AT SEATING PLANE AT MAXIMUM MATERIAL CONDITION.
2. DIMENSION "L" TO CENTER OF LEADS WHEN FORMED PARALLEL.

ML371

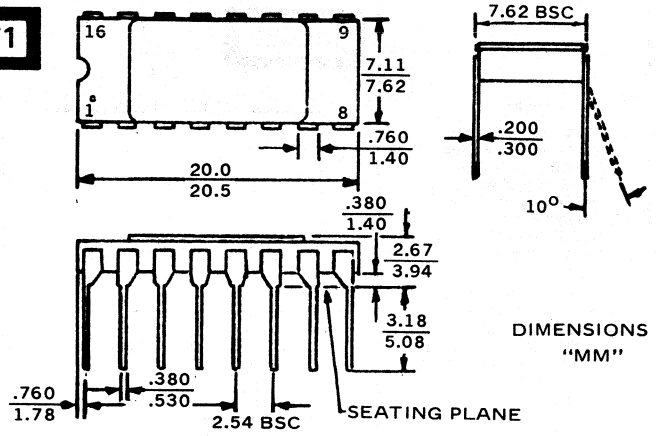

DIMENSIONS IN "MM"

ML372

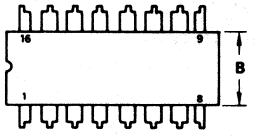

1. LEADS WITHIN 0.13 mm (0.005) RADIUS OF TRUE POSITION AT SEATING PLANE AT MAXIMUM MATERIAL CONDITION.
2. PACKAGE INDEX: NOTCH IN LEAD NOTCH IN CERAMIC OR INK DOT.
3. DIM "L" TO CENTER OF LEADS WHEN FORMED PARALLEL.
4. DIM "A" AND "B" DO NOT INCLUDE GLASS RUN-OUT.
5. DIM "F" MAY NARROW TO 0.76 mm (0.030) WHERE THE LEAD ENTERS THE CERAMIC BODY.

DIM	MILLIMETERS MIN	MILLIMETERS MAX	INCHES MIN	INCHES MAX
A	19.05	19.94	0.750	0.785
B	6.10	7.49	0.240	0.295
C	–	5.08	–	0.200
D	0.38	0.53	0.015	0.021
F	1.40	1.78	0.055	0.070
G	2.54 BSC		0.100 BSC	
H	0.51	1.14	0.020	0.045
J	0.20	0.30	0.008	0.012
K	3.18	5.08	0.125	0.200
L	7.62 BSC		0.300 BSC	
M	–	15°	–	15°
N	0.51	1.02	0.020	0.040

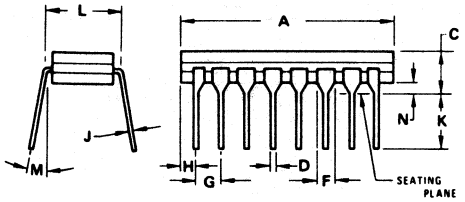

ML373

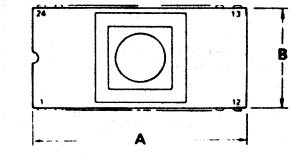

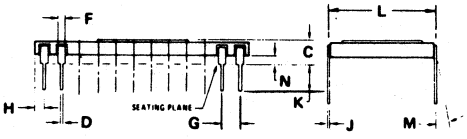

DIM	MILLIMETERS MIN	MILLIMETERS MAX	INCHES MIN	INCHES MAX
A	27.64	30.99	1.088	1.220
B	14.94	15.34	0.588	0.604
C	3.18	5.08	0.125	0.200
D	0.38	0.53	0.015	0.021
F	0.76	1.40	0.030	0.055
G	2.54 BSC		0.100 BSC	
H	0.76	1.78	0.030	0.070
J	0.20	0.30	0.008	0.012
K	2.54	4.19	0.100	0.165
L	14.99	15.49	0.590	0.610
M	–	10°	–	10°
N	1.02	1.52	0.040	0.060

NOTE:
1. LEADS TRUE POSITIONED WITHIN 0.25mm (0.010) DIA (AT SEATING PLANE) AT MAXIMUM MATERIAL CONDITION.
2. DIM "L" TO CENTER OF LEADS WHEN FORMED PARALLEL.

ML374

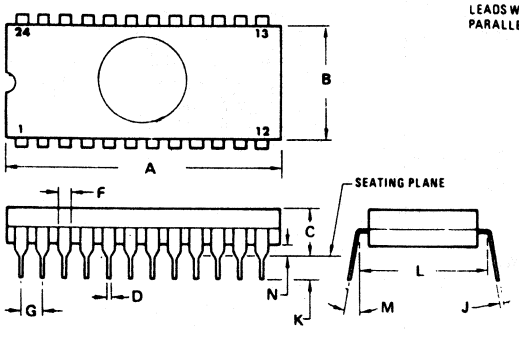

NOTES
1. DIM "L" TO CENTER OF LEADS WHEN FORMED PARALLEL
2. LEADS WITHIN 0.13 mm (0.005) RADIUS OF TRUE POSITION AT SEATING PLANE AT MAXIMUM MATERIAL CONDITION. (WHEN FORMED PARALLEL).

DIM	MILLIMETERS MIN	MILLIMETERS MAX	INCHES MIN	INCHES MAX
A	31.24	32.26	1.230	1.270
B	12.70	13.72	0.500	0.540
C	4.06	5.84	0.160	0.230
D	0.41	0.51	0.016	0.020
F	1.27	1.52	0.050	0.060
G	2.54 BSC		0.100 BSC	
J	0.20	0.30	0.008	0.012
K	2.29	4.06	0.090	0.160
L	15.24 BSC		0.600 BSC	
M	0°	15°	0°	15°
N	0.51	1.27	0.020	0.050

DIM	MILLIMETERS MIN	MILLIMETERS MAX	INCHES MIN	INCHES MAX
A	31.24	32.77	1.230	1.290
B	12.70	15.49	0.500	0.610
C	4.06	5.84	0.160	0.230
D	0.41	0.51	0.016	0.020
F	1.27	1.52	0.050	0.060
G	2.54 BSC		0.100 BSC	
J	0.20	0.30	0.008	0.012
K	2.29	4.06	0.090	0.160
L	15.24 BSC		0.600 BSC	
M	0°	15°	0°	15°
N	0.51	1.27	0.020	0.050

ML374a

ML375

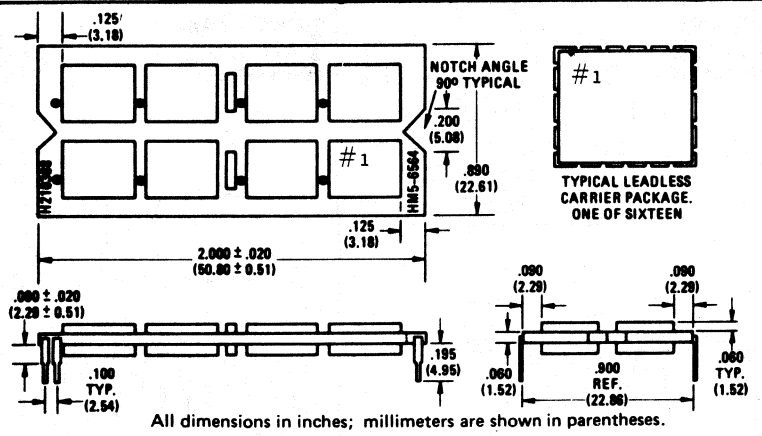

All dimensions in inches; millimeters are shown in parentheses.
All dimensions ±.010 (±0.25mm) unless otherwise shown.

ML376

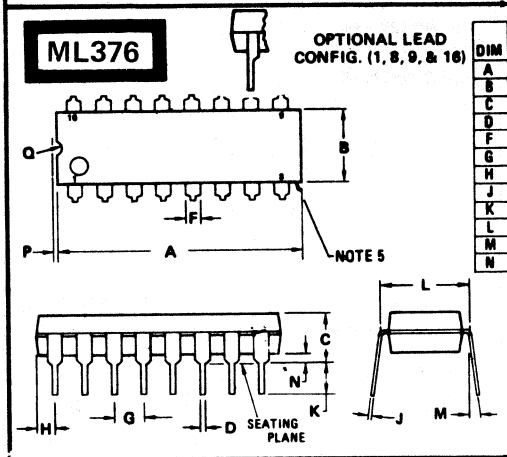

DIM	MILLIMETERS MIN	MILLIMETERS MAX	INCHES MIN	INCHES MAX
A	18.80	21.34	0.740	0.840
B	6.10	6.60	0.240	0.260
C	4.06	5.08	0.160	0.200
D	0.38	0.53	0.015	0.021
F	1.02	1.78	0.040	0.070
G	2.54 BSC		0.100 BSC	
H	0.38	2.41	0.015	0.095
J	0.20	0.38	0.008	0.015
K	2.92	3.43	0.115	0.135
L	7.62 BSC		0.300 BSC	
M	0°	10°	0°	10°
N	0.51	1.02	0.020	0.040

NOTES:

1. LEADS WITHIN 0.13 mm (0.005) RADIUS OF TRUE POSITION AT SEATING PLANE AT MAXIMUM MATERIAL CONDITION.
2. DIMENSION "L" TO CENTER OF LEADS WHEN FORMED PARALLEL.
3. DIMENSION "B" DOES NOT INCLUDE MOLD FLASH.
4. "F" DIMENSION IS FOR FULL LEADS. "HALF" LEADS ARE OPTIONAL AT LEAD POSITIONS 1, 8, 9, and 16).
5. ROUNDED CORNERS OPTIONAL.

ML380

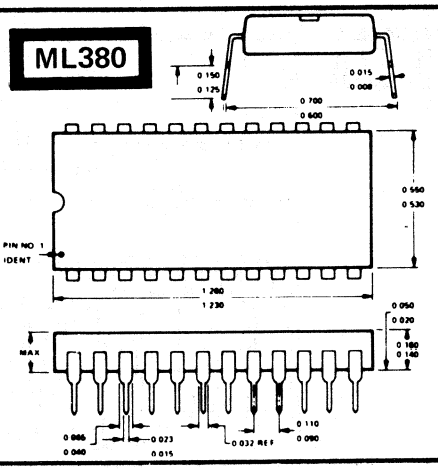

ML377

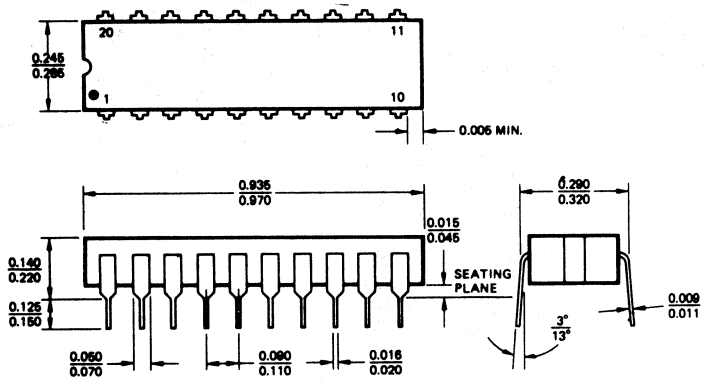

ML381

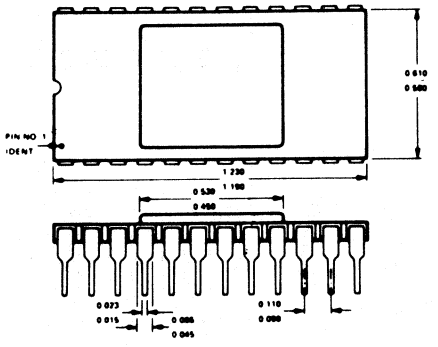

ML378

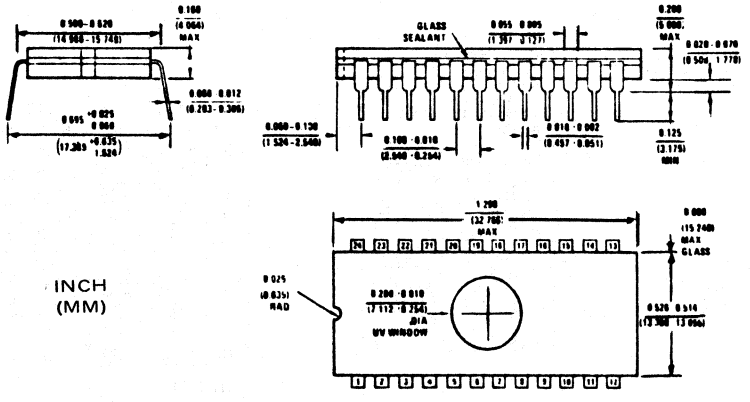

23. OUTLINE DRAWINGS

IN DRAWING NUMBER SEQUENCE

ML382

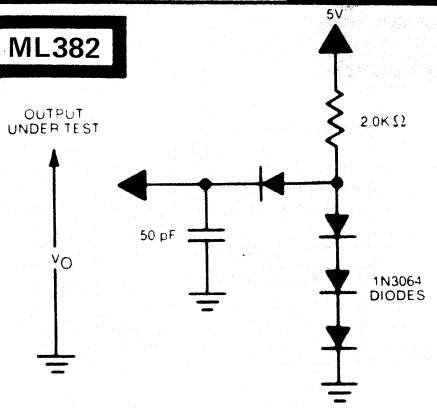

• Capacitive loading to simulate effect of seven additional outputs plus one TTL input

ML383

DIM	"A" CERAMIC PACKAGE MILLIMETERS MIN	MAX	INCHES MIN	MAX
A	22.6	23.1	0.890	0.910
B	–	3.18	–	0.125
C	0.38	0.53	0.015	0.021
D	7.06	7.57	0.278	0.298
E	2.29	2.79	0.090	0.110
F	0.64	1.65	0.025	0.065
G	0.20	0.31	0.008	0.012
H	2.54	3.81	0.100	0.150
J	7.62 REF		0.300 REF	

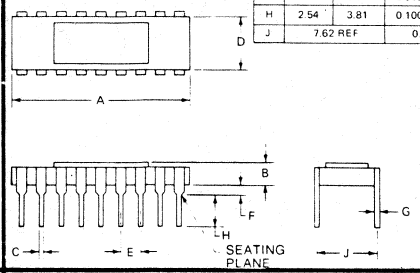

ML384

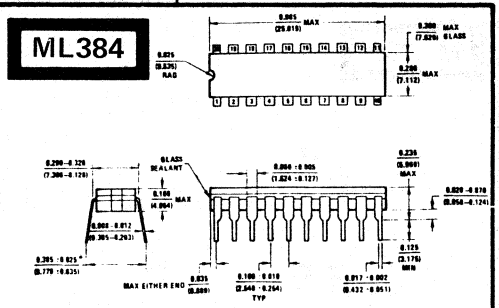

NS Package J20B
20-Lead Cavity DIP (J)

* If parts are burned-in, they will be formed to $0.325^{+0.025}_{-0.015}$ $\left(8.255^{+0.635}_{-0.381}\right)$

ML386

DIM	MILLIMETERS MIN	MAX	INCHES MIN	MAX
A	25.65	27.18	1.010	1.070
B	9.14	9.91	0.360	0.390
C	3.56	4.57	0.140	0.180
D	0.38	0.53	0.015	0.021
F	1.27	1.65	0.050	0.065
G	2.54 BSC		0.100 BSC	
H	0.51	1.27	0.020	0.050
J	0.20	0.30	0.008	0.012
K	2.54	4.32	0.100	0.170
L	10.16 BSC		0.400 BSC	
M	0°	15°	0°	15°
N	0.51	1.27	0.020	0.050

NOTES:
1. LEADS TRUE POSITIONED WITHIN 0.25 mm (0.010) DIA AT SEATING PLANE AT MAXIMUM MATERIAL CONDITION (DIM "D").
2. DIM "L" TO CENTER OF LEADS WHEN FORMED PARALLEL.

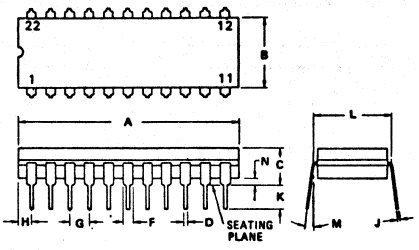

ML387

NOTES:
1. LEADS, TRUE POSITIONED WITHIN 0.25 mm (0.010) DIA. AT SEATING PLANE, AT MAXIMUM MATERIAL CONDITION.
2. DIM "L" TO CENTER OF LEADS WHEN FORMED PARALLEL.
3. DIM "A" & "B" INCLUDES MENISCUS.

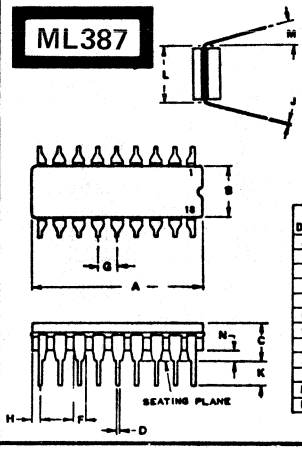

DIM	MILLIMETERS MIN	MAX	INCHES MIN	MAX
A	22.35	23.11	0.880	0.910
B	6.10	7.49	0.240	0.295
C	–	5.08	–	0.200
D	0.38	0.53	0.015	0.021
F	1.40	1.78	0.055	0.070
G	2.54 BSC		0.100 BSC	
H	0.51	1.14	0.020	0.045
J	0.20	0.30	0.008	0.012
K	3.18	5.08	0.125	0.200
L	7.62 BSC		0.300 BSC	
M	0°	15°	0°	15°
N	0.51	1.02	0.020	0.030

ML388

NOTES:
1. POSITIONAL TOLERANCE OF LEADS (D), SHALL BE WITHIN 0.25mm(0.010) AT MAXIMUM MATERIAL CONDITION, IN RELATION TO SEATING PLANE AND EACH OTHER.
2. DIMENSION L TO CENTER OF LEADS WHEN FORMED PARALLEL.
3. DIMENSION B DOES NOT INCLUDE MOLD FLASH.

DIM	MILLIMETERS MIN	MAX	INCHES MIN	MAX
A	22.22	23.24	0.875	0.915
B	6.10	6.60	0.240	0.260
C	3.94	4.57	0.155	0.180
D	0.36	0.56	0.014	0.022
F	1.27	1.78	0.050	0.070
G	2.54 BSC		0.100 BSC	
H	1.02	1.52	0.040	0.060
J	0.20	0.30	0.008	0.012
K	2.92	3.43	0.115	0.135
L	7.62 BSC		0.300 BSC	
M	0°	15°	0°	15°
N	0.51	1.52	0.020	0.060

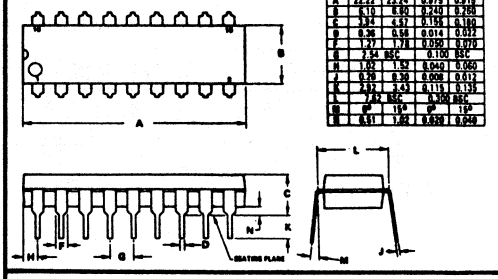

ML389

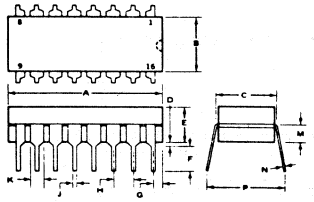

	A	B	C	E	N	F	G	H	I	K	M	N	E	SG MARKS
DL6	.755 .785	.280 MAX	.290 .310	.020 .040	.145 .175	.125 .165	.015 .050	.090 .110	.015 .023	.070 .090	.090	.004 .014	.325 .375	
DL6a	.735 .785	.245 .265	.290 .310	.020 .040	.160 MAX	.100 .150	.015 .055	.090 .110		.045 .070	.152 .183	.008 .012	.290 .410	NC TCH
DL6b	.750 .770	.255 .295	.320 .370	.020 .060	.160 .175	.100 .193	.015 .042	.090 .110	.016 .020	.045 .065		.009 .011	.375 .410	NC TCH
DL6c	.750 .780	.245 .275	.290 .310	.020 .041	.160 .175	.125 .160	.020 .042	.100	.015 .020	.135 .165		.008 .012		NC TCH
DL6d	.735 .785	.245 .300	.290 .310	.020 MIN	.160	.100 .125	.015 MIN	.100	.015 .023			.008 .014		NC TCH
DL6e	.750 .785	.265 .291	.290 .320	.015 .060	.320 MIN	.125 .175	.010 MIN	.050 .110				.009 .011	.340	NC TCH
DL6f	.744 MAX	.250	.300	.019 .063	.140 MAX	.100		.100	.014 .024	.059		.008 .014		NC TCH
DL6g	.743 MAX	.251	.300	.019 MIN	.160 MAX	.100 MIN		.100	.014 .024	.051		.008 .014		NC TCH
DL6h	.750 .785	.245 .271	.290 .310	.015 MIN	.145 MAX	.125 MIN		.090 .110	.016 .020	.045 .065		.009 .011	.375 N.S.	NC TCH
DL6j	.750 .785	.265 .291	.290 .310	.015 MIN	.145 MAX	.125 MIN		.090 .110	.016 .020	.045 .065		.009 .011	.375 N.S.	NC TCH
DL6k	.740 .761	.240 .260	.290 .310	.015 .045	.145 MAX	.100 .140		.090 .110	.016 .020	.045 .065		.009 .011	.375 N.S.	NC TCH
DL6l	.750 .785	.245 .265	.290 .320	.020 .040		.125 .160	.015 .060	.100	.015 .020	.035 .065		.009 .012		NC TCH
DL6m	.759	.248	.300	.019 MIN	.1e1	.100 MIN		.090 .110	.015 .025	.051		.008 .015		NC TCH
DL6n	.753 .767	.241 .249	.307 .317		.148								.320 .340	NC TCH
DL6p	.735 .790	.265 .300	.290 .320	.015 .055	.175 MAX	.125 .165	.070 MAX	.090 .110	.016 .020	.055 .065		.008 .012		NC TCH
DL6q	.735 MAX	.291 MAX	.310 .320	.050 .070	.160 MAX	.125 MIN	.050 MAX	.090 .110	.016 .020	.055 .065		.009 .012	.360 .410	NC TCH
DL6r	.745 .775	.240 .260		.015 .060	.160 .200	.125 .150	.010 .045	.090 .110	.016 .020	.055 .065		.009 .011	.310 .365	NC TCH
DL6s	.745 .785	.241 .318	.290 .320	.015 .060	.160 .200	.125 .150	.005	.090 .110	.016 .020	.050 .070		.009 .011		NC TCH

ML390

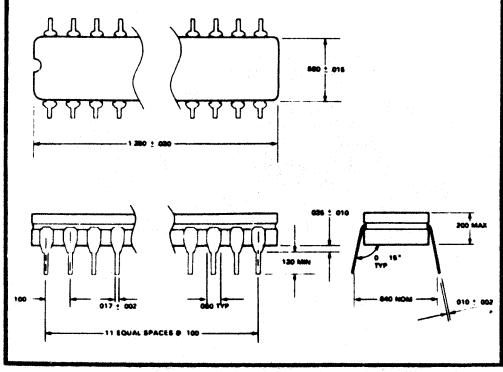

ML391

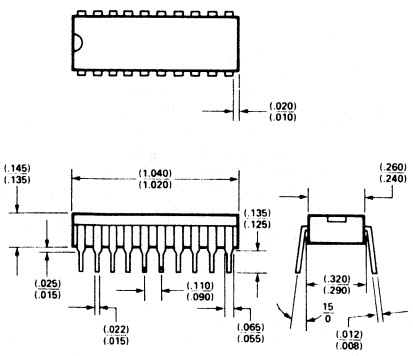

ML392

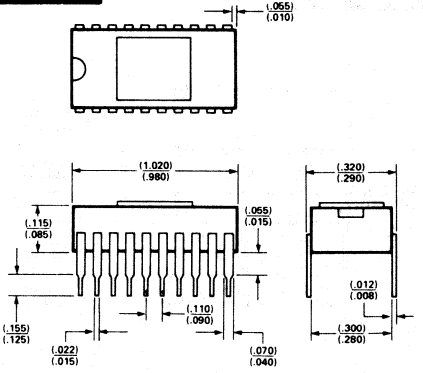

23. OUTLINE DRAWINGS

IN DRAWING NUMBER SEQUENCE

ML393

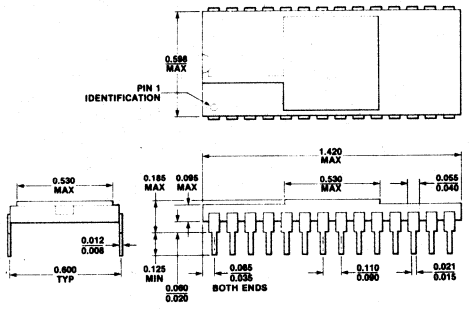

ML394

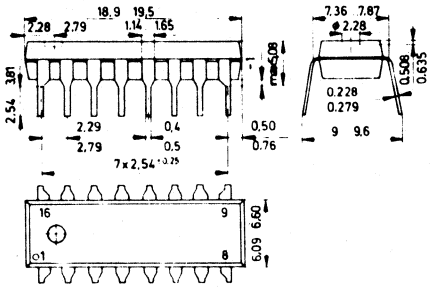

ML395

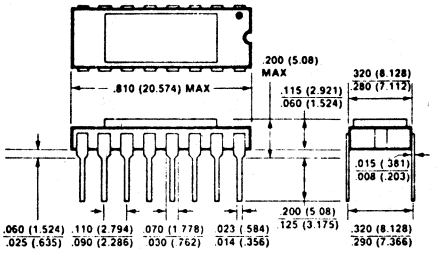

ML396

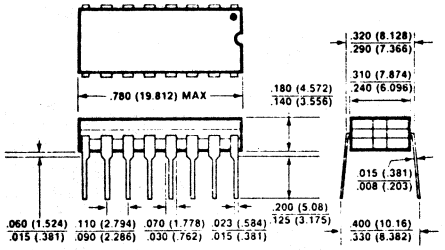

ML397

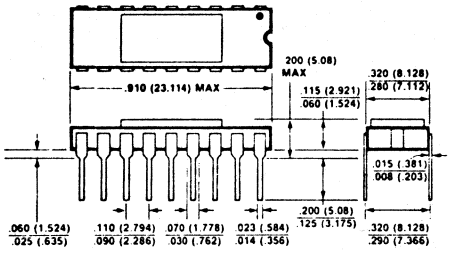

ML398

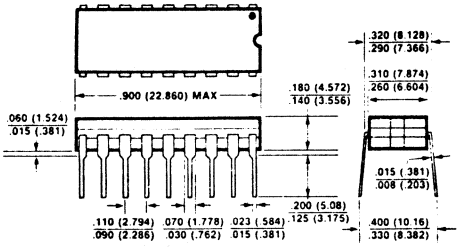

ML399

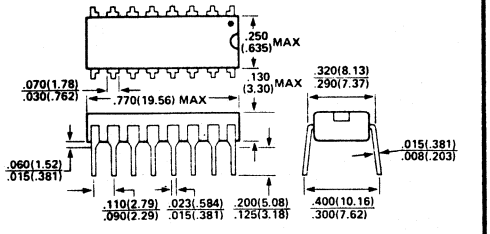

ML400

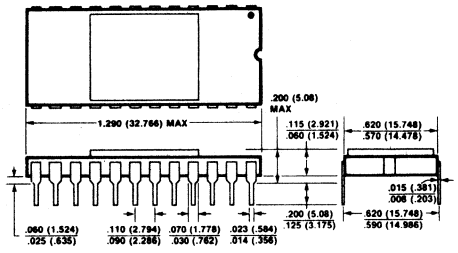

ML401

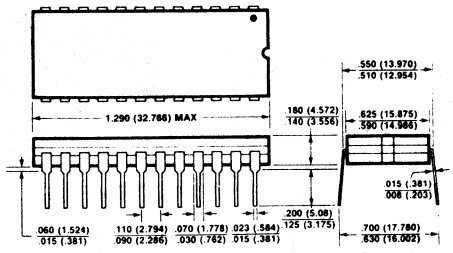

ML402

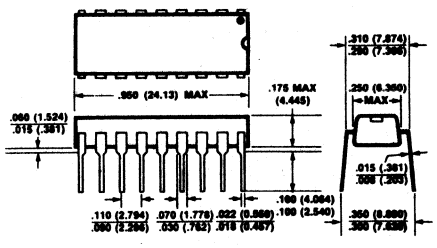

ML403

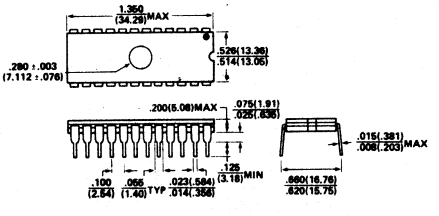

NOTE: All dimensions in parenthesis are metric.

ML404

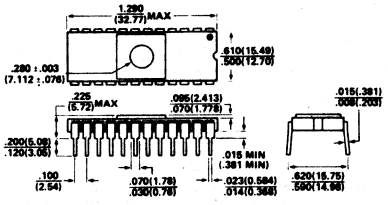

23. OUTLINE DRAWINGS

IN DRAWING NUMBER SEQUENCE

ML405

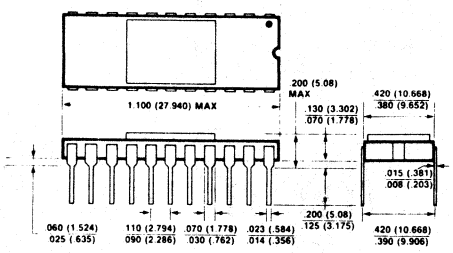

ML406

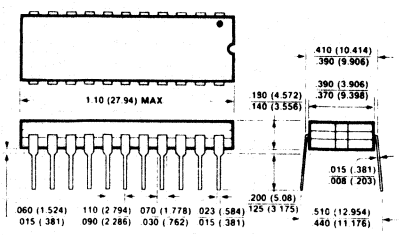

ML407

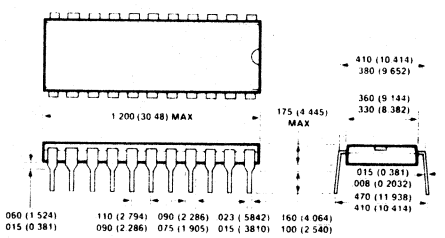

ML408

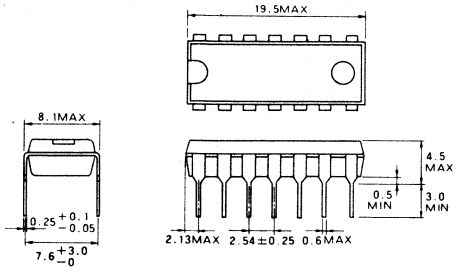

ML409

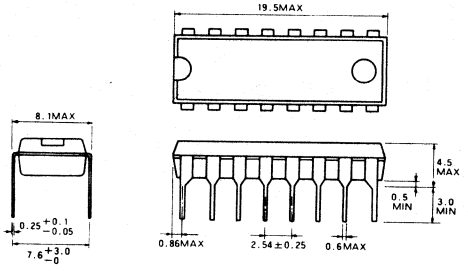

ML412

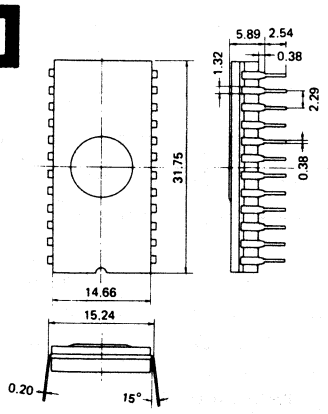

ML413

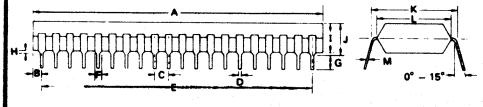

Plastic

ITEM	MILLIMETERS	INCHES
A	51.5 MAX	2.028 MAX
B	1.62	0.064
C	2.54 ± 0.1	0.10 ± 0.004
D	0.5 ± 0.1	0.019 ± 0.004
E	48.26	1.9
F	1.2 MIN	0.047 MIN
G	2.54 MIN	0.10 MIN
H	0.5 MIN	0.019 MIN
I	5.22 MAX	0.206 MAX
J	5.72 MAX	0.225 MAX
K	15.24	0.600
L	13.2	0.520
M	0.25 +0.1 −0.05	0.010 +0.004 −0.002

ML414

Ceramic

ITEM	MILLIMETERS	INCHES
A	51.5 MAX.	2.03 MAX.
B	1.62 MAX.	0.06 MAX.
C	2.54 ± 0.1	0.1 ± 0.004
D	0.5 ± 0.1	0.02 ± 0.004
E	48.26 ± 0.1	1.9 ± 0.004
F	1.02 MIN.	0.04 MIN.
G	3.2 MIN.	0.13 MIN.
H	1.0 MIN.	0.04 MIN.
I	3.5 MAX.	0.14 MAX.
J	4.5 MAX.	0.18 MAX.
K	15.24 TYP.	0.6 TYP.
L	14.93 TYP.	0.59 TYP.
M	0.25 ± 0.05	0.01 ± 0.0019

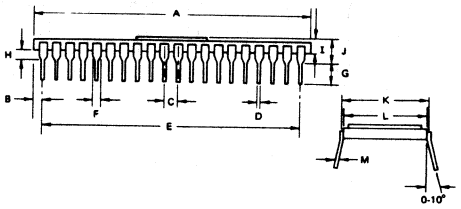

ML415

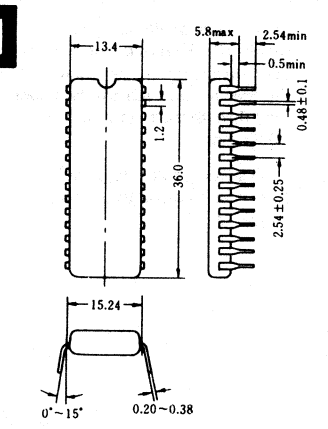

ML416

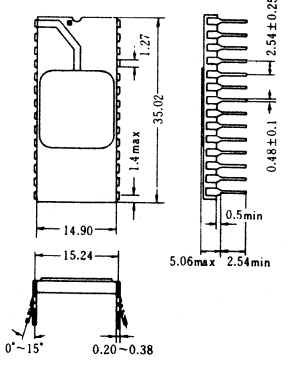

23. OUTLINE DRAWINGS

IN DRAWING NUMBER SEQUENCE

ML417

PACKAGING

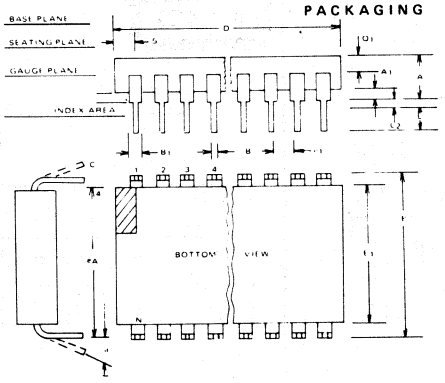

40-Lead

SYMBOL	INCHES MIN	INCHES MAX	NOTE	MILLIMETERS MIN	MILLIMETERS MAX
A A_1	0.090 0.020	0.150 0.055	2	2.29 0.51	3.81 1.65
B B_1	0.015 0.030	0.020 0.055		0.381 0.76	0.508 1.397
C D	0.008 1.980	0.012 2.020		0.204 50.29	0.304 51.32
E E_1	0.590 0.568	0.625 0.588		14.98 14.43	15.87 14.93
e_1 e_A	0.100 TP 0.600 Tp		3 3	2.54 TP 15.24 TP	
L L_2	0.100 0.000	0.180 0.030	3	2.54 0.00	4.57 0.76
J	0	15°	4	0°	15°
N N_1	40 0		5 6	40 0	
Q_1 S	0.020 0.020	0.080 0.060		0.51 0.51	2.03 1.52

ML418

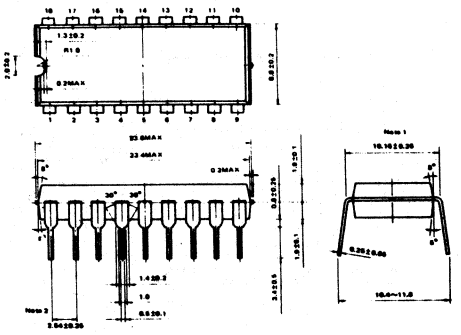

ML419

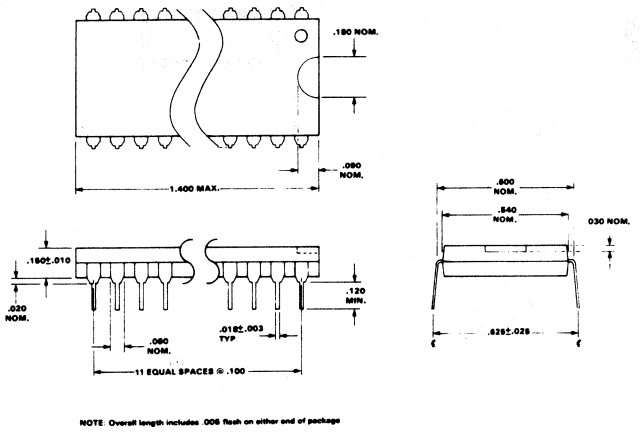

NOTE: Overall length includes .006 flash on either end of package

ML420

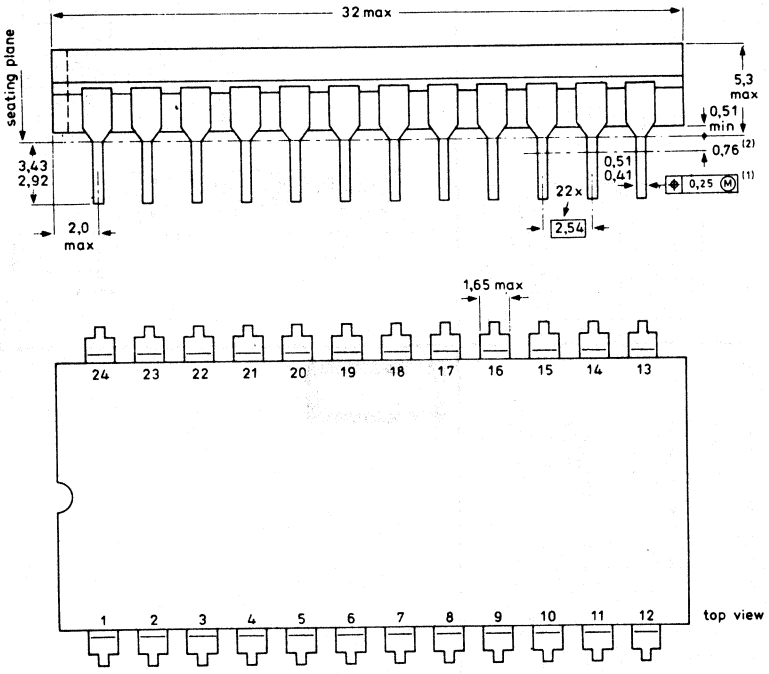

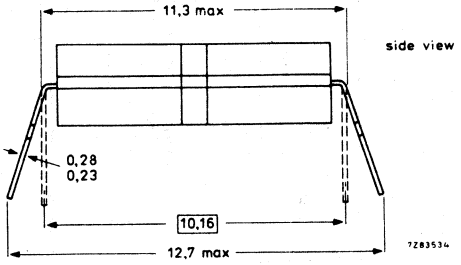

⊕ Positional accuracy.

Ⓜ Maximum Material Condition.

(1) Centre-lines of all leads are within ±0,125 mm of the nominal position shown; in the worst case, the spacing between any two leads may deviate from nominal by ±0,25 mm.

(2) Lead spacing tolerances apply from seating plane to the line indicated.

ML421

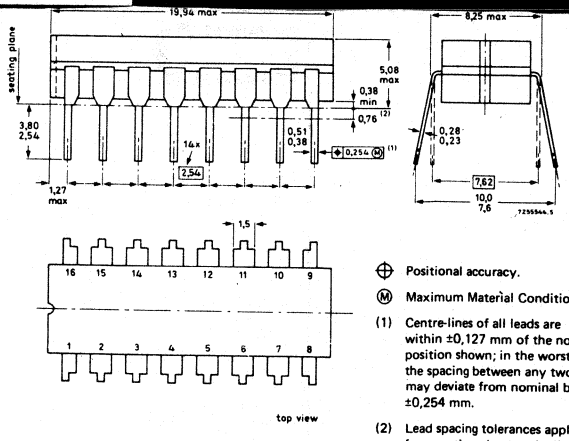

⊕ Positional accuracy.

Ⓜ Maximum Material Condition.

(1) Centre-lines of all leads are within ±0,127 mm of the nominal position shown; in the worst case, the spacing between any two leads may deviate from nominal by ±0,254 mm.

(2) Lead spacing tolerances apply from seating plane to the line indicated.

ML422

Dimension	Inches		Millimeters	
	Min.	Max.	Min.	Max.
A		.200		5.08
B	.014	.023	.36	.58
C	.030	.070	.76	1.78
D	.008	.015	.20	.38
E		.840		21.34
F	.220	.310	5.59	7.87
G	.290	.320	7.37	8.13
H	.100BSC		2.54BSC	
J	.125	.200	3.18	5.08
K	.150		3.81	
L	.015	.060	.38	1.52
M		.080		2.03
N	.005		.13	
P	0°	15°	0°	15°

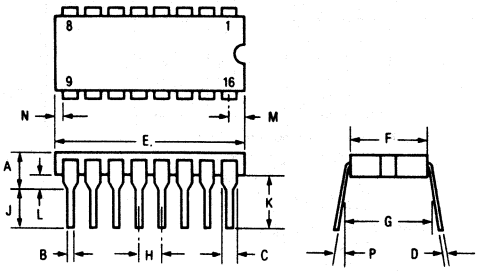

ML423

Dimension	Inches		Millimeters	
	Min.	Max.	Min.	Max.
A		.225		5.72
B	.014	.023	.36	.58
C	.030	.070	.76	1.78
D	.008	.015	.20	.38
E		1.290		32.77
F	.500	.610	12.70	15.49
G	.590	.620	14.99	15.75
H	.100BSC		2.54BSC	
J	.120	.200	3.05	5.08
K	.150		3.81	
L	.015	.075	.38	1.91
M		.098		2.49
N	.005		.13	
P	0°	15°	0°	15°

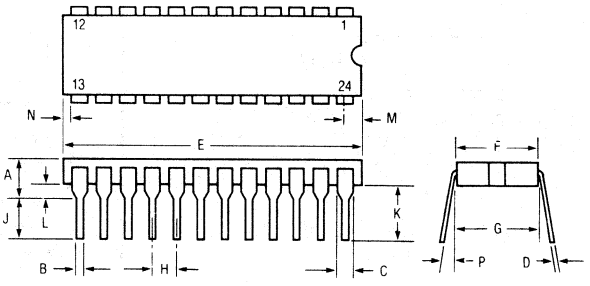

ML424

Dimension	Inches		Millimeters	
	Min.	Max.	Min.	Max.
A		.225		5.72
B	.014	.023	.36	.58
C	.030	.070	.76	1.78
D	.008	.015	.20	.38
E		1.290		32.77
F		.302		7.67
G	.290	.320	7.37	8.13
H	.100BSC		2.54BSC	
J	.120	.200	3.05	5.08
K	.150		3.81	
L	.015	.075	.38	1.91
M		.098		2.49
N	.005		.13	
P	0°	15°	0°	15°

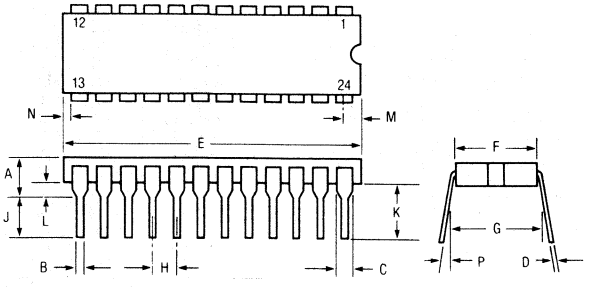

23. OUTLINE DRAWINGS

IN DRAWING NUMBER SEQUENCE

ML425

Dimension	Inches Min.	Inches Max.	Millimeters Min.	Millimeters Max.
A		200		5.08
B	014	023	36	58
C	030	070	76	1 78
D	008	015	20	38
E	930	975	23 60	24 80
F	220	310	5 59	7 87
G	290	320	7 37	8 13
H	100BSC		2 54BSC	
J	120	200	3 05	5 08
K	150		3 81	
L	015	060	38	1 52
M		098		2 49
N	005		13	2 49
P	0°	15°	0°	15°

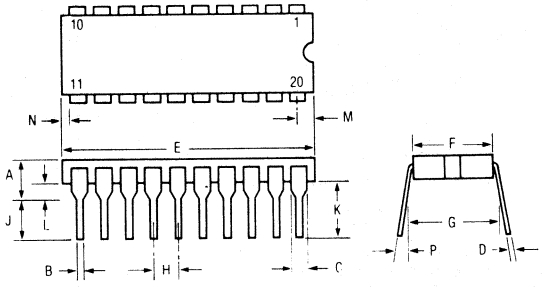

ML427

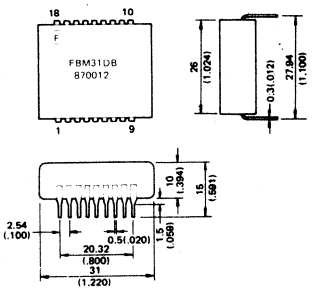

ML428

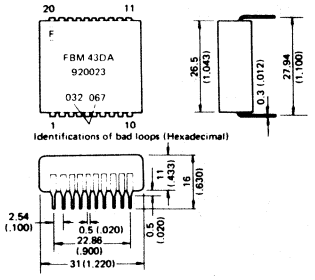

ML429

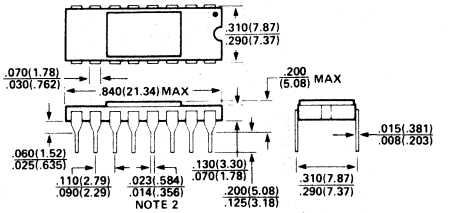

ML430

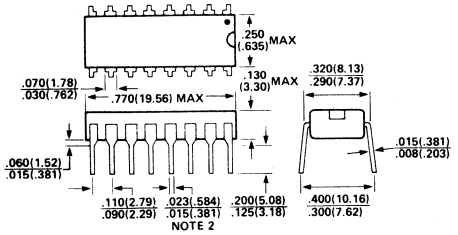

ML431

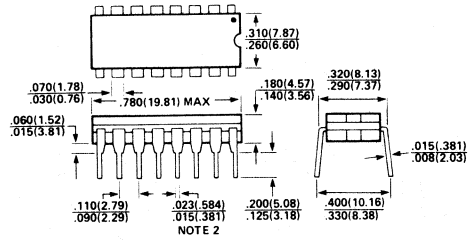

ML432

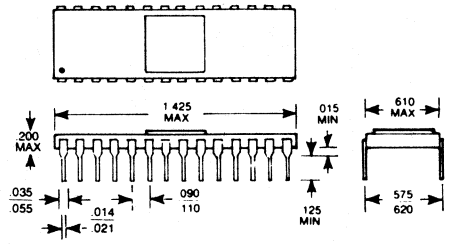

ML433

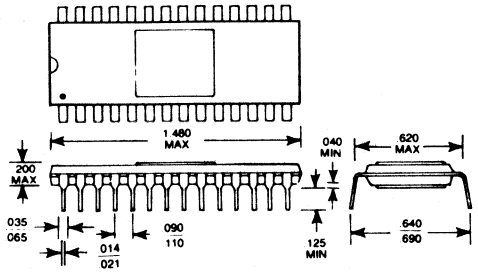

ML434

NOTES

1. Index area, a notch or a dot shall be located adjacent to pin 1 (or alternatively on pin 1 itself) and shall be within the shaded area shown.
2. Dimension Q shall be measured from the seating plane to the base plane.
3. This dimension allows for off center lid, meniscus and glass overrun.
4. The true position pin spacing is 0.100 (2.54 mm) between centerlines. Each pin centerline shall be located within ±0.010 (0.25 mm) of its true longitudinal position relative to pins 1 and 24.
5. Applies to all four corners.
6. Lead center when α is 0°
7. All leads.
8. Twenty-two spaces.

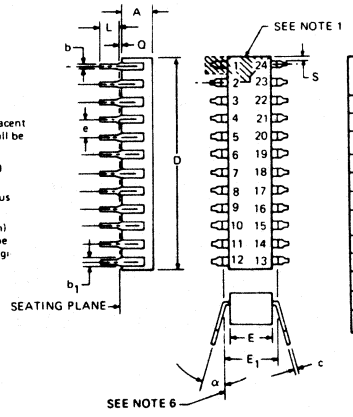

SYMBOL	INCHES MIN	INCHES MAX	MILLIMETERS MIN	MILLIMETERS MAX	NOTES
A		0.200		5.08	
b	0.014	0.023	0.36	0.58	7
b_1	0.030	0.070	0.76	1.78	7
c	0.008	0.015	0.20	0.38	7
D	1.140	1.290	28.96	32.77	
E	0.515	0.610	13.08	15.49	
E_1	0.590	0.620	14.97	15.75	3
e	0.100 T P		2.54 T P		4,8
L	0.125	0.200	3.18	5.08	
Q	0.015	0.080	0.38	2.03	2
S	0.010	0.055	0.25	1.40	5
α	0°	15°	0°	15°	6

23. OUTLINE DRAWINGS

IN DRAWING NUMBER SEQUENCE

ML435

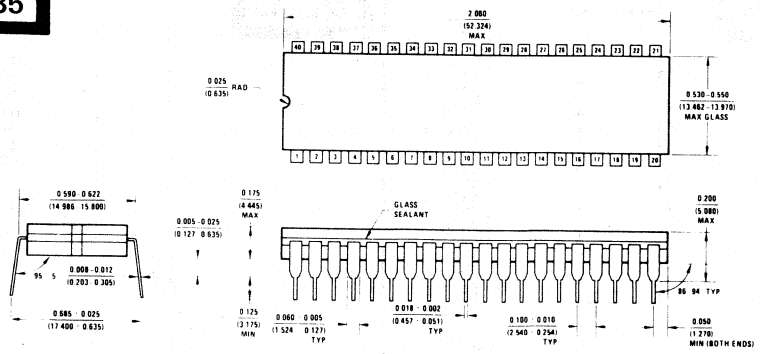

Ceramic Dual-In-Line Package [Cerdip (J)]

ML436

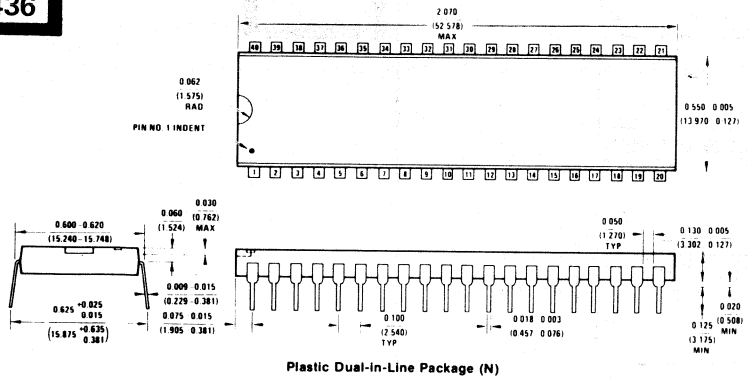

Plastic Dual-In-Line Package (N)

ML437

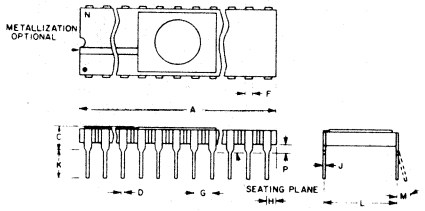

SYMBOL	INCHES		NOTE	MILLIMETERS	
	MIN.	MAX.		MIN.	MAX.
A	1.180	1.220		29.98	30.98
C	0.115	0.175		2.93	4.44
D	0.015	0.023		0.39	0.58
F	0.040 REF.			1.02 REF.	
G	0.100 BSC		1	2.54 BSC	
H	0.030	0.070		0.77	1.77
J	0.008	0.012	3	0.21	0.30
K	0.125	0.175		3.18	4.44
L	0.580	0.620	2	14.74	15.74
M	–	7		–	7
P	0.025	0.050		0.64	1.27
N	24			24	

ML438

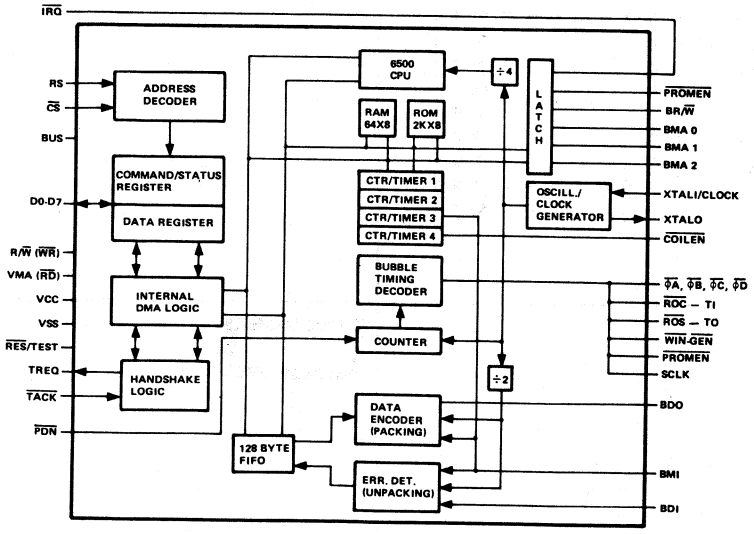

NOTE 1 : Names preceding parentheses are for R6502/6800 type Bus with a single R/W select line (Bus = 0);

NOTE 2: Names within parentheses indicate functions for a 8080 type Bus with separate read and write strobes (Bus = 1). These signals can also be used with a demultiplexed 8085 type Bus.

NOTE 3: For R6502 systems connect VMA to the host $\phi 2$.

ML439

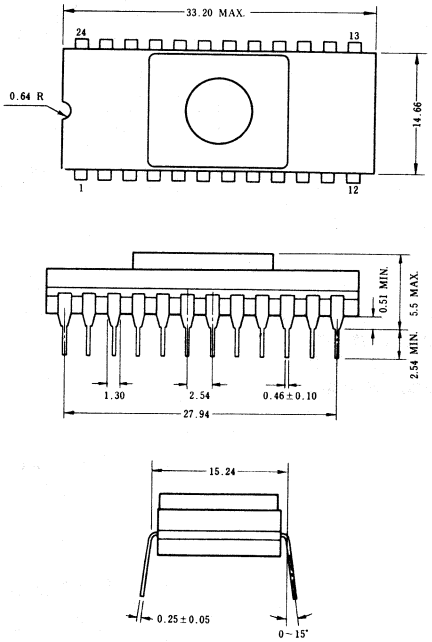

23. OUTLINE DRAWINGS

IN DRAWING NUMBER SEQUENCE

ML440

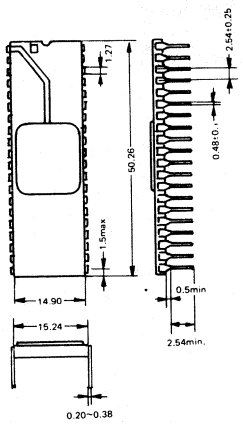

ML441

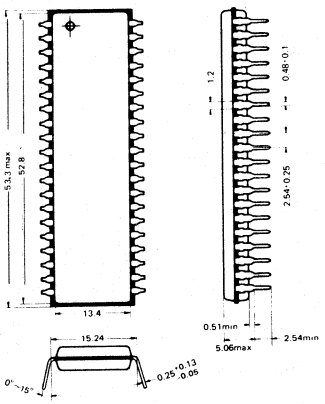

ML442

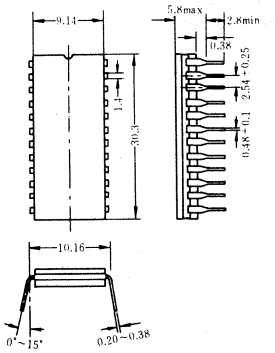

ML443

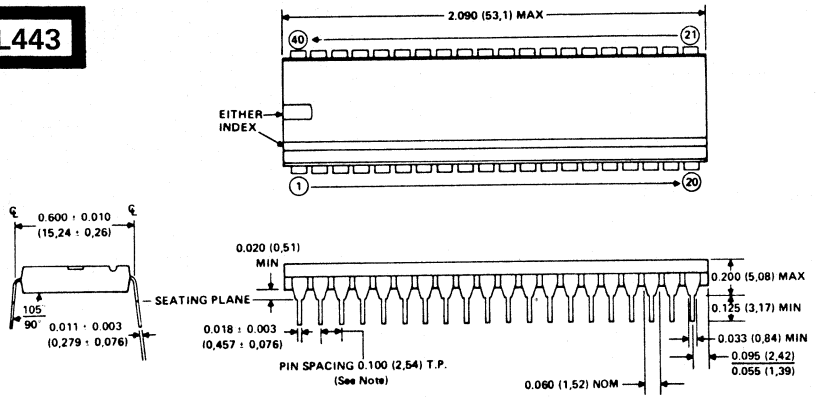

ML445

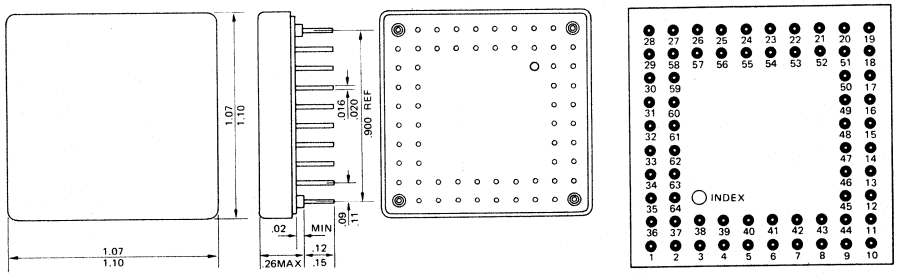

ML446

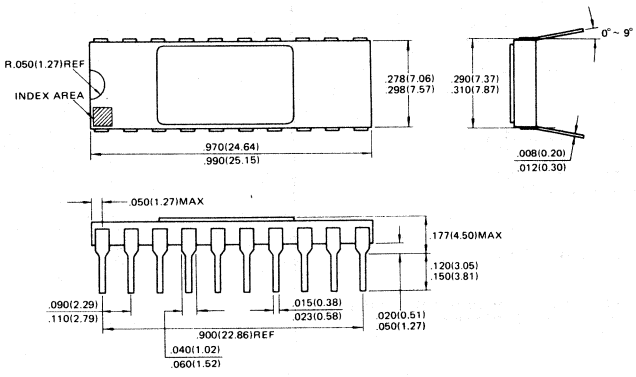

23. OUTLINE DRAWINGS

IN DRAWING NUMBER SEQUENCE

ML447

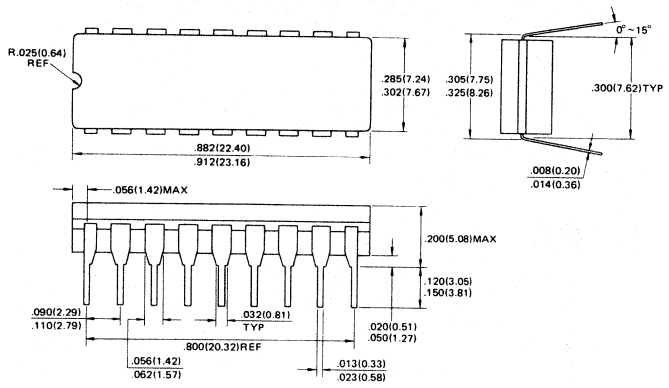

ML448

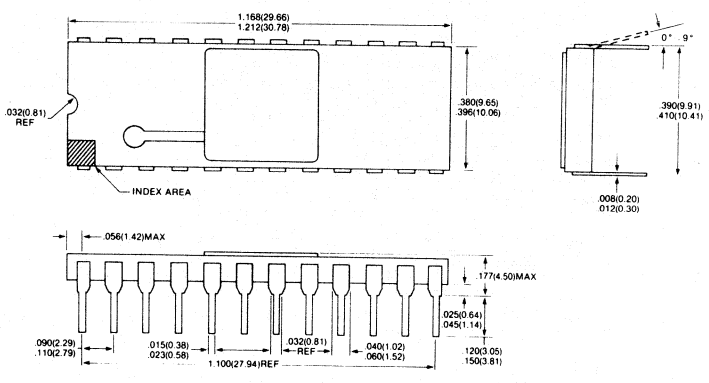

ML449

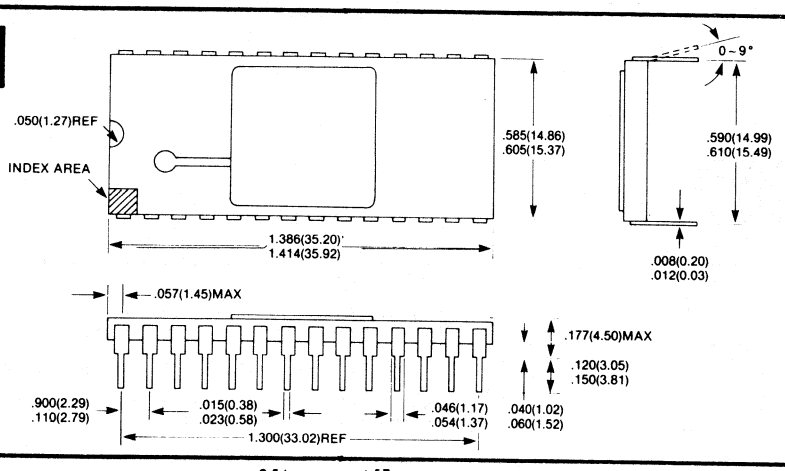

ML450

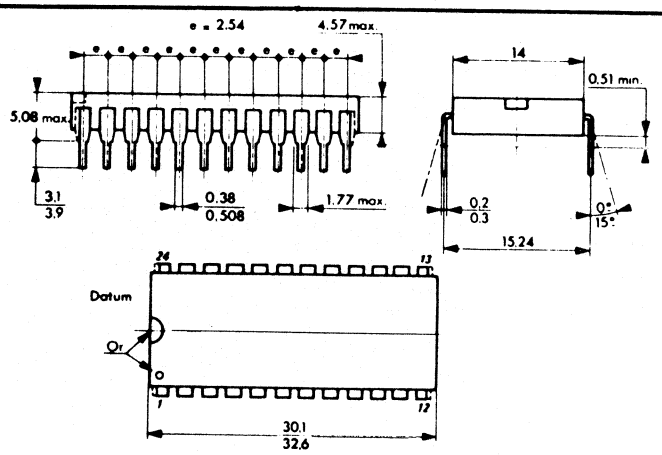

MO001

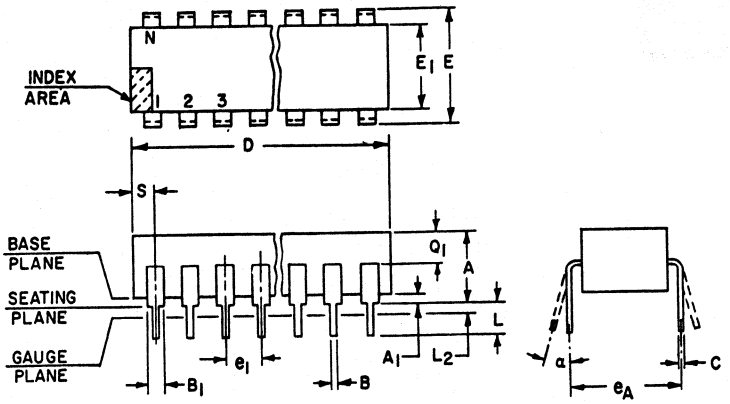

NOTES:

1. Refer to applicable symbol list.
2. Dimensioning and tolerancing per ANSI Y14.5-1973.
3. Leads within .005 radius of True Position (TP) at gauge plane with maximum material condition and unit installed.
4. e_1 and e_A applies in zone L_2 when unit installed.
5. α applies to spread leads prior to installation.
6. N is the maximum quantity of lead positions.
7. N_1 is the allowable quantity of missing leads.
8. E_1 does not include mold flash.
9. Outlines on which the seating plane is coincident with the base plane (A_1 = 0) terminal lead standoffs are not required, and B_1 may equal B along any part of the lead above the seating/base plane.
10. Controlling Dimension: INCH

	A	A1	B	B1	C	D	E	E1	e1	eA	L	L2	α	N	N1	Q1	S	NOTES
MO001AA	.200 MAX	.020 MIN	.015 .023	.030 .070	.008 .015	.660 .785	.325 MAX	.220 .290	.100 T.P.	.300 T.P.	.100 MIN	.000 .030	0° 15°	14	0			1,2,10
NOTES								8	3,4	3,4				5	6	7		
MO001AB	.155 .200	.020 .050	.014 .020	.050 .065	.008 .012	.745 .770	.300 .325	.240 .260	.100 T.P.	.300 T.P.	.125 .150	.000 .030	0° 15°	14	0	.040 .075	.065 .090	1,2,10
NOTES								8	3,4	3,4				5	6	7		
MO001AC	.155 .200	.020 .050	.014 .020	.035 .065	.008 .012	.745 .785	.300 .325	.240 .260	.100 T.P.	.300 T.P.	.125 .150	.000 .030	0° 15°	16	0	.040 .075	.015 .060	1,2,10
NOTES								8	3,4	3,4				5	6	7		
MO001AD	.120 .160	.020 .065	.014 .020	.050 .065	.008 .012	.745 .770	.300 .325	.240 .260	.100 T.P.	.300 T.P.	.125 .150	.000 .030	0° 15°	14	0	.050 .085	.065 .090	1,2,10
NOTES								8	3,4	3,4				5	6	7		
MO001AE	.120 .160	.020 .065	.014 .020	.035 .065	.008 .012	.745 .785	.300 .325	.240 .260	.100 T.P.	.300 T.P.	.125 .150	.000 .030	0° 15°	16	0	.050 .085	.015 .060	1,2,10
NOTES								8	3,4	3,4				5	6	7		
MO001AF	.165 .210	.015 .045	.015 .020	.045 .070	.009 .011	.750 .795	.295 .325	.245 .300	.100 T.P.	.300 T.P.	.120 .160	.000 .030	2° 15°	14	0	.050 .080	.050 .110	1,2,10
NOTES								8	3,4	3,4				5	6	7		
MO001AG	.165 .210	.015 .045	.015 .020	.045 .070	.009 .011	.750 .795	.295 .325	.245 .300	.100 T.P.	.300 T.P.	.120 .160	.000 .030	2° 15°	16	0	.050 .080	.010 .060	1,2,10
NOTES								8	3,4	3,4				5	6	7		
MO001AH	.140 .180	.015 .040	.014 .020	.044 .070	.008 .012	.730 .770	.290 .320	.240 .260	.100 T.P.	.300 T.P.	.115 .155	.000 .030	0° 15°	14	0	.050 .085	.055 .095	1,2,10
NOTES								8	3,4	3,4				5	6	7		
MO001AJ	.090 .140	.020 .070	.015 .023	.035 .055	.008 .012	.685 .760	.300 .325	.240 .285	.100 T.P.	.300 T.P.	.100 .150	.000 .030	0° 15°	14	0	.060 .080	.045 .090	1,2,10
NOTES								8	3,4	3,4				5	6	7		
MO001AK	.090 .140	.020 .070	.015 .023	.035 .055	.008 .012	.800 .840	.300 .325	.240 .285	.100 T.P.	.300 T.P.	.100 .150	.000 .030	0° 15°	16	0	.060 .080	.040 .080	1,2,10
NOTES								8	3,4	3,4				5	6	7		
MO001AL	.160 .200	.020 .045	.015 .020	.044 .070	.008 .012	.815 .890	.290 .350	.240 .260	.100 T.P.	.300 T.P.	.120 .150	.000 .030	0° 15°	16	0	.050 .085	.052 .095	1,2,10
NOTES								8	3,4	3,4				5	6	7		

MO004

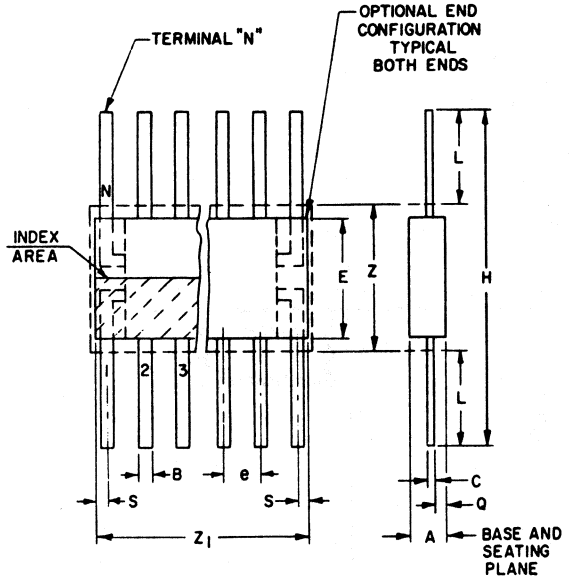

NOTES:

1. Refer to Rules for Dimensioning Peripheral Lead Outlines.
2. Leads within .005 radius of True Position (TP) at maximum material condition.
3. N is the maximum quantity of lead positions.
4. Z and Z_1 determine a zone within which all body and lead irregularities lie.
5. Controlling Dimensions: INCH

	A	B	C	e	E	H	L	N	Q	S	Z	Z1	NOTES
MO004AA	.008 .100	.015 .019	.003 .006	.050 TP	.200 .300	.600 1.000	.150 .350	14	.005 .050	.000 .025	.300	.350	1,2,6
NOTES								4			5	5	
MO004AB	.008 .100	.013 .017	.003 .006	.050 TP	.200 .300	.600 1.000	.150 .350	14	.005 .050	.000 .025	.300	.350	1,2,6
NOTES								4			5	5	
MO004AC	.008 .100	.015 .019	.003 .006	.050 TP	.200 .300	.600 1.000	.150 .350	14	.000 .097	.000 .025	.300	.350	1,2,6
NOTES								4			5	5	
MO004AD	.008 .100	.015 .019	.003 .006	.050 TP	.200 .300	.600 1.000	.150 .350	10	.005 .050	.000 .050	.300	.300	1,2,6
NOTES								4			5	5	
MO004AE	.008 .100	.015 .019	.003 .006	.050 TP	.200 .300	.600 1.000	.150 .350	10	.005 .050	.000 .025	.300	.250	1,2,6
NOTES								4			5	5	
MO004AF	.008 .100	.015 .019	.003 .006	.050 TP	.200 .300	.600 1.000	.150 .350	14	.005 .050	.000 .050	.300	.400	1,2,6
NOTES								4			5	5	
MO004AG	.008 .100	.015 .019	.003 .006	.050 TP	.200 .300	.600 1.000	.150 .350	14	.005 .050	.000 .025	.300	.400	1,2,6
NOTES								4			5	5	
MO004AH	.008 .100	.015 .019	.003 .006	.050 TP	.200 .300	.600 1.000	.150 .350	16	.005 .050	.000 .050	.300	.450	1,2,6
NOTES								4			5	5	

MO006

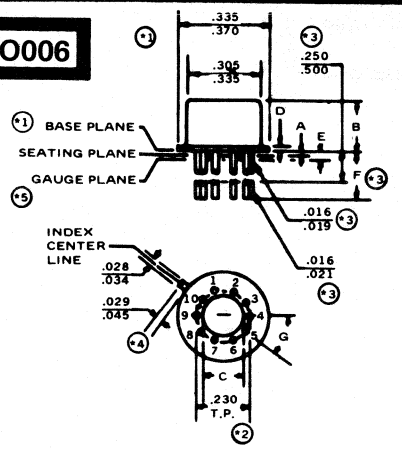

NOTES:

1. Refer to Rules for Dimensioning Axial Lead Product Outlines.
2. Leads at gauge plane within .007" radius of True Positions (TP) with maximum material condition.
3. Dim. .016" Min. and .019" Max. applies between .000" Min. and .050 Max. and .250" Min. and .500" Max. Dim. .016" Min. and .021" Max. applies between .250" Min. and .500" Max. and .500 " from seating plane. Diameter is uncontrolled in .000" Min. and .050" Max. and .500".
4. Measured from Max. .370".
5. One (1) allowable missing lead.

	A	B	C	D	E	F	G	NO. OF LEADS
MO006AA	.010 .040	.240 .260	.140 .160	.040 MAX	.050 MAX	.500 MIN	36° TP	10
MO006AB	0 0	.240 .260	0 0	.040 MAX	.050 MAX	.500 MIN	36° TP	10
MO006AC	0 0	.140 .160	0 0	.040 MAX	.050 MAX	.500 MIN	36° TP	10
MO006AD	.010 .140	.165 .185	.140 .160	.040 MAX	.050 MAX	.500 MIN	36° TP	10
MO006AE	.010 .040	.165 .185	.140 .160	.040 MAX	.050 MAX	.500 MIN	30° TP	12
MO006AF	0 0	.165 .185	0 0	.020 .040	.000 .050	.500 .562	36° TP	10
MO006AG	0 0	.165 .185	0 0	.020 .040	.000 .050	.500 .562	30° TP	12

MO015

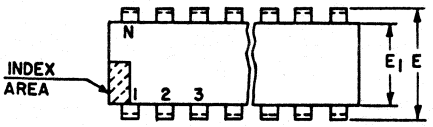

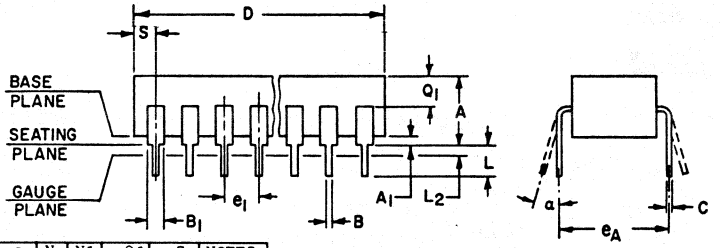

	A	A1	B	B1	C	D	E	E1	e1	eA	L	L2	a	N	N1	Q1	S	NOTES
MO015AA	.120 .250	.020 .070	.016 .020	.028 .070	.008 .012	1.200 1.290	.600 .625	.515 .580	.100 TP	.600 TP	.100 .200	.000 .030	0° 15°	24	0	.040 .075	.040 .100	1,2,10
NOTES								8	3,4	3,4			5	6	7			
MO015AB	.120 .250	.020 .070	.016 .020	.028 .070	.008 .012	.700 .840	.600 .625	.515 .580	.100 TP	.600 TP	.100 .200	.000 .030	0° 15°	16	0	.040 .075	.040 .100	1,2,10
NOTES								8	3,4	3,4			5	6	7			
MO015AC	.120 .250	.020 .070	.016 .020	.028 .070	.008 .012	1.800 1.890	.600 .625	.515 .580	.100 TP	.600 TP	.100 .200	.000 .030	0° 15°	36	0	.065 .105	.040 .100	1,2,10
NOTES								8	3,4	3,4			5	6	7			
MO015AD	.100 .200	.000 .070	.015 .020	.015 .055	.008 .012	1.170 1.210	.600 .625	.515 .580	.100 TP	.600 TP	.100 .200	.000 .030	0° 15°	24	0	.020 .080	.025 .050	1,2,10
NOTES	9							8	3,4	3,4			5	6	7			
MO015AE	.100 .200	.000 .070	.015 .020	.015 .055	.008 .012	.770 .810	.600 .625	.515 .580	.100 TP	.600 TP	.100 .200	.000 .030	0° 15°	16	0	.020 .080	.025 .050	1,2,10
NOTES	9							8	3,4	3,4			5	6	7			
MO015AF	.100 .200	.000 .070	.015 .020	.015 .055	.008 .012	1.770 1.810	.600 .625	.515 .580	.100 TP	.600 TP	.100 .200	.000 .030	0° 15°	36	0	.020 .080	.025 .050	1,2,10
NOTES	9							8	3,4	3,4			5	6	7			
MO015AG	.090 .200	.020 .070	.014 .020	.050 .054	.008 .012	1.220 1.290	.600 .625	.520 .550	.100 TP	.600 TP	.125 .150	.000 .030	0° 15°	24	0	.020 .060	.050 .100	1,2,10
NOTES								8	3,4	3,4			5	6	7			
MO015AH	.090 .200	.000 .070	.015 .020	.015 .055	.008 .012	1.380 1.420	.600 .625	.485 .515	.100 TP	.600 TP	.100 .200	.000 .030	0° 15°	28	0	.020 .070	.040 .070	1,2,10
NOTES	9							8	3,4	3,4			5	6	7			
MO015AJ	.100 .200	.000 .070	.015 .020	.015 .055	.008 .012	1.980 2.020	.600 .625	.485 .515	.100 TP	.600 TP	.100 .200	.000 .030	0° 15°	40	0	.020 .070	.040 .070	1,2,10
NOTES	9							8	3,4	3,4			5	6	7			
MO015AK	.145 .175	.030 .050	.015 .020	.040 .050	.008 .015	1.240 1.260	.600 .625	.540 .560	.100 TP	.600 TP	.100 .140	.000 .030	0° 15°	24	0	.045 .075	.065 .085	1,2,10
NOTES								8	3,4	3,4			5	6	7			
MO015AL	.090 .140	.020 .065	.015 .020	.045 .055	.008 .012	1.350 1.430	.600 .625	.480 .520	.100 TP	.600 TP	.100 .180	.000 .030	0° 15°	28	0	.020 .080	.020 .060	1,2,10
NOTES								8	3,4	3,4			5	6	7			
MO015AM	.090 .140	.020 .065	.015 .020	.045 .055	.008 .012	1.950 2.020	.600 .625	.480 .520	.100 TP	.600 TP	.100 .180	.000 .030	0° 15°	40	0	.020 .080	.020 .060	1,2,10
NOTES								8	3,4	3,4			5	6	7			
MO015AN	.090 .150	.020 .065	.015 .020	.045 .055	.008 .012	1.150 1.220	.600 .625	.480 .520	.100 TP	.600 TP	.100 .180	.000 .030	0° 15°	24	0	.020 .080	.020 .060	1,2,10
NOTES								8	3,4	3,4			5	6	7			

NOTES:

1. Refer to applicable symbol list.
2. Dimensioning and tolerancing per ANSI Y14.5-1973.
3. Leads within .127 radius of True Position (TP) at gauge plane with maximum material condition and unit installed.
4. e_1 and e_A applies in zone L_2 when unit installed.
5. α applies to spread leads prior to installation.
6. N is the maximum quantity of lead positions.
7. N_1 is the allowable quantity of missing leads.
8. E_1 does not include mold flash.
9. Outlines on which the seating plane is coincident with the base plane (A_1 = 0) terminal lead stand-offs are not required, and B_1 may equal B along any part of the lead above the seating/base plane.
10. Controlling Dimension: INCH

MO019

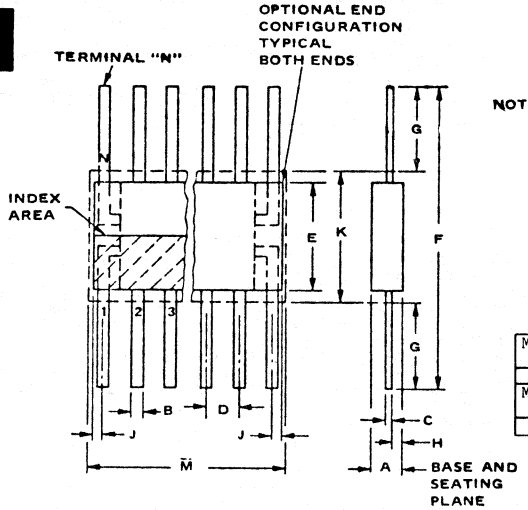

NOTES:
1. REFER TO APPLICABLE SYMBOL LIST.
2. DIMESIONING AND TOLERANCING PER ANSI Y14.5-1973.
3. LEADS WITHIN .005 RADIUS OF TRUE POSITION (TP) AT MAXIMUM MATERIAL CONDITION.
4. N IS THE MAXIMUM QUANTITY OF LEAD POSITIONS.
5. K AND M DETERMINE A ZONE WITHIN WHICH ALL BODY AND LEAD IRREGULARITIES LIE.
6. CONTROLLING DIMENSIONS: INCH.

	A	B	C	D	E	F	G	H	J	K	M	N	NOTES
MO019AA	.008 .120	.015 .019	.003 .006	.050 TP	.300 .400	.700 1.200	.150 .400	.005 .050	.000 .050	.400	.650	24	1,2,6
NOTES				3						5	5	4	
MO019AB	.008 .120	.018 .022	.003 .006	.050 TP	.300 .400	.700 1.200	.150 .400	.005 .050	.000 .075	.400	.800	28	1,2,6
NOTES				3						5	5	4	

23. OUTLINE DRAWINGS

IN DRAWING NUMBER SEQUENCE

PL10

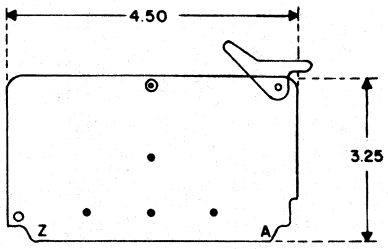

0625" THICK

TO8

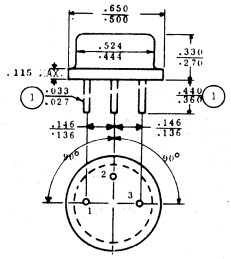

TO8 Note: 1. Three Leads

TO78

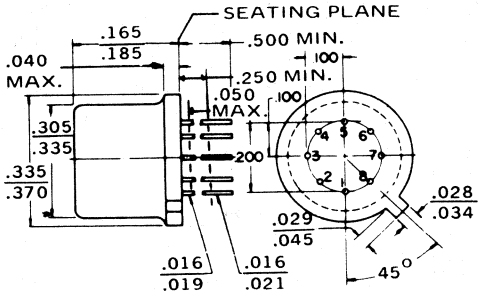

NOTES:

1. (EIGHT LEADS). Maximum number of leads omitted in this outline, "three" (3). the number and position of leads actually present are indicated in the product registration. Outline designation determined by the location and minimum angular spacing of any two adjacent leads.
2. (ALL LEADS) Dim. .016 Min and .019 Max. applies between Dim. .050 Max. and .250 Min. Dim. .016 Min and .021 Max. applies between .500" (12.70 MM) from seating plane. Diameter is uncontrolled in .050 Max. and beyond .500" (12.70 MM) from seating plane.
3. Measured from maximum diameter of the product.
4. Leads having maximum diameter .019" (.483 MM) measured in gaging plane .054" (1.37 MM) + .001" (.025 MM) - .000" (.000 MM) below the seating plane of the product shall be within .007" (.178 MM) of their true position relative to a maximum width tab.
5. The product may be measured by direct methods or by gage.
6. Tab Centerline.

TO84

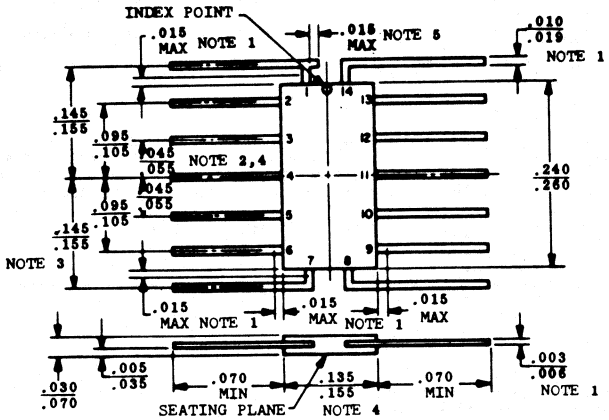

NOTES:

1. Lead dimensions uncontrolled in this zone to allow for body and lead finish irregularities.
2. Leads missing from their designated positions shall also be counted when numbering leads for specific applications.
3. Spacing and Angle of the end leads at the point of emergence of body is not controlled.
4. Lead spacing shall be measured within .030 (.762 mm) from the point of emergence from the body or, as in the case of end lead, from the point where the extension of the body outline intersects the end leads.
5. Mechanical Index, Optional.

TO86

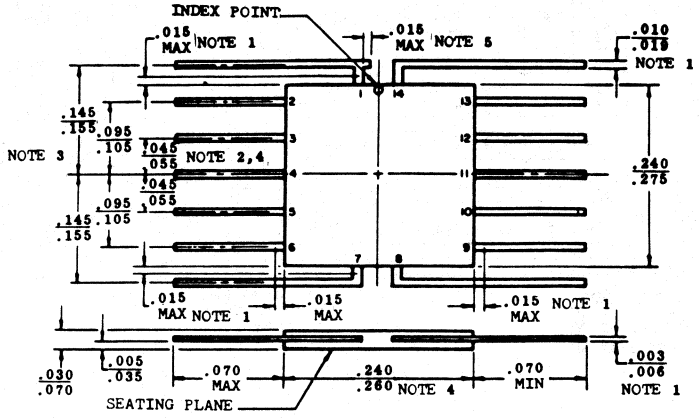

NOTES:

1. Lead dimensions uncontrolled in this zone to allow for body and lead finish irregularities.
2. Leads missing from their designated positions shall also be counted when numbering leads for specific applications.
3. Spacing and Angle of the end leads at the point of emergence of body is not controlled.
4. Lead spacing shall be measured within .030 (.762 mm) from the point of emergence from the body or, as in the case of end lead, from the point where the extension of the body outline intersects the end leads.
5. Mechanical Index, Optional.

TO99

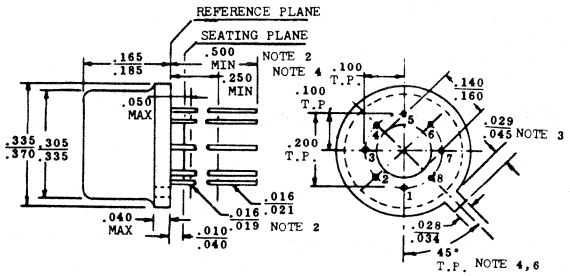

NOTES:

1. (Eight Leads). Maximum number of leads omitted in this outline, "one" (1). The number and position of leads actually present are indicated in the product registration. Outline designation determined by the location and minimum angular spacing of any two adjacent leads.
2. (All Leads) Dim. .016 Min and .019 Max applies between .050 Max and .250 Min. Dim. .016 Min and .021 Max applies between .250 Min and .500" (12.70 MM) from seating plane. Diameter is uncontrolled in Dim .050 Max and beyond .500 (12.70 MM) from seating plane.
3. Measured from maximum diameter of the product.
4. Leads having maximum diameter .019" (.483 MM) measured in gaging plane .054 (1.37 MM) + .001" (.025 MM) - .000" (.000 MM) below the seating plane of the product shall be within .007" (.178 MM) of their true position relative to a maximum width tab.
5. The product may be measured by direct methods or by gage.
6. Tab Centerline.

TO100

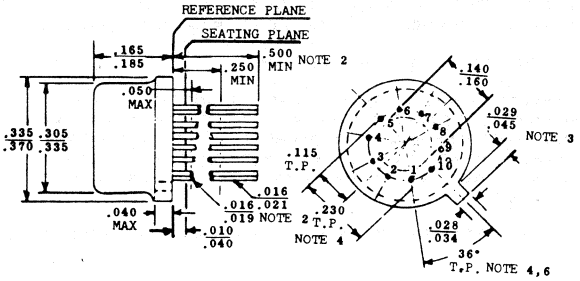

NOTES:

1. (Ten Leads). Maximum number of leads omitted in this outline, "one" (1). The number and position of leads actually present are indicated in the product registration. Outline designation determined by the location and minimum angular spacing of any two adjacent leads.
2. (All Leads) Dim. .016 Min and .019 Max applies between .050 Max and .250 Min. Dim. .016 Min and .021 Max applies between .250 Min and .500" (12.70 MM) from seating plane. Diameter is uncontrolled in Dim .050 Max and beyond .500" (12.70 MM) from seating plane.
3. Measured from maximum diameter of the product.
4. Leads having maximum diameter .019" (.483 MM) measured in gaging plane .054 (1.37 MM) + .001" (.025 MM) - .000" (.000 MM) below the seating plane of the product shall be within .007" (.178 MM) of their true position relative to a maximum width tab.
5. The product may be measured by direct methods or by gage.
6. Tab Centerline.

TO101

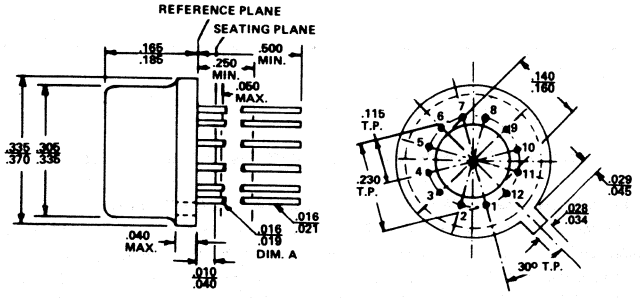

NOTES:

1. (TWELVE LEADS). MAXIMUM NUMBER OF LEADS OMITTED IN THIS OUTLINE, "ONE" (1). THE NUMBER AND POSITION OF LEADS ACTUALLY PRESENT ARE INDICATED IN THE PRODUCT REGISTRATION. OUTLINE DESIGNATION DETERMINED BY THE LOCATION AND MINIMUM ANGULAR SPACING OF ANY TWO ADJACENT LEADS.
2. (ALL LEADS). DIM. A APPLIES BETWEEN .060 MAX. AND .250 MIN. DIM. B APPLIES BETWEEN .250 MIN. AND .500" (12.70 MM) FROM REFERENCE PLANE. DIAMETER IS UNCONTROLLED IN .060 MAX. AND BEYOND .500" (12.70 MM) FROM REFERENCE PLANE.
3. MEASURED FROM MAXIMUM DIAMETER OF THE PRODUCT.
4. LEADS HAVING MAXIMUM DIAMETER .019" (.483 MM) MEASURED IN GAUGING PLANE .054" (1.37 MM) + .001" (.025 MM) – .000" (.000 MM) BELOW THE REFERENCE PLANE OF THE PRODUCT SHALL BE WITHIN .007" (.178 MM) OF THEIR TRUE POSITION RELATIVE TO A MAXIMUM WIDTH TAB.
5. THE PRODUCT MAY BE MEASURED BY DIRECT METHODS OR BY GAUGE.
6. TAB CENTERLINE.

TO116

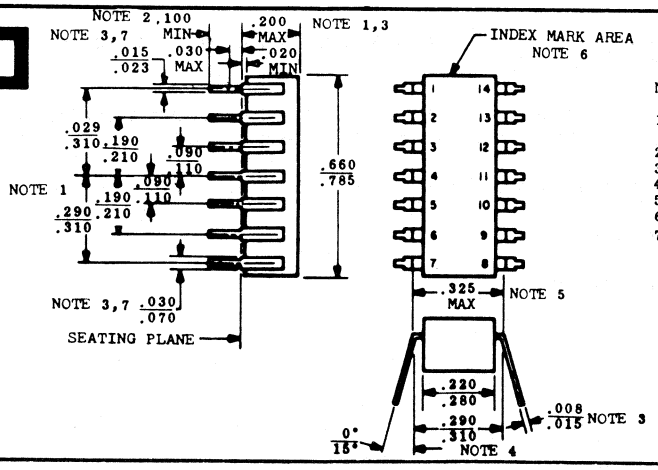

NOTES:

1. Leads missing from their designated positions shall be counted when numbering leads for special applications.
2. Lead spacing shall be measured within this zone.
3. Typical all leads.
4. Installed position of lead centers.
5. Overall installed width.
6. Index to be visible from top, this end only.
7. Lead transition geometry from Dia .015 min to .023 max to Dia .030 min to .070 max optional on body side of seating plane.

JEDEC GAUGE DESIGNATIONS

The Gauge Designations below are referenced in the JEDEC TO Outline Drawings

GS1

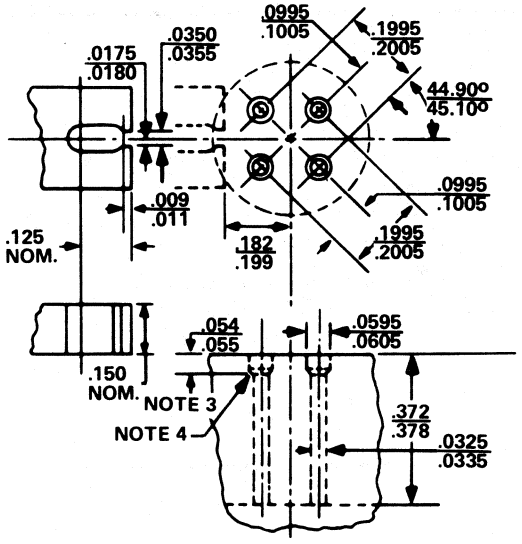

NOTES:

1. THE LOCATION OF THE TAB LOCATOR WITHIN THE LIMITS INDICATED WILL BE DETERMINED BY THE TAB AND FLANGE DIMENSIONS OF THE DEVICE BEING CHECKED.
2. THE FOLLOWING GAUGING PROCEDURE SHALL BE USED:

   THE DEVICE BEING MEASURED SHALL BE INSERTED UNTIL ITS SEATING PLANE IS .125" (3.18 MM) ± .010" (.254MM) FROM THE SEATING SURFACE OF THE GAUGE. A FORCE OF 8 ± .5 OZ. SHALL THEN BE APPLIED PARALLEL AND SYMMETRICAL TO THE DEVICE'S CYLINDRICAL AXIS. WHEN EXAMINED VISUALLY AFTER THE FORCE APPLICATION (THE FORCE NEED NOT BE REMOVED) THE SEATING PLANE OF THE DEVICE SHALL BE SEATED AGAINST THE GAUGE.

   THE USE OF A PIN STRAIGHTENER PRIOR TO INSERTION IN THE GAUGE IS PERMISSIBLE.
3. GAUGING PLANE.
4. DRILL ANGLE.

GS2

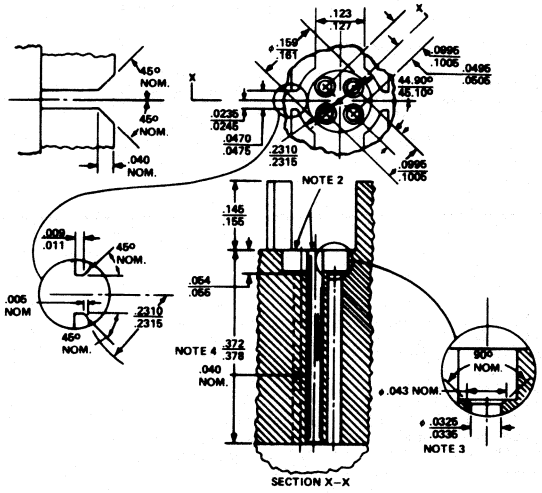

NOTE 1: THE FOLLOWING GAUGING PROCEDURE SHALL BE USED:

THE DEVICE BEING MEASURED SHALL BE INSERTED UNTIL ITS SEATING PLANE IS 0.125" ± .010" FROM THE SEATING SURFACE OF THE GAUGE. A FORCE OF 8 ± 0.5 OZ. SHALL THEN BE APPLIED PARALLEL AND SYMMETRICAL TO THE DEVICE'S CYLINDRICAL AXIS. WHEN EXAMINED VISUALLY AFTER THE FORCE APPLICATION (THE FORCE NEED NOT BE REMOVED) THE SEATING PLANE OF THE DEVICE SHALL BE SEATED AGAINST THE GAUGE.

THE USE OF A PIN STRAIGHTENER PRIOR TO INSERTION IN THE GAUGE IS PERMISSIBLE.

A SPACER MAY BE USED TO OBTAIN THE 0.125" DISTANCE FROM THE GAUGE SEAT PRIOR TO FORCE APPLICATION.

NOTE 2: THESE SURFACES TO BE PARALLEL AND IN SAME PLANE WITHIN ± .001"

NOTE 3: FOUR HOLES.

NOTE 4: PRESSED IN.

REGISTRY CONTROL NUMBERS APPLICABLE TO SECTION 24. PIN CONNECTION CHARTS

Registery Control #'s

① – Can Type Only.
② – Also Available in Can Type by some Mfgrs. See Type #Outline Dr.
③ – Flat Pack.
④ – Also Available in Flat Pack by some Mfgrs. See Type #Outline Dr.
⑤ – Pin 13 is also the programming pin.
⑥ – Pin 15 is also the programming pin.
⑦ – CS1/CS1/NC Programable CS.
⑧ – CS2/CS2/NC Programable CS.
⑨ – CS3/CS3/NC.
⑩ – Connect Substrate Externally to Ground.
⑪ – PIN 18, 20, 21 has optional CS & NC.
⑫ – PIN 20 is also programming pin.
⑬ – PIN 20, 21 has optional CS & NC.
⑭ – PIN 20 has optional CS & NC.
⑮ – PIN 1-6 & 7-11 & 23 all common.
⑯ – PIN 1-11 all common.
⑰ – PIN 18 & 20 has optional CS & NC.
⑱ – PIN 22 - Norm. Open; Conn to VCC During Prog.
⑲ – Type #MD4430 has RST input gated w/clk input for Sync RST
⑳ – AR Tied to VIL if 0-Suffix, VIH if 1-Suffix
㉑ – Option: Either S or Non-Clocked Chip Enable/Power Down (E)
㉓ — **PINS 20, 22, 26, 27 — Mask Prog Option**

PN8

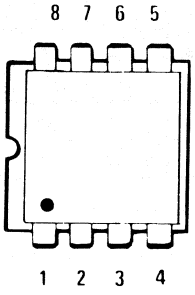

Pin	a①	b①	c	d②	e②	f①	g①	h①	i	j	k	m	n	o
1	DIO	DinA	VCC	01	NC	InA	NC	In1	NC	02	OUT	RCIRC	OUT	Ø2
2	VM	DoutA	DinA	In1	In	OUTA	In	OUT1	OUT	I2	Ø2	In1	VGG	OUT
3	VSS	CLk	DoutA	Ø1	Ø1	OIN	Ø1	Ø	ØIn	Ø2	NC	OUT1	S	R
4	VGG	VCC	CLk	VCC	VCC	VSS	VSS	VSS	VSS	VDD	VDD	VGG	VDD	VDD
5	CLk	VGG	VGG	02	OUT	Oout	OUT	VGG	Oout	01	In	Oin	I0	W
6	C1	DoutB	DoutB	In2	NC	OUTB	NT.RES	OUT2	In	I1	O1	OUT2	CP	In
7	C2	DinB	DinB	Ø2	Ø2	InB	Ø2	In2	In	Ø1	NC	In2	I1	Ø1
8	C3	VGI	VGI	VDD	VDD	VGG	VDD	VDD	VGG	VCC	VCC	VCC	VCC	VCC

Pin	p	q	r②	s	t	u	v	w						
1	RC	RC	S	Ø1	CLkIn	OUT2	VP	RCIRC						
2	InA	In	InO	LC	OUT	In2	VDD	In						
3	OUTA	OUT	OUTO	VSS	RE	Ø2	Ø	OUT						
4	VGG	VSS	GND	OUT	VDD	VDD	C1	VSS						
5	CP	CP	Ø	Ø2	WR	OUT1	C2	Øin						
6	OUTB	VGG	OUT1	VGG	IN	In1	C3	VGG						
7	InB		In1	In	CLkO	Ø1	VSS	NC						
8	VCC	VDD	VCC	VDD	VCC	VCC	I/O	VDD						

24. PIN CONNECTIONS

IN PIN NUMBER SEQUENCE

PN10

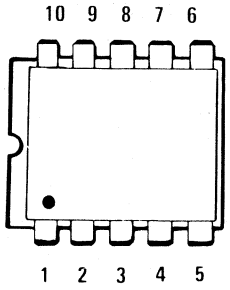

Pin	a①	b	c	d	e	f①	g②	h						
1	InA	Øout	In2	ADD1	InA	InA	InA	NC						
2	ØinA	In1	OUT2	In	OUTA	LCA	OUTA	08						
3	ØoutA	OUT1	LGTHSEL	OUT	InB	OUTA	InB	I8						
4	OUTA	In2	OUT1	ADD2	OUTB	Øin	OUTB	04						
5	VSS	VSS	VSS	VSS	VSS	VSS	VSS	VDD						
6	ØoutB	OUT2	In1B	Øin	CP	Øout	Oin	NC						
7	OUTB	In3	In1A	Øout	VGG	OUTB	VGG	I4						
8	$\overline{Ø}$inB	OUT3	Øout	CS		LCB	NC	Ø1						
9	InB	Oin	Øin	WRC	VDD	InB	VDD	Ø2						
10	VGG	VGG	VGG	VGG	RC	VGG	RCIRC	GND						

Registery Control #'s ① — Can Type Only. ② — Also Available in Can Type by some Mfgrs. See Type #Outline Dr.

PN12

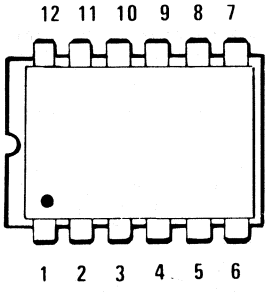

Pin	a													
1	$\overline{Ø1}$													
2	$\overline{Ø2}$													
3	C1													
4	I1													
5	O1(60)													
6	O1(64)													
7	VDD													
8	C2													
9	I2													
10	O2(60)													
11	O2(64)													
12	GND													

PN14

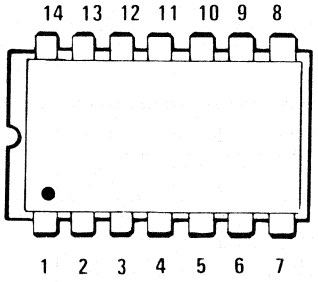

Pin	a	b	c	d	e	f	g	h	i	j	k	m	n	o
1	X0	Y1	X3	R1	S1	A	DoutB	NC	VCC	VCC	DP1	SI	SA	Q6
2	X1	Y2	X2	R2	IA	B	DinB	NC	DoutB	NC	NC	InB	SB	Q7
3	X2	Y3	X1	R3	IB	QA	VGI	DinA	DinB	DinB	Clk	InC	Q1	Q8
4	X3	VCC	US	R4	IC	QB	NC	DoutA	VGI	VGI	DP5	VCC	Q2	VCC
5	W1	X0	Y1	GND	ID	QC	DinA	Clk	DinA	DinA	DP10	InD	Q3	SA
6	$\overline{S1}$	X1	Y2	01	BA	QD	NC	VCC	DoutA	DoutA	DP14	MCON	Q4	SB
7	GND	X2	Y3	D1	GND	GND	DoutA	NC	Clk	NC	VSS	Clk1	GND	Q1
8	$\overline{S0}$	X3	Y4	W4	TSL	Clk	Clk	NC	NC	NC	Q17	Clk2	Clk	Q2
9	W0	W0	WL	W3	TSR	CLR	NC	NC	NC	NC	Q18	OUTD	CLR	Q3
10	Y3	GND	OS	W2	Q4	QE	NC	VGG	NC	Clk	Q13	OUTC	Q5	Q4
11	Y2	$\overline{S0}$	QL	W1	Q3	QF	VCC	DoutB	NC	VGG	Q8	GND	Q6	GND
12	Y1	$\overline{S1}$	QH	VCC	Q2	QG	VGG	DinB	VGG	DinB	Q9	OUTB	Q7	Clk
13	Y0	W1	WH	D2	Q1	QH	NC	VGI	NC	NC	Q4	OUTA	Q8	CLR
14	VCC	Y0	X4	O2	VSS	VCC	NC	NC	NC	NC	VDD	InA	VCC	Q5

Pin	p	q	r	s	t	u	v	w	x	y	z	aa	ab	ac
1	Clk1	Clk	A	$\overline{\emptyset 12}$	$\overline{\emptyset 12}$	O1	VCC	NC	SI	SI	DS	Q63C	A	DA
2	In1	PO5	B	NC	NC	O2	Dout2	NC	InA	InB	P0	Q63D	B	NC
3	NC	PO6	Q0	I2	I2	O3	Dout1	NC	InB	InC	P1	$\overline{CPD}$	QA	$\overline{CP}$
4	NC	PO7	Q1	O2(44)	O2	O4	VGI	NC	InC	VCC	P2	DD	QB	DC
5	$\overline{Clk1}$	PO8	Q2	O2(48)	NC	O5	NC	VCC	InD	InD	P3	$\overline{CPC}$	QC	DB
6	OUT1	NC	Q3	NC	NC	O6	Din1	NC	MCON	MCON	S	DC	QD	DD
7	VDD	VDD	GND	GND	GND	GND	CLk	NC	GND	Clk1	GND	VSS	GND	VSS
8	OUT2	R	CP	$\overline{\emptyset 11}$	$\overline{\emptyset 11}$	I6	Din2	NC	CLk2	CLk2	$\overline{CP2}$	Q63B	CLk	O3D
9	$\overline{Clk2}$	SI	MR	$\overline{\emptyset 2}$	$\overline{\emptyset 2}$	I5	Din3	CLk	CLk1	OUTQD	$\overline{CP1}$	DA	CIR	O4D
10	NC	PO1	Q4	NC	NC	I4	NC	GND	OUTQD	OUTQC	Q3	$\overline{CPA}$	QE	O3B
11	NC	PO2	Q5	I1	I1	I3	Din4	InB	OUTQC	GND	Q2	Q63A	QF	O3C
12	In2	PO3	Q6	O1(44)	OI	I2	VGG	InA	OUTQB	OUTQB	Q1	DB	QG	O4C
13	CLk2	PO4	Q7	O1(48)	NC	I1	Dout4	QH	OUTQA	OUTQA	Q0	$\overline{CPB}$	QH	O3A
14	GND	GND	VCC	VDD	VDD	VDD	Dout3	$\overline{QH}$	VCC	InA	VCC	VDD	VCC	VDD

PN14(Cont.)

PN14

PN14(Cont.)

Pin	ad	ae	af	ag										
1	DA	R/A−	D1	A0										
2	NC	GEN−	NC	A1										
3	$\overline{CP}$	GEN+	Clk	A2										
4	DB	XFer−	D2	A3										
5	DC	CY1	D3	Strobe										
6	DD	CY2	D4	CEI										
7	VSS	CX2	VSS	VSS										
8	Q3D	CX1	D4+4	CE2										
9	Q4D	XFer+	D4+5	R/W										
10	Q3C	R/A+	D3+4	DO										
11	Q3B	DET1−	D2+4	A4										
12	Q4B	DET2−	D2+5	A5										
13	Q3A	DET2+	D1+4	DI										
14	VDD	DET1+	VDD	VDD										

PN16

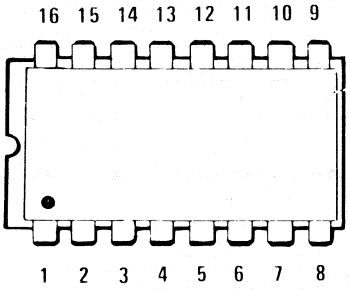

Pin	a	b	c	d	e	f	g	h	i	j	k	m	n	o
1	A9	VDD	A1	ADD0	A6	A	A1	CS	A3	VBB	VBB	A6	$\overline{CS}$	Q1
2	$\overline{C3}$	$\overline{\phi 1}$	A0	$\overline{CE}$	A8	ME	A0	A0	A2	Din	Din	A5	A0	Q0
3	W	A3	$\overline{E1}$	$\overline{WE}$	A7	WE	CS1	A1	A1	$\overline{W}$	$\overline{W}$	R/W	A1	$\overline{CE}$
4	D1	A2	$\overline{E2}$	Din1	VGG	D1	CS2	A2	A0	$\overline{RAS}$	$\overline{RAS}$	A1	A2	D1
5	$\overline{O1}$	A1	$\overline{E3}$	OUT1	VSS	S1	CS3	A3	A5	A0	A0	A2	A3	D0
6	D2	A0	DO	Din2	A5	D2	D0	A4	A6	A2	A2	A3	A4	A3
7	$\overline{O2}$	$\overline{\phi 2}$	A4	OUT2	AV	S2	A4	Dout	A7	A1	A1	A4	Dout	A2
8	GND	VSS	GND	GND	VCC	GND	GND	VSS	VSS	VDD	VDD	A0	GND	VEE
9	$\overline{O3}$	A6	A5	OUT3	A3	S3	A5	A5	DI/01	VCC	VCC	GND	A5	A1
10	D3	A7	A6	Din3	A2	D3	A6	A6	DI/02	A5	A5	VCC	A6	A0
11	$\overline{O4}$	A5	A7	OUT4	A4	S4	A7	A7	DI/03	A4	A4	Din	A7	D2
12	D4		$\overline{WE}$	Din4	DI	D4	WE	A8	DI/04	A3	A3	Dout	A8	D3
13	A3	A8	DI	ADD3	DO	D	DI	A9	$\overline{CE}$	$\overline{CS}$	A6	$\overline{CE}$	A9	$\overline{WE}$
14	A2	WE	A3	ADD2	VDD	C	A3	R/W	$\overline{WE}$	Dout	Dout	A9	$\overline{WE}$	Q3
15	A1	$\overline{CS}$	A2	ADD1	R/W	B	A2	Din	A4	CAS	$\overline{CAS}$	A8	Din	Q2
16	VCC	I/O	VCC	VCC	CS	VCC	VCC	VDD	VCC	VSS	VSS	A7	VCC	VCC

PN16

PN16(Cont.)

Pin	p	q	r	s	t	u	v	w	x	y	z	aa	ab	ac
1	A	D2	A6	A0	A0	VCC1	A1	A6	A6	A1	ADDinA	ADDinA	A0	VBB
2	B	D3	A5	$\overline{CS}$	$\overline{CS}$	A2	A2	A5	A5	A0	$\overline{ME}$	ADDinB	$\overline{ME}$	Din
3	$\overline{CE1}$	$\overline{D4}$	R/$\overline{W}$	$\overline{WE}$	$\overline{W}$	A1	Din	$\overline{WE}$	$\overline{WE}$	CE1	$\overline{WE}$	$\overline{CE1}$	$\overline{WE}$	W
4	$\overline{CE2}$	Rr	A1	D0	D1	A0	$\overline{WE}$	A1	A1	CE2	Din1	$\overline{CE2}$	D1	$\overline{RAS}$
5	$\overline{CE3}$	$\overline{Ra}$	A2	O0	O1	A3	A3	A2	A2	CE3	$\overline{Dout1}$	$\overline{CE3}$	$\overline{S1}$	A0
6	$\overline{Dout}$	$\overline{Q4}$	A3	D1	D2	A4	A4	A3	A3	D0	Din2	Dout	D2	A2
7	D	Q3	A4	O1	O2	A5	A5	A4	A4	A4	$\overline{Dout2}$	ADDinD	$\overline{S2}$	A1
8	GND	GND	A0	GND		VEE	VSS	A0	A0	GND	GND	GND	GND	VGG
9	E	Q2	VSS	O2	O3	NC	A6	GND	GND	A5	$\overline{Dout3}$	ADDinE	S3	VCC
10	F	Q1	VDD	D2	D3	A6	Dout	VCC	VCC	A6	Din3	ADDinF	D3	A5
11	G	Read	Din	O3	O4	D	ST	Din	Din	A7	Dout4	ADDinG	$\overline{S4}$	A4
12	$\overline{WE}$	$\overline{Write}$	Dout	D3	D4	$\overline{WE}$	$\overline{CE2}$	Dout	Dout	R/W	Din4	$\overline{WE}$	D4	A3
13	Din	B	CS	A3	A3	$\overline{CE2}$	$\overline{CE1}$	$\overline{CE}$	$\overline{CS}$	Din	ADDinD	Din	A3	$\overline{CS}$
14	H	A	A9	A2	A2	$\overline{CE1}$	A7	A9	A9	A3	ADDinC	ADDinH	A2	Dout
15	C	D1	A8	A1	A1	Q	A0	A8	A8	A2	ADDinB	ADDinC	A1	$\overline{CAS}$
16	VCC	VCC	A7	VCC		VCC2	VDD	A7	A7	VCC	VCC	VCC	VCC	VSS

Pin	ad	ae	af	ag	ah	ai	aj	ak	am	an	ao	ap	aq	ar③
1	$\overline{CE}$	A3	A6	VBB	A0	A0	A0	$\overline{E}$	$\overline{S}$	ADG	A	X4	A0	$\overline{WE}$
2	A0	A2	A8	Din	$\overline{CS}$	A1	A1	A0	A0	ADF	FM	X3	A1	Q3
3	A1	A1	A7	$\overline{WE}$	$\overline{WE}$	$\overline{E1}$	$\overline{S1}$	A1	A1	ADE	FW	X2	A2	Q2
4	A2	A0	VD	$\overline{RAS}$	D0	$\overline{E2}$	$\overline{S2}$	A2	A2	ADD	D1	X1	A3	VCC
5	A3	A5	VCC	A0	$\overline{Q0}$	$\overline{E3}$	$\overline{S3}$	A3	A3	ADA	Q1	US	$\overline{CS1}$	Q1
6	A4	A6	A5	A2	D1	$\overline{D0}$	$\overline{D0}$	A4	A4	ADB	D2	Y1	$\overline{CS2}$	Q0
7	Dout	A7	A1	A1	$\overline{Q1}$	A3	A3	DO	DO	ADC	Q2	Y2	$\overline{CS3}$	$\overline{CS}$
8	GND	GND	VDD	VDD	VSS	GND	GND	GND	GND	GND	0S	Y3	VEE	D1
9	A5	I/O1	A3	VCC	$\overline{Q2}$	A4	A4	A5	A5	I/O4	Q3	Y4	A4	D0
10	A6	I/O2	A2	A5	D2	A5	A5	A6	A6	I/O3	D3	WL2	A5	A3
11	A7	I/O3	A4	A4	$\overline{Q3}$	A6	A6	A7	A7	I/O2	Q4	WL1	A6	A2
12	A8	I/O4	DI	A3	D3	$\overline{W}$	$\overline{W}$	A8	A8	I/O1	D4	0S	A7	VEE
13	A9	$\overline{CE}$	D0	A6	A3	DI	DI	A9	A9	OE	D	QL	DI	A1
14	$\overline{WE}$	R/$\overline{W}$	D0	Dout	A2	A7	A7	$\overline{W}$	$\overline{W}$	W	C	QH	$\overline{WE}$	A0
15	Din	A4	R/W	$\overline{CAS}$	A1	A2	A2	DI	DI	ADH	B	WH2	DO	Q1
16	VCC	VCC	CS	VSS	VDD	VCC	VCC	VCC	VCC	VCC	US	WH1	VCC	D3

PN16(Cont.)

PN16

PN16(Cont.)

Pin	as	at	au	av	aw	ax	ay	az	ba	bb	bc	bd	be	bf
1	Q1	Dout	VBB	VBB	A0	A6	A0	$\overline{CE}$	A3	A0	A0	A0	VBB	SinA
2	Q0	A0	Din	D	$\overline{CS}$	A5	A1	AX0	A2	$\overline{CS}$	$\overline{CS}$	$\overline{CS}$	D	$\overline{CE}$
3	$\overline{CS}$	A1	$\overline{WE}$	$\overline{W}$	$\overline{WE}$	R/W	A2	AX1	A1	$\overline{WE}$	$\overline{WE}$	$\overline{WE}$	$\overline{W}$	$\overline{RW}$
4	D1	A2	$\overline{RAS}$	$\overline{RAS}$	D1	A1	VSS	AX2	A0	D0	Din1	Din1	$\overline{RE}$	Din1
5	D0	A3	A0	A0	O1	A2	VDD	AX3	A5	O0	Dout1	Dout1	A0	$\overline{Yout1}$
6	A3	A4	A2	A2	D2	A3	A3	AX4	A6	D1	Din2	Din2	A2	Din2
7	A2	A5	A1	A1	O2	A4	A4	Q	A7	O1	Dout2	Dout2	A1	$\overline{Yout2}$
8	VEE	VEE	VDD	VDD	GND	A0	NC	USS	GND	GND	GND	GND	VDD	GND
9	A1	A6	VCC	VCC	O3	VSS	A5	AY0	I/O1	O2	Dout3	Dout3	VCC	$\overline{Yout3}$
10	A0	A7	A5	A5	D3	VCC	A6	AY1	I/O2	D2	Din3	Din3	A5	Din3
11	D2	A8	A4	A4	O4	DI	A7	AY2	I/O3	O3	Dout4	Dout4	A4	$\overline{Y4}$
12	D3	A9	A3	A3	D4	D0	Din	AY3	I/O4	D3	Din4	Din4	A3	Din4
13	$\overline{WE}$	$\overline{WE}$	$\overline{CS}$	A6	A3	$\overline{CS}$	Dout	AY4	$\overline{CE}$	A3	A3	A3	A6	SinD
14	Q3	$\overline{CS}$	Dout	Q	A2	A9	Dout	R/W	R/W	A2	A2	A2	Q	SinC
15	Q2	Din	$\overline{CAS}$	$\overline{CAS}$	A1	A8	R/W	D	A4	A1	A1	A1	$\overline{CE}$	SinB
16	VCC	VCC	VSS	VSS	VCC	A7	CE	UDD	VCC	VCC	VCC	VCC	VSS	VCC

Pin	bg	bh	bi	bj	bk	bm	bn	bo	bp	bq	br	bs	bt	bu
1	$\overline{E}$	A3	VBB	VCC1	VCC1	VCC	NC	$\overline{RFR}$	VCC0	A0	$\overline{O1}$	Yout1	A6	A6
2	A0	A2	Din	A0	A0	A0	D	D	A0	A1	$\overline{O2}$	Yout2	A5	A5
3	A1	A1	$\overline{WE}$	A1	A1	A1	$\overline{W}$	$\overline{W}$	A1	$\overline{CS1}$	$\overline{O3}$	Yout3	A4	A4
4	A2	A0	$\overline{RAS}$	A2	$\overline{CS1}$	A2	$\overline{RAS}$	$\overline{RAS}$	$\overline{CS1}$	$\overline{CS2}$	$\overline{O4}$	Yout4	A3	A3
5	A3	A5	A0	A3	$\overline{CS2}$	A3	A0	A0	$\overline{CS2}$	$\overline{CS3}$	$\overline{O5}$	Yout5	A0	A0
6	A4	A6	A2	A4	A2	A4	A2	A2	A2	Dout	$\overline{O6}$	Yout6	A1	A1
7	Q	A7	A1	A5	A3	A5	A1	A1	A3	A2	$\overline{O7}$	Yout7	A2	A2
8	GND	GND	VDD	VEE	VEE	VEE	VDD	VCC	VEE	GND	GND	GND	GND	GND
9	A5	DQ0	A7	NC	A4	NC	A7	A7	A4	A3	$\overline{O8}$	Yout8	O4	O5
10	A6	DQ1	A5	A6	A5	A6	A5	A5	A5	A4	A0	BSA	O3	O4
11	A7	DQ2	A4	Din	NC	DIN	A4	A4	NC	A5	A1	BSB	O2	O3
12	A8	DQ3	A3	$\overline{WE}$	$\overline{WE}$	$\overline{WE}$	A3	A3	$\overline{WE}$	$\overline{WE}$	A2	BSC	O1	O2
13	A9	$\overline{E}$	A6	$\overline{CS2}$	Din	$\overline{CS0}$	A6	A6	Din	Din	A3	BSD	$\overline{E1}$	O1
14	$\overline{W}$	$\overline{W}$	Dout	$\overline{CS1}$	NC	$\overline{CS1}$	Q	Q	NC	A6	A4	E	A8	$\overline{BSE1}$
15	D	A4	$\overline{CAS}$	Dout	Dout	Dout	$\overline{CAS}$	$\overline{CAS}$	Dout	A7	$\overline{E}$	EG	A7	A7
16	VCC	VCC	VSS	VCC2	VCC2	VCC0	VSS	VSS	VCC	VCC	VCC	VCC	VCC	VCC

PN16(Cont.)

PN16

PN16(Cont.)

Pin	bv	bw	bx	by	bz	ca	cb	cc	cd	ce	cf	cg	ch	ci⑤
1	A6	O1	A6	A6	A6	VCC	A0	A6	A6	A3	A6	O1	D0	A6
2	A5	O2	A5	A5	A5	A1	A1	A5	A5	A2	A5	O2	D1	A5
3	A4	O3	A4	A4	A4	A2	A2	A4	A4	A1	A4	O3	D2	A4
4	A3	O4	A3	A3	A3	A0	A3	A3	A3	B1	A3	O4	D3	A3
5	A0	O5	A0	A0	A0	A6	CS0	A0	A0	B2	A0	O5	D4	A0
6	A1	O6	A1	A1	A1	A5	CS1	A1	A1	B3	A1	O6	D5	A1
7	A2	O7	A2	A2	A2	A7	CS2	A2	A2	B4	A2	O7	D6	A2
8	GND	GND	GND	GND	GND	VEE	VEE	GND	GND	VCC	GND	GND	VEE	GND
9	O4	O8	O4	O4	B4	A3	A4	O4	O4	A8	B3	O8	D7	O4
10	O3	A0	O3	O3	B3	A4	A5	O3	O3	CE	B2	A0	A0	O3
11	O2	A1	O2	O2	B2	Q3	A6	O2	O2	VGG	B1	A1	A1	O2
12	O1	A2	O1	O1	B1	Q2	A7	O1	O1	A7	B0	A2	A2	O1
13	$\overline{E1}$	A3	$\overline{CS}$	A9	CI1	CE	D	CS1	CE	A6	E1	A3	A3	$\overline{CS}$($\overline{PS}$)
14	E2	A4	A8	A8	CI2	Q1	WE	CS2	A8	A5	E2	A4	A4	A8
15	A7	$\overline{E1}$	A7	A7	A7	Q0	Q	A7	A7	A4	A7	CS	$\overline{CS}$	A7
16	VCC	VCC	VCC	VCC	VCC	VCC	VCC	VCC	VCC	VGI	VCC	VCC	VCC	VCC

Pin	cj⑤	ck⑤	cm⑤	cn	co	cp	cq	cr	cs	ct	cu	cv	cw	cx
1	A6	A6	A6	A6	A6	O1	A6	A6	O0	A3	A6	A3	Yout1	Q1
2	A5	A5	A5	A5	A5	O2	A5	A5	O1	A2	A5	A2	Yout2	Q2
3	A4	A4	A4	A4	A4	O3	A4	A4	O2	A1	A4	A1	Yout3	Q3
4	A3	A3	A3	A3	A3	O4	A3	A3	O3	A0	A3	ALC	Yout4	Q4
5	A0	A0	A0	A0	A0	O5	A0	A0	O4	A5	A0	$\overline{CLR}$	Yout5	Q5
6	A1	A1	A1	A1	A1	O6	A1	A1	O5	A6	A1	LCLk	Yout6	Q6
7	A2	A2	A2	A2	A2	O7	A2	A2	O6	A7	A2	CLkC	Yout7	Q7
8	GND	GND	GND	GND	GND	GND	GND	GND	VEE	GND	GND	GND	GND	OS
9	O4	O4	O4	O4	O4	O8	O5	O4	O7	Q0	O4	DCLk	Y8	Q8
10	O3	O3	O3	O3	O3	A0	O4	O3	A0	Q1	O3	$\overline{LE}$	BSA	A
11	O2	O2	O2	O2	O2	A1	O3	O2	A1	Q2	O2	Out	BSB	B
12	O1	O1	O1	O1	O1	A2	O2	O1	A2	Q3	O1	$\overline{OE}$	BSC	C
13	$\overline{CS2}$	$\overline{CS}$	$\overline{CS2}$/$\overline{PS2}$	P/E1	P/E1	A3	O1	$\overline{CE}$	A3	$\overline{S}$	$\overline{CE1}$	A6	BSD	D
14	$\overline{CS1}$	A8	$\overline{CS1}$/$\overline{PS1}$	A8	E2	A4	$\overline{E1}$	A8	A4	$\overline{P}$	$\overline{CE2}$	A5	BSE	E
15	A7	A7	A7	A7	A7	P/E1	A7	A7	$\overline{CE}$	A4	A7	A4	$\overline{EG}$	FE
16	VCC	VCC	VCC	VCC	VCC	VCC	VCC	VCC	VCC	VCC	VCC	VCC	VCC	US

PN16(Cont.)

PN16

PN16(Cont.)

Pin	cy	cz	da	db	dc	dd	de	df	dg	dh	di	dj	dk	dm
1	$\overline{MR}$	$\overline{CLR}$	OUT1	Øout	Øout	Ø12	I1	CLR	NC	NC	PARI8	S/L	IA1	T
2	J	J	NC	NC	NC	Ø11	C1	Q1	In1	In	Q6	CLk	IB1	IA
3	$\overline{K}$	$\overline{K}$	In1	InA	NC	I1	O1	$\overline{Q1}$	NC	NC	Q8	E	IC1	IB
4	P0	A	Ø1	OUTA	InA	Y1	I2	D1	Ø1	Ø1	PARI4	F	ID1	IC
5	P1	B	VCC	InB	OUTA	Y2	C2	D2	VCC	VCC	PARI3	G	VSS	VSS
6	P2	C	OUT2	OUTB	InB	I2	O2	$\overline{Q2}$	NC	NC	PARI2	H	S1	I0
7	P3	D	NC	NC	NC	Ø21	I3	Q2	OUT2	OUT	PARI1	OH	SI	IF
8	GND	GND	In2	VSS	VSS	GND	GND	GND	NC	NC	VSS	GND	T	S
9	$\overline{PE}$	S/L	OUT3	NC	NC	X	C3	CLk	NC	NC	P/SCONT	OH	Q	SI
10	CP	CLk	In3	InC	NC	$\overline{Ø22}$	O3	$\overline{Q3}$	In2	NC	CLk	SERin	R	Q5
11	$\overline{Q3}$	QD	Ø2	OUTC	OUTB	I3	$\overline{Ø2}$	Q3	NC	NC	SI	A	ID2	QD
12	Q3	QD	VDD	InD	InC	Y3	$\overline{Ø1}$	D3	Ø2	Ø2	Q7	B	GND	GND
13	Q2	QC	NC	OUTD	OUTC	Y4	O3	D4	VDD	VDD	PARI5	C	IC2	QC
14	Q1	QB	OUT4	NC	NC	I4	O2	$\overline{Q4}$	NC	NC	PARI6	D	IB2	QB
15	Q0	QA	NC	ØIn	ØIn	VDD	O1	Q4	OUT1	NC	PARI7	$\overline{CLkINH}$	S2	QS
16	VCC	VCC	In4	VGG	VGG	I	VDD	VCC	NC	NC	VDD	VCC	IA2	R

Pin	dn	do	dp	dq	dr③	ds	dt	du	dv	dw	dx	dy	dz	ea
1	RCLin	B0	PI8		DL	CL	Q0	$\overline{E}$	$\overline{E}$	$\overline{E}$	I-3	VRB	RC	VGG
2	CLk	B1	Q6	Q2	Q0	D	T/C	$\overline{CC}$	Q0	Q0	I-2	Din	InA	IR
3	NC	B2	Q8	Q3	Q1	RC	$\overline{K}$	Q0	$\overline{Q0}$	D0	I-1	Rin		SI
4	NC	ZB	PI4	C		REC	J	Q1	D0	D1	I0	$\overline{RC}$	OUTB	D0
5	NC	ZC	PI3	DR		CL2	R	Q2	D1	$\overline{Q1}$	I1	OUT	InC	D1
6	Q	C2	PI2	D3	Q2	NC	CLk	Q3	Q1	D2	I2	VDD		D2
7	$\overline{Q}$	C1	PI1	S2	Q3	CL2D	P/S	D	Q1	Q2	I3	VSS	OUTD	D3
8	VSS	GND	VSS		C	VSS	VSS	GND	GND	GND	GND	CP	VSS	GND
9	DELCLk	C0	P/SCONT	D2	DR	NC	DPO	CP	CP	CP	S1	CP	CP	$\overline{MR}$
10	MC	SLE	CLk	S1	D3	$\overline{CL1D}$	DPI	$\overline{S}$	Q2	Q3	S0	VRØ	VGG	Q3
11	NC	CP	SI	D1	S2	CL1	DP2	Q4	$\overline{Q2}$	D3	Y3	VGG	InD	Q2
12	NC	DA	Q7	D0		Q	DP3	Q5	D2	Q4	Y2	OUT	OUTC	Q1
13	NC	A2	PI5	DL	D2	CM	Q3	Q6	D3	D4	$\overline{OE}$	$\overline{RC}$	InB	Q0
14	NC	A1	PI6	Q0	S1	NC	Q2	Q7	$\overline{Q3}$	D5	Y1	RIN	OUTA	OR
15	Din	A0	PI7	Q1	D1	NC	Q1		Q3	Q5	Y0	Din		S0
16	VDD	VCC	VDD		D0	VDD	VDD	VCC	VCC	VCC	VCC	VRA	VDD	VSS

PN16(Cont.)

PN16

PN16(Cont.)

Pin	eb	ec	ed	ee	ef	eg	eh	ei	ej	ek	em	en	eo	ep
1	S	2CLkI	L2	$\overline{MR}$	S	M	D0	RCIRC	LOAD	OUTDIS	$\overline{Q1}$	Q2	CLk	$\overline{1Q}$
2	Q0	2Q4	L1	$\overline{Q7}$	SI	N	Q0	inA	CLk	OUTDIS	$\overline{Q2}$	D1	GA	ID
3	D0A	1Q3	R	Q7	NSI	Q1	Y0	NC	D5	OUTA	Q2	D2	DA	2D
4	D0B	1Q2	C	DS	QA	Q2	D1	OUTB	D6	OUTB	D2	T2	QA	3-4CLk
5	D1B	1Q1	CE	D1	A	Q3	Q1	inC	D7	OUTC	D3	P	GB	VCC
6	D1A	1CLR	B	D0	QB	Q4	Y1	NC	D8	OUTD	Q3	D3	DB	3D
7	Q1	1DATA	A	CP	B	CLk	$\overline{OE}$	OUTB	Q	CP	$\overline{Q3}$	D4	QB	4D
8	GND	GND	VSS	GND	OS	VSS	GND	VSS	GND	GND	GND	Q8	GND	$\overline{4Q}$
9	CP	1CLk	A/BSEL	CP	C	G1	CP	Øin	Q	DinDIS	$\overline{Q4}$	Q7	CLR	4Q
10	Q2	1Q4	Q	CP	QC	G2	Y2	VGG	SERin	DinDIS	Q4	Q5	QC	$\overline{3Q}$
11	D2A	2Q3	$\overline{Q}$	D0	D	Din4	Q2	inD	D1	InD	D4	Q6	DC	3Q
12	D2B	2Q2	L32	D1	QD	Din3	D2	OUTC	D2	InC	C	Ø	GC	GND
13	D3B	2Q1	L16	DS	$\overline{R}$	Din2	Y3	inB	D3	InB	$\overline{R}$	T1	QD	1-2CLk
14	D3A	2CLR	L8	Q7	CL	Din1	Q3	OUTA	D4	InA	D1	Q4	DD	$\overline{2Q}$
15	Q3	2DATA	L4	$\overline{Q7}$	NCL	RST	D3	NC	CLkINH	CLR	Q1	Q3	GD	2Q
16	VCC	VDD	VDD	VCC	VS	VDD	VCC	VDD	VCC	VCC	VCC	Q1	VCC	1Q

Pin	eq	er	es	et	eu	ev	ew	ex	ey	ez	fa	fb	fc	fd
1	CLK	CLk	NC	$\overline{MR}$	$\overline{MR}$	P7	P7	Q0	$\overline{MR}$	$\overline{MR}$	$\overline{Ø1}$	D1	VCC	VGG
2	PI5	PI3	OUT1	Q0	Q0	O5	O5	T/$\overline{C}$	Q0	Q0	O3(68)	CP	In8	SETA
3	PI6	PO3	In1	D0	$\overline{Q0}$	O7	O7	$\overline{K}$	$\overline{Q0}$	D0	O2(68)	NC	VGG	VGIA
4	PI7	PI4	CLk1	D1	D0	P3	P3	J	D0	D1	O4(64)	NC	OUT8	DoutA
5	PI8	PO4	CLk2	Q1	D1	P2	P2	MR	D1	Q1	03(64)	NC	In2	DinA1
6	SO	PI5	In2	D2	Q1	P1	P1	CP	$\overline{Q1}$	D2	O2(64)	$\overline{Q63}$	OUT2	DISELA
7	NC	PO5	OUT2	Q2	Q1	P0	P0	PE	Q1	Q2	O1(64)	$\overline{Q63}$	VGI	DinA2
8	VDD	VDD	VDD	GND	GND	VSS	VSS	VSS	VSS	VSS	GND	VSS	OUT16	VCC
9	R	R	NC	CP	CP	PE	PL	P0	CP	CP	O1(68)	CQ	OUT1b	CLkA
10	SI	SI	OUT3	Q3	Q2	CP	CP	P1	$\overline{Q2}$	Q3	I1	S	In1b	SETB
11	PI1	PI1	In3	D3	Q2	DS	DS	P2	Q2	D3	I2	NC	OUT4	VGIB
12	PI2	PO1	CLk3	Q4	D2	O6	O6	P3	D2	Q4	I3	NC	In4	DoutB
13	PI3	PI2	CLk4	D4	D3	P4	P4	Q3	D3	D4	I4	NC	OUT1a	DinB1
14	PI4	PO2	In4	D5	$\overline{Q3}$	P5	P5	Q2	$\overline{Q3}$	D5	VDD	NC	CLk	DISELB
15	SP	SP	OUT4	Q5	Q3	P6	P6	Q1	Q3	Q5	VGG	D0	In1a	DinB2
16	GND	GND	GND	YCC	VCC	VDD	VDD	VDD	VDD	VDD	$\overline{Ø2}$	VDD	In16	CLkB

PN16(Cont.)

PN16

PN16(Cont.)

Pin	fe	ff	fg	fh	fi	fj	fk	fm	fn	fo	fp	fq	fr③	fs
1	DinA1	$\overline{CLR}$	PA1	SERin	CLR	CLkB	OE	$\overline{RST}$	NC	H	$\overline{R}$	S2	Q63C	$\overline{MR}$
2	DISELA	J	PB1	A	RSSERin	Q4B	RSFTin	RSFTin	CLkINH	QF	SEr	S1	NC	DS
3	Din2	$\overline{K}$	PC1	B	A	Q3A	D0	D0	CLk	QH	A	MR	Q63D	P0
4	CLkA	P0	PD1	C	B	Q2A	D1	D1	LSFT0	D	B	CP1	$\overline{CPD}$	P1
5	VCC	P1	VCC	D	C	Q1A	D2	D2	NC	C	C	$\overline{CP0}$	DD	P2
6	SETB	P2	PE1	CLkINH	D	RSTA	D3	D3	LSFTIN	B	D	DB	$\overline{CPC}$	P3
7	VGIB	P3	SerIN	CLk	LSSERin	DATAA	LSFTin	LSFTin	NC	A	SEI	DA	DC	S
8	DoutB	GND	CLk	GND	GND	VSS	VSS	VSS	VSS	GND	0S	VSS	VSS	GND
9	DIB1	S/L	OUT	CLR	S0	CLkA	S0	S0	RCLCON	P/S	S0	SD	Q63B	$\overline{OE}$
10	DISBLB	CLk	CLR	E	S1	Q4A	S1	S1	NC	CK	S1	$\overline{Q}$	NC	$\overline{CP}$
11	DinB2	QD	PD2	F	CLk	Q3B	CLk	CLk	RSFTin	D	T	Q	DA	Q3
12	CLkB	QD	GND	G	QD	Q2B	Q3	Q3	RSFTout	QG	QD	S32	$\overline{CPA}$	O3
13	VGG	QC	PC2	QH	QC	Q1B	Q2	Q2	L/RCON	E	QC	S16	Q63A	O2
14	SETA	QB	PB2	inH	QB	RSTB	Q1	Q1	NC	F	QB	S8	DB	O1
15	VGIA	QA	PE2	S/L	QA	DATAB	Q0	Q0	NC	G	QA	S4	$\overline{CPB}$	O0
16	DoutA	VCC	PA2	VCC	VCC	VDD	VDD	VDD	VDD	VDD	US	VDD	VDD	VCC

Pin	ft	fu	fv③	fw	fx	fy	fz	ga	gb	gc	gd	ge	gf	gg
1	I1	VCC1	DL	CPB	DB	OUT1	O0	$\overline{EO0}$	Z0A	$\overline{MR}$	OUTA	OUTB	$\overline{CLR}$	OUTDIS
2	C1	Q2	Q0	O3B	CP	RL1	T/$\overline{C}$	$\overline{EO1}$	Z2A	J	Ø1	Ø1	Q1	OUTDIS
3	O1(72)	Q3	Q1	O2A	NC	In1	$\overline{K}$	Z0	WEA	$\overline{K}$	LC	ISA	D1	OUTA
4	I2	CP	VCC2	O1A	NC	W/R1	J	Z1	CPA	P0	NC	I2A	D2	OUTB
5	C2	DR	VCC1	O0A	NC	$\overline{CSX}$	MR	Z2	Z3A	P1	NC	ISB	Q2	OUTC
6	O2(72)	P3	Q2	MRA	063	$\overline{CSY}$	CP	Z3	Z1A	P2	InB	I1B	D3	OUTD
7	I3	S2	Q3	DA	$\overline{063}$	NC	PE	CP	DA	P3	NC	NC	Q3	CP
8	GND	VEE	CP	VSS	VSS	GND	VSS	VSS	VSS	VSS	VSS	VSS	VSS	VSS
9	C3	P2	DR	CPA	CQ	NC	P0	$\overline{EDO}$	DB	$\overline{PE}$	OUTB	OUTB	CLk	DInD1S
10	O3(72)	S1	P3	O3A	A/B	NC	P1	$\overline{ED1}$	Z1B	CP	Ø2	Ø2	Q4	DInDIS
11	$\overline{Ø2}$	P1	S2	O2B	NC	CLk	P2	D3	Z3B	$\overline{O3}$	NC	NC	D4	InD
12	$\overline{Ø1}$	P0	VEE	O1B	NC	W/R2	P3	D2	CPB	O3	NC	I2B	Q5	InC
13	O3(68)	DL	P2	O0B	NC	RL2	O3	D1	WEB	O2	VGG	VGG	D5	InB
14	O2(68)	Q0	S1	MRB	NC	OUT2	O2	D0	Z2B	O1	InA	I1A	D6	InA
15	O1(68)	Q1	P1	DB	DA	In2	O1	MR	Z0B	O0	VDD	VDD	Q6	CLR
16	VDD	VCC2	P0	VDD	VDD	VCC	VDD	VDD	VDD	VDD	NC	NC	VDD	VDD

PN16(Cont.)

PN16

PN16(Cont.)

Pin	gw	gx	gy	gz	ha	hb	hc	hd	he	hf	hg	hh	hi	hj	hk	hl
1	$\overline{RFSH}$	$\overline{RFSH}$	AInA	$\overline{CS}$	STR	InA	InD	NC	NC	A6	A3	A0	CE	CE	A6	Q0
2	Din	Din	$\overline{ME}$	A0	D	RECABC	RID	Din	Din	A5	A2	CS	A3	MA0	A5	Q1
3	$\overline{WRITE}$	$\overline{WRITE}$	$\overline{WE}$		A1	CLk	CLR	$\overline{W}$	$\overline{WE}$	A4	A1	WE	A2	MA1	A4	Q2
4	$\overline{RAS}$	$\overline{RAS}$	DI1	A2	Q1	InB	CLR	$\overline{RE}$	$\overline{RAS}$	A3	ADDC	D1	A1	MA2	A3	Q3
5	A0	A0	$\overline{DO1}$	A3	Q2	OB	OA	A0	A0	A0	$\overline{CLR}$	O1	A0	MA3	A0	Q4
6	A2	A2	DI2	A4	Q3	GND	L/RCON	A2	A2	A1	LCLK	D2	A4	MA4	A1	Q5
7	A1	A1	$\overline{DO2}$	DO	Q4	VCC	InA	A1	A1	A2	CLKC	O2	Dout	DO	A2	Q6
8	VCC	VCC	VSS	VSS	VSS	OC	CLk	VCC	VDD	GND	GND	GND	GND	VSS	GND	GND
9	NC	A7	$\overline{DO3}$	A5	QS	CLk	VCC	NC	A7	O4	DCLK	O3	A5	MA5	Q3	Q7
10	A5	A5	DI3	A6	QS	InC	RECABC	A5	A5	O3	$\overline{LE}$	D3	A6	MA6	Q2	A0
11	A4	A4	$\overline{DO4}$	A7	Q8	NC	OB	A4	A4	O2	OUT	O4	A7	MA7	Q1	A1
12	A3	A3	DI4	A8	Q7	RECD	InB	A3	A3	O1	$\overline{OUTE}$	D4	A8	MA8	Q0	A2
13	A6	A6	AInD	A9	Q6	InD	InC	A6	A6	E1	A6	A3	A9	MA9	G1	A3
14	DOUT	DOUT	AInC	$\overline{MWR}$	Q5	OD	OC	Q	Dout	E2	A5	A2	R/W	RD/WR	G4	A4
15	$\overline{CAS}$	$\overline{CAS}$	AInB	DI	OE	RID	GND	$\overline{CE}$	$\overline{CAS}$	A7	A4	A1	Din	DI	A7	G
16	VSS	VSS	VDD	VDD	VDD	OA	RECD	VSS	VSS	VCC	VCC	VCC	VDD	VDD	VCC	VCC

Pin	gh	gi	gj	gk③	gm	gn③	go	gp	gq	gr	gs	gt	gu	gv
1	$\overline{EQ0}$	2Q1	VCC1	Q3	R	Q3	In4	VBB	VCP	A6	O0	A6	NC	Q16A
2	$\overline{EQ1}$	1Q1	Q0	Q4	Q0	Q4	In8	Din	A1	A5	O1	A5	Din	Q48A
3	Q0	D1	Q1	Q5	Q1	Q5	OUT8	Dout	A2	A4	O2	A4	W	WEA
4	Q1	2Q2	Q2	VCC2	Q2	VCC	OUT7	A3	A0	A3	O3	A3	RAS	CLA
5	Q2	1Q2	D0	VCC1	D0	R	OUT6	A2	A6	A0	O4	A0	A0	Q64A
6	Q3	D2	D1	Q0	D1	Q0	OUT5	A1	A5	A1	O5	A1	A2	Q32A
7	CP	CLk	D2	Q1	D2	Q1	XR/DB	A0	A7	A2	O6	A2	A1	DA
8	VSS	GND	VEE	Q2	VEE	Q2	CLk	VSS	VEE	GND	GND	GND	VCC	VSS
9	$\overline{ED0}$	D3	CP	D0	CP	D0	VSS	VDD	A3	03	O7	O3	A7	DB
10	$\overline{ED1}$	1Q3	D3	01	D3	D1	VGG	NC	A4	02	A0	O2	A5	Q32B
11	D3	2Q3	D4	D2	D4	D2	OUT1	Ø2	Q4	01	A1	O1	A4	Q64B
12	D2	D4	D5	VEE	D5	VEE	OUT2	Ø1	Q3	00	A2	O0	A3	CLB
13	D1	1Q4	Q3	CP	Q3	CP	OUT3	$\overline{CS}$	$\overline{CE}$	$\overline{CS}$	A3	$\overline{CS1}$	A6	WEB
14	D0	2Q4	Q4	D3	Q4	D3	OUT4	R/$\overline{W}$	Q2	A8	A4	$\overline{CS2}$	Q	Q48B
15	R	STRBG	Q5	D4	Q5	D4	In1	CE	Q1	A7	CS	A7	$\overline{CAS}$	Q16B
16	VDD	VCC	VCC2	D5	VCC	D5	in2	VCC	VCC	VCC	VCC	VCC	VSS	VDD

PN16

PN16(Cont.)

hm	hn	ho	hp	hg
A6	A6	N/C	A6	A6
A5	A5	DIN	A5	A5
A4	A4	$\overline{\text{WRITE}}$	READ /WRITE	READ /WRITE
A3	A3	RAS	A1	A1
A0	A0	A0	A2	A2
A1	A1	A2	A3	A3
A2	A2	A1	A4	A4
GND	GND	VCC	A0	A0
O4	04	N/C	GND	GND
O3	03	A5	VCC	VCC
O2	02	A4	DIN	DIN
O1	01	A3	DOUT	DOUT
$\overline{\text{P/E1}}$	$\overline{\text{P/E1}}$	A6	$\overline{\text{CE}}$	$\overline{\text{CE}}$
$\overline{\text{E2}}$	A8	DOUT	A9	A9
A7	A7	$\overline{\text{CAS}}$	A8	A8
VCC	VCC	VSS	A7	A7

Registery Control #'s

① – Can Type Only.
② – Also Available in Can Type by some Mfgrs. See Type #Outline Dr.
③ – Flat Pack.
④ – Also Available in Flat Pack by some Mfgrs. See Type #Outline Dr.
⑤ – Pin 13 is also the programming pin.

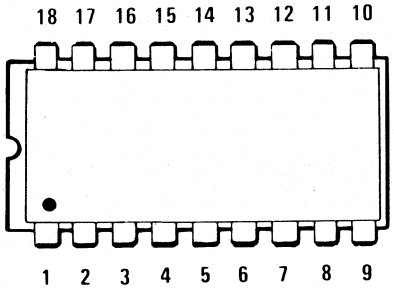

PIN 18

Pin	a	b	c	d	e	f	g	h	i	j	k	m	n	o
1	CE2	A0	A3	A4	VBB	A4	VSX	A3	A0	A6	$\overline{\text{A3}}$	VBB	VSB	A6
2	CE3	A4	A2	A3	I/O	A3	A9	A2	A1	A5	$\overline{\text{A2}}$	I/O	NC	A5
3	A0	RW	A1	A2	A0	A2	A8	A0	A2	A4	$\overline{\text{A0}}$	A0	A9	A4
4	A1	A1	A0	A1	A1	A1	A7	A1	A3	A3	$\overline{\text{A1}}$	A1	A8	A3
5	A2	A2	A5	A0	A2	A0	A6	NC	A4	A0	$\overline{\text{P}}$	A2	A7	A0
6	A3	A3	A6	BUS7	R/W	D7	A5	A9	A5	A1	$\overline{\text{A9}}$	$\overline{\text{R/W}}$	A6	A1
7	A4	A5	A7	BUS6	CE	D6	VREF	A6	Q	A2	$\overline{\text{A6}}$	CE	A5	A2
8	D0	A6	VSS	BUS5	A3	D5	RESET	A5	$\overline{\text{W}}$	E	$\overline{\text{A5}}$	A3	CS	$\overline{\text{CS}}$
9	GND	NC	OD	VSS	A4	VSS	A4	A7	VSS	VSS	$\overline{\text{A7}}$	A4	GND	GND
10	A5	VBB	CE2	BUS4	VDD	D4	A3	VBB	E	$\overline{\text{W}}$	VBB	VDD	A4	$\overline{\text{WE}}$
11	A6	VDD	DI/O1	BUS3	A5	D3	A2	VDD	D	DQ4	VDD	A5	A3	I/O4
12	A7	VSS	DI/O2	BUS2	A6	D2	A1	DI	A11	DQ3	$\overline{\text{DI}}$	A6	A2	I/O3
13	A8	PC	DI/O3	BUS1	A7	D1	A0	A8	A10	DQ2	A8	A7	A1	I/O2
14	A9	DI/O	DI/O4	BUS0	A8	D0	C1/CS	$\overline{\text{Dout}}$	A9	DQ1	DO	A8	A0	I/O1
15	WE	CE	CE1	CS	A9	CS	I/O	A4	A8	A9	$\overline{\text{A4}}$	A9	Din	A9
16	D1	A9	R/W	MRD	A10	RD	I/O	CE	A7	A8	CE	A10	Dout	A8
17	CE1	A8	A4	MWR	A11	WR	VDD	VSS	A6	A7	VSS	A11	R/W	A7
18	VCC	A7	VCC	VDD	VSS	VDD	VSX	R/W	VCC	VCC	$\overline{\text{R/W}}$	VSS	VDD	VCC

PN18

PN18(Cont.)

Pin	p	q	r	s	t	u	v	w	x	y	z	aa	ab	ac
1	GND	VBB	A0	Dout2	A3	CS	A3	A0	VSX	A0	A0	A6	A5	VBB
2	A3	A9	A1	Din2	A2	STR	A2	A1	A9	A1	A1	A5	A4	Din
3	A2	A10	A2	Din1	A1	ADR	A1	A2	A8	A2	A2	A4	I/O1	$\overline{W}$
4	A1	A11	A3	Dout1	A0	DX0	A0	A3	A7	A3	A3	A3	$\overline{CE}$	$\overline{RAS1}$
5	A0	TSP	A4	AB	A5	DX1	A5	A4	A6	A4	A4	A0	I/O2	$\overline{RAS2}$
6	Din	I/O	A5	AA	A6	DX2	A6	A5	A5	A5	A5	A1	I/O3	A0
7	Dout	A0	D0	AF	A7	DX3	A7	Dout	VREF	Dout	Q	A2	R/$\overline{W}$	A2
8	VCC	A1	R/$\overline{W}$	AE	GND	DX4	GND	$\overline{WE}$	RESET	$\overline{WE}$	$\overline{W}$	$\overline{S}$	I/O4	A1
9	CS	A2	GND	GND	DI/O1	GND	STR	VSS	A4	GND	VSS	VSS	VSS	VDD
10	Ø1	A3	$\overline{S}$	AD	DI/O2	DX5	CS2	$\overline{CE}$	A3	$\overline{CS}$	$\overline{S}$	$\overline{WE}$	A1	VCC
11	Ø2	A4	DI	AC	DI/O3	DX6	I/01	Din	A2	Din	D	I/O4	A0	A5
12	R/W	A5	A6	ME	DI/O4	DX7	I/02	A11	A1	A11	A11	I/O3	A8	A4
13	VDD	CE	A7	WE	$\overline{CES}$	DX8	I/03	A10	A0	A10	A10	I/O2	A9	A3
14	A7	VDD	A8	Dout4	$\overline{ST}$	DX9	I/04	A9	CL/CS	A9	A9	I/O1	A2	A6
15	A6	A6	A9	Din4	$\overline{CEL}$	DX10	CS1	A8	I/OB	A8	A8	A9	A3	Q
16	A5	A7	A10	Din3	$\overline{WE}$	DX11	R/W	A7	I/OA	A7	A7	A8	A7	$\overline{CAS2}$
17	A4	A8	A11	Dout3	A4	MSEL	A4	A6	VDD	A6	A6	A7	A6	$\overline{CAS1}$
18	VSUB	VSS	VCC	VCC	VCC	VCC	VCC	VCC	VSS	VCC	VCC	VCC	VCC	VSS

Pin	ad	ae	af	ag	ah	ai	aj	ak	am	an	ao③	ap	aq	ar
1	$\overline{CS2}$	A0	A0	A6	Dout	A0	A0	A5	$\overline{S1}$	A3	VBB	A0	$\overline{CS1}$	VCC
2	$\overline{CS1}$	A1	A1	A5	A0	A1	A1	A4	E	A2	Din	A1	$\overline{CE}$	NC
3	A0	A2	A4	A4	A1	A2	A2	A3	A0	A1	$\overline{W}$	A4	A0	O5
4	A1	A3	A5	A3	A2	A3	A3	A2	A1	A0	$\overline{RAS1}$	A5	A1	O4
5	A2	A4	A2	A0	A3	A4	A4	A0	A2	A5	A0	A2	A2	O3
6	A3	A5	A3	A1	A4	A5	A5	A1	A3	A6	A2	A3	A3	O2
7	A4	Dout	Q	A2	A5	Q	Q	Y	A4	A7	A1	Q	A4	O1
8	Dout	$\overline{WE}$	$\overline{W}$	$\overline{E}$	A6	$\overline{W}$	$\overline{W}$	$\overline{E}$	Q	GND	VDD	$\overline{W}$	Dout	OUTINH
9	GND	GND	GND	GND	GND	GND	GND	GND	GND	$\overline{E}$	$\overline{RAS2}$	VSS	GND	GND
10	A5	$\overline{CE}$	$\overline{E}$	$\overline{W}$	A7	$\overline{E}$	$\overline{E}$	$\overline{W}$	A5	$\overline{S2}$	$\overline{CAS2}$	$\overline{S}$	A5	A2
11	A6	Din	D	DQ4	A8	D	D	DQ3	A6	DQ0	VCC	D	A6	A1
12	A7	A6	A6	DQ3	A9	A10	A11	DQ2	A7	DQ1	A5	A6	A7	A0
13	A8	A7	A7	DQ2	A10	A9	A10	DQ1	A8	DQ2	A4	A7	A8	A8
14	A9	A8	A8	DQ1	A11	Y	A9	DQ0	$\overline{A9}$	DQ3	A3	A8	A9	A7
15	$\overline{WE}$	A9	A9	A9	$\overline{WE}$	A8	A8	A8	W	$\overline{S1}$	A6	A9	$\overline{WE}$	A6
16	Din	A10	A10	A8	$\overline{CS}$	A7	A7	A7	D	$\overline{W}$	Dout	A10	Din	A5
17	$\overline{CS3}$	A11	A11	A7	Din	A6	A6	A6	$\overline{S2}$	A4	$\overline{CAS1}$	A11	$\overline{CS2}$	A4
18	VCC	VCC	VCC	VCC	VCC	VCC	VCC	VCC	VCC	VCC	VSS	VCC	VCC	A3

PN18

PN18 (Cont.)

Pin	as	at	au	av	aw	ax	ay	az	ba	bb	bc	bd	be	bf
1	A6	A6	RESEL	A6	A6	A9	A6	A6	A6	A7	A6	Y1	VSS	GND
2	A5	A5	$\overline{CE}$	A5	A5	A6	A5	A5	A5	A6	A5	Y2	Dout	SYNC
3	A4	A4	$\overline{OEH}$	A4	A4	A5	A4	A4	A4	A5	A4	Y3	A0	$\overline{CE}$
4	A3	A3	DX0	A3	A3	A4	A3	A3	A3	A4	A3	Y4	A5	$\overline{WE}$
5	A0	A2	DX1	A0	A0	A3	A0	A0	A0	A3	A0	OSC	A1	A0
6	A1	A1	DX2	A1	A1	A0	A1	A1	A1	A0	A1	KBM	A2	A1
7	A2	A0	DX3	A2	A2	A1	A2	A2	A2	A1	A2	X4	A3	A2
8	$\overline{CS1}$	$\overline{CE1}$	DX4	A10	$\overline{CE1}$	A2	$\overline{E2}$	$\overline{E2}$	A10	A2	A10	X3	A4	A3
9	GND	GND	GND	GND	GND	GND	GND	GND	GND	GND	GND	GND	VDD	GND
10	$\overline{CS2}$	$\overline{CE2}$	DX5	$\overline{CE}$	$\overline{CE2}$	O4	$\overline{E1}$	$\overline{P/E1}$	$\overline{E1}$	O5	$\overline{CS}$	X2	Din	VBB
11	O4	O4	DX6	O4	O4	O3	O4	O4	O4	O4	O4	X1	WE	A4
12	O3	O3	DX7	O3	O3	O2	O3	O3	O3	O3	O3	DAVA	Ø2	A5
13	O2	O2	DX8	O2	O2	O1	O2	O2	O2	O2	O2	$\overline{OUTE}$	Ø3	A6
14	O1	O1	DX9	O1	O1	$\overline{E1}$	O1	O1	O1	O1	O1	DoutD	VBB	A7
15	A9	A9	DX10	A9	A9	A8	A9	A9	A9	$\overline{E1}$	A9	DoutC	Ø1	Dout
16	A8	A8	DX11	A8	A8	A7	A8	A8	A8	$\overline{E2}$	A8	DoutB	Ø4	DIn
17	A7	A7	OEL	A7	A7	E2	A7	A7	A7	A8	A7	DoutA	CS	SE
18	VCC	VCC	VCC	VCC	VCC	VCC	VCC	VCC	VCC	VCC	VCC	VCC	CE	VDD

Pin	bg	bh	bi	bj	bk	bm	bn	bo	bp	bq	br	bs	bt	bu
1	A3	A2	A6	A6	A6	A6	MA4	$\overline{F}$	A0	AD0	A3	Dout	A0	A6
2	A2	A1	A7	A5	A5	A5	MA3	$\overline{E}$	A1	AD1	A2	A0	A1	A5
3	A1	A0	A8	A4	A4	A4	MA2	G	A2	AD2	A1	A1	A4	A4
4	A0	A8	A9	A3	A3	A3	MA1	DX0	A3	AD3	A0	A2	A5	A3
5	A5	A9	A10	A2	A0	A0	MA0	DX1	A4	AD4	A11	A3	A2	A0
6	A6	DI/O1	A11	A1	A1	A1	Bus7	DX2	A5	AD5	A10	A4	A3	A1
7	A7	DI/O2	Q	A0	A2	A2	Bus6	DX3	Q	A06	Dout	A5	Dout	A2
8	VSS	$\overline{CE}$	$\overline{W}$	$\overline{CS1}$	$\overline{CE}$	$\overline{S}$	Bus5	DX4	$\overline{W}$	AD7	WE	A6	R/W	CE
9	OUTDIS	VSS	GND	GND	GND	GND	VSS	GND	GND	VSS	VSS	VEE	GND	GND
10	$\overline{CE2}$	$\overline{WE}$	E	CS2	$\overline{WE}$	$\overline{W}$	Bus4	DX5	$\overline{S}$	A8	CE	A7	CE	R/W
11	DI/O1	DI/O3	D	O3	I/O4	DQ3	Bus3	DX6	D	A9	Din	A8	Din	DI/O4
12	DI/O2	DI/O4	A0	O2	I/O3	DQ2	Bus2	DX7	A11	CE2	A6	A9	A6	DI/O3
13	DI/O3	A6	A1	O1	I/O2	DQ1	Bus1	DX8	A10	$\overline{CE1}$	A9	A10	A7	DI/O2
14	DI/O4	A7	A2	O0	I/O1	DQ0	Bus0	DX9	A9	$\overline{CS}$	A8	A11	A8	DI/O1
15	$\overline{CE1}$	A5	A3	A9	A9	A9	$\overline{CS}$	DX10	A8	ALE	A7	WE	A9	A9
16	$\overline{WE}$	A4	A4	A8	A8	A8	$\overline{MRD}$	DX11	A7	$\overline{WR}$	A4	C7	A10	A8
17	A4	A3	A5	A7	A7	A7	$\overline{MWR}$	$\overline{G}$	A6	$\overline{RD}$	A5	Din	A11	A7
18	VCC	VCC	VCC	VCC	VCC	VCC	VDD	VCC	VCC	VCC	VCC	VCC	VDD	VDD

PN18

PN18(Cont.)

Pin	bv	bw	bx	by	bz	ca	cb	cc	cd	ce	cf			
1	D0	A3	A6	A2	A6	A7	A9	AQ0	$\overline{\text{RFSH}}$	AO	DOUT			
2	D1	A2	A5	A1	A5	A6	A6	AQ1	DIN	A1	A0			
3	D2	A5	A4	A0	A4	A5	A5	AQ2	$\overline{\text{Write}}$	A4	A1			
4	D3	A6	A3	A11	A3	A4	A4	AQ3	$\overline{\text{RAS1}}$	A5	A2			
5	CE	A7	A0	A10	A0	A3	A3	AQ4	A0	A2	A3			
6	R/W	A0	A1	A9	A1	A0	A0	AQ5	A2	A3	A4			
7	NR	A1	A2	Dout	A2	A1	A1	AQ6	A1	DOUT	A5			
8	MG	VDD	A10	WE	G1	A2	A2	AQ7	VCC	$\overline{\text{WE}}$	A6			
9	VSS	AS	GND	VSS	GND	GND	GND	VSS	$\overline{\text{RAS2}}$	GND	VEE			
10	A0	VPP	CS	CE	G2	G	O4	A8	$\overline{\text{CAS 2}}$	$\overline{\text{CE}}$	A7			
11	A1	D3	O3	Din	Q3	Q3	O3	A9	A7	DIN	A8			
12	A2	D2	O2	A8	Q2	Q2	O2	A10	A5	A6	A9			
13	A3	D1	O1	A7	Q1	Q1	O1	$\overline{\text{E}}$	A4	A7	A10			
14	A4	D0	O0	A6	Q0	Q0	P/$\overline{\text{EI}}$	$\overline{\text{S}}$	A3	A8	A11			
15	A5	CS/ME	A9	A5	A9	A10	A8	M	A6	A9	$\overline{\text{WE}}$			
16	A6	R/W	A8	A4	A8	A9	A7	E	DOUT	A10	$\overline{\text{CS}}$			
17	A7	A4	A7	A3	A7	A8	E2	$\overline{\text{G}}$	$\overline{\text{CAS1}}$	A11	DIN			
18	VDD	GND	VCC	VCC	VCC	VCC	VCC	VCC	VSS	VCC	VCC			

Registery Control #'s

① – Can Type Only.
② – Also Available in Can Type by some Mfgrs. See Type #Outline Dr.
③ – Flat Pack.

PN20

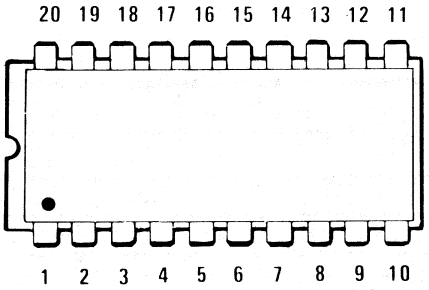

Pin	a	b	c	d	e	f	g⑥	h⑥	i	j⑥	k⑥	m	n	o
1	ADDinA	NC	OE	A6	A3	A0	A0	A0	A0	A0	A0	A0	A0	A0
2	ADDinB	A0	A6	A5	A2	A1	A1	A1	A1	A1	A1	A1	A1	A1
3	ADDinC	A1	A5	A4	A1	A2	A2	A2	A2	A2	A2	A2	A2	A2
4	ADDinD	A2	A4	A3	A0	A3	A3	A3	A3	A3	A3	A3	A3	A3
5	Din3	A3	A3	CS2	A5	A4	A4	A4	A4	A4	A4	A4	A4	A4
6	ADDinE	A4	A0	A0	A6	O1	O1	O1	O1	O1	O1	O1	O1	O1
7	ADDinF	A5	A1	A1	A7	O2	O2	O2	O2	O2	O2	O2	O2	O2
8	ADDinG	Q	A2	A2	GND	O3	O3	O3	O3	O3	O3	O3	O3	O3
9	Din2	$\overline{W}$	S	$\overline{CS1}$	I/O1	O4	O4	O4	O4	O4	O4	O4	O4	O4
10	GND	VSS	VSS	GND	I/O2	GND	GND	GND	GND	GND	GND	GND	GND	GND
11	Din1	$\overline{S}$	W	$\overline{WE}$	I/O3	O5	O5	O5	O5	O5	O5	O5	O5	O5
12	Dout1	D	I/O4	I/O4	I/O4	O6	O6	O6	O6	O6	O6	O6	O6	O6
13	Dout2	A11	I/O3	I/O3	A9	O7	O7	O7	O7	O7	O7	O7	O7	O7
14	Dout3	A10	I/O2	I/O2	A8	O8	O8	O8	O8	O8	O8	O8	O8	O8
15	Dout4	A9	I/O1	I/O1	CE2	$\overline{E1}$	$\overline{CS1}$	$\overline{CS}$	$\overline{E1}$	$\overline{PS1}$	$\overline{PS}$	$\overline{P/E1}$	$\overline{E1}$	P/E1
16	$\overline{OE}$	A8	A9	OD	OD	A5	$\overline{CS2}$	A5	$\overline{E2}$	$\overline{PS2}$	A5	$\overline{E2}$	A5	A5
17	W	A7	A8	A9	$\overline{CE1}$	A6	A5	A6	A5	A5	A6	A5	A6	A6
18	ADDinH	A6	A7	A8	R/W	A7	A6	A7	A6	A6	A7	A6	A7	A7
19	Din4	VCC2	VCC2	A7	A4	A8	A7	A8	A7	A7	A8	A7	A8	A8
20	VCC	VCC1	VCC1	VCC	VCC	VCC	VCC	VCC	VCC	VCC	VCC	VCC	VCC	VCC

PN20(Cont.)

PN20

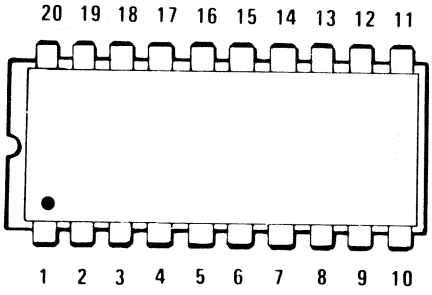

PN20(Cont.)

Pin	p	q	r	s	t	u	v	w	x	y	z	aa	ab	ac
1	A0	A0	A0	Y1	$\overline{OE}$	$\overline{OE}$	D0	E	InA	I5	REPB−	A6	A0	A0
2	A1	A1	A1	Y2	D0	Y0	W0	Q0	InB	I4	SWAP+	A5	A1	A1
3	A2	A2	A2	Y3	D1	DD	Y0	D0	InC	I3	GEN−	A4	A2	A2
4	A3	A3	A3	Y4	D2	D1	D1	D1	InD	I2	GEN+	A3	A3	A3
5	A4	A4	A4	Y5	D3	Y1	W1	Q1	InE	I1	SWAP−	A2	A4	A4
6	O1	O1	O1	OSC	D4	Y2	Y1	Q2	InF	I0	RS−	A1	A5	O0
7	O2	O2	O2	KBM	D5	D2	$\overline{OE}$-W	D2	InG	S0	R/R+	A2	A6	O1
8	O3	O3	O3	X4	D6	D3	$\overline{OE}$-Y	D3	OUTF0	S1	RR−	A10	Dout	O2
9	O4	O4	O4	X3	D7	Y3	CP	Q3	OUTF1	S2	REPAB+	$\overline{E2}$	$\overline{WE}$	O3
10	GND	GND	GND	GND	GND	GND	GND	GND	GND	GND	REPA	GND	VSS	GND
11	O5	O5	O5	X2	CP	CP	Y2	CP	OUTF2	O4	CT+	$\overline{ET}$	$\overline{CS}$	O4
12	O6	O6	O6	X1	O7	Y4	W2	Q4	OUTF3	O3	DT	A11	Din	O5
13	O7	O7	O7	DAYA	O6	D4	D2	D4	OUTF4	O2	LT	O4	A13	O6
14	O8	O8	O8	OUTE	05	D5	Y3	D5	OUTF5	O1		O3	A12	O7
15	A9	$\overline{CE}$	$\overline{LC}$	DoutE	O4	Y5	W3	Q5	InL	$\overline{E}$		O2	A11	$\overline{CS}$
16	A5	A5	$\overline{ET}$	DoutD	O3	Y6	D3	Q6	InH	I9		O1	A10	A5
17	A6	A6	A5	DoutC	O2	D6	$\overline{E}$	D6	InI	I8	Y2	A9	A9	A6
18	A7	A7	A6	DoutB	O1	D7	POL	D7	InJ	I7	Y1	A8	A8	A7
19	A8	A8	A7	DoutA	O0	Y7	$\overline{CLR}$	Q7	InK	I6	X2	A7	A7	A8
20	VCC	VCC	VCC	VCC	VCC	VCC	VCC	VCC	VCC	VCC	X1	VCC	VCC	VCC

PN20 (cont.)

PN20

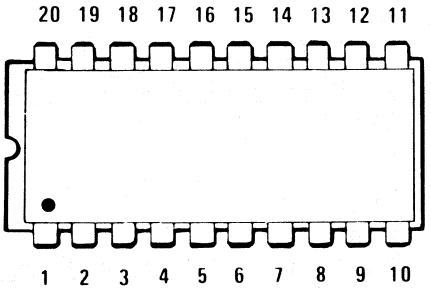

PN20 (cont.)

Pin	ad	ae	af	ag	ah		ai							
1	A6	A0	A0	A0	BUSY		BUSY							
2	A5	A1	A1	A1	A0		A0							
3	A4	A2	A2	A2	A1		A1							
4	A3	A3	A3	A3	A2		A2							
5	CE2	A4	A4	A4	A3		A3							
6	A0	Q0	Q0	O1	A4		A4							
7	A1	Q1	Q1	O2	A5		A5							
8	A2	Q2	Q2	O3	A6		A6							
9	$\overline{CE1}$	Q3	Q3	O4	4k/16k		A7							
10	GND	GND	GND	GND	GND		GND							
11	$\overline{WE}$	Q4	Q4	05	$\overline{RAS}$ Hi		$\overline{RAS}$ Hi							
12	I/O4	Q5	Q5	06	$\overline{RAS}$ Lo		$\overline{RAS}$ Lo							
13	I/O3	Q6	Q6	07	REQ 2		REQ2							
14	I/O2	Q7	Q7	08	REQ1		REQ1							
15	I/O1	$\overline{G1}$	G	P/$\overline{E1}$	$\overline{RAS}$		$\overline{RAS}$							
16	$\overline{OE}$	$\overline{G2}$	A5	A5	$\overline{HOLD}$		$\overline{HOLD}$							
17	A9	A5	A6	A6	Ready /NC		Ready /NC							
18	A8	A6	A7	A7	NC /Cycle	Steal	NC /Cycle	Steal						
19	A7	A7	A8	A8	BURST		BURST							
20	VCC	VCC	VCC	VCC	VCC		VCC							

Registery Control #'s

① — Can Type Only.
② — Also Available in Can Type by some Mfgrs. See Type #Outline Dr.
③ — Flat Pack.
④ — Also Available in Flat Pack by some Mfgrs. See Type #Outline Dr.
⑤ — Pin 13 is also the programming pin.
⑥ — Pin 15 is also the programming pin.

PN22

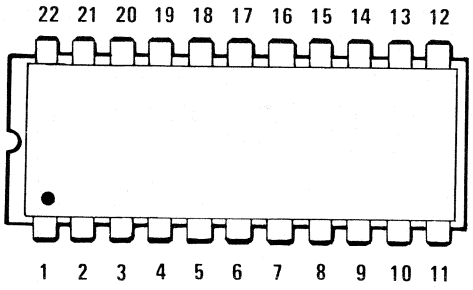

Pin	a	b	c	d	e	f	g	h	i	j	k	m	n	o
1	VSY	VBB	VSUb	A3	A3	A3	VSX	VBB	A3	VBB	A3	VBB	VBB	VSX
2	A0	A9	Dout3	A2	A2	A2	A0	A9	A2	A3	A2	A9	A1	A9
3	VSS	A10	Din3	A1	A1	A1	VSS	A10	A1	PS	A1	A10	A0	A10
4	NC	A11	A7	A0	A0	A0	NC	A11	A0	Din	A0	A11	DIDO	A11
5	CHPP	CS	A6	A5	A5	A5	QP	$\overline{CS}$	A5	A11	A5	$\overline{CS}$	A(	NC
6	Din	DI	A5	A6	A6	A6	Din	Din	A6	CE	A6	Din	A8	Din
7	WE	D0	A4	A7	A7	A7	WE	$\overline{Dout}$	A7	Dout	A7	$\overline{Dout}$	A7	$\overline{Dout}$
8	A9	A0	A/CSL	VSS	VSS	GND	A9	A0	VSS	CS	GND	A0	DI/DO	A0
9	A8	A1	VCC	Din1	DI0	DI1	A8	A1	DI1	A4	DI1	A1	$\overline{R/W}$	A1
10	A7	A2	Din4	Dout1	DO0	DO1	A7	A2	DO1	A2	DO1	A2	VCC	A2
11	A6	VCC	Dout4	Din2	DI1	DI2	A6	VCC	DI2	VCC	DI2	VCC	GND	VRF
12	A5	$\overline{R/W}$	Dout1	Dout2	DO1	DO2	A5	$\overline{WE}$	DO2	VSS	DO2	WE	NC	R/W
13	NC	A3	Din1	Din3	DI2	DI3	A10	A3	DI3	A0	DI3	A3	CS	A3
14	CS	A4	$\overline{CS}$	Dout3	DO2	DO3	CS	A4	DO3	R/W	DO3	A4	A2	A4
15	VREF	A5	A0	Din4	DI3	DI4	VREF	A5	DI4	A5	DI4	A5	A5	A5
16	$\overline{Dout}$	NC	A1	Dout4	DO3	DO4	$\overline{Dout}$	A12	DO4	A6	DO4	NC	A6	NC
17	Dout	CE	A2	CS	CS2	CE2	Dout	CE	CE2	A7	CE2	CE	DI/DO	CS
18	VDD	VDD	A3	OD	$\overline{MRD}$	OD	VDD	VDD	OD	A8	OD	VDD	DI/DO	VDD
19	A4	A6	R/W	CS	CS1	CE1	A4	A6	CE1	A9	CE1	A6	A4	A6
20	A3	A7	GND	R/W	$\overline{MWR}$	R/W	A3	A7	$\overline{WE}$	A10	R/W	A7	A3	A7
21	A2	A8	Din2	A4	A4	A4	A2	A8	A4	A1	A4	A8	NC	A8
22	A1	VSS	Dout2	VDD	VDD	VCC	A1	VSS	VCC	VDD	VCC	VSS	VDD	GND

PN22(Cont.)

PN22

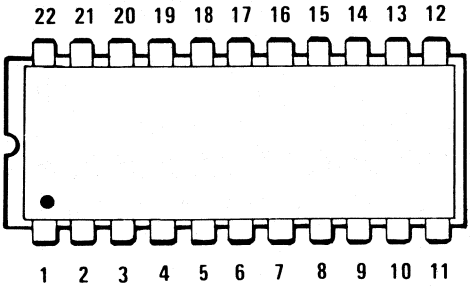

PN22(Cont.)

Pin	p	q	r	s	t	u	v	w	x	y	z	aa	ab	ac
1	VBB	VBB	VBB	VBB	A3	A3	VBB	A0	VSX	VSX	VSX	VSX	A6	$\overline{BS1}$
2	A9	A9	A9	A9	A2	A2	A9	I/O1	VSS	NC	A0	A0	A5	$\overline{BS0}$
3	A10	A10	A10	A10	A1	A1	A10	I/O2	A9	WE	VSS	VSS	A4	A0
4	A11	A11	A11	A11	A0	A0	A11	I/O3	A8	Dout	NC	$\overline{QP0}$	A3	A1
5	NC	NC	NC	NC	A5	A5	$\overline{CS}$	I/O4	A7	VDD	$\overline{QP}$	$\overline{QP1}$	A2	A2
6	Din	Din	Din	Din	A6	A6	Dout	I/O5	A6	A5	Din	Din	A1	A3
7	$\overline{Dout}$	$\overline{Dout}$	$\overline{Dout}$	$\overline{Dout}$	A7	A7	Dout	I/O6	A5	A6	WE	WE	A0	A4
8	A0	A0	A0	A0	GND	GND	A0	I/O7	NC	A7	A9	A9	I/O1	A5
9	A1	A1	A1	A1	DI1	DI1	A1	I/O8	VREF	A8	A8	A8	I/O2	A6
10	A2	A2	A2	A2	DO1	DO1	A2	$\overline{CS1}$	RST	A9	A7	A7	I/O3	A7
11	VCC	VCC	NC	NC	DI2	DI2	VCC	VSS	A4	A10	A6	A6	VSS	VEE
12	$\overline{R}/W$	$\overline{R}/W$	$\overline{R}/W$	R/W	DO2	DO2	R/W	R/$\overline{W}$	A3	A0	A5	A5	I/O4	DI3
13	A3	A3	A3	A3	DI3	DI3	A3	$\overline{OD}$	A2	A1	NC	A10	I/O5	DI2
14	A4	A4	A4	A4	DO3	DO3	A4	CS2	A1	A2	CS	CS	I/O6	DI1
15	A5	A5	A5	A5	DI4	DI4	A5	A7	A0	A3	VREF	VREF	I/O7	DI0
16	N/C	NC	Dout	Dout	DO4	DO4	DIN	A6	NC	A4	$\overline{Dout}$	$\overline{Dout}$	I/O8	DO3
17	$\overline{CS}$	$\overline{CS}$	$\overline{CS}$	CS	$\overline{CES}$	CE	CE	A5	Clk	Clk2	Dout	Dout	$\overline{WE}$	DO2
18	VDD	VDD	VDD	VDD	$\overline{ST}$	STR	VDD	A4	NC	Clk3	VDD	VDD	$\overline{CE}$	D01
19	A6	A6	A6	A6	$\overline{CEL}$	CS	A6	A3	I/OB	Clk1	A4	A4	A9	DO0
20	A7	A7	A7	A7	$\overline{WE}$	R/W	A7	A2	I/OA	VSS	A3	A3	A8	VCCO
21	A8	A8	A8	A8	A4	A4	A8	A1	VDD	Din	A2	A2	A7	VCC
22	VSS	GND	GND	VSS	VCC	VCC	VSS	VDD	CS	$\overline{CS}$	A1	A1	VCC	$\overline{WE}$

PN22(Cont.)

PN22

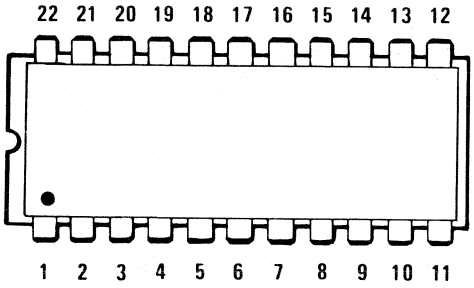

PN22(Cont.)

Pin	ad	ae	af	ag	ah	ai	aj	ak	am	an	ao	ap	aq	ar
1	A3	VBB	VBB	D7	DO0	A3	A3	A6	A6	A3	NC	A6	A6	A6
2	A2	A3	A9	D6	DO1	A2	A2	A7	A7	A2	VDD	A7	A7	A7
3	A1	A4	A10	D5	DI0	A1	A1	A8	A8	A1	E/W	A8	A8	A8
4	A0	A5	A11	D4	DI1	A0	A0	A9	A9	A0	D0	A9	A9	A9
5	A5	CS	$\overline{CS}$	D3	A0	A5	A5	DQ0	A10	A5	D1	DI/O1	DI/O1	A10
6	A6	Din	Din	D2	A1	A6	A6	DQ1	A11	A6	D2	DI/O2	DI/O2	A11
7	A7	$\overline{Dout}$	$\overline{Dout}$	D1	A2	A7	A7	DQ2	D	A7	D3	DI/O3	DI/O3	Din
8	VSS	A8	A0	D0	A3	VSS	GND	DQ3	Q	GND	H	DI/O4	DI/O4	Dout
9	D0	A9	A1	OD	A4	DI1	DO	$\overline{G}$	$\overline{G}$	D0	NC	OD	OD	OD
10	Q0	A7	A2	$\overline{WE}$	A5	DO1	Q0	NC	NC	Q0	GND	MS	NC	MS
11	D1	VCC	VCC	GND	VEE	DI2	D1	GND	GND	D1	W	VSS	VSS	VSS
12	Q1	R/W	R/W	$\overline{CE}$	A6	DO2	Q1	$\overline{E}$	$\overline{E}$	Q1	R	CE	CE	CE
13	D2	A6	A3	$\overline{L}$	A7	DI3	D2	G	G	D2	CE	0E	OE	OE
14	Q2	A11	A4	A0	A8	DO3	Q2	$\overline{S}$	$\overline{S}$	Q2	A0	$\overline{CS}$	$\overline{CS}$	$\overline{CS}$
15	D3	A10	A5	A1	A9	DI4	D3	$\overline{W}$	$\overline{W}$	D3	A1	$\overline{WE}$	$\overline{WE}$	$\overline{WE}$
16	Q3	NC	NC	A2	$\overline{CS}$	DO4	Q3	A5	A5	Q3	A2	A5	A5	A5
17	CS1	CE	CE	A3	$\overline{WE}$	CS2	S	A4	A4	$\overline{S2}$	A3	A4	A4	A4
18	$\overline{E0}$	VDD	VDD	A4	DI3	OD	$\overline{G}$	A3	A3	$\overline{E}$	A4	A3	A3	A3
19	$\overline{CS0}$	A0	A6	A5	DI2	$\overline{CS1}$	$\overline{E}$	A2	A2	$\overline{S1}$	A5	A2	A2	A2
20	$\overline{WE}$	A1	A7	A6	DO3	R/$\overline{W}$	$\overline{W}$	A1	A1	$\overline{W}$	A6	A1	A1	A1
21	A4	A2	A8	A7	DO2	A4	A4	A0	A0	A4	A7	A0	A0	A0
22	VDD	VSS	VSS	VCC	VCC	VDD	VCC	VCC	VCC	VCC	VSS	VCC	VCC	VCC

PN22(Cont.)

PN22

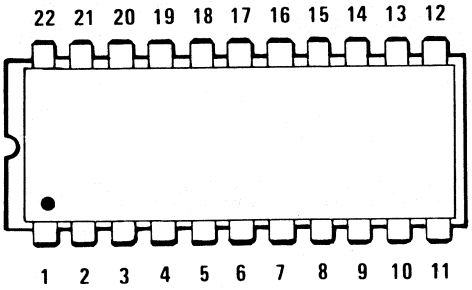

PN22(Cont.)

Pin	as	at	au	av	aw	ax	ay	az	ba	bb	bc	bd	be	bf
1	D7	D8	GND	VGG	A6	A6	NC	D3	D3	VGG	CE	CLR	A0	NC
2	D6	D7	A8	VDD	A5	A5	NC	D7	D7	VDD	VSS	Y0	A1	VDD
3	D5	D6	A7	A6	A4	A4	A4	D6	D6	A6	Dout	D0	A2	E/W
4	D4	D5	A6	A7	A3	A3	A5	D5	D5	A7	A0	D1	A3	D0
5	D3	D4	A5	A8	A2	A2	A6	D4	D4	A8	A5	Y1	A4	D1
6	D2	D3	A4	A9	A1	A1	NC	VSS	VSS	A9	A1	Y2	A5	D2
7	D1	D2	A3	C0	A0	A0	O0	A5	A5	C0	A2	D2	A6	D3
8	D0	D1	VCC	C1	O1	O1	O1	A4	A4	C1	A3	D3	A7	H
9	$\overline{ME}$	D0	A2	VGI	O2	O2	A11	A3	A3	VCC	A4	Y3	CS0	NC
10	WC	OD	A1	D3	O3	O3	A10	A2	A2	D3	VDD	CP	CS1	GND
11	GND	GND	A0	D2	GND	GND	GND	A1	A1	D2	Din	GND	GND	W
12	SC	$\overline{WE}$	OUTINH	D1	O4	O4	A9	A0	A0	D1	WE	Y4	RC	RS
13	MCLK	$\overline{CE}$	NC	D0	O5	O5	A8	CLk	CLk	D0	Ø2	D4	VDD	CE
14	A0	A0	NC	$\overline{WE}$	O6	O6	A7	VGG	VGG	$\overline{WE}$	Ø3	D5	VP	A0
15	A1	A1	OUT8	CE	O7	O7	O2	C1	C1	$\overline{CE}$	NC	Y5	D3	A1
16	A2	A2	OUT7	A0	O8	O8	O3	C2	C2	A0	NC	Y6	D2	A2
17	A3	A3	OUT6	A1	$\overline{E2}$	$\overline{P/E2}$	O4	CS1	CS1	A1	VBB	D6	D1	A3
18	A4	A4	OUT5	A2	$\overline{E1}$	$\overline{E1}$	A0	$\overline{CS2}$	$\overline{CS2}$	A2	NC	D7	D0	A4
19	A5	A5	OUT4	A3	A9	A9	A1	VGI	VCC	A3	NC	Y7	$\overline{E}$	A5
20	A6	A6	OUT3	A4	A8	A8	A2	D0	D0	A4	Ø1	$\overline{OE}$	$\overline{W}$	A6
21	A7	A7	OUT2	A5	A7	A7	A3	D1	D1	A5	Ø4	$\overline{E}$	$\overline{R}$	A7
22	VCC	VCC	out1	VSS	VCC	VCC	VCC	D2	D2	VSS	CS	VCC	VCC	VSS

PN22(Cont.)

PN22

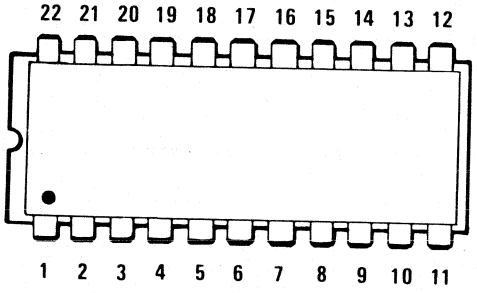

PN22(Cont.)

Pin	bg	bh	bi	bj	bk	bl	bm							
1	A3	A3	A1	A0	VBB	VBB	VBB							
2	A4	A2	A2	I/O0	A9	A9	A1							
3	A5	A1	A3	I/O1	A10	A10	A0							
4	A6	A0	A4	I/O2	A11	A11	DI/DO2							
5	A7	A5	A5	I/O3	$\overline{CS}$	$\overline{CS}$	A9							
6	A8	A6	A6	I/O4	Din	Din	A8							
7	Q0	A7	A7	I/O5	Dout	Dout	A7							
8	Q1	VSS	GND	I/O6	A0	A0	DI/DO3							
9	Q2	DI1	D1	I/O7	A1	A1	$\overline{R}$/W							
10	Q3	DO1	O1	CS1	A2	A2	VCC							
11	GND	DI2	D2	VSS	VCC	VDD	GND							
12	Q4	DO2	O2	R/$\overline{W}$	$\overline{WE}$	R/W	N/C							
13	Q5	DI3	D3	$\overline{OD}$	A3	A3	$\overline{CS}$							
14	Q6	DO3	O3	CS2	A4	A4	A2							
15	Q7	DI4	D4	A7	A5	A5	A5							
16	CI'	DO4	O4	A6	NC	NC	A6							
17	$\overline{E2}$	CE2	CS2	A5	CE	CE	DI/DO4							
18	$\overline{ET}$	OD	$\overline{OE}$	A4	VDD	VGG	DI/DO1							
19	A0	$\overline{CET}$	$\overline{CS1}$	A3	A6	A6	A4							
20	A1	$\overline{WE}$	$\overline{WE}$	A2	A7	A7	A3							
21	A2	A4	A0	A1	A8	A8	N/C							
22	VCC	VCC	VCC	VDD	VSS	VSS	VDD							

24. PIN CONNECTIONS

IN PIN NUMBER SEQUENCE

PN24

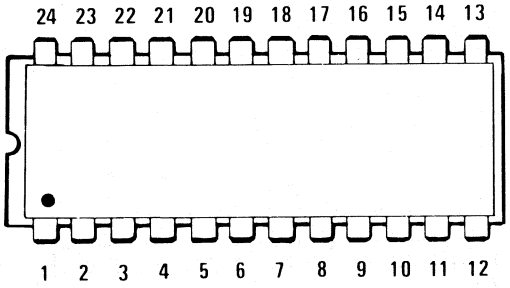

Pin	a	b	c	d	e	f	g	h	i	j③	k	m	n	o
1	1W1	Q3B	NC	VSS	A7	Q3B	A7	A3	AR2	AW2	D8	D8	A7	A7
2	1W0	Q2B	$\overline{CS}$	D0	A6	Q2B	A6	A2	AR1	AW3	D7	D7	A6	A6
3	1GW	3-SA	A0	D1	A5	EA	A5	A1	AR0	AR3	D6	D6	A5	A5
4	1DB	Q0A	NC	D2	A4	Q0A	A4	A0	Q0	AR2	D5	D5	A4	A4
5	2DB	Q1A	NC	D3	A3	Q1A	A3	A5	Q1	AR1	D4	D4	A3	A3
6	CLk	Q2A	A1	D4	A2	Q2A	A2	A6	VCC	AR0	D3	D3	A2	A2
7	1R2	Q3A	A2	D5	A1	Q3A	A1	A7	VEE	Q0	D2	D2	A1	A1
8	1R1	W0	A3	D6	A0	W0	A0	NC	Q2	Q1	D1	D1	A0	A0
9	1R0	W1	A4	D7	DQ1	W1	I/O1	VSS	Q3	VCC	D0	D0	I/O1	I/O1
10	1QB	R1B	A5	E0	DQ2	R0B	I/O2	D0	D3	VCCA	OD	OD	I/O2	I/O2
11	2QB	R0B	Ø	$\overline{E1}$	DQ3	R1B	I/O3	Q0	D2	Q2	$\overline{WE}$	$\overline{WE}$	I/O3	I/O3
12	GND	VSS	VBB	$\overline{E2}$	VSS	VSS	VSS	D1	D1	Q3	GND	GND	GND	VSS
13	2QA	R0A	GND	$\overline{E3}$	DQ4	R0A	I/O4	Q1	D0	D3	$\overline{CE}$	$\overline{CE}$	I/O4	I/O4
14	1QA	R1A	VDD	$\overline{E4}$	DQ5	R1A	I/O5	D2	$\overline{OE1}$	D2	NC	$\overline{L1}$	I/O5	I/O5
15	1GR	WE	A6	$\overline{E5}$	DQ6	WE	I/O6	Q2	$\overline{OE2}$	D1	$\overline{L}$	$\overline{L2}$	I/O6	I/O6
16	2GR	C	NC	R/W	DQ7	CLk	I/O7	D3	$\overline{WE1}$	D0	A0	A0	I/O7	I/O7
17	2W/R0	D3	A7	A6	DQ8	D3	I/O8	Q3	$\overline{WE2}$	$\overline{OE1}$	A1	A1	I/O8	I/O8
18	2W/R1	D2	DB3	A5	$\overline{CS}$	D2	$\overline{WE}$	CS1	VCCA	$\overline{OE2}$	A2	A2	$\overline{CS}$	$\overline{CS}$
19	2W/R2	D1	DB2	A4	A10	D1	NC	$\overline{E0}$	MR	$\overline{WE1}$	A3	A3	A10	L
20	2GW	D0	NC	A3	$\overline{OE}$	D0	$\overline{CE}$	$\overline{CS0}$	AW0	$\overline{WE2}$	A4	A4	$\overline{OE}$	$\overline{OE}$
21	2DA	3-SB	DB1	A2	$\overline{W}$	EB	NC	NC	AW1	VEE	A5	A5	$\overline{WE}$	$\overline{WE}$
22	1DA	Q0B	DB0	A1	A9	Q0B	A9	$\overline{WE}$	AW2	MR	A6	A6	A9	A9
23	1W2	Q1B	R/W	A0	A8	Q1B	A8	A4	AW3	AW0	A7	A7	A8	A8
24	VCC	VDD	VCC	VCC	VCC	VDD	VCC	VDD	AR3	AW1	VCC	VCC	VCC	VCC

PN24(Cont.)

PN24

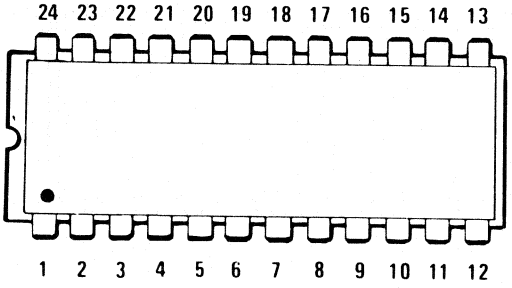

PN24(Cont.)

Pin	p	q	r	s	t	u	v	w	x	y	z	aa	ab	ac
1	A7	A7	A7	A7	A7	A7	A6	A3	A3	VSS	VSS	VSS	VSS	A6
2	A6	A6	A6	A8	A6	A6	NC	A2	A2	VGG	VGG	VGG	VGG	A5
3	A5	A5	A5	A9	A5	A5	NC	A1	A1	A5	A5	A5	A5	A4
4	A4	A4	A4	A10	A4	A4	NC	B1	B1	A4	A4	A4	A4	A3
5	A3	A3	A3	A0	A3	A3	A5	B2	B2	A3	A3	A3	A3	A2
6	A2	A2	A2	A1	A2	A2	A4	B3	B3	A2	A2	A2	A2	A1
7	A1	A1	A1	A2	A1	A1	A3	B4	B4	A1	A1	A1	A1	A0
8	A0	A0	A0	A3	A0	A0	A2	B5	B5	O1	NC	NC	NC	$\overline{O8}$
9	O1	O1	O0	A4	D0	O1	A1	B6	B6	O2	NC	NC	NC	$\overline{O7}$
10	O2	O2	O1	A5	D1	O2	B1	B7	B7	O3	NC	NC	NC	$\overline{O6}$
11	O3	O3	O2	A6	D2	O3	NC	B8	B8	O4	O1	O1	O1	$\overline{O5}$
12	GND	GND	GND	GND	GND	GND	GND	VSS	VCC	O5	O2	O2	O2	GND
13	O4	O4	O3	E2	D3	O4	B2	A9	A9	O6	O3	O3	O3	$\overline{O4}$
14	O5	O5	O4	E1	D4	O5	B2	CI	CE	O7	O4	O4	O4	$\overline{O3}$
15	O6	O6	O5	E0	D5	O6	B4	CM	MC	O8	O5	O5	O5	$\overline{O2}$
16	O7	O7	O6	D7	D6	O7	B5	VGG	VGG	O9	O5	NC	NC	$\overline{O1}$
17	O8	O8	O7	D6	D7	O8	B6	A8	A8	O10	NC	NC	NC	$\overline{CS}$
18	CS2	A11	PD/PGM	D5	E1	A11	B7	A7	A7	INH	INH	INH	A12	CS
19	A10	A10	A10	D4	A10	A10	B8	A6	A6	NC	A11	A11	A11	CS
20	CS1	PD/$\overline{PGM}$	$\overline{CS}$	D3	E0	CS1	CI1	A5	A5	NC	A10	A9	A10	$\overline{HS}$
21	CS3	VPP	VPP	D2	E2	CS2	CI2	A4	A4	A9	A9	A1	A9	HS
22	A9	A9	A9	D1	A9	A9	NC	NC	NC	A8	A8	A8	A8	A8
23	A8	A8	A8	D0	A8	A8	A0	NC	NC	A7	A7	A7	A7	A7
24	VCC	VCC	VCC	VCC	VCC	VCC	VCC	VDD	VGI	A6	A6	A6	A6	VCC

PN24(Cont.)

24. PIN CONNECTIONS

IN PIN NUMBER SEQUENCE

PN 24

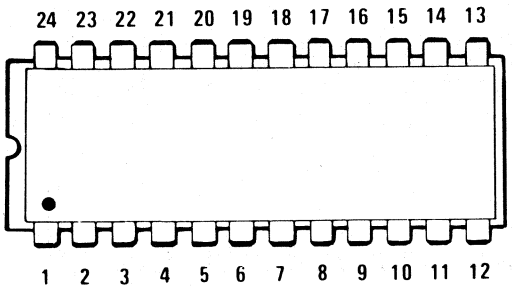

PN24(Cont.)

Pin	ad	ae	af	ag	ah	ai	aj	ak	am	an	ao	ap	aq	ar
1	A7	A7	A7	A7	CS	A7	ADH	A2	A7	A7	A7	A7	A7	A7
2	A6	A6	A6	A6	A0	A6	ADG	A1	A6	A6	A6	A6	A6	A6
3	A5	A5	A5	A5	A1	A5	ADF	A0	A5	A5	A5	A5	A5	A5
4	A4	A4	A4	A4	A2	A4	ADE	O1	A4	A4	A4	A4	A4	A4
5	A3	A3	A3	A3	SA	A3	ADD	O2	A3	A3	A3	A3	A3	A3
6	A2	A2	A2	A2	A3	A2	ADC	O3	A2	A2	A2	A2	A2	A2
7	A1	A1	A1	A1	A4	A1	ADB	O4	A1	A1	A1	A1	A1	A1
8	A0	A0	A0	A0	A5	A0	ADA	O5	A0	A0	A0	A0	A0	A0
9	O1	BUS0	BUS0	O1	A6	O1	DO1	O6	DO1	O1	O1	O1	O1	O1
10	O2	BUS1	BUS1	O2	A7	O2	DO2	O7	DO2	O2	O2	O2	O2	O2
11	O3	BUS2	BUS2	O3	Ø	O3	DO1	O8	DO3	O3	O3	O3	O3	O3
12	GND	VSS	VSS	VSS	VBB	VSS	GND	VCC	VSS	GND	GND	GND	GND	VSS
13	O4	BUS3	BUS3	O4	VSS	O4	DO4	PRD	DO4	O4	O4	O4	O4	O4
14	O5	BUS4	BUS4	O5	VDD	O5	DO5	CS	DO5	O5	O5	O5	O5	O5
15	O6	BUS5	BUS5	O6	MS	O6	DO6	VBB	DO6	O6	O6	O6	O6	O6
16	O7	BUS6	BUS6	O7	O7	O7	DO7	VGG	DO7	O7	O7	O7	O7	O7
17	O8	BUS7	BUS7	O8	O6	O8	DO8	A7	DO8	O8	O8	O8	O8	O8
18	CS4	CE0	NC	NC	O5	$\overline{CS2}$/CS2	S4	A6	PROG	CS4	CS4	E4	E4	CS2/CS2
19	CS3	$\overline{MRD}$	NC	NC	O4	VDD	S3	A5	VDD	CS3	CS3	E3	E3	VDD
20	$\overline{CS2}$	CS2	CS	CS	O3	$\overline{CS1}$	S2	A4	$\overline{CSWE}$	$\overline{CS2}$	$\overline{CS2}$	$\overline{E2}$	E2	$\overline{CS1}$
21	$\overline{CS1}$	CS1	NC	NC	O2	VBB	S1	A3	VBB	$\overline{CS1}$	$\overline{CS1}$	$\overline{E1}$	E1	VBB
22	VCC2	NC	NC	NC	O1	A9	NC	VCC	A9	NC	A9	MFR	A9	A9
23	A8	Clk	A8	A8	O0	A8	ADI	VCC	A8	A8	A8	A8	A8	A8
24	VCC1	VDD	VDD	VDD	VCC	VCC	VCC	VDD	VCC	VCC	VCC	VCC	VCC	VCC

PN24(Cont.)

PN24

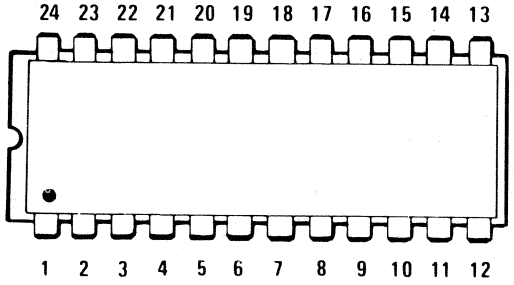

PN24(Cont.)

Pin	as	at	au	av	aw	ax	ay	az	ba	bb	bc	bd	be	bf
1	A7	A7	A7	A7	A7	A7	A2	A2	GND	VCC	A7	A7	GND	A3
2	A6	A6	A8	A6	A6	A6	A1	A1	A8	A/CSL	A6	A6	Dout0	A4
3	A5	A5	A9	A5	A5	A5	A0	A0	A7	NC	A5	A5	Dout1	NC
4	A4	A4	A10	A4	A4	A4	Dout1	Dout1	A6	A0	A4	A4	Dout2	A5
5	A3	A3	A0	A3	A3	A3	Dout2	Dout2	A5	A1	A3	A3	Dout3	A6
6	A2	A2	A1	A2	A2	ST	Dout3	Dout3	A4	A2	A2	A2	Dout4	A7
7	A1	A1	A2	A1	A1	01	Dout4	Dout4	A3	A3	A1	A1	Dout5	O1
8	A0	A0	A3	A0	A0	02	Dout5	Dout5	NC	A4	A0	A0	Dout6	O2
9	O1	O1	A4	D0	O1	03	Dout6	Dout6	VCC	A5	O1	O1	Dout7	O3
10	O2	O2	A5	D1	O2	04	Dout7	Dout7	A2	A6	O2	O2	CS0	O4
11	O3	O3	A6	D2	O3	$\overline{EN}$	Dout8	Dout8	A1	A7	O3	O3	CS1	FE2
12	VSS	GND	GND	GND	GND	GND	VCC	VCC	A0	A8	VSS	VSS	VCC	GND
13	O4	O4	CS3	D3	O4	A0	PROG	NC	OUTINH	A9	O4	O4	CS2	FE1
14	O5	O5	CS2	D4	O5	A1	$\overline{CS}$	$\overline{CS}$	OUT10	A10	O5	O5	CS3	O5
15	O6	O6	CS1	D5	O6	A2	VBB	VCC	OUT9	NC	O6	O6	A9	O6
16	O7	O7	O8	D6	O7	$\overline{CE}$	VGG	VDD	OUT8	OUT4	O7	O7	A8	O7
17	O8	O8	O7	D7	O8	A10	A7	A7	OUT7	OUT3	O8	O8	A7	O8
18	PS	CS2/$\overline{CS2}$	O6	CS2	CS4	05	A6	A6	OUT6	OUT2	CS2/$\overline{CS2}$	CS2/$\overline{CS2}$	A6	STR
19	VDD	VDD	O5	A10	CS3	06	A5	A5	OUT5	OUT1	VDD	NC	A5	CE2
20	$\overline{CS}$/WE	$\overline{CS1}$	O4	CS1	CS2	07	A4	A4	OUT4	A11	CS1/$\overline{CS}$	$\overline{CS1}$	A4	$\overline{CE1}$
21	VBB	VBB	O3	CS3	CS1	08	A3	A3	OUT3	CS3	NC	NC	A3	A0
22	A9	VSS	O2	A9	VCC2	A9	VCC	PROG	OUT2	CS2	A9	A9	A2	A1
23	A8	A8	O1	A8	A8	A8	VCC	VBB	OUT1	CS1	A8	A8	A1	A2
24	VCC	VCC	VCC	VCC	VCCI	VCC	VDD	VDD	NC	GND	VCC	VCC	A0	VCC

PN24(Cont.)

24. PIN CONNECTIONS

IN PIN NUMBER SEQUENCE

PN24

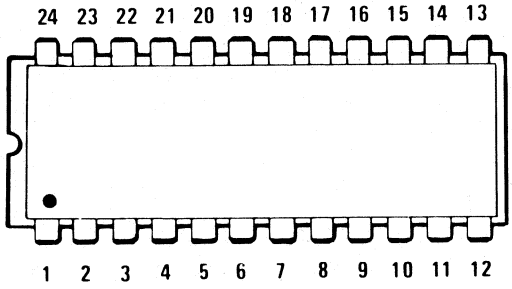

PN24(Cont.)

Pin	bg	bh	bi	bj	bk	bm	bn	bo	bp	bq	br	bs	bt	bu
1	A3	A3	A3	VSS	Ø	A7	B6	NC	A2	$\overline{CS1}$	A7	A7	A7	A7
2	A4	A4	A4	A4	GND	A6	B7	NC	A1	A0	A6	A6	A6	A6
3	A5	NC	A5	A3	X1	A5	NC	NC	NC	A1	A5	A5	A5	A5
4	A6	A5	A6	A2	X2	A4	B8	A8	B8	A2	A4	A4	A4	A4
5	A7	A6	A7	NC		A3	CS	A7	B7	A3	A3	A3	A3	A3
6	A8	A7	A8	NC		A2	NC	A6	B6	A4	A2	A2	A2	A2
7	O1	O1	O1	MC1	X4	A1	A7	A5	B5	A5	A1	A1	A1	A1
8	O2	O2	O2	MC2	X8	A0	A6	A4	B4	A6	A0	A0	A0	A0
9	O3	O3	O3	CA	X16	Dout0	A5	A3	B3	A7	Q1	Q1	Q1	Q1
10	O4	O4	O4	A1	X32	Dout1	NC	A2	B2	$\overline{CS2}$	Q2	Q2	Q2	Q2
11	FE2	NC	NC	A0		Dout2	NC	A1	B1	NC	Q3	Q3	Q3	Q3
12	GND	GND	GND	GND	VDD	VSS	GND	GND	GND	VSS	VSS	VSS	VSS	VSS
13	FE1	NC	NC	VDD	O8	Dout3	A4	B1	CS2	VSS	Q4	Q4	Q4	Q4
14	O5	O5	O5	Din1	O7	Dout4	A3	B2	CS1	VDD	Q5	Q5	Q5	Q5
15	O6	O6	O6	Din2	O6	Dout5	A2	B3	A9	NC	Q6	Q6	Q6	Q6
16	O7	O7	O7	Din3	O5	Dout6	A1	B4	A8	D7	Q7	Q7	Q7	Q7
17	O8	O8	O8	Din4	O4	Dout7	B1	B5	A7	D6	Q8	Q8	Q8	Q8
18	STR	STR	STR	Dout4	O3	PROG	B2	B6	A6	D5	PROG	A11	PD/PGM	A11
19	CE2	CE2	CE2	Dout3	O2	VDD	B3	B7	A5	D4	YDD	A10	A10	A10
20	$\overline{CE1}$	$\overline{CE1}$	$\overline{CE1}$	NC	O1	CS/WE	B4	B8	A4	D3	$\overline{CS}$(PE)	$\overline{CS1}$/CS1	$\overline{CS}$	PD/$\overline{PGM}$
21	A0	A0	A0	Dout2	CE	VBB	B5	CS	A3	D2	VBB	CS2/$\overline{CS2}$	VPP	VPP
22	A1	A1	A1	Dout1	Y4	A9	VDD	VDD	VDD	D1	A9	A9	A9	A9
23	A2	A2	A2	A5	Y2	A8	VGG	VGG	VGG	D0	A8	A8	A8	A8
24	VCC	VCC	VCC	VCC	Y1	VCC	NC	NC	NC	VCC	VCC	VCC	VCC	VCC

PN24(Cont.)

PN24

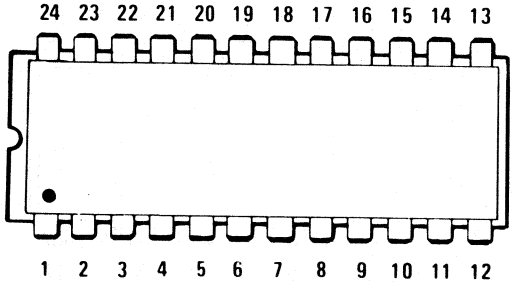

PN24(Cont.)

Pin	bv	bw	bx	by	bz	ca	cb	cc	cd	ce	cf	cg	ch	ci
1	A7	GND	A7	A2	InA3	A3	A3	VCC	VSS	Clk1	Clk1	Clk1	A7	GND
2	A6	A8	A6	A1	InA3	A2	A2	Ø	DI/O1	VSS	VSS	VSS	A6	D0
3	A5	A7	A5	A0	InA1	A1	A1	Ø2	DI/O2	ST	NC	ST	A5	D1
4	A4	A6	A4	Dout1	OUTB1	NC	B1	A0	$\overline{CS}$	VEE	VEE	VEE	A4	D2
5	A3	A5	A3	Dout2	OUTB2	B1	B2	A1	NC	D4	D4	D4	A3	D3
6	A2	A4	A2	Dout3	OUTB3	NC	B3	A2	VDD	D3	D3	D3	A2	D4
7	A1	A3	A1	Dout4	OUTB4	B2	B4	A3	R1	D2	D2	D2	A1	D5
8	A0	A10	A0	Dout5	OUTB5	NC	B5	A4	R2	D1	D1	D1	A0	D6
9		VCC	O1	Dout6	OUTB6	B3	B6	A5	R3	$\overline{W}$	$\overline{W}$	$\overline{W}$	O1	D7
10	O2	A2	O2	Dout7	OUTB7	NC	B7	A6	R4	VR	VR	VR	O2	E0
11	O3	A1	O3	Dout8	OUTB8	B4	B8	A7	A0	A0	A0	A0	O3	E1
12	VSS	A0	GND	VCC	VCC	VCC	VCC	A8	A1	A1	A1	A1	GND	VCC
13	O4	OUTINH	O4	NC	NC	A9	NC	A9	A2	A2	A2	A2	O4	E2
14	O5	O10	O5	CE/$\overline{CE}$	NC	CE	CE	A10	A3	A3	A3	A3	O5	A10
15	O6	O9	O6	NC	CE	NC	NC	VGG	A4	A4	A4	A4	O6	A9
16	O7	O8	O7	VGG	NC	VGG	VGG	OUT4	R8	A5	A5	A5	O7	A8
17	O8	O7	O8	A7	VGG	A8	A8	OUT3	R7	A6	A6	A6	O8	A7
18	PROG	O6	A11	A8	inA7	A7	A7	OUT2	R6	A7	A7	A7	NC	A6
19	VDD	O5	A10	A5	inA6	A6	AG	OUT1	R5	A8	A8	A8	NC	A5
20	$\overline{CS}$/WE	O4	CS1	A4	inA5	A5	A5	CS4	Clk1	A9	A9	A9	$\overline{E}$	A4
21	VBB	O3	A12	A3	inA4	A4	A4	CS3	Clk2	CS2	CS2	A10	NC	A3
22	A9	O2	A9	VCC	NC	NC	NC	CS2	W	CS1	CS1	CS	A9	A2
23	A8	O1	A8	VCC	NC	NC	NC	CS1	DI/O3	VM	VM	VM	A8	A1
24	VCC	A9	VCC	VDD	VG1	VGI	VGI	NC	DI/O4	VDD	VDD	VDD	VCC	A0

PN24(Cont.)

PN24

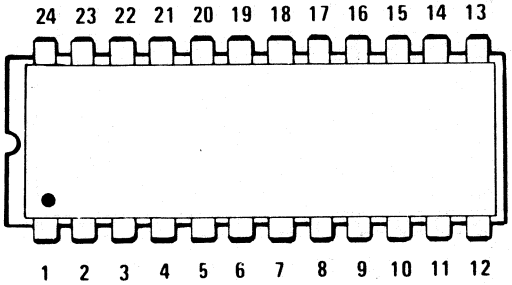

PN24(cont.)

Pin	cj	ck	cm	cn	co	cp	cq	cr	cs	ct	cu	cv	cw	cx
1	GND	GND	VCC	A7	A7	A7	A7	A7	A7	A7	CS	A7	A2	A3
2	A0	D0	R/W	A6	A6	A6	A6	A6	A6	A6	Z0	A6	A1	A2
3	A1	D1	$\overline{CS}$	A5	A5	A5	A5	A5	A5	A5	Z1	A5	A0	A1
4	A2	D2	VPROG	A4	A4	A4	A4	A4	A4	A4	Z2	A4	Dout1	B1
5	A3	D3	A0	A3	A3	A3	A3	A3	A3	A3	Z3	A3	Dout2	B2
6	A4	D4	A1	A2	A2	A2	A2	A2	A2	A2	Y0	A2	Dout3	B3
7	A5	D5	A2	A1	A1	A1	A1	A1	A1	A1	Y1	A1	Dout4	B4
8	A9	D6	A3	A0	A0	A0	A0	O1	A0	A0	X0	A0	Dout5	B5
9	VCC	D7	A4	D0	D0	O1	O1		O1	O1	X1	O1	Dout6	B6
10	A8	VGG	A5	D1	D1	O2	O2	O2	O2	O2	X2	O2	Dout7	B7
11	A7	VPROG	A6	D2	D2	O3	O3	O3	O3	O3	X3	O3	Dout8	B8
12	A6	VCC	VCC	GND	GND	VSS	GND	GND	VSS	GND	⑩	VSS	VCC	VSS
13	E2	VCC	A7	D3	D3	O4	O4	O4	O4	O4	GND	O4	VCC	A9
14	E1	R/W	A8	D4	D4	O5	O5	O5	O5	O5	X4	O5	$\overline{CS}$	$\overline{CS}$
15	A10	CS	D0	D5	D5	O6	O6	O6	O6	O6	X5	O6	VCC	MC
16	D7	A8	D1	D6	D6	O7	O7	O7	O7	O7	X6	O7	VGG	VDD
17	D6	A7	D2	D7	D7	O8	O8	O8	O8	O8	X7	O8	A7	A8
18	D5	A6	D3	PROG	PROG	CS2/$\overline{CS2}$	A11	⑧	$\overline{CS}$(PR)	$\overline{CE2}$	Y2	PROG	A6	A7
19	D4	A5	D4	VDD	VDD	NC	A10	A10	VDD	NC	Y3	VDD	A5	A6
20	D3	A4	D5	$\overline{CS}$/WE	$\overline{CS}$/WE	CS1/$\overline{CS1}$	$\overline{CE}$	⑦	A10	$\overline{CE1}$	Z4	$\overline{CS}$/WE	A4	A5
21	D2	A3	D6	VBB	VBB	NC	A12	⑨	VBB	NC	Z5	VSS	A3	A4
22	D1	A2	D7	VSS	A9	A9	A9	A9	A9	A9	Z6	A9	VCC	VSS
23	D0	A1	VGG	A8	A8	A8	A8	A8	A8	A8	Z7	A8	VCC	VSS
24	E0	A0	GND	VCC	VCC	VCC	VCC	VCC	VCC	VCC	R	VCC	VDD	VLL

PN24(Cont.)

PN24

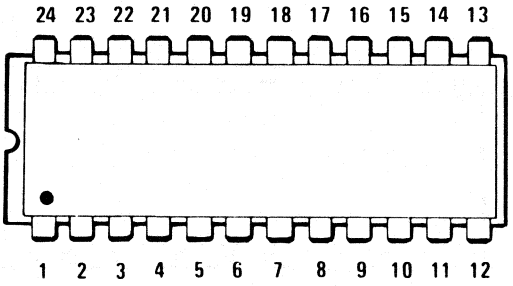

PN24(Cont.)

Pin	cy	cz	da	db	dc	dd	de	df	dg	dh	di	dj	dk	dm
1	VSS	O6	VGG(NC)	GND	A7	A7	A7	A7	A7	A7	A7	A7	A7	A7
2	PRS	O7	CS2	A0	A6	A6	A6	A8	A6	A6	A6	A6	A6	A6
3	$\overline{CS}$	O8	CS3	A1	A5	A5	A5	A9	A5	A5	A5	A5	A5	A5
4	VSS	GND	O1	A2	A4	A4	A4	A10	A4	A4	A4	A4	A4	A4
5	A0	A1	O2	A3	A3	A3	A3	A0	A3	A3	A3	A3	A3	A3
6	A1	A2	O3	A4	A2	A2	A2	A1	A2	A2	A2	A2	A2	A2
7	A2	A3	O4	A5	A1	A1	A1	A2	A1	A1	A1	A1	A1	A1
8	A3	OE1/$\overline{OE1}$	O5	A9	A0	A0	A0	A3	A0	A0	A0	A0	A0	A0
9	A4	OE2/$\overline{OE2}$	O6	VCC	Dout0	Dout0	Dout0	A4	Dout0	O0	O0	O0	O0	O0
10	A5	A4	O7	A8	Dout1	Dout1	Dout1	A5	Dout1	O1	O1	O1	O1	O1
11	A6	A5	O8	A7	Dout2	Dout2	Dout2	A6	Dout2	O2	O2	O2	O2	O2
12	VSS	VGG(NC)	GND	A6	VSS	VSS	VSS	VSS	GND	VSS	VSS	VSS	GND	GND
13	A7	A6	A8	AR	Dout3	Dout3	Dout3	CS3/$\overline{CS3}$	Dout3	O3	O3	O3	O3	O3
14	A8	A7	A7	OE2/$\overline{OE2}$	Dout4	Dout4	Dout4	CS2/$\overline{CS2}$	Dout4	O4	O4	O4	O4	O4
15	B0	A8	A6	A10	Dout5	Dout5	Dout5	CS1/$\overline{CS1}$	Dout5	O5	O5	O5	O5	O5
16	B1	A9	A5	O7	Dout6	Dout6	Dout6	D7	Dout6	O6	O6	O6	O6	O6
17	B2	NC	A4	O6	Dout7	Dout7	Dout7	D6	Dout7	O7	O7	O7	O7	O7
18	B3	$\overline{AR}$	A3	O5	PROG	$\overline{CS}$(PR)	YDD	D5	CS2/$\overline{CS2}$	VSS	PROG	PROG	$\overline{CE}$	$\overline{CE}$
19	B4	O1	A2	O4	VDD	VDD	A10	D4	A10	VDD	VDD	VDD	A10	AR
20	B5	O2	A1	O3	$\overline{CS}$/WE	A10	$\overline{CS}$(PR)	D3	CS1/$\overline{CS1}$	$\overline{CS}$	$\overline{CS}$/WE	$\overline{CS}$/WE	$\overline{OE}$	$\overline{OE}$
21	B6	O3	A0	O2	VBB	VBB	VBB	D2	CS3/$\overline{CS3}$	VBB	VBB	VBB	VPP	VPP
22	B7	O4	CS0	O1	A9	A9	A9	D1	A9	A9	A9	VSS	A9	A9
23	VDD	O5	CS1	O0	A8	A8	A8	D0	A8	A8	A8	A8	A8	A8
24	VLL	VCC	VCC	OE1/$\overline{OE1}$	VCC	VCC	VCC	VCC	VCC	VCC	VCC	VCC	VCC	VCC

PN24(Cont.)

PN24

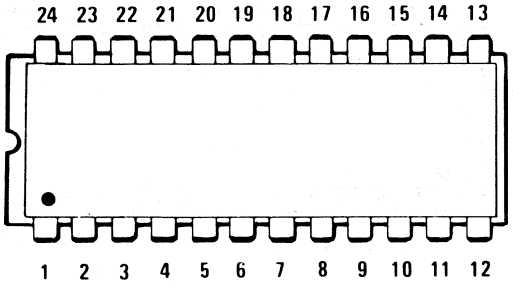

PN24(Cont.)

Pin	dn	do⑪	dp	dq	dr	ds	dt	du⑫	dv⑫	dw⑫	dx⑫	dy⑫	dz⑫	ea
1	A7	A7	A7	A7	A7	A7	A7	A7	A7	A7	A7	A7	A7	A7
2	A6	A6	A6	A6	A6	A6	A6	A6	A6	A6	A6	A6	A6	A6
3	A5	A5	A5	A5	A5	A5	A5	A5	A5	A5	A5	A5	A5	A5
4	A4	A4	A4	A4	A4	A4	A4	A4	A4	A4	A4	A4	A4	A4
5	A3	A3	A3	A3	A3	A3	A3	A3	A3	A3	A3	A3	A3	A3
6	A2	A2	A2	A2	A2	A2	A2	A2	A2	A2	A2	A2	A2	A2
7	A1	A1	A1	A1	A1	A1	A1	A1	A1	A1	A1	A1	A1	A1
8	A0	A0	A0	A0	A0	A0	A0	A0	A0	A0	A0	A0	A0	A0
9	O0	O1	O1	O1	O1	O1	O1	O1	O1	O1	O1	O1	O1	O1
10	O1	O2	O2	O2	O2	O2	O2	O2	O2	O1	O2	O2	O2	O2
11	O2	O3	O3	O3	O3	O3	O3	O3	O3	O3	O3	O3	O3	O3
12	GND	GND	GND	GND	GND	GND	GND	GND	GND	GND	GND	GND	GND	GND
13	O3	O4	O4	O4	O4	O4	O4	O4	O4	O4	O4	O4	O4	O4
14	O4	O5	O5	O5	O5	O5	O5	O5	O5	O5	O5	O5	O5	O5
15	O5	O6	O6	O6	O6	O6	O6	O6	O6	O6	O6	O6	O6	O6
16	O6	O7	O7	O7	O7	O7	O7	O7	O7	O7	O7	O7	O7	O7
17	O7	O8	O8	O8	O8	O8	O8	O8	O8	O8	O8	O8	O8	O8
18	$\overline{CE}$	CS2	CE4	CE4	CE3	$\overline{CE3}$/CE3	NC	CS4	CS4/PS4	CS4	CS4/PS4	NC	NC	E4
19	A10	A10	CE3	CE3	CE2	$\overline{CE2}$/CE2	NC	CS3	CS3/PS3	CS3	CS3/PS3	NC	NC	E3
20	$\overline{OE}$	CS1	$\overline{CE2}$	$\overline{CE2}$	$\overline{CE1}$	$\overline{CE1}$/CE1	$\overline{CE}$	$\overline{CS2}$	$\overline{CS2}$/PS2	$\overline{CS2}$	$\overline{CS2}$/PS2	$\overline{CS}$	$\overline{CS}$/$\overline{PS}$	$\overline{E2}$
21	A11	CS3	$\overline{CE1}$	$\overline{CE1}$	A10	A10	NC	$\overline{CS1}$	$\overline{CS1}$/PS1	$\overline{CS1}$	$\overline{CS1}$/PS1	NC	NC	$\overline{E1}$
22	A9	A9	NC	A9	A9	A9	A9	NC	NC	A9	A9	A9	A9	NC
23	A8	A8	A8	A8	A8	A8	A8	A8	A8	A8	A8	A8	A8	A8
24	VCC	VCC	VCC	VCC	VCC	VCC	VCC	VCC	VCC	VCC	VCC	VCC	VCC	VCC

PN24(Cont.)

PN24

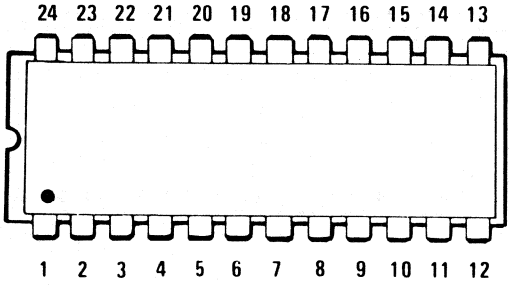

PN24(Cont.)

Pin	eb	ec	ed	ee	ef	eg	eh	ei	ej	ek	em	en⑬	eo⑭	ep
1	A7	A7	A7	A7	A7	A7	A7	A7	A7	MA7	MA7	A7	A7	GND
2	A6	A6	A6	A6	A6	A6	A6	A6	A6	MA6	MA6	A6	A6	O1
3	A5	A5	A5	A5	A5	A5	A5	A5	A5	MA5	MA5	A5	A5	O2
4	A4	A4	A4	A4	A4	A4	A4	A4	A4	MA4	MA4	A4	A4	O3
5	A3	A3	A3	A3	A3	A3	A3	A3	A3	MA3	MA3	A3	A3	O4
6	A2	A2	A2	A2	A2	A2	A2	A2	A2	MA2	MA2	A2	A2	O5
7	A1	A1	A1	A1	A1	A1	A1	A1	A1	MA1	MA1	A1	A1	O6
8	A0	A0	A0	A0	A0	A0	A0	A0	A0	MA0	MA0	A0	A0	O7
9	O1	O1	O1	O1	O1	O1	O1	O1	O1	BUS0	BUS0	O1	O1	O8
10	O2	O2	O2	O2	O2	O2	O2	O2	O2	BUS1	BUS1	O2	O2	CS0
11	O3	O3	O3	O3	O3	O3	O3	O3	O3	BUS2	BUS2	O3	O3	CS1
12	GND	GND	GND	GND	GND	GND	GND	GND	GND	VSS	VSS	GND	GND	VCC
13	O4	O4	O4	O4	O4	O4	O4	O4	O4	BUS3	BUSS3	O4	O4	CS2
14	O5	O5	O5	O5	O5	O5	O5	O5	O5	BUS4	BUS4	O5	O5	A10
15	O6	O6	O6	O6	O6	O6	O6	O6	O6	BUS5	BUS5	O6	O6	A9
16	O7	O7	O7	O7	O7	O7	O7	O7	O7	BUS6	BUS6	O7	O7	A8
17	O8	O8	O8	O8	O8	O8	O8	O8	O8	BUS7	BUS7	O8	O8	A7
18	E4	NC	E4	NC	E3	O9	E4	E4	O9	CE0	CS2	A11	A11	A6
19	E3	NC	E3	NC	E2	O10	E3	E3	E3	$\overline{MRD}$	NC	A10	A10	A5
20	P/$\overline{E2}$	$\overline{E2}$	P/$\overline{E2}$	P/$\overline{E2}$	$\overline{E1}$	$\overline{E2}$	$\overline{E2}$	P/$\overline{E2}$	$\overline{E2}$	CS2	CS1	CS1	CS	A4
21	$\overline{E1}$	NC	$\overline{E1}$	NC	A10	$\overline{E1}$	$\overline{E1}$	$\overline{E1}$	$\overline{E1}$	CS1	NC	CS2	A12	A3
22	NC	A9	A9	A9	A9	A9	NC	NC	A9	CEI	MA9	A9	A9	A2
23	A8	A8	A8	A8	A8	A8	NC	NC	A8	MUX	MA8	A8	A8	A1
24	VCC	VCC	VCC	VCC	VCC	VCC	VCC	VCC	VCC	VDD	VDD	VCC	VCC	A0

PN24(Cont.)

24. PIN CONNECTIONS

IN PIN NUMBER SEQUENCE

PN24

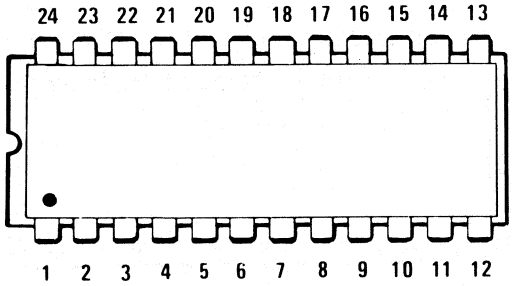

PN24(Cont.)

Pin	eq	er	es	et	eu	ev	ew	ex⑰	ey	ez	fa	fb	fc	fd
1	GND	GND	A7	O6	A7	A7	A7	A7	A7	A7	$\overline{CS}$	$\overline{CS}$	$\overline{CS}$	A7
2	O1	O1	A6	O7	A6	A6	A6	A6	A6	A6	A0	A0	A0	A6
3	NC	O2	A5	O8	A5	A5	A5	A5	A5	A5	A1	A1	A1	A5
4	O2	O3	A4	O9	A4	A4	A4	A4	A4	A4	A2	A2	A2	A4
5	NC	O4	A3	VDD	A3	A3	A3	A3	A3	A3	A3	SA	A3	A3
6	O3	O6	A2	A4	A2	A2	A2	A2	A2	A2	A4	A3	A4	A2
7	NC	O6	A1	A3	A1	A1	A1	A1	A1	A1	A5	A4	A5	A1
8	O4	O7	A0	A2	A0	A0	A0	A0	A0	A0	A6	A5	A6	AØ
9	NC	O8	O1	A1	O1	O1	O1	O1	O1	O0	A7	A6	A7	OØ
10	CS0	CS1	O2	OE	O1	O2	O2	O2	O2	O1	PG	A7	A8	O2
11	CS1	CS2	O3	A5	O2	O3	O3	O3	O3	O2	VCL	Ø	A9	O3
12	VCC	VCC	GND	VGG	VSS	VSS	GND	GND	GND	VSS	VBB	VBB	VBB	VSS
13	A11	CS3	O4	A6	O2	O4	O4	O4	O4	O3	VSS	VSS	VSS	O3
14	A10	CS4	O5	A7	O3	O5	O5	O5	O5	O4	VDD	VDD	VDD	O4
15	A9	A9	O6	A8	O3	O6	O6	O6	O6	O5	VGG	4/8	O7	O5
16	A8	A8	O7	A9	O4	O7	O7	O7	O7	O6	DI/O7	O7	O6	O6
17	A7	A7	O8	A10	O4	O8	O8	O8	O8	O7	DI/O6	O6	O5	O7
18	A6	A6	E4	R	PROG	PROG	NC	CS3/PS3	A11	VSS	DI/O5	O5	O4	VER
19	A5	A5	E3	O1	VDD	VDD	A10	CS2/PS2	A10	VDD	DI/O4	O4	O3	VPG
20	A4	A4	$\overline{E2}$	O2	STR	STR	$\overline{CE}$	$\overline{CS1}$/PS1	$\overline{CS}$	$\overline{CS}$	DI/O3	O3	O2	$\overline{CS}$
21	A3	A3	$\overline{E1}$	O3	$\overline{CS}$	$\overline{CS}$	NC	A10	A12	VBB	DI/O2	O2	O1	VBB
22	A2	A2	A9	O4	A9	CE	A9	A9	A9	A9	DI/O1	O1	O0	A9
23	A1	A1	A8	O5	A8	A8	A8	A8	A8	A8	DI/O0	O0	$\overline{RE}$	A8
24	A0	A0	VCC	VCC	VCC	VCC	VCC	VCC	VCC	VCC	VCC	VCC	VCC	VCC

PN24(Cont.)

PN24

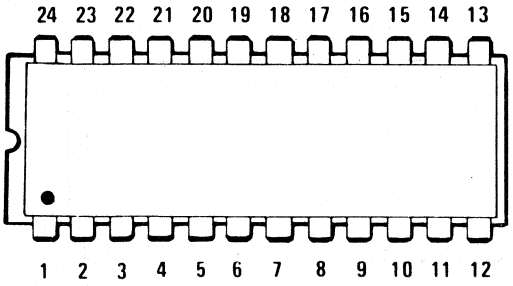

PN24(Cont.)

Pin	fe	ff	fg	fh	fi	fj	fk	fm	fn	fo	fp	fq	fr	fs
1	A7	A7	R1	L1	S0	S0	VGG	NC	OUTINH	A1	VCC	VBB	A7	CS3
2	A6	A6	R2	L2	B7	B7	0C	NC	NC	A2	Cout	VDD	A6	VCC
3	A5	A5	NC	L0	B6	B6	CE	NC	O8	A3	OB1	VGG	A5	CS4
4	A4	A4	R3	NC	B5	B5	$\overline{TC}$	O1	O7	A4	OB2	A7	A4	A6
5	A3	A3	A4	NC	B4	B4	$\overline{O1}$	O2	O6	A5	OB3	B2	A3	Dout5
6	A2	A2	A5	NC	B3	O2	$\overline{O3}$	O5	A6	OB4	B4	A2	A2	Dout3
7	A1	A1	I	B1	B2	B2	$\overline{O3}$	O4	O4	C/CLk	OB5	B6	A1	Dout1
8	A0	A0	DCout	B2	B1	B1	$\overline{O4}$	O5	O3	C/R	OB6	A6	A0	A5
9	O1	O1	NC	B3	O1	O1	$\overline{O5}$	NC	O2	NC	OB7	A5	O1	A4
10	O2	O2	CE	B4	O2	O2	$\overline{O6}$	GND	O1	C/C	OB8	NC	O2	CS1
11	O3	O3	B1	B5	O3	O3	$\overline{O7}$	OUTINH	GND	C/O	OB9	A4	O3	A3
12	GND	GND	GND	VSS	GND	GND	VDD	NC	NC	VDD	VGI	A3	VSS	A2
13	O4	O4	B2	NC	O4	O4	A1	NC	NC	O7	OE1	VSS	O4	VSS
14	O5	O5	B3	CE	O5	O5	A2	A1	A1	O6	OE2	NC	O5	CS2
15	O6	O6	NC	VGG	O6	O6	A4	A2	A2	O5	FRC	A1	O6	A0
16	O7	O7	NC	A0	O7	O7	A8	A3	A3	O4	C/R	A2	O7	A1
17	O8	O8	B4	A1	NC	O8	A16	A4	A4	O3	C/CLk	B7	O8	Dout0
18	A11	CS2/$\overline{CS2}$	B5	A2	NC	O9	A32	A5	A5	O2	VGG	B5	OE2/$\overline{OE2}$	Dout2
19	A10	A10	A3	A3	$\overline{E2}$	$\overline{E2}$	$\overline{RSTA}$	A6	A6	O1	IA6	B3	VDD	Dout4
20	CS1/$\overline{CS1}$	CS1/$\overline{CS1}$	A2	A4	$\overline{E1}$	$\overline{E1}$	CP	A7	A7	NC	IA5	B1	$\overline{OE1}$	Dout6
21	CS2/$\overline{CS2}$	CS2/$\overline{CS3}$	NC	A5	S3	S3	$\overline{RSTB}$	A8	A8	OE	IA4	RS1	VBB	RS0
22	A9	A9	NC	NC	S2	S2	M2	A9	A9	BLNKIn	IA3	RS2	A9	RS1
23	A8	A8	A1	NC	S1	S1	M1	NC	NC	VGG	IA2	RS3	A8	RS2
24	VCC	VCC	VCC	VDD	VCC	VCC	VCC	VCC	VCC	VCC	IA1	RS4	VCC	RS3

PN24(Cont.)

PN24

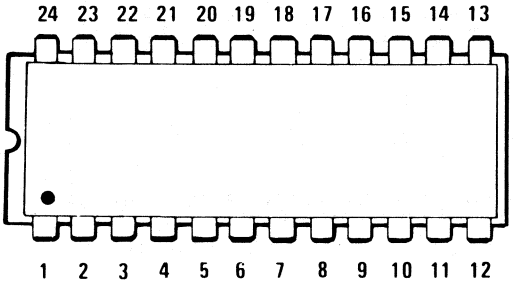

PN24(Cont.)

Pin	ft	fu	fv	fw	fx⑮	fy⑮	fz⑭	ga⑭	gb	gc	gd	ge③	gf	gg
1	VGG	CE	A4	A3	CLk1	CLk1	CLk1	CLk1	S0	B8	D0	P2	$\overline{CS}$	$\overline{CS}$
2	NC	NC	A5	A2	D1	$\overline{D1}$	D1	$\overline{D1}$	SRSI	B7	Q0	P1	$\overline{SHCLk}$	$\overline{CLk}$
3	NC	08	A6	A1	D2	$\overline{D2}$	D2	$\overline{D2}$	InA	B6	Q1	P0	R/$\overline{W}$	R/$\overline{W}$
4	O1	O7	A7	B1	D3	$\overline{D3}$	D3	$\overline{D3}$	QA	B5	Q2	D0	STCIR	NC
5	O2	O6	A8	B2	D4	$\overline{D4}$	D4	$\overline{D4}$	InB	B4	Q3	Q0	STCLk	MC
6	O3	O5	A9	B3	D5	$\overline{D5}$	D5	$\overline{D5}$	QB	B3	VCC	Q1	DI/O	DI/O
7	O4	O4	A10	B4	D6	$\overline{D6}$	D6	$\overline{D6}$	InC	B2	VCCA	Q2	Y0	P0
8	O5	O3	O1	B5	D7	$\overline{D7}$	D7	$\overline{D7}$	QC	B1	Q4	Q3	Y1	P1
9	NC	O2	O2	B6	D8	$\overline{D8}$	D8	$\overline{D8}$	InD	EA	Q5	VCC	Y2	P2
10	GND	O1	O3	B7	D9	$\overline{D9}$	D9	$\overline{D9}$	QD	DS	Q6	VCCA	Y3	P3
11	CE	GND	O4	B8	D10	$\overline{D10}$	D10	$\overline{D10}$	CLk	A/B	Q7	Q4	Y4	P4
12	VDD	VDD	GND	VSS	GND	GND	GND	GND	GND	VSS	D7	Q5	GND	GND
13	NC	NC	O5	A9	Q10	Q10	Q10	Q10	CLR	P/S	P7	Q6	Y5	P5
14	A1	A1	O6	CE	Q9	Q9	Q9	Q9	QE	A/S	P6	Q7	Y6	P6
15	A2	A2	O7	MC	Q8	Q8	Q8	Q8	InE	Clk	P5	D7	Y7	P7
16	A3	A3	O8	VGG	Q7	Q7	Q7	Q7	QF	A1	P4	P7	Y8	P8
17	A4	A4	O9	A8	Q6	Q6	Q6	Q6	InF	A2	CP	P6	Y9	P9
18	A5	A5	CS1	A7	Q5	Q5	Q5	Q5	A3	A3	VEE	P5	Y10	P10
19	A6	A6	CS2	A6	Q4	Q4	Q4	Q4	InG	A4	S0	P4	Y11	P11
20	A7	A7	A0	A5	Q3	Q3	Q3	Q3	QH	A5	S1	CP	Y12	P12
21	A8	A8	A1	A4	Q2	Q2	Q2	Q2	InH	A6	P3	VEE	Y13	P13
22	A9	A9	A2	NC	Q1	Q1	Q1	Q1	SLSI	A7	P2	S0	Y14	P14
23	NC	VGG	A3	NC	CLk2	CLk2	RST	RST	SI	A8	P1	S1	Y15	P15
24	VCC	VCC	VCC	VDD	VCC	VCC	VCC	VCC	VCC	VDD	P0	P3	VCC	VCC

PN24(Cont.)

PN24

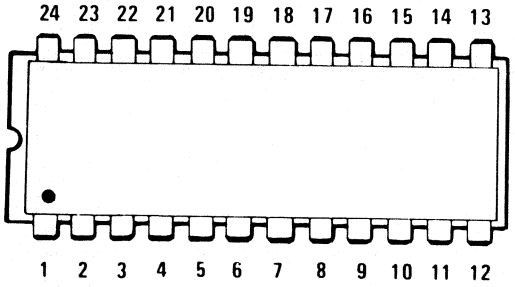

PN24(Cont.)

Pin	gh	gi③	gj	gk	gm	gn	go	gp	gq	gr	gs	gt	gu③	gv
1	$\overline{Q5}$	D4	I3	$\overline{WE}$	I4	A7	VSS	VSS	InA3	MC	A0	MK3	D2	A7
2	Q4	D5	I4	$\overline{D3}$	I5	A6	VGG	VGG	InA2	CE1	A1	M0	MK2	A6
3	Q4	Q5	I5	$\overline{D2}$	I6	A5	01	O1	InA1	CE2	A2	M1	D3	A5
4	$\overline{Q3}$	$\overline{Q5}$	I6	$\overline{D1}$	I7	A4	02	O2	0B1	A10	A3	M2	MK3	A4
5	Q3	Q4	I7	$\overline{D0}$	I8	A3	03	O3	0B2	A1	A4	M3	M0	A3
6	VCC	Q4	I8	M3	I9	A2	04	O4	0B3	A2	A5	VCC	M1	A2
7	VCCA	$\overline{Q3}$	I9	M2	I10	A1	In1	O5	0B4	A3	A6	VCCA	M2	A1
8	$\overline{Q2}$	Q3	I10	M1	I11	A0	In2	O6	0B5	A4	$\overline{R}$	Q3	M3	A0
9	Q2	VCC	I11	M0	I12	O1	In3	B1	0B6	A5	$\overline{W}$	Q2	VCC	O1
10	$\overline{Q1}$	VCCA	I12	$\overline{M0}$	I13	O2	In4	B2	0B7	A6	$\overline{E}$	Q1	VCCA	O2
11	Q1	$\overline{Q2}$	I13	$\overline{O1}$	I14	O3	In5	B3	0B8	A7	CS	Q0	Q3	O3
12	$\overline{Q0}$	Q2	GND	GND	GND	VSS	In6	B4	VSS	VSS	GND	MK1	Q2	VSS
13	Q0	$\overline{Q1}$	F0	$\overline{O0}$	F1	O4	In7	B5	NC	A8	VDD	D1	D0	O4
14	D0	Q1	F1	$\overline{O2}$	F2	O5	In8	B6	InA8	A9	VP	MK0	MK0	O5
15	D1	$\overline{Q0}$	F2	$\overline{O3}$	F3	O6	In9	B7	CE	B1	R/C	D0	D1	O6
16	D2	Q0	F3	$\overline{A0}$	F4	O7	In10	B8	MC	B2	D7	A3	MK1	O7
17	D3	D0	F4	$\overline{A1}$	F5	O8	In11	O7	VGG	B3	D6	A2	Q0	O8
18	VEE	D1	F5	$\overline{A2}$	F6	CS2/$\overline{CS2}$	In12	O8	InA7	B4	D5	VEE	Q1	CS2
19	MR	D2	F6	$\overline{A3}$	F7	VDD	08	O9	InA6	B5	D4	$\overline{WS}$	A3	A10
20	CPa	D3	F7	$\overline{E0}$	F8	CS1/$\overline{CS1}$	07	O10	InA5	B6	D3	A1	A2	CS1
21	CPb	VEE	I0	$\overline{E1}$	I1	A10	06	O11	InA4	B7	D2	A0	VEE	A11
22	D4	MR	I1	$\overline{E2}$	I2	A9	05	O12	NC	B8	D1	D2	$\overline{WS}$	A9
23	D5	CPa	I2	$\overline{E3}$	I3	A8	ERDB	ER	NC	VGG	D0	MK2	A1	A8
24	Q5	CPb	VCC	VCC	VCC	VCC	CLkIn	CLkIn	VDD	VLL	VCC	D3	A0	VCC

PN24(Cont.)

PN24

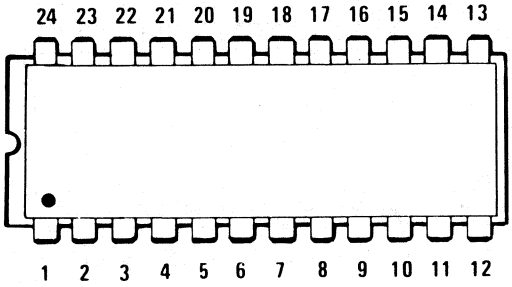

PN24(Cont.)

Pin	gw	gx③	gy	gz	ha	hb	hc	hd	he	hf③	hg	hh	hi	hj
1	NC	A3	A3	A7	A7	A7	A7	A7	A7	NC	A7	A7	A7	A1
2	CS2	A2	A4	A6	A6	A6	A6	A6	A6	$\overline{WE}$	A6	A6	A6	W
3	CS3	A1	A5	A5	A5	A5	A5	A5	A5	$\overline{CS}$	A5	A5	A5	BIn1
4	O0	A0	A6	A4	A4	A4	A4	A4	A4	DI0	A4	A4	A4	BIn2
5	O1	A5	A7	A3	A3	A3	A3	A3	A3	DI1	A3	A3	A3	BIn3
6	O2	A6	A8	A2	A2	A2	A2	A2	A2	DI2	A2	A2	A2	BIn4
7	O3	NC	Q0	A1	A1	A1	A1	A1	A1	DI3	A1	A1	A1	BIn5
8	O4	A7	Q1	A0	A0	A0	A0	A0	A0	NC	A0	A0(LSB)	A0	BIn6
9	O5	NC	Q2	OD	D0	D0	D0	DQ0	DQ0	VCC	O1	O1(LSB)	DQ0	BIn7
10	O6	NC	Q3	O1	D1	D1	D1	DQ1	DQ1	VCC0	O2	O2	DQ1	BIn8
11	O7	NC	NC	O2	D2	D2	D2	DQ2	DQ2	DO0	O3	O3	DQ2	MBY
12	VSS	VSS	GND	GND	GND	GND	GND	VSS	VSS	DO1	VSS	GND	VSS	GND
13	A8	OD	NC	O3	D3	D3	D3	DQ3	DQ3	DO2	O4	O4	DQ3	Bout8
14	A7	$\overline{CE2}$	Q4	O4	D4	D4	D4	DQ4	DQ4	DO3	O5	O5	DQ4	Bout7
15	A6	NC	Q5	O5	D5	D5	D5	DQ5	DQ5	NC	O6	O6	DQ5	Bout6
16	A5	DI/01	Q6	O6	D6	D6	D6	DQ6	DQ6	A0	O7	O7	DQ6	Bout5
17	A4	DI/02	Q7	O7	D7	D7	D7	DQ7	DQ7	A1	O8	O8(MSB)	DQ7	Bout4
18	A3	DI/03	ST	A11	PD/PGM	A11	CS2	A11	A11	NC	0E2/$\overline{0E2}$	CS3	CS	Bout3
19	A2	DI/04	E2	A10	A10	A10	A10	A10	A10	A2	VDD	CS2	A10	Bout2
20	A1	$\overline{CE1}$	$\overline{E1}$	$\overline{CE}$	$\overline{CS}$	CS1	CS1	$\overline{E}$/VPP	$\overline{E/PROG}$	A3	$\overline{0E1}$	$\overline{CS1}$	$\overline{OE}$	Bout1
21	A0	$\overline{WE}$	A0	VPP	VPP	CS2	A11	A12	VPP	VEE	VBB	A10(MSB)	$\overline{WE}$	RInH
22	CS0	NC	A1	A9	A9	A9	A9	A9	A9	NC	A9	A9	A9	CInH
23	CS1	A4	A2	A8	A8	A8	A8	A8	A8	A4	A8	A8	A8	A0
24	VCC	VCC	VCC	VCC	VCC	VCC	VCC	VCC	VCC	A5	VCC	VCC	VCC	VDD

PN24(Cont.)

PN24

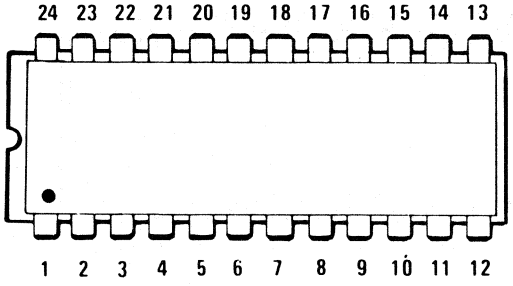

PN24(Cont.)

Pin	hk	hm	hn	ho	hp	hq	hr	hs	ht	hu	hv	hw	hx	hy
1	WD1	MA7	A7	A7	A7	MA7	A7	A7	NC	A7	A7	A7	A7	A7
2	W	MA6	A6	A6	A6	MA6	A6	A6	SO	A6	A6	A6	A6	A6
3	BIn1	MA5	A5	A5	A5	MA5	A5	A5	VCC	A5	A5	A5	A5	A5
4	BIn2	MA4	A4	A4	A4	MA4	A4	A4	LS	A4	A4	A4	A4	A4
5	BIn3	MA3	A3	A3	A3	MA3	A3	A3	PRST	A3	A3	A3	A3	A3
6	BIn4	MA2	A2	A2	A2	MA2	A2	A2	L1	A2	A2	A2	A2	A2
7	BIn5	MA1	A1	A1	A1	MA1	A1	A1	CLR	A1	A1	A1	A1	A1
8	BIn6	MA0	A0	A0	A0	MA0	A0	A0	L2	AØ	A0	A0	A0	A0
9	BIn7	BUS0	O0	O1	O1	DO0	DO1	01	L4	Q1	Q0	Q0	Q0	Q0
10	BIn8	BUS1	O1	O2	O2	DO1	DO2	02	L8	Q2	Q1	Q0	Q1	Q1
11	MBY	BUS2	O2	O3	O3	DO2	DO3	03	A1	Q3	Q2	Q1	Q2	Q2
12	GND	VSS	GND	VSS	GND	VSS	VSS	VSS	A2	GND	GND	VSS	VSS	GND
13	Bout8	BUS3	O3	O4	O4	DO3	DO4	04	A3	Q4	Q3	Q1	Q3	Q3
14	Bout7	BUS4	O4	O5	O5	DO4	DO5	05	A4	Q5	Q4	Q2	Q4	Q4
15	Bout6	BUS5	O5	O6	O6	DO5	DO6	06	A5	Q6	Q5	Q2	Q5	Q5
16	Bout5	BUS6	O6	O7	O7	DO6	DO7	07	A6	Q7	Q6	Q3	Q6	Q6
17	BUS7	O7	O8	O8	DO7		DO8	08	A7	Q8	Q7	Q3	Q7	Q7
18	Bout3	CEO	CS2	NC	A11	NC	CS2	A11	LC1	A11	S2	PROG	PROG	A11
19	Bout2	$\overline{MRD}$	A10	NC	A10	NC	A10	A10	AS	A10	A10	VDD	VDD	A10
20	Bout1	CS2	CS1	$\overline{CS}$	CS/$\overline{CS}$	$\overline{CS}$	CS1	CS1/$\overline{CS1}$	CUR	CS1/$\overline{CS1}$	$\overline{E}$	$\overline{E1}$	$\overline{E1}$	$\overline{E}$
21	WD2	CS1	A11	NC	A12	NC	CS3	CS2/$\overline{CS2}$	Clk	CS2/$\overline{CS2}$	S1	S	$\overline{S1}$	A12
22	WD4	NC	A9	NC	A9	NC	A9	A9	NC	A9	A9	A9	E2	A9
23	WD3	MUX	A8	A8	A8	MA8	A8	A8	PE	A8	A8	A8	A8	A8
24	VDD	VDD	VCC	VDD	VCC	VCC	VDD	VCC	GND	VCC	VCC	VCC	VCC	VCC

PN24(Cont.)

PN24

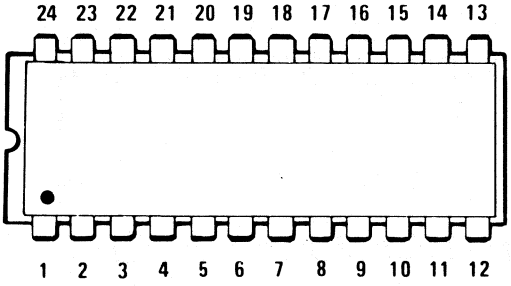

PN24 (Cont.)

Pin	hz®	ia	ib	ic	id	ie	if	ig	ih	ii	ij	ik	il	im
1	A7	A7	A3	A3	$\overline{E}$	A7	A7	VCC0	DI4	A7	A7	BUS0	A4	A7
2	A6	A6	A2	A2	D0	A6	A6	DO1	$\overline{BS3}$	A6	A6	BUS1	A3	A6
3	A5	A5	A1	A1	CC	A5	A5	$\overline{BS1}$	DO3	A5	A5	BUS2	A2	A5
4	A4	A4	A0	A0	Q0	A4	A4	DO2	$\overline{BS4}$	A4	A4	BUS3	A1	A4
5	A3	A3	L3	L3	Q1	A3	A3	$\overline{BS2}$	DO4	A3	A3	BUS4	A0	A3
6	A2	A2	L2	L2	Q2	A2	A2	DI1	VCC	A2	A2	BUS5	R2	A2
7	A1	A1	L1	L1	Q3	A1	A1	DI2	VCC0	A1	A1	BUS6	R1	A1
8	A0	A0	L0	L0	Q4	A0	A0	$\overline{WE}$	DO1	A0	A0	BUS7	R0	A0
9	01	O0/Q0	NC	NC	Q5	O0	O0	A5	$\overline{BS1}$	I/O1	D0	CS1	D7	O1
10	02	O1/Q1	NC	O1	NC	O1	O1	A6	DO2	I/O2	D1	$\overline{CS2}$	D6	O2
11	03	O2/Q2	NC	O2	D	O2	O2	A7	$\overline{BS2}$	I/O3	D2	$\overline{CS3}$	D5	O3
12	GND	VSS	GND	GND	GND	GND	GND	VEE	DI1	GND	GND	VSS	GND	GND
13	04	O3/Q3	O1	O3	CP	O3	O3	A0	DI2	I/O4	D3	CS4	D4	O4
14	05	O4/Q4	O2	O4	$\overline{S}$	O4	O4	A1	$\overline{WE}$	I/O5	D4	$\overline{CS5}$	D3	O5
15	06	O5/Q5	O3	O5	NC	O5	O5	A2	A5	I/O6	D5	$\overline{MRD}$	D2	O6
16	07	O6/Q6	O4	O6	Q6	O6	O6	A3	A6	I/O7	D6	$\overline{MWR}$	D1	O7
17	08	O7/Q7	O5	O7	Q7	O7	O7	A4	A7	I/O8	D7	MA6	D0	O8
18	CE4	$\overline{CE/E}$	$\overline{CS2}$	$\overline{CS2}$	Q8	CS2	A11	DI3	VEE	$\overline{CE2}$	CS/$\overline{CS}$	MA5	$\overline{CS2}$	CS3
19	CE3	A10	A6	A6	Q9	A10	A10	DI4	A0	A10	A10	MA4	R3	CS2
20	CE2	$\overline{OE/G}$	$\overline{CS1}$	$\overline{CS1}$	Q10	CS1	CS	$\overline{BS3}$	A1	$\overline{CE1}$	$\overline{OE}$	MA3	$\overline{CS1}$	CS1
21	CE1	VPP	CS3	CS3	Q11	A11	A12	DO3	A2	R/W	A11	MA2	CS3	A10
22	NC	A9	A5	A5	NC	A9	A9	$\overline{BS4}$	A3	A9	A9	MA1	A6	A9
23	A8	A8	A4	A4		A8	A8	DO4	A4	A8	A8	MA0	A5	A8
24	VCC	VCC	VCC	VCC	VCC	VCC	VCC	VCC	DI3	VDD	VCC	VDD	VCC	VCC

PN24 (cont.)

PN24

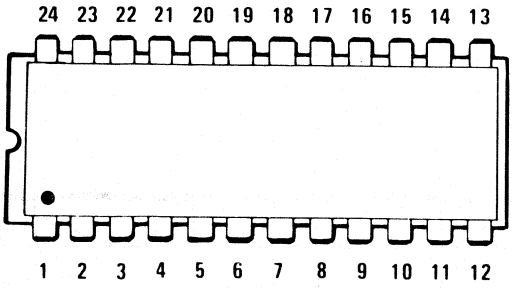

PN24 (cont.)

Pin	in	io	ip	iq	ir	is	it	iu	iv	iw	ix	iy	iz	ja
1	A7	A7	A7	A7	A7	A7	A7	A7	A7	A7	A7	A7	A7	A7
2	A6	A6	A6	A6	A6	A6	A6	A6	A6	A6	A6	A6	A6	A6
3	A5	A5	A5	A5	A5	A5	A5	A5	A5	A5	A5	A5	A5	A5
4	A4	A4	A4	A4	A4	A4	A4	A4	A4	A4	A4	A4	A4	A4
5	A3	A3	A3	A3	A3	A3	A3	A3	A3	A3	A3	A3	A3	A3
6	A2	A2	A2	A2	A2	A2	A2	A2	A2	A2	A2	A2	A2	A2
7	A1	A1	A1	A1	A1	A1	A1	A1	A1	A1	A1	A1	A1	A1
8	A0	A0	A0	A0	A0	A0	A0	A0	A0	A0	A0	A0	A0	A0
9	Q0	O0	O0	DQ0	DQ0	Q0	Q0	Q0	Q0	Q0	Q0	Q0	Q0	Q0
10	Q1	O1	O1	DQ1	DQ1	Q1	Q1	Q1	Q1	Q1	Q1	Q1	Q1	Q1
11	Q2	O2	O2	DQ2	DQ2	Q2	Q2	Q2	Q2	Q2	Q2	Q2	Q2	Q2
12	GND	GND	GND	VSS	VSS	GND	GND	GND	GND	GND	GND	GND	GND	GND
13	Q3	O3	O3	DQ3	DQ3	Q3	Q3	Q3	Q3	Q3	Q3	Q3	Q3	Q3
14	Q4	O4	O4	DQ4	DQ4	Q4	Q4	Q4	Q4	Q4	Q4	Q4	Q4	Q4
15	Q5	O5	O5	DQ5	DQ5	Q5	Q5	Q5	Q5	Q5	Q5	Q5	Q5	Q5
16	Q6	O6	O6	DQ6	DQ6	Q6	Q6	Q6	Q6	Q6	Q6	Q6	Q6	Q6
17	Q7	O7	O7	DQ7	DQ7	Q7	Q7	Q7	Q7	Q7	Q7	Q7	Q7	Q7
18	CP	CS4	CS4	$\overline{CE}$	$\overline{CE}$	G2	G2	E2	C↑	G2	N/C	E2	C↑	G2
19	$\overline{ES}$	CS3	CS3	NC	A10	G3	G3	E3	G2SYNC	G3	N/C	E3	G2SYNC	G3
20	$\overline{CLR}$	$\overline{CS2}$	$\overline{CS2}$	$\overline{OE}$	$\overline{OE}$	$\overline{G1}$	$\overline{G1}$	$\overline{E1}$	$\overline{G1}$	$\overline{G1}$	$\overline{G}$	E1	$\overline{G1}$	$\overline{G1}$
21	E	$\overline{CS1}$	$\overline{CS1}$	$\overline{WE}$	$\overline{WE}$	$\overline{G2}$	$\overline{G4}$	$\overline{E4}$	G3	$\overline{G4}$	N/C	E4	G3	A10
22	$\overline{PS}$	NC	A9	A9	A9	NC	G5	E5	N/C	A9	A9	A9	A9	A9
23	A8	A8	A8	A8	A8	A8	A8	A8	A8	A8	A8	A8	A8	A8
24	VCC	VCC	VCC	VCC	VCC	VCC	VCC	VCC	VCC	VCC	VCC	VCC	VCC	VCC

PN24 (cont.)

PN24

PN24 (cont.)

Pin	jb	jc	jd⑫	je⑳	jf㉑	jg	jh	j	jl	jm	jn	jo	jp	jq	jr	js
1	A7	A7	A7	A7	A7	A7	VCC	A7	A7	AR2	AW2	A7	A7	A0	A0	A7
2	A6	A6	A6	A6	A6	A6	X0	A6	A6	AR1	AW3	A6	A6	A10(NC)	A10	A6
3	A5	A5	A5	A5	A5	A5	X1	A5	A5	AR0	AR3	A5	A5	A9	A9	A5
4	A4	A4	A4	A4	A4	A4	X2	A4	A4	Q0	AR2	A4	A4	A8	A8	A4
5	A3	A3	A3	A3	A3	A3	X3	A3	A3	Q1	AR1	A3	A3	A7	A7	A3
6	A2	A2	A2	A2	A2	A2	X4	A2	A2	VCC	AR0	A2	A2	A6	A6	A2
7	A1	A1	A1	A1	A1	A1	X5	A1	A1	VCCA	Q0	A1	A1	A5	A5	A1
8	A0	A0	A0	A0	A0	A0	A	A0	A0	Q2	Q1	A0	A0	A4	A4	A0
9	Q0	Q0	DQ1	Q1	Q1	O1	B	D0	O0	Q3	VCC	O1	O1	O1	O1	O1
10	Q1	Q1	DQ2	Q2	Q2	O2	C	D1	O1	D3	VCCA	O2	O2	O2	O2	O2
11	Q2	Q2	DQ3	Q3	Q3	O3	D	D2	O2	D2	Q2	O3	O3	O3	O3	O3
12	GND	GND	VSS	VSS	VSS	VSS	E	GND	GND	D1	Q3	GND	GND	GND	GND	GND
13	Q3	Q3	DQ4	Q4	Q4	O4	F	D3	O3	D0	D3	O4	O4	O4	O4	O4
14	Q4	Q4	DQ5	Q5	Q5	O5	G	D4	O4	$\overline{OE1}$	D2	O5	O5	O5	O5	O5
15	Q5	Q5	DQ6	Q6	Q6	O6	H	D5	O5	$\overline{OE2}$	D1	O6	O6(NC)	O6	O6	O6
16	Q6	Q6	DQ7	Q7	Q7	O7	I	D6	O6	$\overline{WE1}$	D0	O7	O7(NC)	O7	O7	O7
17	Q7	Q7	DQ8	Q8	Q8	O8	J	D7	O7	WE2	$\overline{OE1}$	NC	NC	NC	O8	O8
18	E2	C⬆	$\overline{CS}$	PD/PGM	A11	CS2/$\overline{CS2}$	K	CS2	$\overline{CE}$/PGM	VEE	$\overline{OE2}$	E4	E4	NC	O9	CE2
19	E3	G2SYNC	AR	AR	A10	A10	L	NC	A10	MR	$\overline{WE1}$	E3	E3	$\overline{E2}$	$\overline{E2}$	CE3
20	$\overline{E1}$	$\overline{G1}$	$\overline{OE}$	$\overline{CS}$	S	CS1/$\overline{CS1}$	M	CS1	$\overline{OE}$	AWO	$\overline{WE2}$	$\overline{E2}$	$\overline{E2}$	$\overline{E1}$	$\overline{E1}$	$\overline{CE1}$
21	A10	A10	$\overline{W}$	VPP	A12	A11	N	NC	NPP	AW1	VEE	$\overline{E1}$	$\overline{E1}$	A3	A3	$\overline{CE4}$
22	A9	A9	A9	A9	A9	A9	CS1	A9	A9	AW2	MR	NC	A9	A2	A2	A9
23	A8	A8	A8	A8	A8	A8	CS2	A8	A8	AW3	AW0	A8	A8	A1	A1	A8
24	VCC	VCC	VCC	VCC	VCC	VCC	GND	VCC	VCC	AR3	HW1	VCC	VCC	VCC	VCC	VCC

Registery Control #'s

① — Can Type Only.
② — Also Available in Can Type by some Mfgrs. See Type #Outline Dr.
③ — Flat Pack.
④ — Also Available in Flat Pack by some Mfgrs. See Type #Outline Dr.
⑤ — Pin 13 is also the programming pin.
⑥ — Pin 15 is also the programming pin.
⑦ — CS1/CS1/NC Programable CS.
⑧ — CS2/CS2/NC Programable CS.
⑨ — CS3/CS3/NC.
⑩ — Connect Substrate Externally to Ground.
⑪ — PIN 18, 20, 21 has optional CS & NC.
⑫ — PIN 20 is also programming pin.
⑬ — PIN 20, 21 has optional CS & NC.
⑭ — PIN 20 has optional CS & NC.
⑮ — PIN 1-6 & 7-11 & 23 all common.
⑯ — PIN 1-11 all common.
⑰ — PIN 18 & 20 has optional CS & NC.
⑱ — PIN 22 - Norm. Open; Conn to VCC During Prog.

24. PIN CONNECTIONS

IN PIN NUMBER SEQUENCE

PN28

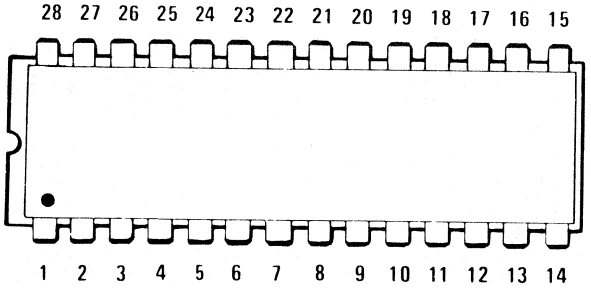

Pin	a	b	c	d	e	f	g	h	i	j	k	m	n	o	p	q	r
1	A3	A3	O2	D1	O11	O12	$\overline{LS1}$	A7	W4	VBB	VBB	DI/O1	VSS	VBB	NC	FE+	D1
2	A4	A4	O3	C4	O10	O11	$\overline{CS2}$	A6	W3	NC	A10	DI/O2	D0	CS3	A12	I7	D2
3	A5	A5	O4	VSS	O9	O10	A0	A5	W2	A9	A9	DI/O3	D1	A7	A7	I6	D3
4	D0	DI0	A1	O1	O8	O9	A1	A4	W1	A8	A8	DI/O4	D2	A6	A6	I5	D4
5	D1	DI1	A2	O2	O7	O8	A2	A3	VDD	A7	A7	DI/O5	D3	A5	A5	I4	D5
6	D2	DI2	D1	O4	O6	O7	A3	A2	NC	A6	A6	DI/O6	D4	A4	A4	I3	D6
7	D3	DI3	D2	O3	O5	O6	A4	A1	VSS	A5	A5	VGI	D5	A3	A3	I2	VCC
8	D4	DI4	D3	O5	O4	O5	A5	A0	A5	A4	A4	DI/O7	D6	A2	A2	I1	D7
9	D5	DI5	D4	O6	O3	O4	A6	O1	A0	A3	A3	DI/O8	D7	A1	A1	I0	D8
10	D6	DI6	D5	O7	O2	O3	A7	O2	A1	A2	A2	DI/O9	NC	A0	A0	F7	D9
11	D7	DI7	D6	O8	O1	O2	A8	O3	A2	A1	A1	DI/O10	CE	D0	O0	F6	D10
12	D8	DI8	D7	VSS	VD0	O1	A9	VSS	A3	NC	NC	DI/O11	CS0	01	O1	F5	D11
13	$\overline{WE}$	$\overline{WE}$	D8	A2	A11	VDD	A10	VCG	A4	NC	NC	DI/O12	CS1	D2	O2	F4	D12
14	GND	GND	NC	A1	A10	CS3	VBB	VBB	IN1	GND	GND	DI/O13	VCC	GND	GND	GND	D13
15	$\overline{CS}$	$\overline{CS}$	NC	B1	A9	CS2	VSS	PG	E2	O1	O1	DI/O14	CS2	D3	O3	F3	D14
16	O8	$\overline{DO8}$	NC	B2	CI	CS1	VDD	VCL	E1	O2	O1	DI/O15	CS3	D4	O4	F2	D15
17	O7	$\overline{DO7}$	VSS	B3	A6	CE	O7	O4	Out1	O3	O2	VSS	A11	D5	O5	F1	VSS
18	O6	$\overline{DO6}$	C4	B4	A5	NC	O6	O5	BOOST	O4	O2	CLk	A10	D6	O6	F0	CLk
19	O5	$\overline{DO5}$	C2	C1	A4	A6	O5	O6	EQLZ	O5	O3	A0	A9	D7	O7	$\overline{FLAG}$	A0
20	O4	$\overline{DO4}$	C3	C3	A3	A5	O4	O7	Out2	O6	O3	A1	A8	A11	$\overline{CE}$	I15	A1
21	O3	$\overline{DO3}$	C1	C2	A2	A4	O3	O8	In2	O7	O4	A2	A7	A10	A10	I14	A2
22	O2	$\overline{DO2}$	B4	D8	A1	A3	O2	NC	WCON	O8	O4	A3	A6	$\overline{CE}$	$\overline{OE}$	I13	A3
23	O1	$\overline{DO1}$	B2	D7	A7	VSS	O1	VDD	NC	O9	O5	A4	A5	CS1	A11	I12	A4
24	O0	$\overline{DO0}$	B3	D6	A8	A2	O0	$\overline{CS}$	NC	O10	O5	VGG	A4	A9	A9	I11	VGG
25	A0	A0	B1	D5	NC	A1	RE	NC	W8	CS	CS	C1	A3	A8	A8	I10	C1
26	A1	A1	A4	D4	VSS	A7	CS4	A9	W7	Ø	Ø	C2	A2	VCC	CS	I9	C2
27	A2	A2	A3	D3	NC	A8	CS3	A8	W6	VCC	VCC	CS	A1	CS2	CS	I8	CS
28	VCC	VCC	O1	D2	O12	V1	VCC	VCC	W5	VDD	VDD	DI/O0	A0	VDD	VCC	VCC	D0

PN28(Cont.)

24. PIN CONNECTIONS

IN PIN NUMBER SEQUENCE

PN28

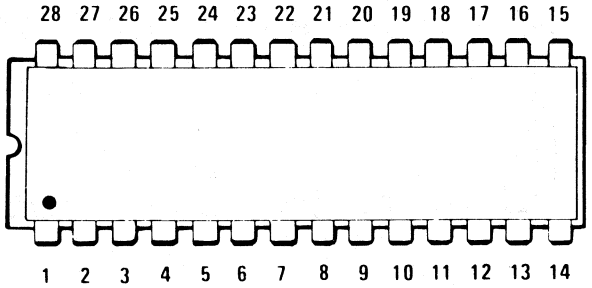

PN28(Cont)

Pin	s	t	u	v	w	x	y	z	aa	ab	ac	ad	ae	af	ag	ah	ai
1	$\overline{CS1}$	VBP	VBB	D0	D0	VGG	FE	VP	I7	$\overline{COUNT}$	VCC	NC	$\overline{F}$	$\overline{RFSH}$	LA0	NC	VSS
2	$\overline{CS2}$	A10	NC	VGG	VGG	$\overline{OE}$	I7	A7	I6	RFR/E	X1	A7	A7	A7	CA0	A12	IR4
3	A0	A9	A9	OR	OR	Q0	I6	A6	I5	ROW/E	X2	A6	A6	A6	CA1	A7	IR5
4	A1	A8	A8	$\overline{MR}$	$\overline{MR}$	Q1	I5	A5	I4	NC	X3	A5	A5	A5	CA2	A6	IR6
5	A2	A7	A7	PD	PP	Q2	I4	A4	I3	A1	X4	A4	A4	A4	CA3	A5	IR7
6	A3	A6	A6	SD	Q0	Q3	I3	A3	I2	A8	X5	A3	A3	A3	CStrobe	A4	IR8
7	A4	A5	A5	Q0	Q1	Q4	I2	A2	I1	A2	NC	A2	A2	A2	CA4	A3	OS
8	A5	A4	A4	Q1	Q2	Q5	I1	A1	I0	A9	g1	A1	A1	A1	CA5	A2	OE
9	A6	A3	A3	Q2	Q3	Q6	I0	A0	F8	A0	g2	A0	A0	A0	CA6	A1	VGG
10	A7	A2	A2	Q3	OE	Q7	F7	O8	F7	A7	b	D0	DQ0	DQ0	CA7	A0	ODR
11	A8	A1	A1	OE	Q4	Q8	F6	O7	F6	$\overline{O0}$	c	D1	DQ1	DQ1	GM	Q0	OR8
12	A9	NC	NC	Q4	Q5	OR	F5	O6	F5	$\overline{O2}$	d1	D2	DQ2	DQ2	SCD	Q1	OR7
13	A10	NC	NC	Q5	Q6	SO	F4	O5	F4	$\overline{OT}$	d2	GND	GND	VSS	GND	Q2	OR6
14	VBB	GND	GND	Q6	Q7	VDD	GND	GND	GND	GND	e	D3	DQ3	DQ3	D9	GND	OR5
15	VSS	O1	O1	Q7	Q8	$\overline{MR}$	F3	O4	F3	Z/DET	f	D4	DQ4	DQ4	D8	Q3	OR4
16	VDD	O2	O2	VDD	VDD	IR	F2	O3	F2	$\overline{O5}$	g	D5	DQ5	DQ5	D7	Q4	OR3
17	O7	NC	O3	SL	D8	S1	F1	O2	F1	$\overline{O4}$	h	D6	DQ6	DQ6	D6	Q5	OR2
18	O6	O3	O4	PL	PL	D8	F0	O1	F0	$\overline{O3}$	j	D7	DQ7	DQ7	D5	Q6	OR1
19	O5	O4	O5	FLAG	FLAG	D7	$\overline{CE}$	$\overline{CS}$	$\overline{CE}$	$\overline{O6}$	j	$\overline{CE}$	$\overline{S}$	$\overline{CE}$	D4	Q7	OR0
20	O4	O5	O6	D7	D7	D6	I15	A15	I15/IF	A10	NC	A10	A10	A10	D3	E/E	IRE
21	O3	NC	O7	D6	D6	D5	I14	A14	I14/IE	A3	k	$\overline{OE}$	$\overline{R}$	$\overline{OE}$	D2	A10	VDD
22	O2	O6	O8	D5	D5	D4	I13	A13	I13/ID	A11	l	A11	A11	N/C	D1	G/G	IS
23	O1	O7	O9	D4	D4	D3	I12	A12	I12/IC	A4	m	A9	A9	A9	D0	A11	IE
24	O0	NC	NC	VSS	VSS	D2	I11	A11	I11/IB	A12	n	A8	A8	A8	LA3	A9	M R
25	$\overline{RE}$	CS	CS	$\overline{IR}$	IR	D1	I10	A10	I10/IA	A5	CS1	CS2/$\overline{CS2}$	E	CS	LA2	A8	IRO
26	CS4	Ø	Ø	D3	D3	D0	I9	A9	I9	A13	CS2	CS1/CS1	$\overline{W}$	$\overline{WE}$	LA1	S1/S1	IR1
27	CS3	VCC	VCC	D2	D2	$\overline{TE}$	I8	A8	I8	A6	GND	VCC	VCC	VCC	VCC	S2/S2	IR2
28	VCC	VDD	VDD	D1	D1	VSS	VCC	VCC	VCC	VCC	X0	A12	A12	N/C	LStrobe	VCC	IR3

24. PIN CONNECTIONS

IN PIN NUMBER SEQUENCE

PN40

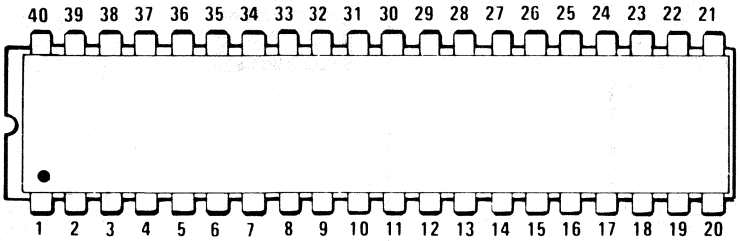

Pin	a	b	c	d	e	f	g	h	i	j	k	l	m	n	o
1	SUBST	A7	VCC	B3	CKIA	CKIA	GND	VSS	PC3	PC3	$\overline{CE1}$	$\overline{CE}$	$\overline{CE}$	$\overline{T/C}$	$\overline{T/C}$
2	NC	A6	FCB	VLL	CKIB	CKIB	D1	G5	PC4	PC4	CE2	CE	CE	D1	D1
3	X0	A5	FCC	CLk	CKIC	CKIC	D2	G4	Tin	Tin	CLk	CLK	CLK	NC	NC
4	X1	A4	SHFTin	X9	CKID	CKID	D3	G3	RESET	RESET	RESET	Reset	Reset	NC	Q1
5	X2	A3	CONTin	X8	CKIE	CKIE	D4	G2	PC5	PC5	NC	NC	VDD	Q1	Q2
6	X3	ST	PTYIin	X7	CKIF	CKIF	D5	G1	TOUT	TOUT	READY	Ready	Ready	Q2	Q3
7	Y0	1	PTYout	X6	CKIG	CKIG	D6		10/M	10/M	$\overline{10/M}$	$\overline{10/M}$	$\overline{10/M}$	Q3	Q4
8	Y1	2	DOB8	X5	CKIH	CKIH	D7		$\overline{CE}$	CE	$\overline{IOR}$	$\overline{IOR}$	$\overline{IOR}$	Q4	Q5
9	Y2	3	DOB7	X4	CKII	CKII	D8		RD	RD	$\overline{RD}$	$\overline{RD}$	$\overline{RD}$	Q5	Q6
10	Y3	4	DOB6	X3	CKIJ	CKIJ	D9	K	WR	WR	$\overline{IOW}$	$\overline{IOW}$	$\overline{IOW}$	Q6	Q7
11	Y4	5	DOB5	X2	CKIK	CKIK	D10	D	ALE	ALE	ALE	ALE	ALE	Q7	Q8
12	Y5	6	DOB4	X1	CKIL	CKIL	KBINH4	B	AD0	AD0	AD0	ADO	ADO	Q8	Q9
13	Y6	7	DOB3	DSTOUT	CKIM	CKIM	LO/RO	A	AD1	AD1	AD1	AD1	AD1	Q9	Q10
14	Y7	8	DOB2	DSTCON	CNKIA	CKIA	YA	VDD	AD2	AD2	AD2	AD2	AD2	Q10	Q11
15	X4	NC	DOB1	OE	CNKIB	CKIB	YB	RC	AD3	AD3	AD3	AD3	AD3	Q11	Q12
16	X5	NC	STRBO	REPT	CNKIC	CKIC	YC	DUMP	AD4	AD4	AD4	AD4	AD4	Q12	Q13
17	X6	NC	VGI	KBM	CNKOA	CKIA	X0	CHG	AD5	AD5	AD5	AD5	AD5	Q13	Q14
18	X7	NC	VGG	VGG	CNKOB	CKIB	X1	C	AD6	AD6	AD6	AD6	AD6	Q14	Q15
19	NC	$\overline{EN}$	STCONI	CONT	CNKOC	CKIC	X2	P	AD7	AD7	AD7	AD7	AD7	Q15	Q16
20	NC	GND	D/SCin	S/LI/O	DBOSR/C	DBOSR/C	X3	E	VSS	VSS	VSS	VSS	VSS	VSS	VSS
21	NC	A0	Y10	SHIFT	S2	S1	X4	H10	PA0	PA0	A8	A8	A8	NC	Q17
22	NC	A1	Y9	Y10	S1	S2	X8	H9	PA1	PA1	A9	A9	A9	Q16	Q18
23	X8	A2	Y8	Y1	B0	B0	X9	H8	PA2	PA2	A10	A10	A10	Q17	Q19
24	X9	$\overline{CE1}$	Y7	Y2	B1	B1	X10	H7	PA3	PA3	PA0	PA0	PA0	Q18	Q20
25	X10	NC	Y6	Y3	B2	B2	X11	H6	PA4	PA4	PA1	PA1	PA1	Q19	Q21
26	X11	NC	Y5	Y4	B3	B3	X12	H5	PA5	PA5	PA2	PA2	PA2	Q20	Q22
27	Y8	$\overline{CE2}$	Y4	Y5	B4	B4	X13	H4	PA6	PA6	PA3	PA3	PA3	Q21	Q23
28	Y9	9	Y3	Y6	B5	B5	X15	H3	PA7	PA7	PA4	PA4	PA4	Q22	Q24
29	Y10	10	Y2	Y7	B6	B6	X14	H2	PB0	PB0	PA5	PA5	PA5	Q23	Q25
30	Y11	11	Y1	Y8	B7	B7	X5	H1	PB1	PB1	PA6	PA6	PA6	Q24	Q26
31	Y12	12	Y0	Y9	B8	B8	X7	F8	PB2	PB2	PA7	PA7	PA7	Q25	Q27
32	Y13	13	X7	VSS	B9	DOPOL	X6	F7	PB3	PB3	PB0	PB0	PB0	Q26	Q28
33	Y14	14	X6	B5	DLYSTBO	DLYSIBB	ALI	F6	PB4	PB4	PB1	PB1	PB1	Q27	Q29
34	Y15	15	X5	B6	SOSR/C	SOSR/C	SLI	F5	PB5	PB5	PB2	PB2	PB2	Q28	Q30
35	X12	16	X4	B7	IOSR/C	IOSR/C	$\overline{KPD}$	F4	PB6	PB6	PB3	PB3	PB3	Q29	Q31
36	X13	NC	X3	B8	OEin	OEin	CLk	F3	PB7	PB7	PB4	PB4	PB4	Q30	Q32
37	X14	NC	X2	B1	DLYR/C	DLYR/C	$\overline{POR}$	F2	PC0	PC0	PB5	PB5	PB5	DO	DO
38	X15	A9	X1	B2	VSS	VSS	MATIN	F1	PC1	PC1	PB6	PB6	PB6	RST⑲	RST
39	NC	A8	X0	B9	VDD	VDD	AKD	G8	PC2	PC2	PB7	PB7	PB7	CLK	CLK
40	NC	VCC	FCA	B4	VGG	VGG	VCC	G7	VCC	VCC	VCC	VCC	VCC	VDD	VDD

24. PIN CONNECTIONS

IN PIN NUMBER SEQUENCE

PN42

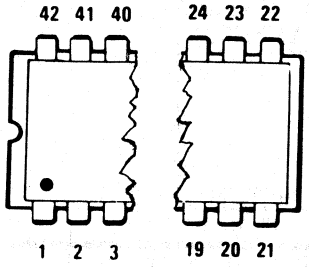

Pin	a				
1	CE				
2	C				
3	B				
4	A				
5	+5V				
6	Y7				
7	Y6				
8	Y5				
9	Y4				
10	Y3				
11	Y2				
12	Y1				
13	Y0				
14	Y8				
15	Y9				
16	Y10				
17	Y11				
18	Y12				
19	Y13				
20	Y14				
21	Y15				
22	Y23				
23	Y22				
24	Y21				
25	Y20				
26	Y19				
27	Y18				
28	Y17				
29	Y16				
30	Y24				
31	Y25				
32	Y26				
33	Y27				
34	Y28				
35	Y29				
36	Y30				
37	Y31				
38	GND				
39	VINH				
40	F				
41	E				
42	D				

PN48

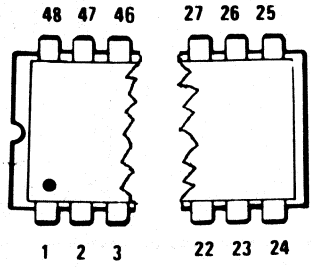

Pin	a	b	c	d	e
1	VCC	VCC			
2	CS1	CS1			
3	X0	X0			
4	X1	X1			
5	X2	X2			
6	X3	X3			
7	X4	X4			
8	X5	X5			
9	O21	N			
10	O22	M			
11	O23	L			
12	O24	K			
13	O25	J			
14	O26	I			
15	O27	H			
16	O28	G			
17	O29	F			
18	O30	E			
19	NC	NC			
20	O31	D			
21	O32	C			
22	O33	B			
23	O34	A			
24	O35	NC			
25	O20	NC			
26	O19	NC			
27	O18	NC			
28	O17	NC			
29	O16	a1			
30	O15	a2			
31	NC	NC			
32	O14	b			
33	O13	c			
34	O12	d1			
35	O11	d2			
36	O10	e			
37	O9	f			
38	O8	g			
39	O7	h			
40	O6	i			
41	O5	j			
42	O4	k			
43	NC	NC			
44	O3	l			
45	O2	m			
46	O1	n			
47	CS2	CS2			
48	GND	GND			

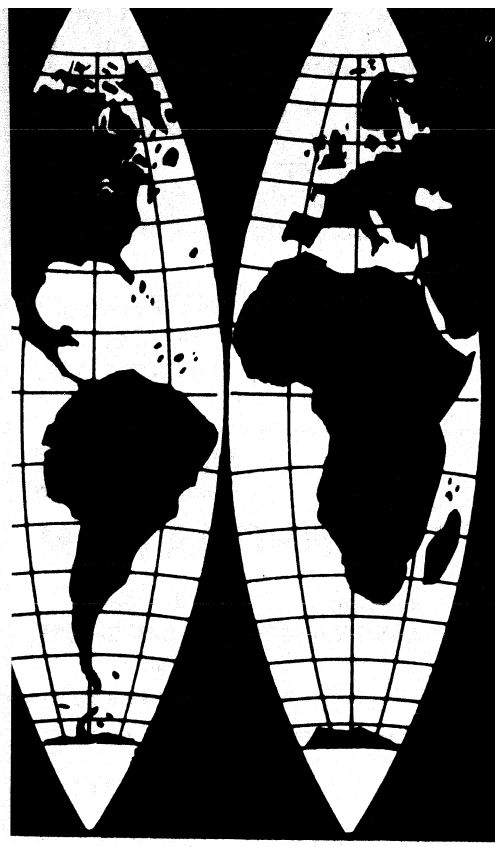

MEMORY IC 20

Manufacturers' Sales Offices

These manufacturers have listed their sales offices in this section for your convenience. Please contact the sales office nearest you for any additional information you may need.

(MANUFACTURERS IN ORDER OF D.A.T.A. CODE LETTERS)

AMD – AVANCED MICRO DEVICES, INC.

	Zip Code	Telephone No.	TWX/Telex
901 Thompson Place, Sunnyvale, California	**94086**	**408-732-2400**	**910-339-9280 34-6306**

FCA – FUJITSU AMERICA, INC.

FUJITSU

	Zip Code	Telephone No.	TWX/Telex
COMPONENTS SALES DIVISION 910 Sherwood Dr., Lake Bluff	**60044**	**312-295-2610**	**20-6196/910-651-2259**

FERB – FERRANTI ELECTRONICS LIMITED

FERRANTI semiconductors

			Zip Code	Telephone No.	TWX/Telex
Fields New Road, Chadderton, Oldham, Lancashire, England			**OL9 8NP**	**061-624-0515/ 6661**	**668038**
GERMANY	**Munich 22**	Ferranti GmbH Widenmayerstrasse	**D8000**	**089 293 871**	**523980**
	Hannover 21	Ferranti GmbH Brabeckstr 5	**3000**	**0511/524166**	**523980**
UNITED STATES					
CALIFORNIA	**Sunnyvale**	Interdesign, Inc. 1255 Reamwood Avenue	**94086**	**408-734-8666**	**910-339-9374**
NEW YORK	**Commack**	Ferranti Electric Inc. 87 Modular Avenue	**11725**	**516-543-0200**	**510-226-1490**

FMI – FUJITSU MICROELECTRONICS, INC.

FUJITSU MICROELECTRONICS

	Zip Code	Telephone No.	TWX/Telex
2945 Oakmead Village Court, Santa Clara, California	**95051**	**408-727-1700**	**910-338-0047** **181172**

FSC – FAIRCHILD CAMERA & INSTRUMENT CORPORATION

FAIRCHILD

	Zip Code	Telephone No.	TWX/Telex
SEMICONDUCTORS PRODUCT GROUP 464 Ellis Street, Mountain View, California	**94040**	**415-962-5011**	**910-379-6435** Cable **FAIRSEMCO**

ITT – ITT SEMICONDUCTORS

ITT Semiconductors

			Zip Code	Telephone No.	TWX/Telex
INTERMETALL Post Office Box 840, Freiburg, West Germany			**D-7800**	**761-5171**	**(07) 72716**
JAPAN	**Tokyo**	ITT Semiconductors Post Office Box 21 Shinjuku-ku	**160-91**	**3478881-5**	**22858**
UNITED KINGDOM	**Sidcup (Kent)**	ITT Semiconductors H Maidstone Rd.	**DA14 5HT**	**1-300 3333**	**21836**
UNITED STATES	**Lawrence (Massachusetts)**	ITT Semiconductors 500 Broadway	**01841**	**617-688-1881**	**710-342-1357**
	Dallas (Texas)	ITT Semiconductors 2995 LBJ Freeway Suite 130	**75234**	**214-243-7851**	

MMI – MONOLITHIC MEMORIES INC.

MMI

	Zip Code	Telephone No.	TWX/Telex
1165 East Arques Avenue, Sunnyvale, California	**94086**	**408-739-3535**	**910-339-9229**

NSC – NATIONAL SEMICONDUCTOR CORP.

			Zip Code	Telephone No.	TWX/Telex
2900 Semiconductor Drive, Santa Clara, California			**95051**	**408-737-5000**	**910-339-9240**
CALIFORNIA	**Irvine**	National Semiconductor Western Area Office 17870 Sky Park Circle Suite 108	**92714**	**714-957-1626**	**910-595-2593**

Continued on next page

NSC – NATIONAL SEMICONDUCTOR CORP. (Con't)

			Zip Code	Telephone No.	TWX/Telex
2900 Semiconductor Drive, Santa Clara, California			**95051**	**408-737-5000**	**910-339-9240**
CONNECTICUT	**Wilton**	National Semiconductor Northeast Area Sales Office Piersall Bldg., Suite 217 Wilton Center	**06897**	**203-762-0378**	**710-479-3512**
FLORIDA	**Fort Lauderdale**	National Semiconductor Regional Office 1001 N.W. 62nd St. Suite 110	**33309**	**305-772-6970**	**510-955-9708**
ILLINOIS	**Schaumburg**	National Semiconductor West-Central Regional Office 2030 Algonquin Rd.	**60195**	**312-397-8777**	**910-689-3346**
INTERNATIONAL					
FRANCE	**Fontenay-aux-Roses**	National Semiconductor 28, Rue de la Redoute Expansion 10000	**92260**	**016608140**	**250956**
GERMANY	**Munich, 21**	National Semiconductor BMGH Elsenheimer StraBe 61/2	**8000**	**089/9-15027**	**52-2772**
ITALY	**Milan**	National Semiconductor SRL Via Solferino, 19	**20121**	**345-2046/7/8/9**	**332835**
JAPAN	**Tokyo**	NS International Inc., Japan 47F Shinjuku Center Bldg. 1-25-1 Nishishinjuku, Shinjuku-ku		**(04) 355-5711**	**232-2015 JSCJ-J**
UNITED KINGDOM	**Bedford**	National Semiconductor Ltd. 301 Harpur Centre Horne Lane	**MK40 ITR UK**	**(0234) 47147**	**826209**

PHIN – PHILIPS GLOEILAMPENFABRIEKEN

Electronic Components and Materials Division
MARKETING COMMUNICATIONS

			Zip Code	Telephone No.	TWX/Telex
Building BA, Eindhoven, Netherlands				**(040) 79 11 11**	**35000**
ARGENTINA	**Buenos Aires (Tablada)**	Fapesa Av. Crovara 2550		**652-7438/7478**	**21243**
AUSTRALIA	**Lane Cove**	Philips Industries Holdings, Ltd. Elcoma Division 67 Mars Road	**2066 N.S.W.**	**427 0888**	**21611**
AUSTRIA	**Wien**	Österreichische Philips Bauelemente Industrie G.m.b.H. Triesterstrasse 64	**A-1101**	**62 91 11**	**131802**
BELGIUM	**Bruxelles**	M.B.L.E. 80 Rue des Deux Gares	**B-1070**	**523 00 00**	**21420**

Continued on next page

PHIN – PHILIPS GLOEILAMPENFABRIEKEN (Cont'd)

PHILIPS

Electronic Components and Materials Division
MARKETING COMMUNICATIONS
Building BA, Eindhoven, Netherlands

			Zip Code	Telephone No.	TWX/Telex
				(040) 723142	35000
BRAZIL	Sao Paulo, SP	Ibrape Av. Brigadeiro Faria Lima	1735	(011) 211-2600	1124354
CANADA	Scarborough (Ontario)	Philips Electronics Ltd. Electron Devices Division 601 Milner Avenue	M1B 1M8	292-5161	65-25103
DENMARK	København NV	Miniwatt A/S Emdrupvej 115A	DK-2400	(01) 69 16 22	15310
FINLAND	Helsinki 10	Oy Philips Ab Elcoma Division Kaivokatu 8	SF-00100	1 72 71	124811
FRANCE	Paris 11	R.T.C. (RTCF)* La Radiotechnique Compelec 130 Avenue Ledru Rollin	F-75540	355-44-99	680495
GERMANY	Hamburg 1	VALVO (VALG)* UB Bauelemente der Philips GmbH Valvo Haus Burchardstrasse 19	D-2	(040) 3296-1	2161891
HONG KONG	Kwai Chung	Philips Hong Kong Ltd. Elcoma Div. 15/F Philips Industrial Bldg. 24-28 Kung Yip Street		12-24 5121	75820
ITALY	Milano	Philips S.p.A. Sezione Elcoma Piazza IV Novembre 3	1-20124	2-6994	3 30262
JAPAN	Tokyo	Nihon Philips Corporation Shuwa Shinagawa Bldg. 26-33 Takanawa, 3-chome Minato-ku	108	(448) 5611	26388 02422205
KOREA	Seoul	Philips Electronics (Korea) Ltd. Philips House-Elcoma Division 260-199 Itaewon-dong Yongsan-ku C.P.O. Box 3680		794-4202	27291
MEXICO	Mexico 6, D.F.	Electronica S.A. de C.V. Varsovia No. 36		533-11-80	1771227
NETHERLANDS	Eindhoven	Philips Nederland B.V. Afd. Elonco Boschdijk 525	5600 PB	(040) 79 33 33	51238

Continued on next page

PHIN – PHILIPS GLOEILAMPENFABRIEKEN (Cont'd)

Electronic Components and Materials Division
MARKETING COMMUNICATIONS
Building BA, Eindhoven, Netherlands

			Zip Code	Telephone No.	TWX/Telex
				(040) 723142	35000
NEW ZEALAND	Auckland (St. Lukes)	Philips Electrical Industries Ltd. Elcoma Division 2 Wagener Place		867119	2312
NORWAY	Oslo 3	Norsk A/S Philips Electronica Sørkedalsveien 6		46 3890	11141
SOUTH AFRICA	Johannesburg (New Doornfontein)	EDAC (Pty.) Ltd. 3rd Fl. Rainer House Upper Railway Rd. & Ove St.	2001	614 - 2362/9	8-3607
SPAIN	Barcelona 7	Copresa S.A. Balmes 22		301 63 12	54666
SWEDEN	Stockholm 27	A.B. Elcoma Lidingovagen 50	S-11584	08/679780	10776
SWITZERLAND	Zurich	Philips A.G. Elcoma Dept. Allmendstrasse 140-142	CH-8027	01/43 22 11	52392
TAIWAN	Taipei	Philips Taiwan Ltd. San Min Bldg., 3rd Floor 57-1 Chung Shan N. Road Section 2 P.O.B. 22978		(02) 5631717	21570
UNITED KINGDOM	London	Mullard Ltd. (MULB*) Mullard House Torrington Place	WC1E 7HD	01-580-6633	264341
UNITED STATES	California (Sunnyvale)	Signetics Corporation (SIC)* 811 E. Arques Ave.	94086	(408) 739-7700	910-339-9203

RTCF – R.T.C. LA RADIOTECHNIQUE - COMPELEC

	Zip Code	Telephone No.	TWX/Telex
130, Avenue Ledru-Rollin, Paris Cedex 11, France	75.540	355-44-99	PHILAMP PARIS 280 746

SIC – SIGNETICS CORPORATION

	Zip Code	Telephone No.	TWX/Telex
811 East Arques Avenue, Post Office Box 409, Sunnyvale, California	94086	408-739-7700	910-339-9220

* Manufacturer Code inside ( ) can be found in Section 27, Manufacturers Code Names & Addresses

SSS - SOLID STATE SCIENTIFIC INC.

			Zip Code	Telephone No.	TWX/Telex
Montgomeryville, Pennsylvania			**18936**	**215-855-8400**	**510-661-7267**
REGIONAL SALES OFFICES					
CALIFORNIA	**Sherman Oaks**	Solid State Scientific, Inc. 15010 Ventura Blvd. Suite 202	**91403**	**213-995-6666**	**910-495-1746**
FLORIDA	**Tampa**	Solid State Scientific, Inc. 200 S. Hoover Blvd.	**33609**	**813-877-3301**	**810-876-9120**
ILLINOIS	**Deerfield**	Solid State Scientific, Inc. 108 Wilmot Road Suite 206	**60015**	**312-948-8840**	**910-692-4022**
PENNSYLVANIA	**Montgomeryville**	Solid State Scientific, Inc. Commerce Dr.	**18936**	**215-364-2025**	**510-661-6864**

SYK – SYNERTEK, INC.

	Zip Code	Telephone No.
3001 Stender Way, Santa Clara, California	**95051**	**408-988-5600**

26. MANUFACTURERS' LOGOS

IN MFR. CODE ORDER

AMI — American Microsystems, Inc.	AMD — Advanced Micro Devices, Inc.	CLI — Control Logic Inc.	EAI — Electronic Arrays, Inc.	EMM — EMM/SEMI Inc.
FERB — Ferranti, Ltd.	FMI — Fujitsu Microelectronics Inc.	FSC — Fairchild Camera & Instrument Corp.	GIC — General Instrument Corp.	HAC — Hughes Aircraft Co.
HAS — Harris Semiconductor	HITJ — Hitachi, Ltd.	ICC — Information Control Corp.	INL — Intersil, Inc.	ITL — Intel Corp.
ITT — ITT Semiconductor Intermetall	RKW — Rockwell International	MATJ — Matsushita Electronics Corp.	MITC — Mitel Semiconductor	MITJ — Mitsubishi Electric Corp.
MMI — Monolithic Memories, Inc.	MOS — Mostek Corp.	MOTA — Motorola Semiconductor Products, Inc.	MTY — MOS Technology Inc.	MULB — Mullard Ltd.
NECE — NEC Electron Inc. NECJ — Nippon Electric Co., Ltd.	NIT — Nitron Inc.	NSC — National Semicon. Corp.	OKIJ — OKI Electric Industry Co., Ltd.	PHIN — N. V. Philips Gloeilampenfabrieken

26. MANUFACTURERS' LOGOS

IN MFR. CODE ORDER

RCA RCA – RCA Corp., Solid State Div.	RTC RTCF – R.T.C. La Radiotechnique-Compelec	RAYTHEON RTN – Raytheon Company	SGS NDD SGAI – SGS-ATES Componenti Elettronici S.p.A.	signetics SIC – Signetics Corp.
SIEMENS (Product Identifier) SIEG – Siemens Aktiengesellschaft, Semiconductor Div.	 SMC – Standard Microsystems Corp.	 SOD – Solitron Devices, Inc.	 SSS – Solid State Scientific, Inc.	 SST – Solid State, Inc.
Supertex inc. STX – Supertex Inc.	Synertek INCORPORATED SYK – Synertek Inc.	THOMSON-CSF DIVISION SEMICONDUCTEURS sescosem THCF – Thomson-CSF	THOMSON-CSF THOMSON-CSF COMPONENTS CORPORATION SEMICONDUCTOR DIVISION THCS – Thomson CSF, Semicon Div.	 TII – Texas Instruments, Inc.
 TOSJ – Toshiba Corp.	TRW TRW – TRW Semiconductors Inc.	 TSC – Teledyne Semiconductor	TUNGSRAM TUNH – Tungsram	VALVO VALG – Valvo GmbH
WESTERN DIGITAL CORPORATION WDC – Western Digital Corp.	WYLE COMPUTER PRODUCTS WLD – Wyle Laboratories Computer Products	Zilog ZIL – Zilog Microcomputers		

27. MANUFACTURERS' CODES NAMES & ADDRESSES

MANUFACTURERS IN ORDER OF D.A.T.A. CODE LETTERS

QPL MFR. DESIG.	FSCM/ NATO No.	D.A.T.A. MFRS.' CODE		
	31471	**AMI**		American Micro-Systems, Inc., 3800 Homestead Rd., Santa Clara, CA 95051
CDWN	34335	**AMD**	*	Advanced Micro Devices, Inc., 901 Thompson Pl., Sunnyvale, CA 94086
		CLI		Control Logic, Inc., Nine Tech Circle, Natick, MA 01760
		DEC	★	Digital Equipment Corp., One Iron Way, Marlborough MA 01752
	33297	**EAI**		Electronic Arrays Inc., 550 E. Middle Field Rd., Mountain View, CA 94043
	54800	**ECV**		Energy Conversion Devices, Inc., 1675 W. Maple Rd., Troy, MI 48084
		EFCF		E.F.C.I.S., B.P. 217, Avenue Des Martyrs, 38019 Grenoble, Cedex, France
		EMM		EMM/SEMI, Inc., 2000 W. 14th St., Tempe, AZ 85281
		FCA	★	Fujitsu America, Inc., 910 Sherwood Dr., Lake Bluff, IL 60044
	K1196	**FERB**	*	Ferranti Ltd., Electronics Dept., Fields New Rd., Chadderton, Oldham OL9 8NP England
		FMI	*	Fujitsu Microelectronics Inc., 2945 Oakmead Dr., Santa Clara, CA 95051
CFJ	07263	**FSC**	*	Fairchild Camera & Instrument Corp., Semicon. Prod. Group, 464 Ellis St., MS 20-1050, Mountain View, CA 94040
CAKK	14936	**GIC**		General Instrument Corp., 600 W. John St., Hicksville, NY 11802
		HAC		Hughes Aircraft Co., 500 Superior Ave., Newport Beach, CA 92663
CDWO	34371	**HAS**		Harris Semiconductor, P.O. Box 883, Melbourne, FL 32901
	S4361	**HITJ**		Hitachi Ltd., Ohte-machi, 1450 Josuihon-Cho, Kolare-Shi, Tokyo, 187, Japan
		ICC		Information Control Corp., 9610 Bellanca Ave., Los Angeles, CA 90045
CDPR	32293	**INL**		Intersil, Inc., 10710 No. Tantau Ave., Cupertino, CA 95014
CECC	34649	**ITL**	*	Intel Corporation, 3065 Bowers Ave. Santa Clara, CA 95051
	D8849	**ITTG**	*	ITT Semiconductors Intermetall, P.O. Box 840, D-7800 Freiburg 1 Br., West Germany
		MATC	★	Matrox Electronic Systems, 5800 Andover Ave., TMR, Quebec, H4T-1H4 Canada
	01619	**MATJ**		Matsushita Electronics Corp., 1 Kotari-Yakemachi, Nagaokakyo, Kyoto 617, Japan
		MITC		Mitel Semiconductor, P.O. Box 13089, Karata, Ottawa, Ontario, Canada K2K 1X3
	90144	**MITJ**		Mitsubishi Electric Corp., Kita-Itami Works, 4-1 Mizuhara, Itami-Shi, Hyogo-Ken, 664, Japan
CECD	50364	**MMI**	*	Monolithic Memories, Inc., 1165 E. Arques Ave., Sunnyvale, CA 94086
	20747	**MON**		Aydin-Monitor, P.O. Box 328, Newton, PA 18940
CEEJ	50088	**MOS**		Mostek Corp., 1215 W. Crosby Dr., Carrollton, TX 75006
CGG	04713	**MOTA**		Motorola Semiconductor Products Inc., 5005 E. McDowell Rd., M370, Phoenix, AZ 85008
	51284	**MTY**		MOS Technology, Inc., Valley Forge Corp., Ctr., 950 Rittenhouse Rd., Norristown, PA 19401
	K8996	**MULB**		Mullard Ltd., Mullard House, Torrington Pl., London WC1E 7HD, England
	S0543	**NECJ**		Nippon Electric Co., Ltd., 1753 Shimonumabe, Nakahara-ky, Kawasaki, Japan
		NECM	*★	NEC Micro Computers, Inc., 173 Worcester Rd., Wellesley, MA 02181
	54335	**NIT**		Nitron, 10420 Bubb Rd., Cupertino, CA 95014

★ New Manufacturers

* See Section 25 for Sales Office Listings

27. MANUFACTURERS' CODES NAMES & ADDRESSES

MANUFACTURERS IN ORDER OF D.A.T.A. CODE LETTERS

QPL MFR. DESIG.	FSCM/ NATO No.	D.A.T.A. MFRS.' CODE		
CCXP	27014	**NSC**	*	National Semiconductor Corp., 2900 Semiconductor Dr.,Santa Clara CA 95051
	S4071	**OKIJ**		OKI Electric Industry Co., Ltd., Electronic Prod. Sec. Intl. Div., 10-3 Shibaura 4-chome, Minato-ku, Tokyo 108, Japan
	H0002	**PHIN**	*	N.V. Philips Gloeilampenfabrieke, Product Div., Elcoma, Bldg. BA Eindhoven, Netherlands
CRC	18714	**RCA**		RCA Corporation, Solid State Div., Route 202, Somerville, NJ 08876
		RKW		Rockwell International Corp., P.O. Box 3669, Anaheim, CA 92803
		RTC		Riehl Time Corp., 53 So. Jefferson Rd., Whippany, NJ 07981
	F0862	**RTCF**	*	R.T.C. LaRadiotechnique-Compelec, 130, Ave. Ledru-Rollin, 75540 Paris Cedex 11, France
CRP	07933	**RTN**		Raytheon Company, 350 Ellis St., Mountain View, CA 94043
	A3500	**SGAI**		SGS-ATES Componenti Elettronici S.p.A., Via C. Olivetti 2, 20041 Agrate Brianza, Milan Italy
CDBK	18324	**SIC**	*	Signetics Corp., 811 E. Arques Ave., Sunnyvale, CA 94086
	D1180	**SIEG**		Siemens Aktiengesellschaft, Balanstrasse 73, D-8000, Munchen 80, West Germany
		SMC		Standard Microsystems Corp., 35 Marcus Blvd., Hauppage, NY 11787
CDCD	22229	**SOD**		Solitron Devices, Inc., 8808 Balboa Ave., San Diego, CA 92123
CECE	31019	**SSS**	*	Solid State Scientific, Inc., Montgomeryville, PA 18936
		SST		Solid State, Inc., 46 Farrand St., Bloomfield, NJ 07003
		STX		Supertex Inc., 1225 Bordeaux Dr., Sunnyvale, CA 94086
	55576	**SYK**	*	Synertek Inc., 3001 Stender Way, Box 552, Santa Clara, CA 95051
		TAI		Toko America, Inc., 5520 W. Touhey Ave., Skoki, IL 60077
	F5602	**THCF**		Thomson CSF, Div. Semiconducteurs SESCOSEM, 50 rue Jean Pierre Timbaud, BP5 92403 Courbevoie, France
		THCS		Thomson CSF, Semiconductor Div., 6660 Variel Ave., P.O. Box 1454, Canoga Park, CA 91304
CGO	01295	**TII**		Texas Instruments, Inc., Inquiry Answering Service, M/S 308, P.O. Box 225012, Dallas TX 75265
		TOSJ		Toshiba Corp., 1 Komukai Toshibacho Saiwai-ku, Kawasaki-City, Kanagawa, Japan
		TRW		TRW-LSI Products, P.O. Box 1125, Redondo Beach, CA 92074
	15818	**TSC**		Teledyne Semiconductor, 1300 Terra Bella Ave., Mountain View, CA 94043
		TUNH		Tungsram, H-1340, Budapest, Hungary
	D2540	**VALG**		Valvo GmbH, P.O. Box 993, D2000, Hamburg, 1, West Germany
	52840	**WDC**		Western Digital Corp., 3128 Red Hill Ave., Box 2180, Newport Beach, CA 92663
	07764	**WLD**		Wyle Laboratories/Computer Products, 3200 Magruder Blvd., Hampton, VA 23666
		ZIL		Zilog Microcomputers, 10340 Bubb Rd., Cupertino, CA 95014

★ New Manufacturers

* See Section 25 for Sales Office Listings

SYMBOLS & CODES

TYPE No. CROSS INDEX & TECHNICAL SECTIONS

△ Indicators of separate manufacturers producing same type number (non-JEDEC) whose characterics are not the same.
\# This manufacturer-identifying symbol (assigned by D.A.T.A.) is an integral part of the type number (in Type No. Cross Index, Technical Data Sections) to avoid the possibility of confusing the device of one manufacturer with the devices of the others.

Example: (simulated information)	Type No.	Manufacturer	Description
	DD31	CCD	Shift Register
	DD31	CLC	RAM
	DD31	ZEL	ROM

\# 1, #2... The modifier is designated by D.A.T.A. to distinguish between type no. designations which give only one type no. but have more than one electrical function or package.
%... (Sect. 4 & 6) Device requires companion device to complete code; see logic drawing.
– PR... Suffix indicates device is a preliminary type.
–RT... Suffix indicates device is a replacement type.

SYMBOLS & CODES COMMON TO ALL TECHNICAL SECTIONS

NOTE: UNLESS OTHERWISE INDICATED, ALL CHARACTERISTICS APPLY OVER THE ENTIRE OPERATING TEMPERATURE RANGE.
§ – % of Rated Supply Voltage (Applies to "1" Level)

LINE NO.
▼ – New Type
♦ – Revised Specification
\# – Manufactured Outside U.S.A.

MAX. OPERATING POWER DISSIPATION
† – Typical
* – Minimum
% – Per bit
♦ – Quiescent power dissipation
☑ – Absolute maximum
∅ – At 25°C
△ – Dissipation per package

INPUT LOGIC LEVEL: MAX. '0'
† – Typical
* – Minimum
% – Output (not Input) value given. (This also applies for value given for '1' level.)
♦ – Bipolar load only; can be adjusted for the MOS load. (Applies for '1' level value, also)
∅ – At 25°C
△ – Value at Max Rated Supply Voltage

MINIMUM OUTPUT SINK CURRENT
† – Typical
\# – Maximum
$ – Minimum output source current
♦ – Minimum output high current
△ – Maximum output leakage current
% – Minimum driving (fanout) current
☑ – Absolute max. rated output current
∅ – At 25°C

OUTLINE DRAWINGS
CY – TO 5-type (non-JEDEC)
CH – Chip Package
FL – Flat package (non-JEDEC)
ML – Molded or encapsulated package not included in other categories.
MO – Standard JEDEC outline
PL – Printed circuit board
TO – Standard JEDEC outline
☑ – Package style only shown; no dimensions.

LOGIC/BLOCK DRAWINGS
A – RAMs
B – ROMs
C – Character Generators
E – Code Converters
F – Shift Registers
Z – Special Devices
§ – Optional Terminal Connections available; consult manufacturer

STRUCTURE CODE

3-LETTER CODE: X X X

TECHNOLOGY
B: Bipolar
H: Hybrid i.e., Bipolar/MOS (MOS characteristics given for 2nd & 3rd letters of code)
M: MOS
T: Thin film

TYPE
A: Amorphous
C: Complementary Symmetry (N+P)
N: N-Channel
P: P-Channel
(MOS Only)
D: DTL
E: ECL
I: IIL
R: RTL
T: TTL
(Bipolar Only)
X: Not applicable or not specified

PROCESS
A: Aluminum Gate
C: Conventional
D: Schottky Process
G: Silicon Gate
I: Ion-Implanted
N: Silicon Nitride
R: RMOS
S: Silicon-On-Sapphire
T: Thick Oxide
X: Not Applicable or Not Specified

SYMBOLS
∅ : Mounted on PC board
☑ : More than one process used; only one is specified.

OPERATING TEMPERATURE CODE

0– 0 up to 10°C	▼ – USED IN NEGATIVE COLUMN TO INDICATE VALUE IS POSITIVE
1– 10 up to 20°C	
2– 20 up to 30°C	
3– 30 up to 40°C	
4– 40 up to 50°C	
5– 50 up to 60°C	
6– 60 up to 70°C	
7– 70 up to 80°C	
8– 80 up to 90°C	
9– 90 up to 100°C	
A– 100up to 110°C	
B– 110 up to 120°C	
C– 120 up to 130°C	
D– 130 up to 140°C	
E– 140 up to 150°C	
F– 150 up to 160°C	
G– 160 up to 170°C	
H– 170 up to 180°C	
J– 180 up to 190°C	
K– 190 up to 200°C	

EXAMPLES OF OPERATING TEMP. RANGE CODE:

5 C

Min. value Lies between	Max. value Lies between
–50°C and –60°C	+120°C and +130°C

OR

1 8

Min. value Lies between	Max. value Lies between
+10°C and +20°C	+80°C and +90°C

2. READ-WRITE MEMORIES (RAMS)

IN ORDER OF (1)No.WORDS(2)No.BITS/WORD (3)MODE(4)STRUCT.(5)MAX ACC.TIME(6)TYPE No.

LINE No.	6 TYPE No.	ORGANIZATION 1 No. WORDS	2 BITS PER WORD	3 MODE	4 STRUCTURE CODE	5 MAX ACCESS TIME (s)	MAX WRITE CYCLE TIME (s)	MAX OPER. POWER DISS. (W)	RATED POWER SUP. SPAN NEG. (V)	POS. (V)	INPUT LOGIC LEVELS MAX '0' (V)	MIN '1' (V)	MIN OUTPUT SINK CURRENT @ OUT (A)	(V)	MIN CLOCK FREQ. (Hz)	OPER. TEMP. RANGE CODE -	+	DRAWINGS LOGIC/ BLOCK	OUTLINE
•	▼	3	4	5	•	7	8	•	10	11	•	13	•	15	16	•		•	•

3 $ – No. of words is variable; types listed on separate lines with D.A.T.A. modifiers (#1, #2, etc.) added to type no.
§ – More than one circuit

4 $ – No. of bits/word variable
△ – Multi-word output
% – 128
* – 256

• **SEE SYMBOLS AND CODES COMMON TO ALL TECHNICAL SECTIONS**

▼ **TYPE NO. SYMBOLS AND CODES AT TOP OF INTERPRETER CARD**

5 LETTER
D – Dynamic
S – Static
P – Pseudo Static
SYMBOL
% – Type can be operated in either mode (dynamic or static); listed on separate lines with D.A.T.A. modifiers (#1, #2, etc.) added to type no.
§ – Multifunction circuit; see circuit diagram

7 † – Typical
* – Minimum
$ – Propogation delay
∅ – At 25°C
♦ – Other than 25°C
☑ – Value at Rated Supply Voltage

8 † – Typical
* – Minimum
$ – Min. write-pulse width
△ – Max. read-write cycle time
∅ – At 25°C
% – Sum of min. write-pulse width and max. write-pulse delay time

NOTE: twc (min) ⟶ @ max value: specified as min or max as indicated by manufacturer. Meaning is identical.

10 11 # – Absolute max.

13 † – Typical
\# – Maximum
△ – Open collector/drain output
§ – Three-state output

15 ♦ – V_{in}

16 † – Typical
\# – Maximum
△ – Max. refresh time (inverted)
∅ – At 25°C
§ – Max refresh time (seconds)
NOTE: This column applies for dynamic (not static) devices.

SYMBOLS & CODES

3. READ ONLY MEMORIES (ROMS)

IN ORDER OF (1)No.WDS(2)No.BITS/WD(3)OP.MODE PRG.CODE(4)STRUCT.(5)MAX ACC.TIME(6)TYPE No.

LINE No.	6 TYPE No.	ORGANIZATION: 1 No. WORDS	2 BITS PER WORD	3 OP MODE PROG CODE	4 STRUCTURE CODE	5 MAX ACCESS TIME (s)	MAX OPER. POWER DISS. (W)	RATED POWER SUP. SPAN NEG. (V)	POS. (V)	INPUT LOGIC LEVELS MAX '0' (V)	MIN '1' (V)	MIN OUTPUT SINK CURRENT (A)	@ OUT (V)	OPER. TEMP. RANGE CODE -	+	GENERAL DESCRIPTION	DRAWINGS LOGIC/ BLOCK	OUTLINE
•	▼	3	4	5	•	7	•	9	10	•	12	•	14	•		17	•	•

3 $ – No. of words is variable; types listed on separate lines with D.A.T.A. modifiers (#1, #2, etc.) added to type no.
§ – More than one circuit

4 $ – No. of bits/word is variable

5
2-LETTER CODE: X X

OPERATING MODE
D: Dynamic (see description column for max. refresh time or min. clock freq.)
S: Static

PROGRAM CODE
C: Mask programmable: custom program
E: Electrically programmable
S: Mask programmable: standard program (see the description column for program).

SYMBOLS
%: Type can be operated in either mode (dynamic or static): listed on separate lines with D.A.T.A. modifiers (#1, # 2, etc.) added to type number; see Cross Index.

7
† – Typical
* – Minimum
$ – Propogation delay
Δ – Cycle time
∅ – At 25°C
♦ – Other than 25°C
☑ – Value at Rated Supply Voltage

9 10 # – Absolute max.

12
† – Typical
# – Maximum
Δ – Open collector/drain output
§ – Three-state output
ϕ – Active Pull-up (Totem Pole)

14 ♦ – V_{in}

17
CS – Chip Select
EAROM – In-circuit Alterable ROM
EPROM – Erasable ROM
fc – Min. clock frequency
FO – Fan Out
KE – Key Encoder
PLA – Programmable Logic Array (see PLA in Sec. 20-Special Memory Devices)
PR – Program
PROM – Fusable Link ROM
Pwr Sw – Power Switched/Power Down Capability
RMM – Read Mostly Memory
Std – Standard
TA – Transistor Array (see TRA in Sec. 20-Special Memory Devices)
TR – Max. refresh time
Vol.– Volatile
UV – Violet Erasable

4. CHARACTER GENERATORS

IN ORDER OF (1)USE CODE(2)No.CHARACTERS (3)No.BITS/CHAR(4)No.OUT(5)STRUCT(6)TYPE No.

LINE No.	6 TYPE No.	1 USE CODE	2 No. CHARACTERS	3 BITS PER CHAR.	4 No. OUTPUTS	5 STRUCTURE CODE	MAX ACCESS TIME (s)	MAX OPER. POWER DISS. (W)	RATED POWER SUP. SPAN NEG. (V)	POS. (V)	INPUT LOGIC LEVELS MAX '0' (V)	MIN '1' (V)	MIN OUTPUT SINK CURRENT (A)	@ OUT (V)	OPER. TEMP. RANGE CODE -	+	DRAWINGS LOGIC/ BLOCK	OUTLINE
•	▼	3	4	5	6	•	8	•	10	11	•	13	•	15	•		•	•

3
3-LETTER CODE X X X

OPERATING MODE
D: Dynamic
S: Static

FONT
A: ASCII
B: Alpha
C: Custom
E: EBCDIC
H: Hollerith (compressed)
N: Numeric
S: Selectric
X: Not specified

DISPLAY
A: Row or Column scan
C: Raster: Column scan
R: Raster: Row scan
S: Segment or dot
T: CRT
X: Not specified

SYMBOLS
§ – Does not scan complete line; scans characters by sections.
☑ – Scans two lines at the same time.
% – Operates in more than one mode; indicated by the addition of D.A.T.A. modifier (#1, #2, etc.) to type number.
$ – Includes Japanese font
∅ – Includes Greek font
Δ – Shifted characters
* – Math symbols
# – Alphanumeric control characters
♦ – Special symbols

4 $ – No. of characters variable; types listed on separate lines with D.A.T.A. modifiers (#1, #2, etc.) added to type number.
☑ – No. shown represents only half of complete code; other half is generated by companion device.

5 $ – No. of bits/character is variable.
☑ – Two devices required to generate complete scan.
§ – No. of bits/character includes shift control.

6 LETTER CODE:
A: 7 x 8 Array

SYMBOLS:
§ : Individual characters scanned by one-half the outputs

8
† – Typical
* – Minimum
$ – Propogation delay
Δ – Cycle time
∅ – At 25°C
♦ – Other than 25°C
☑ – Value at Rated Supply Voltage

10 11 # – Maximum

13
† – Typical
# – Maximum
Δ – Open collector/drain output
§ – Three-state output

15 ♦ – V_{in}

• **SEE SYMBOLS AND CODES COMMON TO ALL TECHNICAL SECTIONS**

▼ **TYPE NO. SYMBOLS AND CODES AT TOP OF FIRST INTERPRETER CARD**

SYMBOLS & CODES

SYMBOLS & CODES COMMON TO ALL TECHNICAL SECTIONS

NOTE: UNLESS OTHERWISE INDICATED, ALL CHARACTERISTICS APPLY OVER THE ENTIRE OPERATING TEMPERATURE RANGE.

LINE NO.
- ▼ – New Type
- ♦ – Revised Specification
- # – Manufactured Outside U.S.A.

OUTLINE DRAWINGS
- CY – TO 5-type (non-JEDEC)
- CH – Chip Package
- FL – Flat package (non-JEDEC)
- ML – Molded or encapsulated package not included in other categories.
- MO – Standard JEDEC outline
- PL – Printed circuit board
- TO – Standard JEDEC outline
- ⍁ – Package style only shown; no dimensions.

MAX. OPERATING POWER DISSIPATION
- † – Typical
- * – Minimum
- % – Per bit
- ♦ – Quiescent power dissipation
- ⍁ – Absolute maximum
- ∅ – At 25°C

INPUT LOGIC LEVEL: MAX. '0'
- † – Typical
- * – Minimum
- % – Output (not Input) value given. (This also applies for value given for '1' level.)
- ♦ – Bipolar load only; can be adjusted for the MOS load. (Applies for '1' level value, also)
- ∅ – At 25°C

MINIMUM OUTPUT SINK CURRENT
- † – Typical
- # – Maximum
- $ – Minimum output source current
- ♦ – Minimum output high current
- Δ – Maximum output leakage current
- % – Minimum driving (fanout) current
- ⍁ – Absolute max. rated output current
- ∅ – At 25°C

LOGIC/BLOCK DRAWINGS
- A – RAMs
- B – ROMs
- C – Character Generators
- E – Code Converters
- F – Shift Registers
- Z – Special Devices
- § – Optional Terminal Connections available; consult manufacturer

STRUCTURE CODE

3-LETTER CODE: X X X

TECHNOLOGY
- B: Bipolar
- H: Hybrid i.e., Bipolar/MOS (MOS characteristics given for 2nd & 3rd letters of code)
- M: MOS
- T: Thin film

TYPE
- A: Amorphous
- C: Complementary Symmetry (N+P)
- N: N-Channel
- P: P-Channel

(MOS Only)
- D: DTL
- E: ECL
- I: IIL
- R: RTL
- T: TTL

(Bipolar Only)
- X: Not applicable or not specified

PROCESS
- A: Aluminum Gate
- C: Conventional
- D: Schottky Process
- G: Silicon Gate
- I: Ion-Implanted
- N: Silicon Nitride
- R: RMOS
- S: Silicon-On-Sapphire
- T: Thick Oxide
- X: Not Applicable or Not Specified

SYMBOLS
- ∅ : Mounted on PC board
- ⍁ : More than one process used; only one is specified.

OPERATING TEMPERATURE CODE
- 0– 0 up to 100°C
- 1– 10 up to 200°C
- 2– 20 up to 300°C
- 3– 30 up to 400°C
- 4– 40 up to 500°C
- 5– 50 up to 600°C
- 6– 60 up to 700°C
- 7– 70 up to 800°C
- 8– 80 up to 900°C
- 9– 90 up to 1000°C
- A– 100up to 1100°C
- B– 110 up to 1200°C
- C– 120 up to 1300°C
- D– 130 up to 1400°C
- E– 140 up to 1500°C
- F– 150 up to 1600°C
- G– 160 up to 1700°C
- H– 170 up to 1800°C
- J– 180 up to 1900°C
- K– 190 up to 2000°C

▼ – USED IN NEGATIVE COLUMN TO INDICATE VALUE IS POSITIVE

EXAMPLES OF OPERATING TEMP. RANGE CODE:

5 C

Min. value	Max. value
Lies between −50°C and −60°C	Lies between +120°C and +130°C

OR

1▼ 8

Min. value	Max. value
Lies between +10°C and +20°C	Lies between +80°C and +90°C

6. CODE CONVERTERS

IN ORDER OF(1)FROM CODE(2)TO CODE(3)No.WORDS (4)No.INPUT BITS(5)No.OUTPUT BITS(6)TYPE No.

LINE No.	6 TYPE No.	CONVERSION CODE 1 FRM	CONVERSION CODE 2 TO	3 No. WORDS	No. CODE BITS 4 IN	No. CODE BITS 5 OUT	MODE	STRUCTURE CODE	MAX ACCESS TIME (s)	MAX OPER. POWER DISS. (W)	RATED POWER SUP. SPAN NEG. (V)	RATED POWER SUP. SPAN POS. (V)	INPUT LOGIC LEVELS MAX '0' (V)	INPUT LOGIC LEVELS MIN '1' (V)	MIN OUTPUT SINK CURRENT (A)	MIN OUTPUT SINK CURRENT @ OUT (V)	OPER. TEMP. RANGE CODE -	OPER. TEMP. RANGE CODE +	DRAWINGS LOGIC/ BLOCK	DRAWINGS OUTLINE
•	▼	3	4	5	6	7	8	•	10	•	12	13	•	15	•	17	•		•	•

3 4 NUMBER:
- 1 – USASCII
- 2 – EBCDIC
- 3 – Selectric
- 4 – BCD
- 5 – Binary
- 6 – Hollerith
- 7 – 96-column
- 8 – Key Encoded
- 9 – Custom
- 10 – Baudot
- 11 – EIA RS244A

SYMBOL: ("From" column)
- % – Device has more than one conversion capability; listed on separate lines.

5
- $ – No. of words is variable; types listed on separate lines with D.A.T.A. modifiers (#1, #2, etc.) added to type no.
- § – More than one circuit
- ♦ – No. of words per separate code conversion
- * – Product of keys x modes for keyboard encoders

Note: Adjacent column (No. Code Bits IN) gives no. of keys.

6 7
- ⍁ – Includes even parity bit
- ∅ – Includes odd parity bit
- § – Includes both odd and even parity bits

8 LETTER
- D – Dynamic
- S – Static

SYMBOL
- % – Type can be operated in either mode (dynamic or static); listed on separate lines with D.A.T.A. modifiers (#1, # 2, etc.) added to type no.

10
- † – Typical
- * – Minimum
- $ – Propogation delay
- Δ – Cycle time
- ∅ – At 25°C
- ♦ – Other than 25°C
- % – Key bounce delay
- ⍁ – Value at Rated Supply Value

12 13 # – Absolute max.

15
- † – Typical
- # – Maximum
- Δ – Open collector/drain Output
- § – Three-state output

17 ♦ – V_{in}

• SEE SYMBOLS AND CODES COMMON TO ALL TECHNICAL SECTIONS

▼ TYPE NO. SYMBOLS AND CODES AT TOP OF INTERPRETER CARD

SYMBOLS & CODES

7. SHIFT REGISTERS

IN ORDER OF(1)No.BITS/REG(2)No.REGISTERS (3)OP.CODE(4)MAX W/C FREQ(5)STRUCT(6)TYPE No

LINE No.	6 TYPE No.	ORGANIZATION 1 BITS PER REGISTER	ORGANIZATION 2 No. REGS	3 OPER. CODE	4 MAX WORST CASE FREQ. (Hz)	5 STRUC TURE CODE	MAX OPER. POWER DISS. (W)	RATED POWER SUP. SPAN NEG. (V)	RATED POWER SUP. SPAN POS. (V)	INPUT LOGIC LEVELS MAX '0' (V)	INPUT LOGIC LEVELS MIN '1' (V)	MAX PROP. DELAY (s)	MIN OUTPUT SINK CURRENT (A)	MIN OUTPUT SINK CURRENT @ OUT (V)	MIN CLOCK FREQ. (Hz)	OPER. TEMP. RANGE CODE	DRAWINGS LOGIC/ BLOCK	DRAWINGS OUTLINE
•	▼	3	4	5	6	•	•	9	10	•	12	13	•	15	16	•	•	•

3 $ – No. of bits/register made variable by internal gating
§ – Individual registers contain different numbers of bits; max. no. is specified (see schematic)
△ – Accumulator
☑ – No. of bits/register made variable by custom programming; max. no. is specified

4 $ – Separate input and/or output is made available for connection to intermediate stages
* – No. of Stages

6 † – Typical
* – Minimum
△ – Max. clock rate
% – Max. toggle freq.
∅ – At 25°C
☑ – Data repetition rate

9 10 # – Absolute max.

5 3-LETTER CODE: X X X

INPUT	OUTPUT	OPERATING MODE
P: Parallel	P: Parallel	D: Dynamic
S: Series	S: Series	S: Static
B: Has both Parallel and Serial Inputs		

SYMBOLS
$ – Chip contains associated circuitry
§ – Multifunction circuit; application depends on external connections
% – Type can be used in either dynamic or static mode; listed on separate lines with D.A.T.A. modifiers (#1, #2, etc.) added to type no. (see Cross Index)
▼ – FIFO Memory (1st In, 1st Out)
* – Device contains additional memory storage (see logic diagram)

12 † – Typical
– Maximum
△ – Open collector/drain output
§ – Three-state output

13 † – Typical
* – Minimum
△ – Transition time
§ – Average propogation delay
∅ – At 25°C
☑ – Read Access Time

15 ♦ – V_{in}

16 † – Typical
– Maximum
△ – Max. refresh time (inverted)
∅ – At 25°C

NOTE: This column applies for dynamic (not static) devices

20. SPECIAL MEMORY DEVICES

IN ORDER OF: (1)FUNCT CODE (2)NO. WORDS (3)BITS/WD (4)OP MODE (5)STRUCT &(6)TYPE NO.

LINE No.	6 TYPE No.	ORGANIZATION 1 FUNCT -ION CODE	ORGANIZATION 2 No. WORDS	ORGANIZATION 3 BITS per WORD	4 OP MODE PROG CODE	5 STRUC -TURE CODE	MAX ACCES TIME (S)	MAX OPER. PWR DISS. (W)	RATED PWR SUPPLY SPAN NEG. (V)	RATED PWR SUPPLY SPAN POS. (V)	INPUT LOGIC LEVELS MAX. '0' (V)	INPUT LOGIC LEVELS MIN. '1' (V)	MIN. OUTPUT SINK CURRENT (A)	OUTPUT OUTPUT VOLT (V)	OUTPUT TEMP. RNG. CODE	GENERAL DESCRIPT -ION	DRAWINGS LOGIC/ BLOCK	DRAWINGS OUT -LINE
•	▼	3	4	5	6	•	8	•	10	11	•	13	•	15	•	18	•	•

3
ATN – Arc Tan
CAM – Content Addressable Memory (CAM)
CCD – Charge-Coupled Device
COS – Cosine
MBM – Magnetic Bubble Memory
MBS – Magnetic Bubble Memory Support
MCT – Memory Controller
MUL – Multipliers
PGA – Programmable Gate Array
PLA – Programmable Logic Array (PLA)
PLS – Programmable Logic Sequencer
PRP – Programmable ROM Patch
PMX – Programmable Multiplexer
QBF – Quick Brown Fox
RYG – Rhythm
SCN – Sine-Cosine
SIN – Sine
TRA – Transistor Array
SYS – Special Memory Systems and Subsystems

NOTE: For PGA's and PLA's the number in the "No. Words" column represents the max. no. of product terms (1 for PGA's); the number in the "Bits per word" column represents the no. of outputs.

For PMX's the number in the "No. Words" column represents the no. of multiplexer inputs; the figure in the "Bits per Word" column represents the no. of outputs.

4 $ – No. of words is variable; types listed on separate lines with D.A.T.A. modifiers (#1, # 2, etc.) added to type no.
§ – More than one circuit
△ – No. of loops (Bubble Mem.)

5 $ – No. of bits/word is variable
△ – No. of bits per loop

6 2–LETTER CODE X X

OPERATING MODE	PROGRAM CODE
D: Dynamic (see description column for max. refresh time or min. clock freq.)	C: Mask programmable: custom program
S: Static	E: Electrically programmable
	S: Mask programmable: standard program (see the description column for program)
	W: Addressable writing

SYMBOLS
% : Type can be operated in either mode (dynamic or static): listed on separate lines with D.A.T.A. modifiers (# 1, # 2, etc.) added to type number; see Cross Index.

8 † – Typical
* – Minimum
$ – Propogation delay
△ – Cycle time
∅ – At 25°C
♦ – Other than 25°C
☑ – Value at Rated Supply Voltage

10 11 # – Absolute max.
△ – Differential coil voltage

13 † – Typical
– Maximum
△ – Open collector/drain output
§ – Three-state output

15 ♦ – V_{in}

18 RAM/ROM – Two mode device (RAM/EAROM)
RHY – Rhythms
VAR – Variable
VOL – Volatile

• **SEE SYMBOLS AND CODES COMMON TO ALL TECHNICAL SECTIONS**

▼ **TYPE NO. SYMBOLS AND CODES AT TOP OF FIRST INTERPRETER CARD**